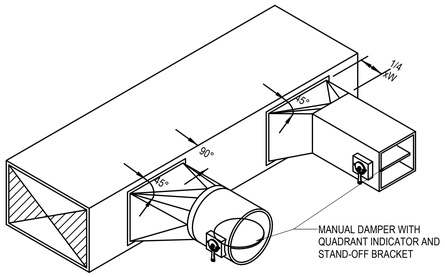

1 DUCT TAKEOFF
NOT TO SCALE

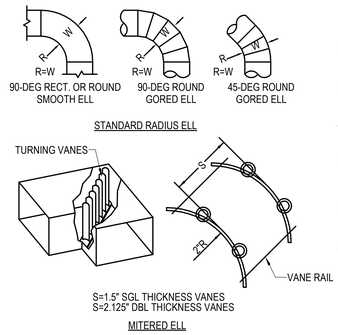

NOTES:
1. WHERE FULL RADIUS TURNS ARE NOT POSSIBLE, MITERED ELL'S WITH TURNING VANES SHALL BE PROVIDED FOR ALL CHANGES IN HORIZONTAL AND VERTICAL DUCT DIRECTION 45-DEGREE OR GREATER.
2. CONSTRUCT ELBOWS IN ACCORDANCE WITH SMACNA HVAC DUCT CONSTRUCTION STANDARDS - METAL AND FLEXIBLE.
3. TURNING VANE ELBOW SHALL BE ASHRAE FITTING CR3-9 WITH SINGLE WIDTH VANES FOR VANE LENGTHS UP TO 24".
4. TURNING VANE ELBOW SHALL BE ASHRAE FITTING CR3-15 WITH DOUBLE WIDTH VANES FOR VANE LENGTHS OVER 24".
5. ROUND ELBOWS SHALL BE SMOOTH OR GORED. 90-DEGREE GORED ELL'S SHALL BE MINIMUM 5-PIECE AND 45-DEGREE GORED ELL'S SHALL BE MINIMUM 3-PIECE.
6. VANES SHALL BE WELDED TO THE VANE RAIL IN DUCT SYSTEMS WITH AIR VELOCITIES 3000 FPM AND HIGHER.
7. SHORT RADIUS ELBOWS, ELBOWS WITH MITERED THROATS/RADIUS HEELS, AND ELBOWS WITH MITERED THROATS/CHAMFERED HEELS ARE NOT ACCEPTABLE.

2 DUCT FITTING - DUCT ELBOW SPEC
NOT TO SCALE

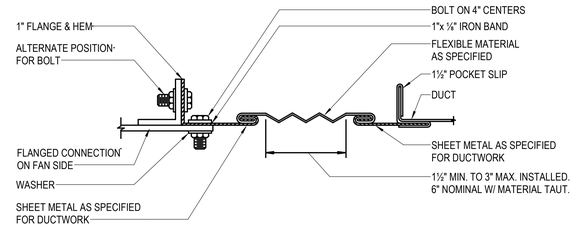

3 DUCT - FLEXIBLE CONNECTION RECTANGUALR
NOT TO SCALE

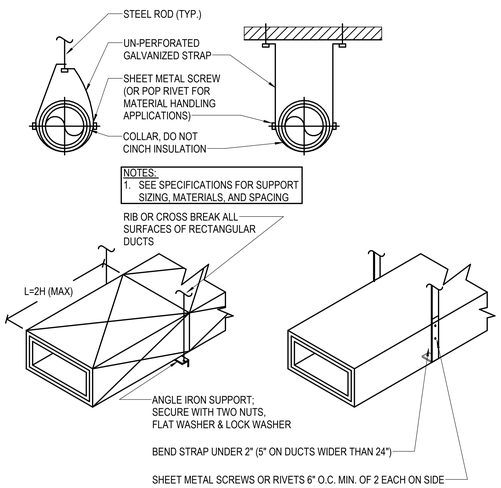

4 DUCT ACCESSORY - DUCT HANGERS
NOT TO SCALE

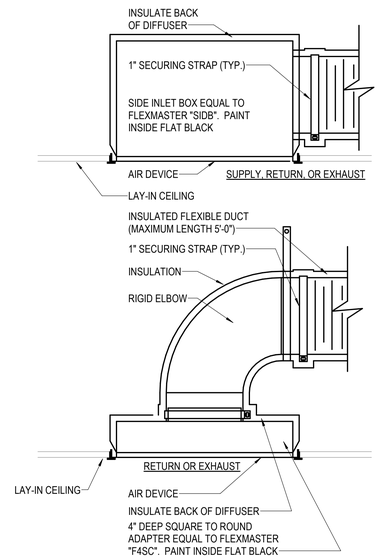

NOTES:
1. FLEX SHALL BE RUN AS STRAIGHT AS POSSIBLE AND CUT TO MINIMUM LENGTH. SWEEPING BENDS TO ACCOMMODATE EXCESS LENGTH ARE NOT ALLOWED. FLEX DUCT SHOULD NOT BE PERMITTED ON RETURN AIR OR EXHAUST AIR SYSTEMS.

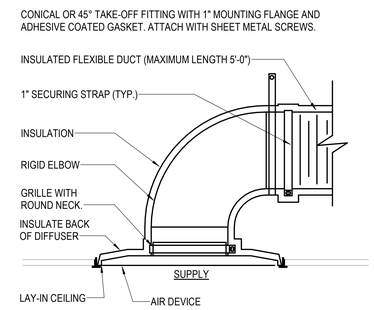

5 AIR TERMINAL - AIR DEVICE CONNECTION
NOT TO SCALE

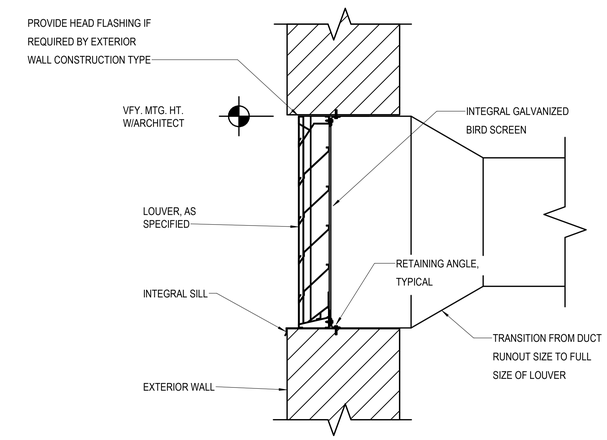

6 LOUVER - STATIC LOUVER
NOT TO SCALE

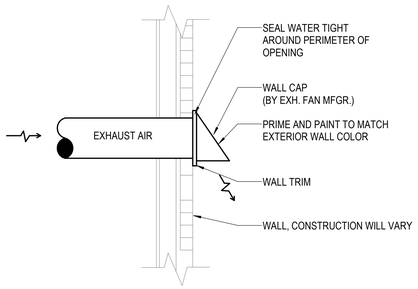

7 DUCT TERMINATION - DUCT WALL CAP
NOT TO SCALE

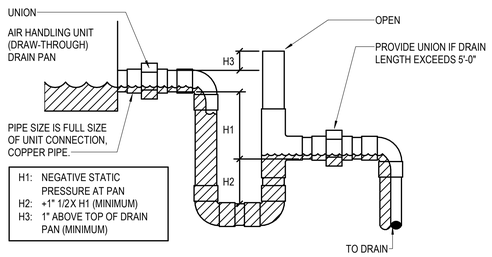

DRAW-THROUGH CONFIGURATION (AHU-1,2,3 & PAHU-1)

8 CONDENSATE PIPING - DRAIN TRAP
NOT TO SCALE

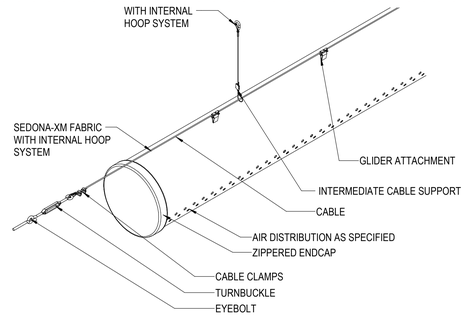

9 FABRIC DUCT SUSPENSION DETAIL
NOT TO SCALE

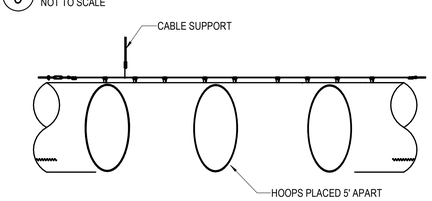

11 INTERNAL HOOP DETAIL
NOT TO SCALE

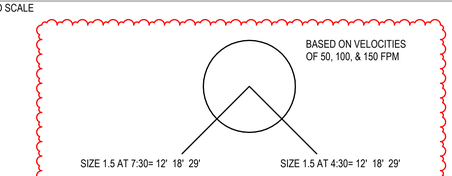

10 DUCTSOX AIR DISPERSION DETAIL
NOT TO SCALE

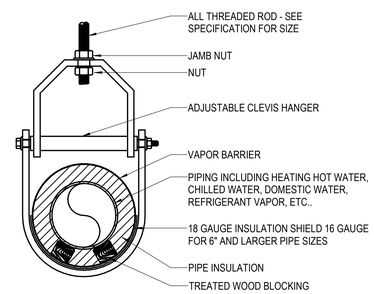

12 PIPE SUPPORT - CLEVIS PIPE HANGER
NOT TO SCALE

CROMWELL
1300 East 6th Street Little Rock, AR 72202
501.372.2900 cromwell.com

Project

MAINTENANCE AND OPERATIONS BUILDING
SHERWOOD
SHERWOOD PUBLIC WORKS
TWO PINES & LANDERS ROAD
SHERWOOD, AR 72117

Design Phase
CONSTRUCTION DOCUMENTS

Revisions

No.	Date	Description
1	11-15-2024	ADD 003

Stamp

CROMWELL ARCHITECTS ENGINEERS #5 CERTIFICATE OF AUTHORIZATION ARKANSAS ENGINEER

STATE OF ARKANSAS REGISTERED PROFESSIONAL ENGINEER No. 22581 JESUS PADILLA
09-23-2024

Notes
1. CROMWELL ARCHITECTS ENGINEERS, INC. ALL RIGHTS RESERVED
2. THIS SHEET DESIGNED FOR COLOR PRINTING. CRITICAL INFORMATION MAY BE LOST WITH BLACK AND WHITE PRINTING.

Project Number 2023-249-20

Issue Date 09-23-2024

Sheet Title
MECHANICAL DETAILS

Sheet Number
M-501-B