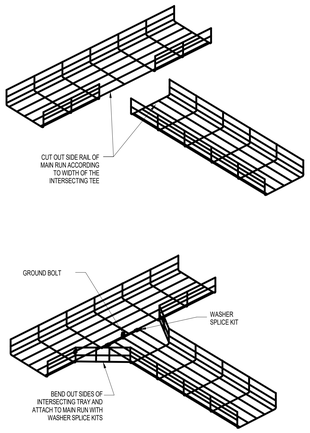

1 **BASKET TRAY TEE**
SCALE : NONE

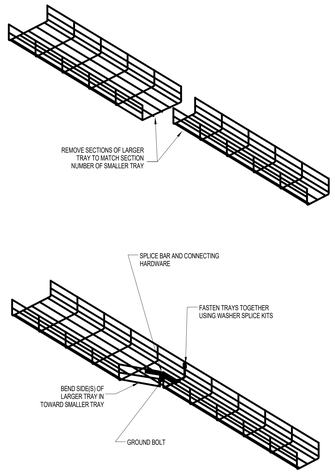

2 **BASKET TRAY REDUCER**
SCALE : NONE

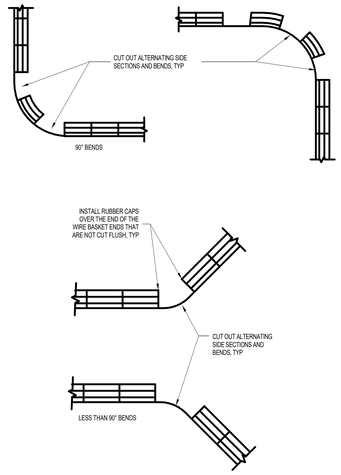

3 **BASKET TRAY VERTICAL BENDS**
SCALE : NONE

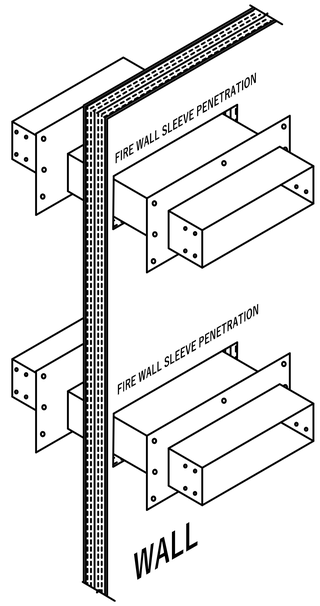

4 **FIRE WALL SLEEVE PENETRATION DETAIL**
SCALE : NONE

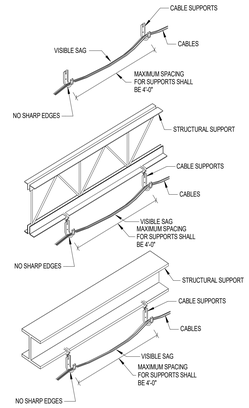

NOTES:
1. TELECOMMUNICATIONS CABLES SHALL NOT BE SUPPORTED FROM DUCTWORK, SPRINKLER PIPING, WATER PIPING, WASTE PIPING, OR ELECTRICAL CONDUIT. TELECOMMUNICATIONS CABLES SHALL NOT BE ROUTED ABOVE STRUCTURAL STEEL.
2. TELECOMMUNICATIONS CABLES SHALL RUN PARALLEL OR AT RIGHT ANGLES TO THE BUILDING STRUCTURE AND SHALL NOT RUN DIAGONALLY ACROSS CEILING SPACE.
3. TELECOMMUNICATIONS SUPPORTS SHALL BE PROPERLY ANCHORED TO BUILDING SUPPORT STRUCTURE.
4. LOCATED THRU-OUT IN LOCATIONS THAT CABLE TRAY IS NOT USED.
5. TELECOMMUNICATIONS CABLES SHALL BE INSTALLED WITH AT LEAST 3" OF CLEAR VERTICAL SPACE ABOVE ANY COMPONENT OF THE SUSPENDED CEILING.
6. TO BE INSTALLED BY ELECTRICAL CONTRACTOR. SEE SPECIFICATIONS FOR ADDITIONAL INFORMATION.

5 **OPEN CABLE SUPPORT DETAIL**
SCALE : NONE

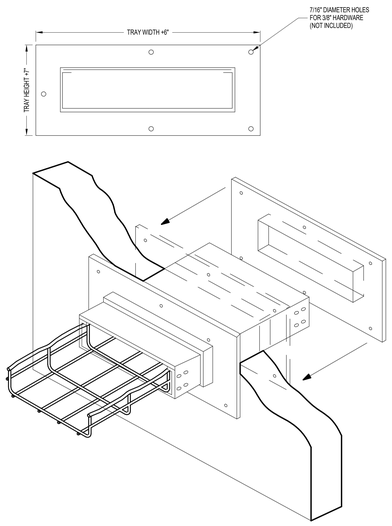

NOTES:
1. INFORMATION PROVIDED DIRECTLY FROM LEGRAND.

6 **FIRE WALL SLEEVE PENTRATION DETAIL**
SCALE : NONE

serverfarm
CORGAN
TGRWA STRUCTURAL ENGINEERS
kW Mission Critical Engineering Member of WSP
EP ENGINEERING PLUS
Kimley»Horn

ISSUES		
1	12/12/2025	SCHEMATIC DESIGN
2	01/23/2026	DESIGN DEVELOPMENT
3		
4		
5		
6		
7		
8		
9		
10		
11		
12		
13		

REVISIONS		
1	01/23/26	ISSUE FOR DD

CORGAN
#1300, 20 N. Orange Ave., Orlando, 32801
214.244.8263
www.corgan.com

Serverfarm - ARK1 - Technology
ISSUE FOR DD
CLARKSVILLE, AR

TECHNOLOGY DETAIL SHEET

JOB 27583
SHEET

T07-12

1/23/2026 8:25:25 PM T07-12 TECHNOLOGY DETAIL SHEET

©2025. Engineering Plus L.L.C. These documents, whether printed or in digital or electronic format, are instruments of service for use solely with respect to this project. Engineering Plus retains all rights including copyrights. To the extent that the documents contain trade secrets and proprietary information, they are confidential and cannot be copied or disseminated to third parties without prior written permission. No license, right to reproduce or use of these documents is granted or implied unless incorporated in a prior written agreement with Engineering Plus L.L.C.