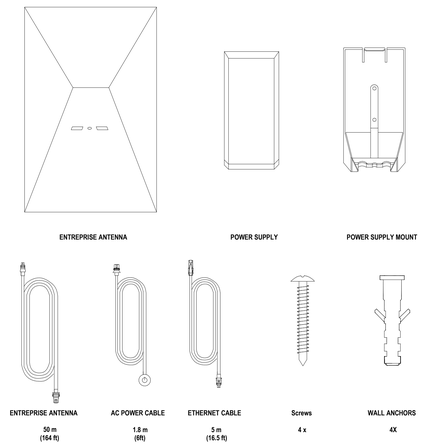

1 STARLINK ENTERPRISE KIT EQUIPMENT
SCALE : NONE

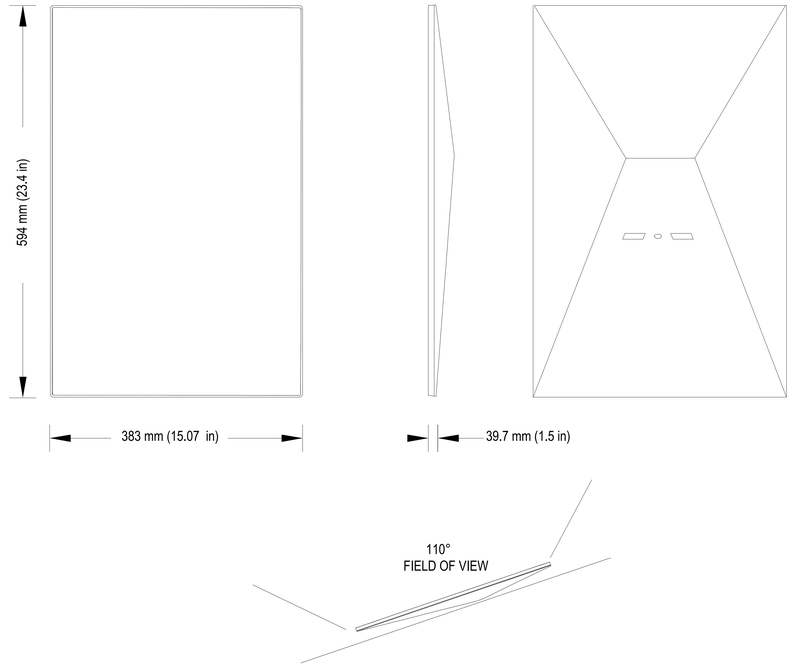

2 STARLINK ENTERPRISE ANTENNA
SCALE : NONE

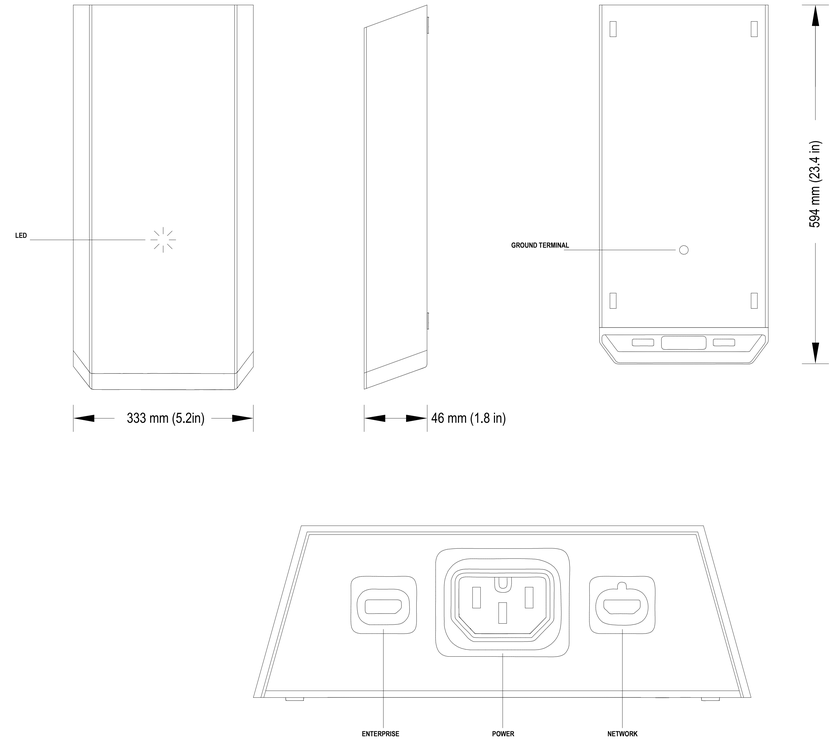

3 STARLINK ENTERPRISE POWER SUPPLY
SCALE : NONE

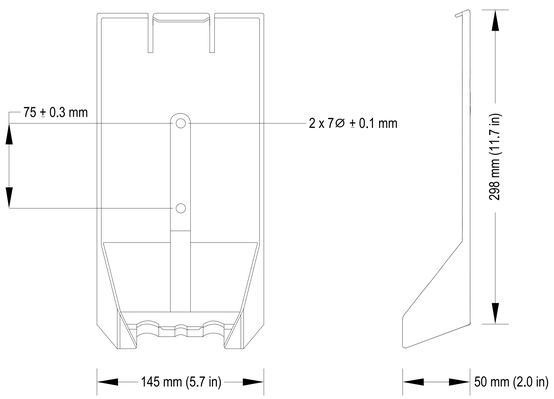

4 STARLINK ENTERPRISE POWER SUPPLY MOUNT
SCALE : NONE

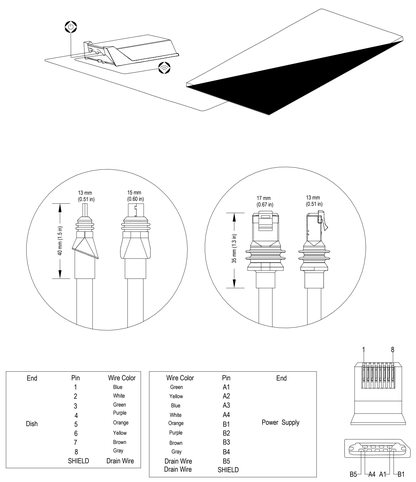

End	Pin	Wire Color
Dish	1	Blue
	2	White
	3	Green
	4	Purple
	5	Orange
	6	Yellow
	7	Brown
	8	Gray
	SHIELD	Drain Wire

Wire Color	Pin	End
Green	A1	Power Supply
Yellow	A2	
Blue	A3	
White	A4	
Orange	B1	
Purple	B2	
Brown	B3	
Gray	B4	
Drain Wire	B5	
Drain Wire	SHIELD	

5 STARLINK ENTERPRISE PROPRIETARY CABLE
SCALE : NONE

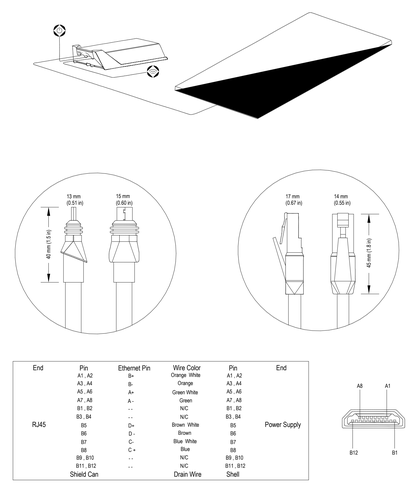

End	Pin	Ethernet Pin	Wire Color	Pin	End
RJ45	A1 , A2	B+	Orange White	A1 , A2	Power Supply
	A3 , A4	B-	Orange	A3 , A4	
	A5 , A6	A+	Green White	A5 , A6	
	A7 , A8	A -	Green	A7 , A8	
	B1 , B2	- -	N/C	B1 , B2	
	B3 , B4	- -	N/C	B3 , B4	
	B5	D+	Brown White	B5	
	B6	D -	Brown	B6	
	B7	C -	Blue White	B7	
	B8	C +	Blue	B8	
	B9 , B10	- -	N/C	B9 , B10	
	B11 , B12	- -	N/C	B11 , B12	
	Shield Can		Drain Wire	Shell	

6 STARLINK ENTERPRISE NETWORK CABLE
SCALE : NONE

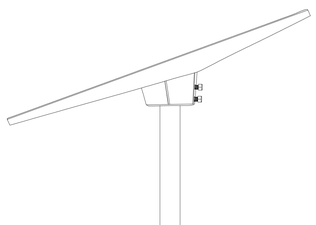

7 STARLINK ENTERPRISE POLE MOUNT
SCALE : NONE

serverfarm
CORGAN
TGRWA STRUCTURAL ENGINEERS
kW Mission Critical Engineering Member of WSP
EP ENGINEERING PLUS
Kimley»Horn

ISSUES		
1	12/12/2025	SCHEMATIC DESIGN
2	01/23/2026	DESIGN DEVELOPMENT
3		
4		
5		
6		
7		
8		
9		
10		
11		
12		
13		

REVISIONS		
1	01/23/26	ISSUE FOR DD

CORGAN
#1300, 20 N. Orange Ave., Orlando, 32801
214.244.8263
www.corgan.com

Serverfarm - ARK1 - Technology
ISSUE FOR DD
CLARKSVILLE, AR

TECHNOLOGY DETAIL SHEET

JOB 27583
SHEET

T07-10

1/23/2026 8:25:24 PM T07-10 TECHNOLOGY DETAIL SHEET

©2025. Engineering Plus L.L.C. These documents, whether printed or in digital or electronic format, are instruments of service for use solely with respect to this project. Engineering Plus retains all rights including copyrights. To the extent that the documents contain trade secrets and proprietary information, they are confidential and cannot be copied or disseminated to third parties without prior written permission. No license, right to reproduce or use of these documents is granted or implied unless incorporated in a prior written agreement with Engineering Plus L.L.C.