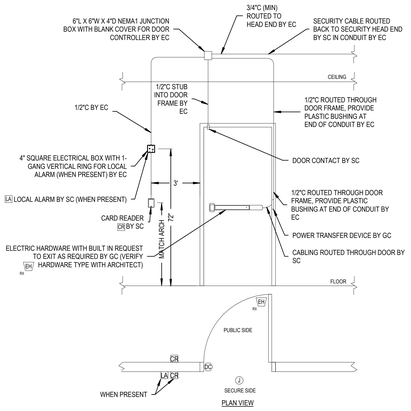

NOTE: INTEGRAL REX SHALL NOT BE WIRED WHEN OUTBOUND LOCAL ALARM AND CARD READER IS PRESENT ON THE SECURE SIDE.

1 SINGLE DOOR W/ ELECTRIC CRASHBAR WALL MOUNTED CARD READER/ ELEVATION

SCALE : NONE

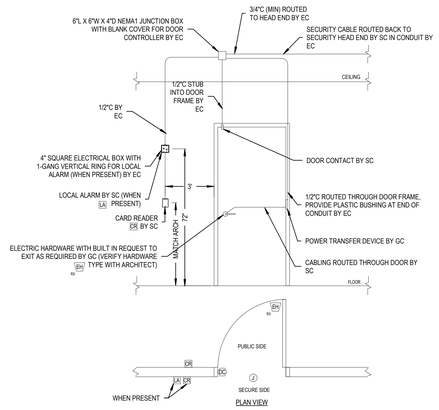

NOTE: INTEGRAL REX SHALL NOT BE WIRED WHEN OUTBOUND LOCAL ALARM AND CARD READER IS PRESENT ON THE SECURE SIDE.

2 SINGLE DOOR W/ ELECTRIC LOCKSET WALL MOUNTED CARD READER/ ELEVATION

SCALE : NONE

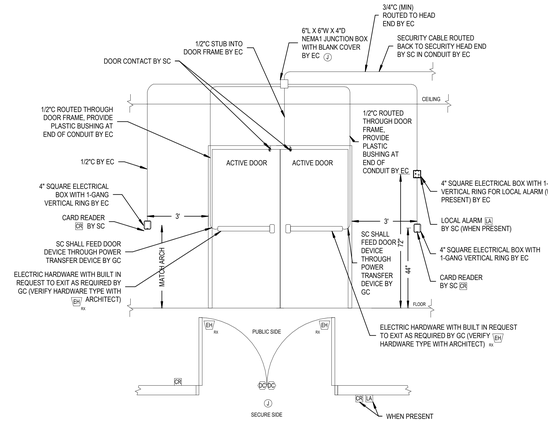

NOTE: INTEGRAL REX SHALL NOT BE WIRED WHEN OUTBOUND LOCAL ALARM AND CARD READER IS PRESENT ON THE SECURE SIDE.

3 DOUBLE DOOR W/ ELECTRIC CRASH BAR WALL MOUNTED CARD READER ELEVATION

SCALE : NONE

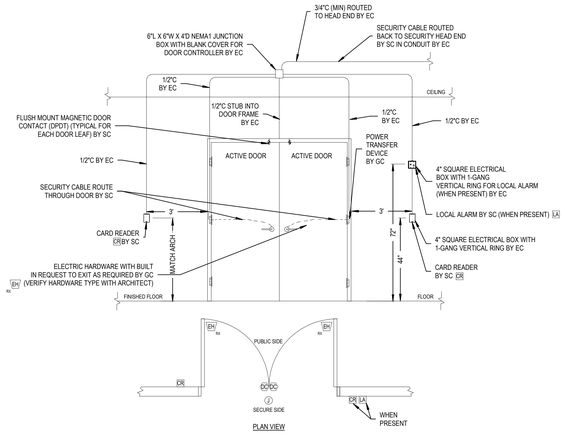

NOTE: INTEGRAL REX SHALL NOT BE WIRED WHEN OUTBOUND LOCAL ALARM AND CARD READER IS PRESENT ON THE SECURE SIDE.

4 DOUBLE DOOR W/ ELECTRIC LOCKSET WALL MOUNTED CARD READER ELEVATION

SCALE : NONE

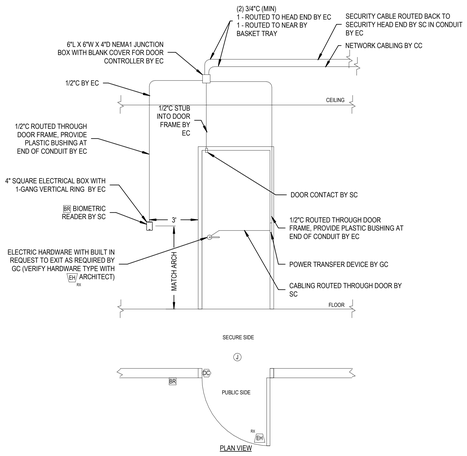

5 SINGLE DOOR W/ ELECTRIC LOCKSET WALL MOUNTED BIOMETRIC READER ELEVATION

SCALE : NONE

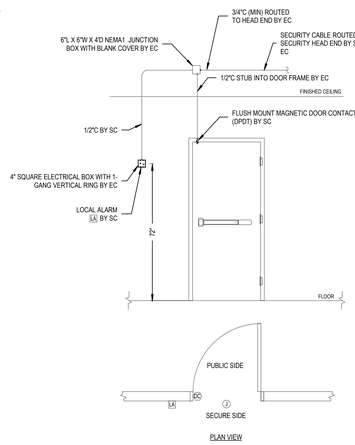

6 SINGLE DOOR LOCAL ALARM ONLY ELEVATION

SCALE : NONE

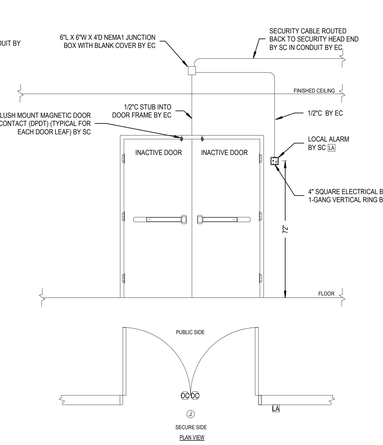

7 DOUBLE DOOR LOCAL ALARM ONLY

SCALE : NONE

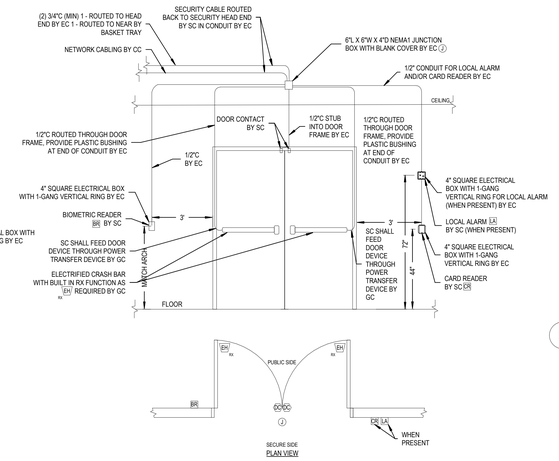

NOTE: INTEGRAL REX SHALL NOT BE WIRED WHEN OUTBOUND LOCAL ALARM AND CARD READER IS PRESENT ON THE SECURE SIDE

8 DOUBLE DOOR W/ ELECTRIC CRASH BAR WALL MOUNTED BIOMETRIC READER ELEVATION

SCALE : NONE

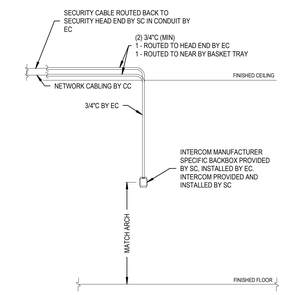

9 WALL MOUNTED INTERCOM DOOR STATION

SCALE : NONE

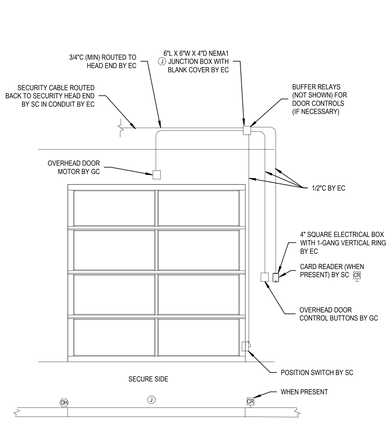

10 OVERHEAD GARAGE DOOR

SCALE : NONE

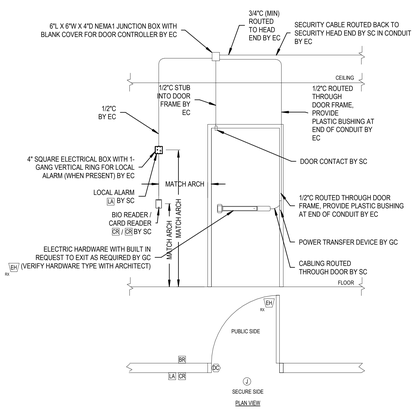

NOTE: INTEGRAL REX SHALL NOT BE WIRED WHEN OUTBOUND LOCAL ALARM AND CARD READER IS PRESENT ON THE SECURE SIDE.

11 SINGLE DOOR W ELECTRIC CRASHBAR WALL MOUNTED BIOMETRIC READER ELEVATION

SCALE : NONE

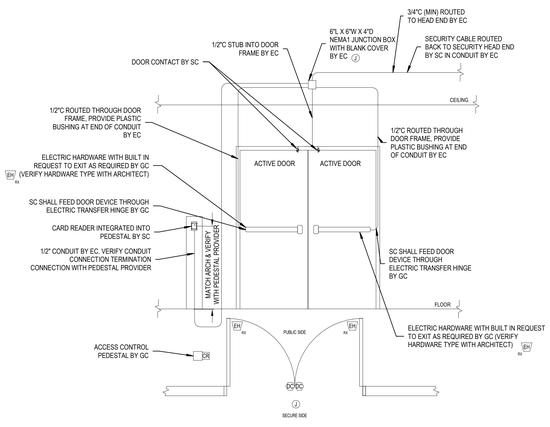

NOTE: INTEGRAL REX SHALL NOT BE WIRED WHEN OUTBOUND LOCAL ALARM AND CARD READER IS PRESENT ON THE SECURE SIDE.

12 DOUBLE DOOR W ELECTRIC CRASH BAR PEDESTAL MOUNTED CARD READER ELEVATION

SCALE : NONE

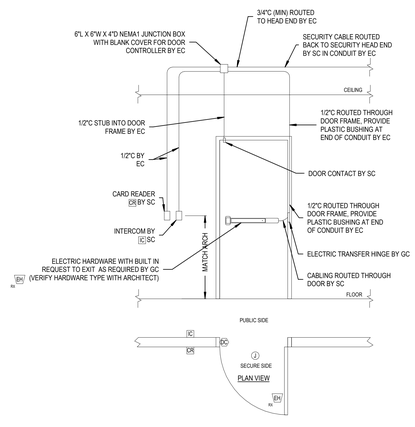

NOTE: INTEGRAL REX SHALL NOT BE WIRED WHEN OUTBOUND LOCAL ALARM AND CARD READER IS PRESENT ON THE SECURE SIDE.

13 SINGLE ROOF DOOR W ELECTRIC CRASHBAR WALL MOUNTED CARD READER & INTERCOM ELEVATION

SCALE : NONE

serverfarm

CORGAN

TGRWA STRUCTURAL ENGINEERS

kW Mission Critical Engineering Member of WSP

EP ENGINEERING PLUS

Kimley»Horn

ISSUES		
1	12/12/2025	SCHEMATIC DESIGN
2	01/23/2026	DESIGN DEVELOPMENT
3		
4		
5		
6		
7		
8		
9		
10		
11		
12		
13		

REVISIONS		
1	01/23/26	ISSUE FOR DD

CORGAN
#1300, 20 N. Orange Ave., Orlando, 32801
214.244.8263
www.corgan.com

Serverfarm - ARK1 - Technology
ISSUE FOR DD
CLARKSVILLE, AR

TECHNOLOGY DETAIL SHEET

JOB 27583
SHEET

T07-07

1/23/2026 8:25:22 PM T07-07 TECHNOLOGY DETAIL SHEET

©2025. Engineering Plus L.L.C. These documents, whether printed or in digital or electronic format, are instruments of service for use solely with respect to this project. Engineering Plus retains all rights including copyrights. To the extent that the documents contain trade secrets and proprietary information, they are confidential and cannot be copied or disseminated to third parties without prior written permission. No license, right to reproduce or use of these documents is granted or implied unless incorporated in a prior written agreement with Engineering Plus L.L.C.