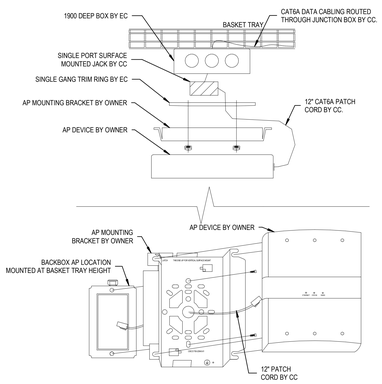

1 **AP MOUNTED TO BASKET TRAY**
SCALE : NONE

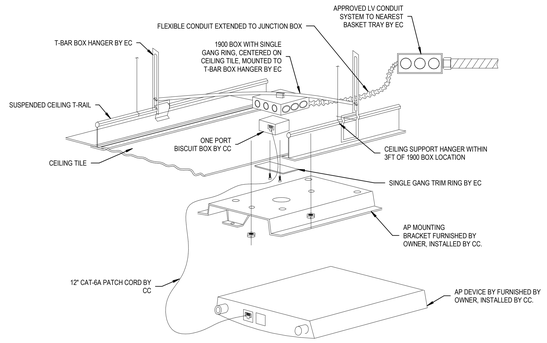

2 **AP BELOW SUSPENDED CEILING MOUNT**
SCALE : NONE

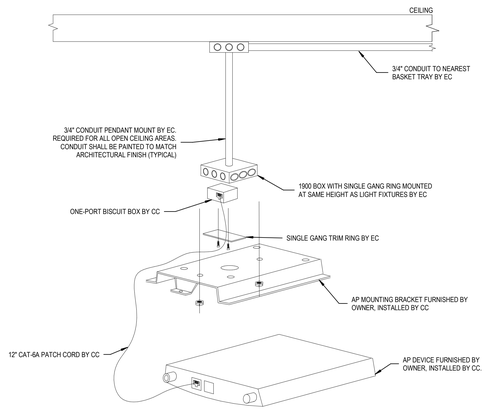

3 **AP MOUNTED IN OPEN CEILING**
SCALE : NONE

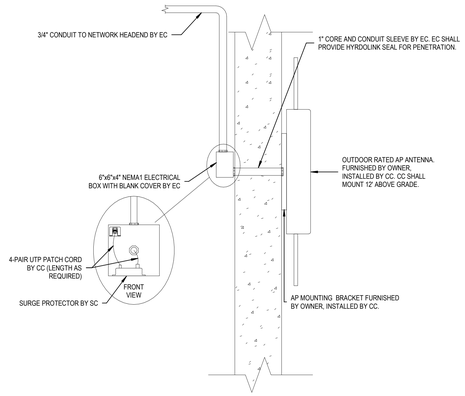

4 **OUTDOOR AP WALL MOUNT DETAIL**
SCALE : NONE

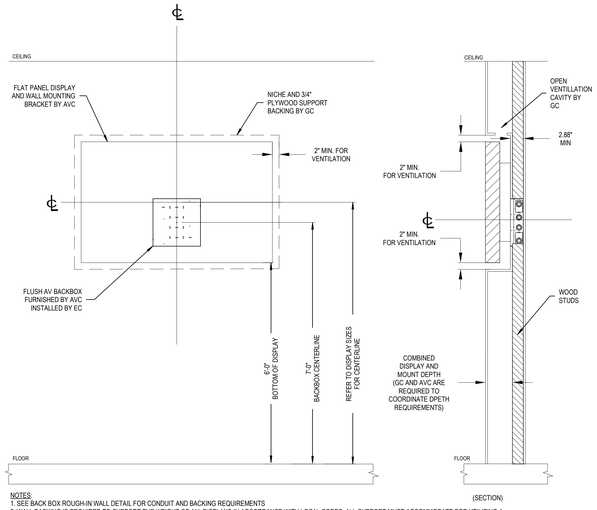

NOTES:
1. SEE BACK BOX ROUGH-IN WALL DETAIL FOR CONDUIT AND BACKING REQUIREMENTS
2. WALL BACKING IS REQUIRED TO SUPPORT THE WEIGHT OF ALL DISPLAYS IN ACCORDANCE WITH LOCAL CODES. ALL SUPPORT MUST ACCOMMODATE FOR UTILIZING A DISPLAY MOUNT THAT ALLOWS FOR UP TO 37" OF EXTENSION FROM THE WALL. AVC SHALL PROVIDE ARTICULATING MOUNT FOR RECESSED INSTALLATION.
3. SEE FLOOR PLANS FOR DISPLAY SIZES AND SPECIAL CONDUIT NOTES. SEE FUNCTION SUMMARY FOR MOUNT TYPE.
4. DISPLAY CENTERLINES ARE TO BE IDENTIFIED BY THE ARCHITECT
5. ** PRIOR TO CONSTRUCTION OF THE NICHE, AVC SHALL SUBMIT FINAL COMBINED HEIGHT, WIDTH, AND DEPTH (INCLUDING MOUNT) OF THE DISPLAY TO THE GC TO COORDINATE FINAL NICHE DIMENSIONS. **
6. A MINIMUM 2" GAP BETWEEN FINISHED NICHE AND DISPLAY EDGE IS RECOMMENDED TO ALLOW FOR SERVICE ACCESS AND PASSIVE HEAT VENTILATION OF DISPLAY.

5 **TYPICAL COMMON AREA DISPLAY WITH RECESSED NICHE ELEVATION**
SCALE : NONE

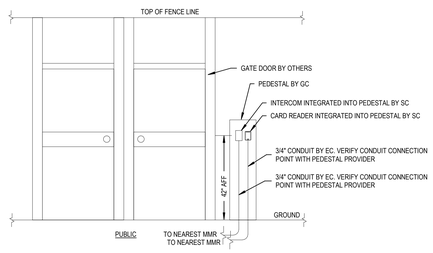

NOTES:
1. SC TO COORDINATE FINAL SECURITY DEVICE LOCATIONS AND INSTALL METHODS WITH GATE CONTRACTOR.
2. GC TO INSTALL SECURITY SCREEN ON GATE/FENCE WHERE NECESSARY TO PREVENT TAMPERING OF ACCESS CONTROL FROM PUBLIC SIDE

6 **DUAL MAN GATE WITH PEDESTAL ELEVATION**
SCALE : NONE

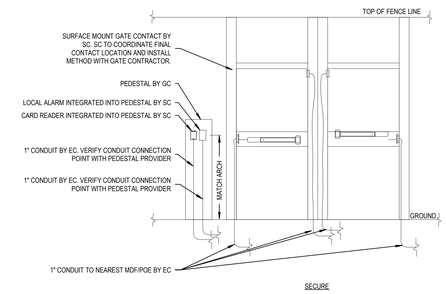

7 **DUAL MAN GATE WITH PEDESTAL (SECURE SIDE) ELEVATION**
SCALE : NONE

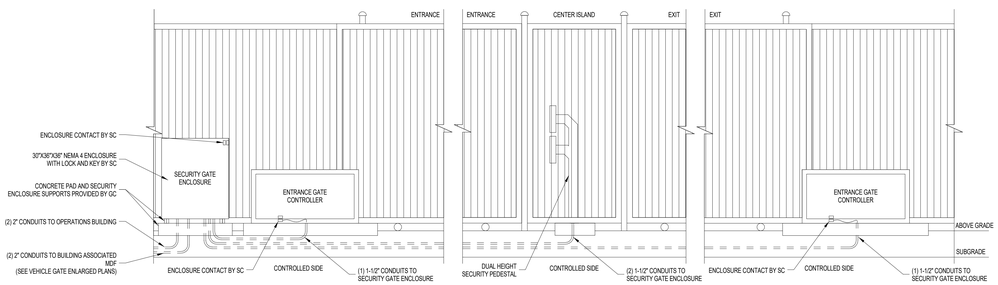

8 **TYPICAL VEHICLE GATE ENCLOSURE INFRASTRUCTURE DETAIL**
SCALE : NONE

serverfarm
CORGAN
TGRWA STRUCTURAL ENGINEERS
kW Mission Critical Engineering Member of WSP
EP ENGINEERING PLUS
Kimley»Horn

ISSUES		
1	12/12/2025	SCHEMATIC DESIGN
2	01/23/2026	DESIGN DEVELOPMENT
3		
4		
5		
6		
7		
8		
9		
10		
11		
12		
13		

REVISIONS		
1	01/23/26	ISSUE FOR DD

CORGAN
#1300, 20 N. Orange Ave., Orlando, 32801
214.244.8263
www.corgan.com

Serverfarm - ARK1 - Technology
ISSUE FOR DD
CLARKSVILLE, AR

TECHNOLOGY DETAIL SHEET

JOB 27583
SHEET

T07-05

1/23/2026 8:25:20 PM T07-05 TECHNOLOGY DETAIL SHEET

©2025, Engineering Plus L.L.C. These documents, whether printed or in digital or electronic format, are instruments of service for use solely with respect to this project. Engineering Plus retains all rights including copyrights. To the extent that the documents contain trade secrets and proprietary information, they are confidential and cannot be copied or disseminated to third parties without prior written permission. No license, right to reproduce or use of these documents is granted or implied unless incorporated in a prior written agreement with Engineering Plus L.L.C.