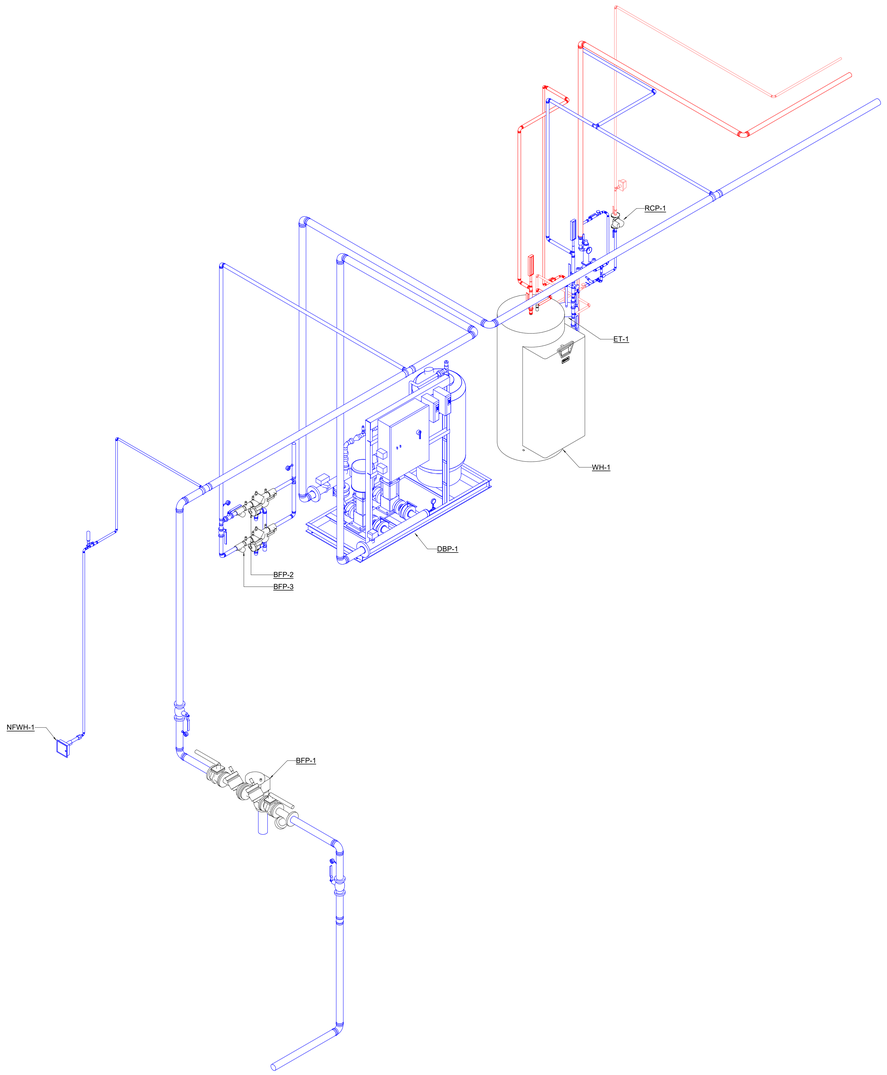


7 3D DOMESTIC WATER ENTRY ROOM - ENLARGED RISER DIAGRAM

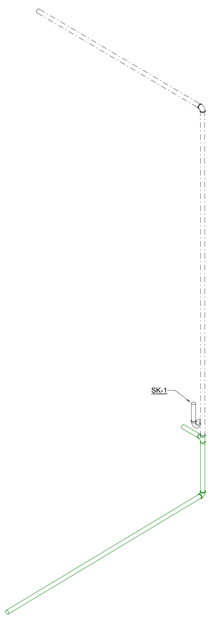


6 3D SANITARY MICRO-KITCHEN - ENLARGED RISER DIAGRAM

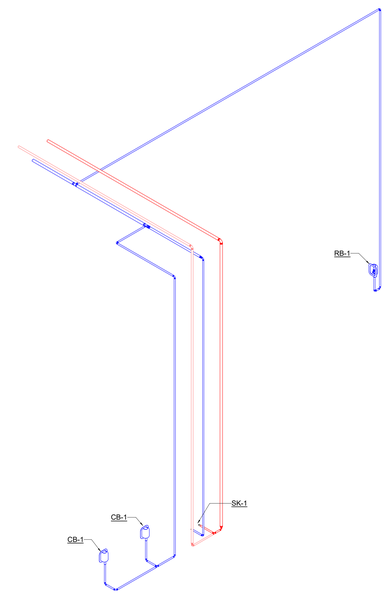


5 3D DOMESTIC MICRO-KITCHEN - ENLARGED RISER DIAGRAM

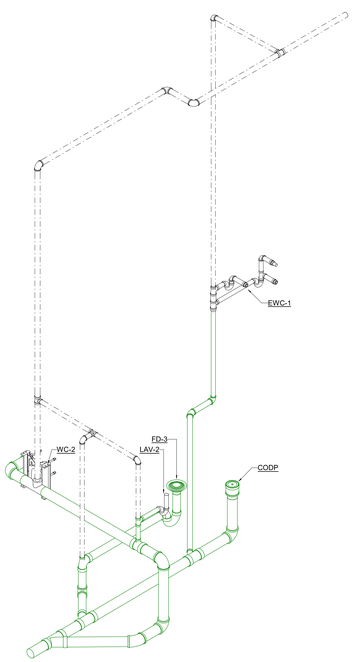


4 3D SANITARY SEGMENT A RR - ENLARGED RISER DIAGRAM

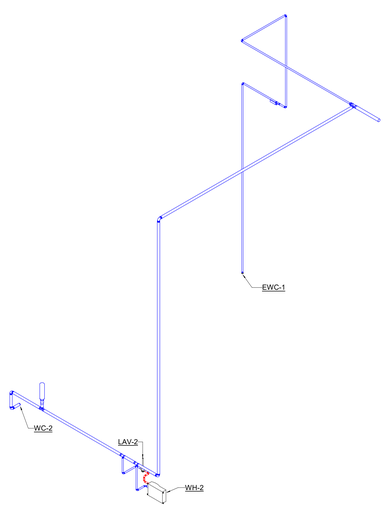


3 3D DOMESTIC SEGMENT A RR - ENLARGED RISER DIAGRAM

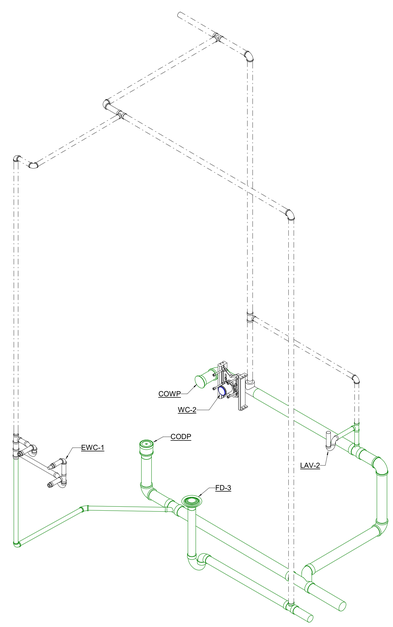


2 3D SANITARY SEGMENT B RR - ENLARGED RISER DIAGRAM

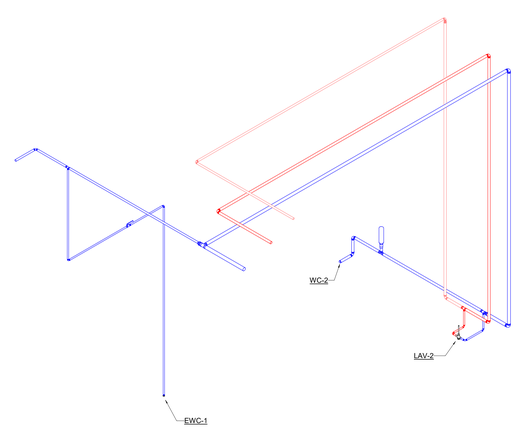


1 3D DOMESTIC SEGMENT B RR - ENLARGED RISER DIAGRAM

serverfarm
CORGAN
TGRWA
STRUCTURAL ENGINEERS
kW Mission Critical Engineering
Member of WSP
EP ENGINEERING PLUS
Kimley»Horn

| | ISSUES | |
|---|---|---|
| 1 | 12.12.2025 | 30% SCHEMATIC DESIGN |
| 2 | 01.23.2026 | 60% DESIGN DEVELOPMENT |

| | REVISIONS | |
|---|---|---|


kW Mission Critical Engineering
Contact: Kyle Jenkins Phone: 518.268.2841
Engineer:
License #: Exp. Date:


NOT FOR CONSTRUCTION

Date of Issue:
01/23/2026

SF - ARK01
DESIGN DEVELOPMENT

Clarksville, AR 72830

ENLARGED PLUMBING RISER DIAGRAMS

**JOB** US0049903.5614
**SHEET**

P04-08

1/23/2026 3:25:58 PM P04-08 ENLARGED PLUMBING RISER DIAGRAMS