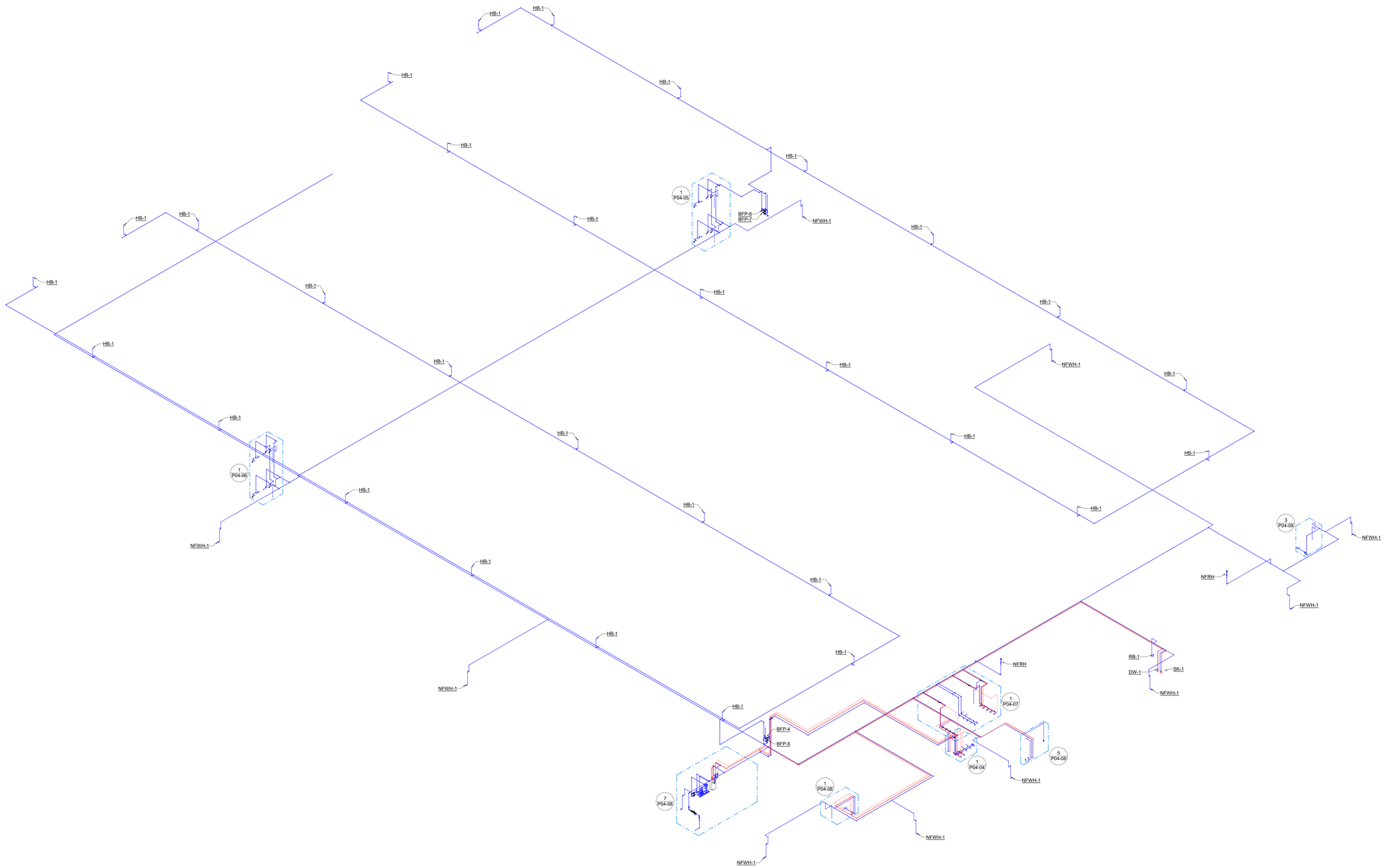

1 3D DOMESTIC RISER DIAGRAM - OVERALL

serverfarm

CORGAN

TGRWA
STRUCTURAL ENGINEERS

kW Mission Critical Engineering
Member of WSP

EP ENGINEERING PLUS

Kimley»Horn

ISSUES		
1	12.12.2025	30% SCHEMATIC DESIGN
2	01.23.2026	60% DESIGN DEVELOPMENT

REVISIONS		

kW Mission Critical Engineering
Contact: Kyle Jenkins Phone: 518.268.2841
Engineer:
License #: Exp. Date:

NOT FOR CONSTRUCTION

Date of Issue:
01/23/2026

SF - ARK01
DESIGN DEVELOPMENT

Clarksville, AR 72830

DOMESTIC RISER DIAGRAMS

JOB US0049903.5614
SHEET

P04-01

1/23/2026 3:25:47 PM P04-01 DOMESTIC RISER DIAGRAMS