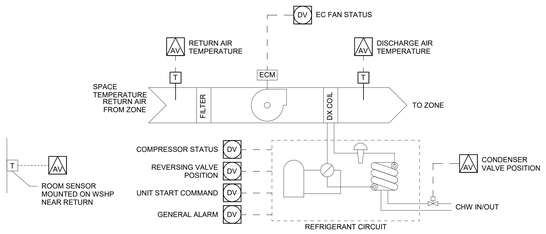

DETAIL NOTES:

1. SEE MECHANICAL SCHEDULES FOR QUANTITIES AND LOCATIONS.
2. POINTS SHOWN ARE FOR REFERENCE ONLY. REFER TO POINTS LIST FOR ADDITIONAL POINTS.

3 WATER SOURCE HEAT PUMP CONTROLS DETAIL
N.T.S.

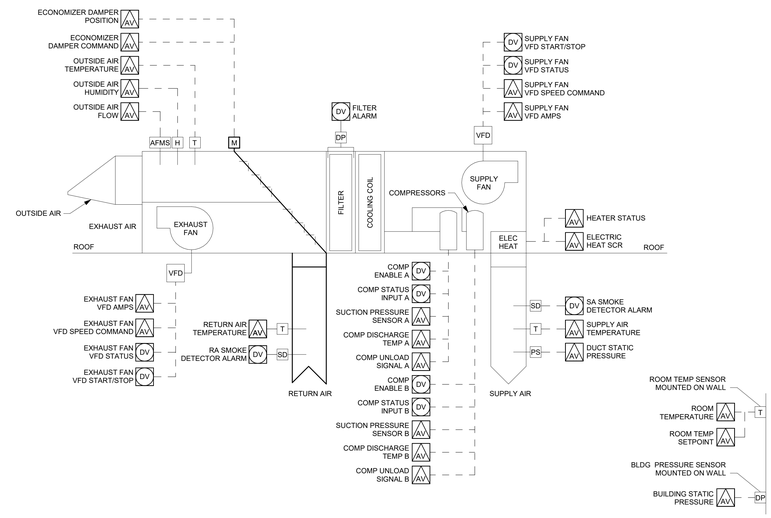

DETAIL NOTES:

1. SEE MECHANICAL SCHEDULES FOR QUANTITIES AND LOCATIONS.
2. POINTS SHOWN ARE FOR REFERENCE ONLY. REFER TO POINTS LIST FOR ADDITIONAL POINTS.

2 ROOF TOP UNIT CONTROLS DETAIL
N.T.S.

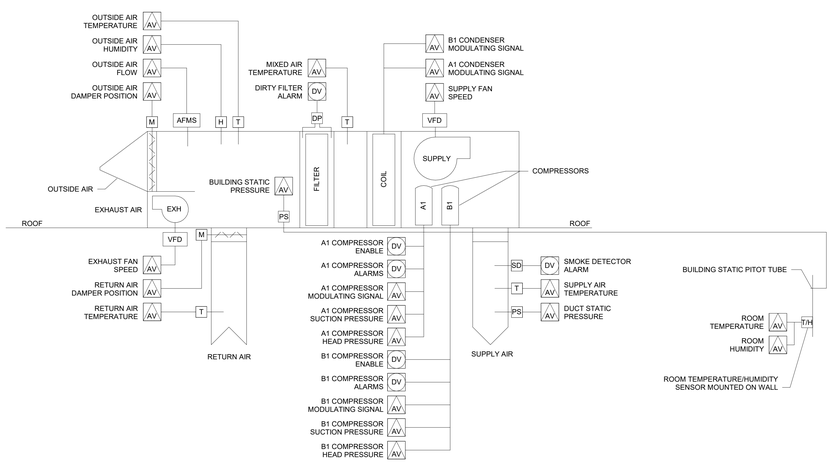

DETAIL NOTES:

1. SEE MECHANICAL SCHEDULES FOR QUANTITIES AND LOCATIONS.
2. POINTS SHOWN ARE FOR REFERENCE ONLY. REFER TO POINTS LIST FOR ADDITIONAL POINTS.

1 MAKE-UP AIR UNIT CONTROLS DETAIL
NTS

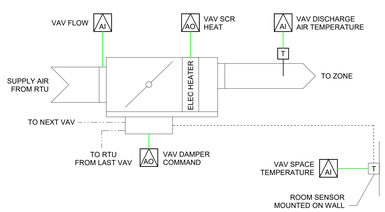

DETAIL NOTES:

1. SEE MECHANICAL SCHEDULES FOR QUANTITIES AND LOCATIONS.
2. POINTS SHOWN ARE FOR REFERENCE ONLY. REFER TO POINTS LIST FOR ADDITIONAL POINTS.

5 VAV W/ ELECTRIC HEAT CONTROLS DETAIL
NTS

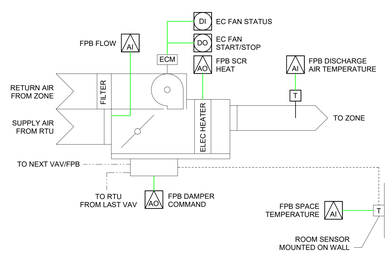

DETAIL NOTES:

1. SEE MECHANICAL SCHEDULES FOR QUANTITIES AND LOCATIONS.
2. POINTS SHOWN ARE FOR REFERENCE ONLY. REFER TO POINTS LIST FOR ADDITIONAL POINTS.

4 FAN POWERED TERMINAL UNIT CONTROLS DETAIL1
N.T.S.

WIRING LEGEND:

- ETHERNET
- SINGLE-MODE FIBER LC/LC CONNECTORS
- RS485 COMMUNICATION INTERLOCK
- HARDWIRED INTERLOCK
- INTERLOCK WIRING BY CONTROLS CONTRACTOR
- MANUFACTURER INTERLOCK
- 120VAC WIRING BY OTHERS INTERLOCK

serverfarm
CORGAN
TGRWA STRUCTURAL ENGINEERS
kW Mission Critical Engineering Member of WSP
EP ENGINEERING PLUS
Kimley»Horn

ISSUES

REVISIONS

kW Mission Critical Engineering
Contact: Alex Tate Phone: 404.829.8031
Engineer:
License #: Exp. Date:

NOT FOR CONSTRUCTION

Date: 01/23/2026

SF - ARK01
DESIGN DEVELOPMENT
CLARKSVILLE, AR 72830

CONTROLS DETAILS

JOB US0049903.5614
SHEET

IC05-03

1/23/2026 3:56:54 PM IC05-03 CONTROLS DETAILS