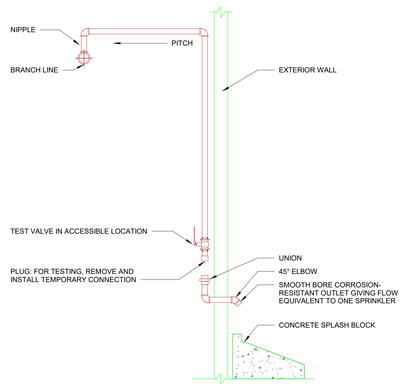

NOTE:

1. TO MINIMIZE CONDENSATION OF WATER IN THE DROP TO THE TEST CONNECTION, PROVIDE A NIPPLE-UP OFF BRANCH LINE.

9 SYSTEM TEST CONNECTION DETAIL
NTS

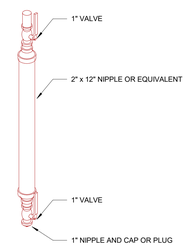

6 DRY SYSTEM AUXILIARY DRAIN
NTS

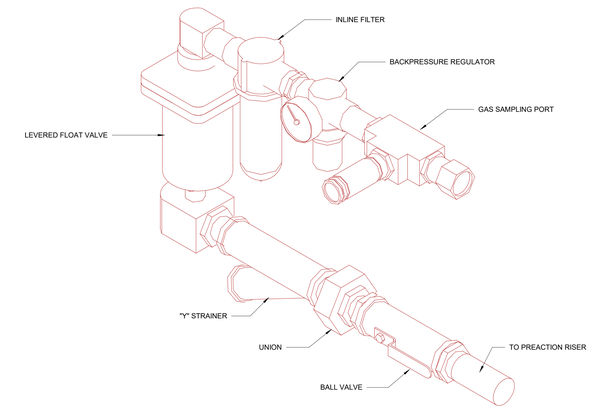

3 SMART VENT DETAIL
NTS

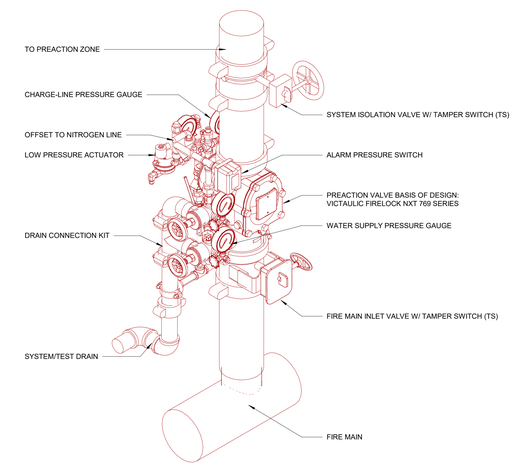

RELEASE SYSTEM PREACTION VALVE DETAIL
SYSTEM COMPONENTS AN INTEGRATED DOUBLE INTERLOCKED, SUPERVISED PREACTION SYSTEM USING A DELUGE VALVE CONTROLLED BY AN ELECTRIC-PNEUMATIC SEQUENCE. SOLENOID VALVE SHALL NOT BE ENERGIZED UNTIL THE FIRE ALARM SYSTEMS RECEIVE BOTH THE APPROPRIATE DETECTION SEQUENCE AND LOSS OF SUPERVISORY AIR.

2 DOUBLE-INTERLOCK PREACTION VALVE DETAIL
NTS

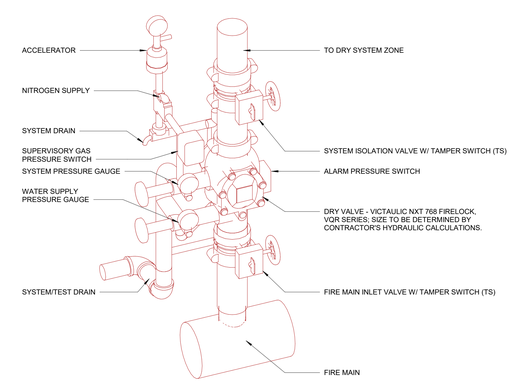

5 DRY PIPE VALVE DETAIL
NTS

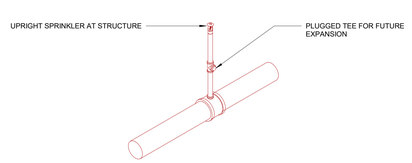

NOTES:

1. SPRINKLER OUTLETS SHALL INCLUDE A TEE WITH SIDE PLUGGED OUTLET TO ACCOMMODATE A FUTURE ARMOVER TO CEILING SPRINKLER.

8 UPRIGHT SPRINKLER DETAIL
NTS

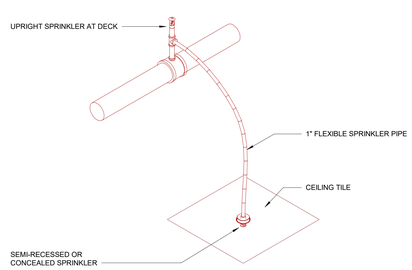

NOTES:

1. FOR PREACTION SYSTEMS IN AREAS HAVING CEILINGS, PROVIDE FLEXIBLE PENDENT SPRINKLER TO FACILITATE DRAWING OF SYSTEM WITHOUT REMOVAL OF EACH HEAD.
2. FLEXIBLE SPRINKLERS SHALL BE INSTALLED PER MANUFACTURER'S INSTRUCTIONS. INSTALL FLEXIBLE SPRINKLERS WITH ADEQUATE SLACK TO ACCOMMODATE SPRINKLER RELOCATION BY ONE CEILING TILE.

7 FLEXIBLE PENDENT SPRINKLER W/ UPRIGHT DETAIL
NTS

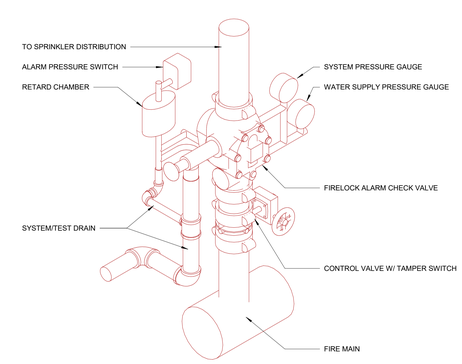

4 ALARM CHECK VALVE DETAIL
NTS

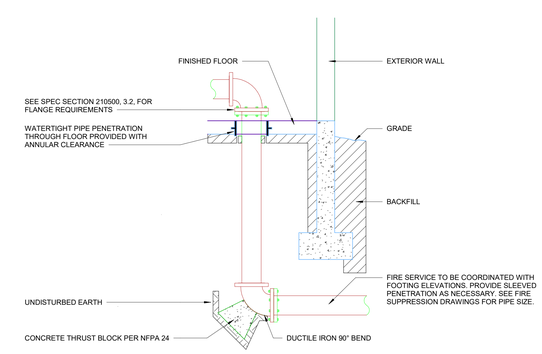

1 FIRE SERVICE ENTRANCE SUPPORT DETAIL
NTS

DEFERRED SUBMITTAL ALL WORK SHOWN IS TO ILLUSTRATE DESIGN INTENT

serverfarm
CORGAN
TGRWA STRUCTURAL ENGINEERS
kW Mission Critical Engineering Member of WSP
EP ENGINEERING PLUS
Kimley»Horn

ISSUES

3	01.23.2026	60% DESIGN DELIVERABLE

REVISIONS

kW Mission Critical Engineering
Contact: Stephan Slabicky Phone: 212.951.3943
Engineer:
License #: Exp. Date:

NOT FOR CONSTRUCTION

Date: 00/00/0000

SERVERFARM

Clarksville, AR

L	K	J	
G	E	C	A
H	F	D	B
P	N	M	

FIRE SUPPRESSION DETAILS

JOB US0049903.5614
SHEET

FP05-01

1/23/2026 3:57:23 PM FP05-01 FIRE SUPPRESSION DETAILS