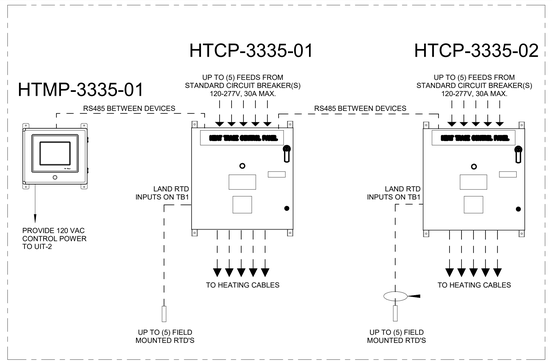

NOTES:

1. RS485 CONNECTION BETWEEN PCM PANELS IS THE RESPONSIBILITY OF THE MECHANICAL CONTRACTOR.
2. INSTALLATION OF THE RS485 BETWEEN PANELS MUST BE INSTALLED PER DIVISION 26 SPECIFICATIONS.
3. PROVIDE A UPS POWER FEED TO THE UIT (HTMP) PANEL.
4. HEAT TRACE CONTROL PANELS SHALL BE PROVIDED WITH BOXE LARGE ENOUGH TO ALLOW FOR BOTTOM CONNECTIONS.

11 HEAT TRACE PANEL DETAIL
NOT TO SCALE

1. WEATHERPROOF JACKET
2. THERMAL INSULATION
3. METALLIC PIPE
4. HEATING CABLE. SELF REGULATING, CONSTANT WATTAGE, MINERAL INSUALTED.
5. TAPE OR BANDING

NOTE:

CABLE LOCATED AT NOMINAL 45° BELOW HORIZONTAL CENTERLINE.

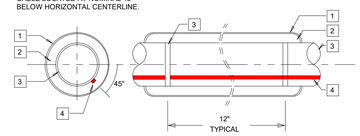

7 HEAT TRACE - PIPE HEATING CABLE INSTALLATION DETAIL
N.T.S.

1. WEATHERPROOF JACKET
2. THERMAL INSULATION
3. METALLIC PIPE
4. HEATING CABLE. SELF REGULATING, CONSTANT WATTAGE, MINERAL INSUALTED.
5. TAPE OR BANDING

NOTE:

HEATING CABLE IS APPLIED TO THE OUTSIDE(LONG) RADIUS OF THE PIPE ELBOW.

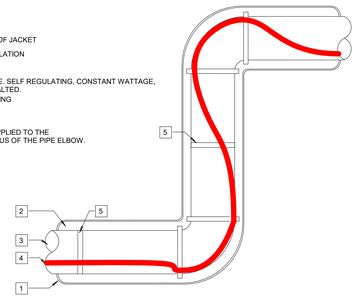

5 HEAT TRACE - PIPE ELBOW HEATING CABLE INSTALLATION DETAIL
N.T.S.

1. METALLIC PIPE
2. TAPE OR BANDING
3. SHUT OFF VALVE
4. HEATING CABLE. SELF REGULATING, CONSTANT WATTAGE, MINERAL INSULATED.
5. CONTINUES TO GAUGE OR DRAIN

NOTES:

COMPLETELY INSULATE AND WEATHERSEAL LINE. ALL PIPING MUST BE FULLY INSULATED AND WEATHERSEALED.

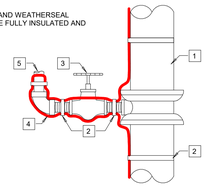

2 HEAT TRACE - GAUGE AND DRAIN HEATING CABLE INSTALLATION DETAIL
N.T.S.

1. WALL
2. HEAVY DUTY 16 GAUGE ZINC COATED STEEL CABINET
3. FIELD CONFIGURABLE AIR GRILLES
4. REMOVABLE FRONT DOOR FOR ACCESS TO CONTROL PANEL, HEATING ELEMENTSS, MOTOR-BLOWER ASSEMBLY, FILTERS, AND OTHER INTERNAL COMPONENTS.

NOTES:

1. THERMOSTAT TO BE UNIT MOUNTED UNLESS NOTED OTHERWISE.

2. PROVIDE MINIMUM CLEARANCES RECOMMENDED BY MANUFACTURER AND AS REQUIRED BY NEC. REFER TO DETAIL #1 ON SHEET M05-06 FOR MANUFACTURER MOUNTING RECOMMENDATIONS.

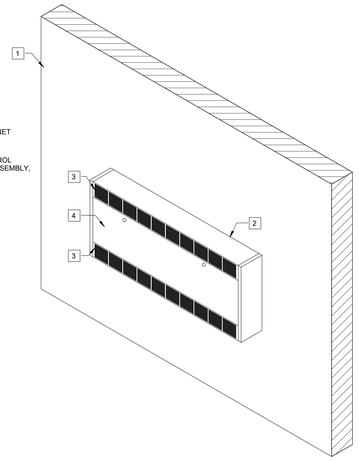

6 CABINET HEATER DETAIL
N.T.S.

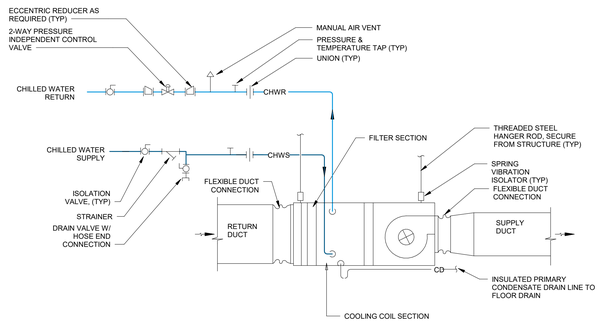

8 FAN COIL UNIT DETAIL
N.T.S.

1. VERTICAL INLINE CENTRIFUGAL PUMP
2. SYSTEM INLET
3. SYSTEM OUTLET
4. ISOLATION BUTTERFLY VALVE
5. STRAINER
6. CHECK VALVE
7. PIPE SUPPORT FROM STRUCTURE. SUPPORT PIPING INDEPENDENT OF PUMP.
8. INLINE AIR SEPARATOR

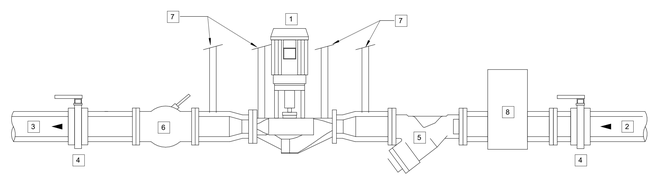

9 INLINE PUMP PIPING DETAIL
N.T.S.

1. ISOLATION VALVES TO BE FITTED ON BOTH SIDES OF PRESSURE SENSOR
2. INSULATION
3. PIPING SYSTEM

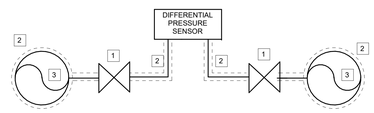

1 DIFFERENTIAL PRESSURE SENSOR DETAIL
N.T.S.

serverfarm
CORGAN
TGRWA STRUCTURAL ENGINEERS
kW Mission Critical Engineering Member of WSP
EP ENGINEERING PLUS
Kimley»Horn

ISSUES

4	1.23.2026	DESIGN DEVELOPMENT

REVISIONS

kW Mission Critical Engineering
Contact: K. DREWNOWSKI Phone: 601.451.2099
Engineer: K. COOPER
License #: 23615 Exp. Date: 00/00/0000

NOT FOR CONSTRUCTION

Date: 12/12/2025

SERVERFARM

Clarksville, AR

MECHANICAL PIPING DETAILS

JOB US0049903.5614
SHEET

M05-34