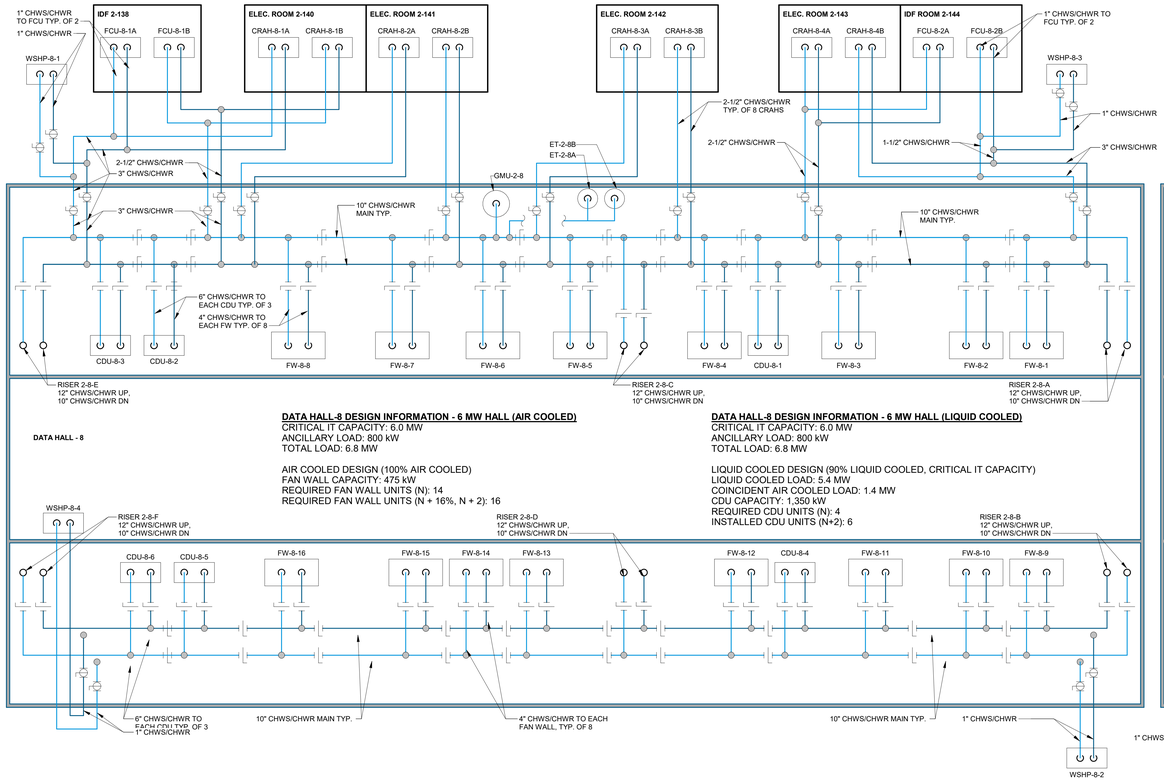

DATA HALL-8 DESIGN INFORMATION - 6 MW HALL (AIR COOLED)
CRITICAL IT CAPACITY: 6.0 MW
ANCILLARY LOAD: 800 kW
TOTAL LOAD: 6.8 MW

AIR COOLED DESIGN (100% AIR COOLED)
FAN WALL CAPACITY: 475 kW
REQUIRED FAN WALL UNITS (N): 14
REQUIRED FAN WALL UNITS (N + 16%, N + 2): 16

DATA HALL-8 DESIGN INFORMATION - 6 MW HALL (LIQUID COOLED)
CRITICAL IT CAPACITY: 6.0 MW
ANCILLARY LOAD: 800 kW
TOTAL LOAD: 6.8 MW

LIQUID COOLED DESIGN (90% LIQUID COOLED, CRITICAL IT CAPACITY)
LIQUID COOLED LOAD: 5.4 MW
COINCIDENT AIR COOLED LOAD: 1.4 MW
CDU CAPACITY: 1,350 kW
REQUIRED CDU UNITS (N): 4
INSTALLED CDU UNITS (N+2): 6

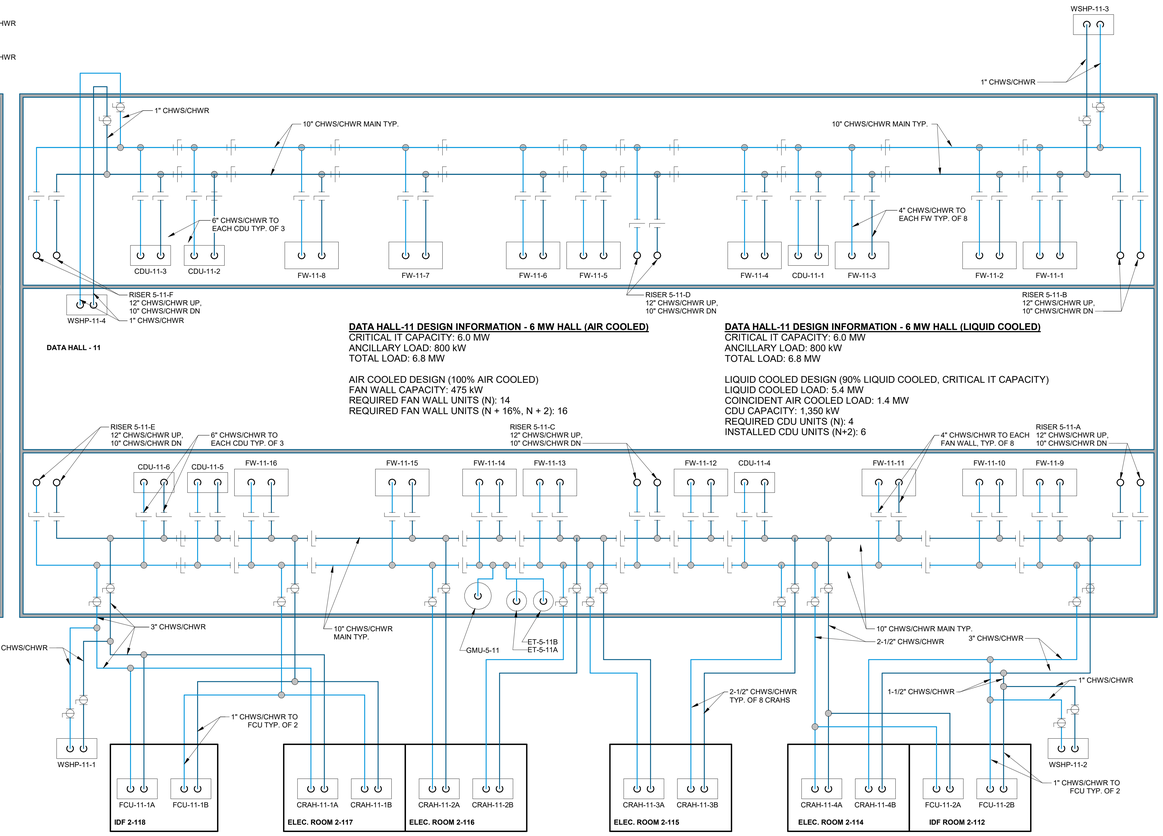

DATA HALL-11 DESIGN INFORMATION - 6 MW HALL (AIR COOLED)
CRITICAL IT CAPACITY: 6.0 MW
ANCILLARY LOAD: 800 kW
TOTAL LOAD: 6.8 MW

AIR COOLED DESIGN (100% AIR COOLED)
FAN WALL CAPACITY: 475 kW
REQUIRED FAN WALL UNITS (N): 14
REQUIRED FAN WALL UNITS (N + 16%, N + 2): 16

DATA HALL-11 DESIGN INFORMATION - 6 MW HALL (LIQUID COOLED)
CRITICAL IT CAPACITY: 6.0 MW
ANCILLARY LOAD: 800 kW
TOTAL LOAD: 6.8 MW

LIQUID COOLED DESIGN (90% LIQUID COOLED, CRITICAL IT CAPACITY)
LIQUID COOLED LOAD: 5.4 MW
COINCIDENT AIR COOLED LOAD: 1.4 MW
CDU CAPACITY: 1,350 kW
REQUIRED CDU UNITS (N): 4
INSTALLED CDU UNITS (N+2): 6

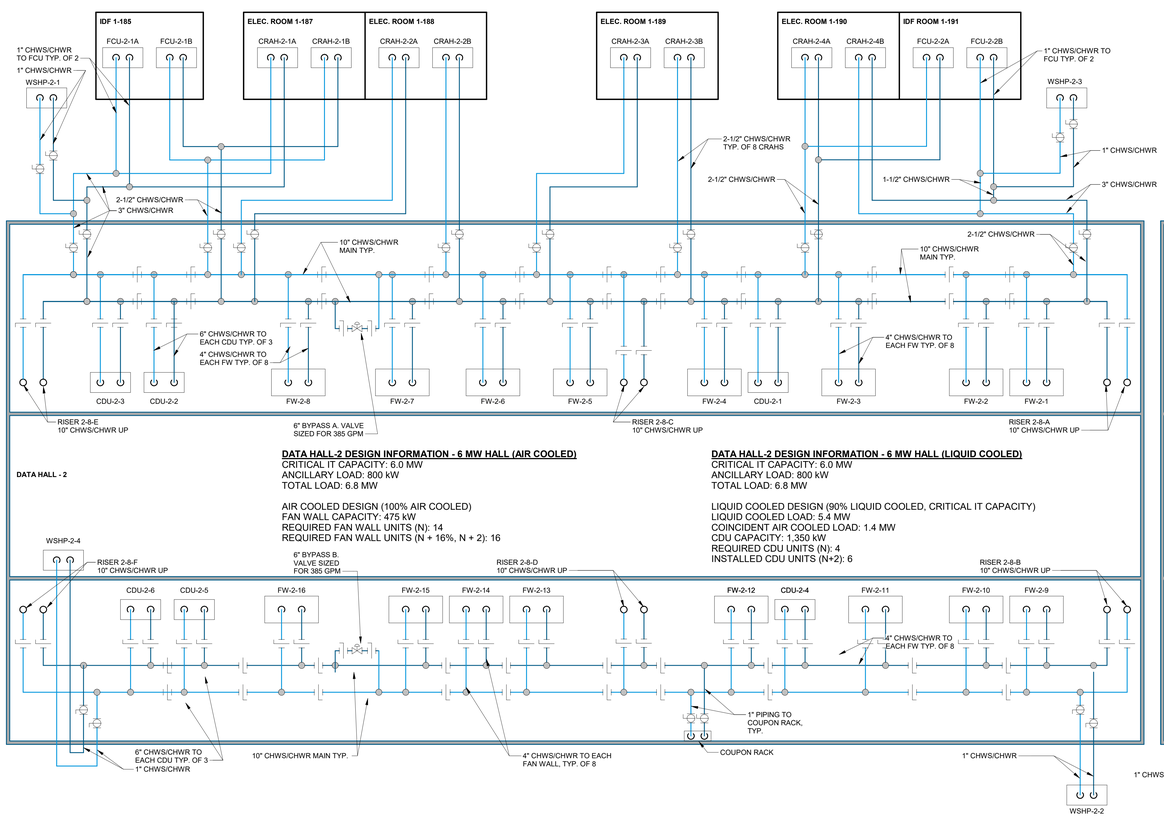

DATA HALL-2 DESIGN INFORMATION - 6 MW HALL (AIR COOLED)
CRITICAL IT CAPACITY: 6.0 MW
ANCILLARY LOAD: 800 kW
TOTAL LOAD: 6.8 MW

AIR COOLED DESIGN (100% AIR COOLED)
FAN WALL CAPACITY: 475 kW
REQUIRED FAN WALL UNITS (N): 14
REQUIRED FAN WALL UNITS (N + 16%, N + 2): 16

DATA HALL-2 DESIGN INFORMATION - 6 MW HALL (LIQUID COOLED)
CRITICAL IT CAPACITY: 6.0 MW
ANCILLARY LOAD: 800 kW
TOTAL LOAD: 6.8 MW

LIQUID COOLED DESIGN (90% LIQUID COOLED, CRITICAL IT CAPACITY)
LIQUID COOLED LOAD: 5.4 MW
COINCIDENT AIR COOLED LOAD: 1.4 MW
CDU CAPACITY: 1,350 kW
REQUIRED CDU UNITS (N): 4
INSTALLED CDU UNITS (N+2): 6

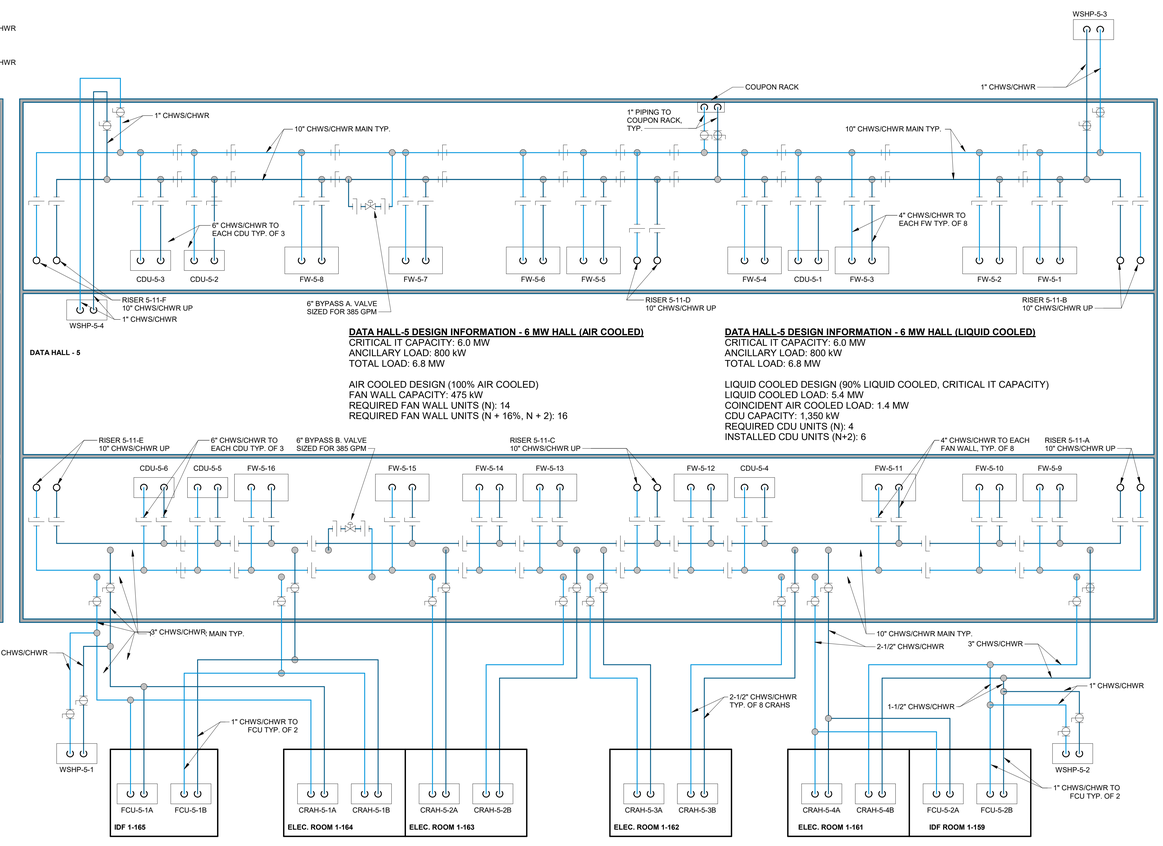

DATA HALL-5 DESIGN INFORMATION - 6 MW HALL (AIR COOLED)
CRITICAL IT CAPACITY: 6.0 MW
ANCILLARY LOAD: 800 kW
TOTAL LOAD: 6.8 MW

AIR COOLED DESIGN (100% AIR COOLED)
FAN WALL CAPACITY: 475 kW
REQUIRED FAN WALL UNITS (N): 14
REQUIRED FAN WALL UNITS (N + 16%, N + 2): 16

DATA HALL-5 DESIGN INFORMATION - 6 MW HALL (LIQUID COOLED)
CRITICAL IT CAPACITY: 6.0 MW
ANCILLARY LOAD: 800 kW
TOTAL LOAD: 6.8 MW

LIQUID COOLED DESIGN (90% LIQUID COOLED, CRITICAL IT CAPACITY)
LIQUID COOLED LOAD: 5.4 MW
COINCIDENT AIR COOLED LOAD: 1.4 MW
CDU CAPACITY: 1,350 kW
REQUIRED CDU UNITS (N): 4
INSTALLED CDU UNITS (N+2): 6

1 CHILLED WATER FLOW DIAGRAM - DATA HALLS 2, 5, 8, 11
NTS

serverfarm
CORGAN
TGRWA STRUCTURAL ENGINEERS
kW Mission Critical Engineering Member of WSP
EP ENGINEERING PLUS
Kimley»Horn

ISSUES		
4	1.23.2026	DESIGN DEVELOPMENT

REVISIONS

kW Mission Critical Engineering
Contact: K. DREWNOWSKI Phone: 601.451.2099
Engineer: K. COOPER
License #: 23615 Exp. Date: 00/00/0000

NOT FOR CONSTRUCTION

Date: 12/12/2025

SERVERFARM

Clarksville, AR

CHILLED WATER FLOW DIAGRAM - DATA HALLS 2, 5, 8, 11

JOB US0049903.5614
SHEET

M01-42

1/23/2026 3:19:54 PM M01-42 CHILLED WATER FLOW DIAGRAM - DATA HALLS 2, 5, 8, 11