CHILLED WATER PLANT 2-8 DESIGN INFORMATION - 12 MW PLANT TOTAL, (2) 6 MW DATA HALLS PER PLANT

CRITICAL IT CAPACITY: 12.0 MW
ANCILLARY LOAD: 2,400 kW
TOTAL LOAD: 14.4 MW
AIR COOLED CHILLER CAPACITY: 1,230 kW

REQUIRED NUMBER OF CHILLERS = 12
CHILLER COUNT: N + 16% = 14

CHILLED WATER SUPPLY / RETURN TEMPERATURE: 66°F / 80°F
N=20 DESIGN CONDITION: -2.2°F
CHILLED WATER FLUID: 25% PROPYLENE GLYCOL
BURST POINT OF FLUID: 0°F

RISER DESIGN INFORMATION - 12 MW BLOCK

FAILURE MODE - MAXIMUM RISER VELOCITY 5 RISERS, 8.7 FPS (BASED ON HYDRAULIC ANALYSIS)
NORMAL MODE - MAXIMUM RISER VELOCITY 6 RISERS, 5.8 FPS (BASED ON HYDRAULIC ANALYSIS)

CHILLED WATER PLANT 5-11 DESIGN INFORMATION - 12 MW PLANT TOTAL, (2) 6 MW DATA HALLS PER PLANT

CRITICAL IT CAPACITY: 12.0 MW
ANCILLARY LOAD: 2,400 kW
TOTAL LOAD: 14.4 MW
AIR COOLED CHILLER CAPACITY: 1,230 kW

REQUIRED NUMBER OF CHILLERS = 12
CHILLER COUNT: N + 16% = 14

CHILLED WATER SUPPLY / RETURN TEMPERATURE: 66°F / 80°F
N=20 DESIGN CONDITION: -2.2°F
CHILLED WATER FLUID: 25% PROPYLENE GLYCOL
BURST POINT OF FLUID: 0°F

RISER DESIGN INFORMATION - 12 MW BLOCK

FAILURE MODE - MAXIMUM RISER VELOCITY 5 RISERS, 8.7 FPS (BASED ON HYDRAULIC ANALYSIS)
NORMAL MODE - MAXIMUM RISER VELOCITY 6 RISERS, 5.8 FPS (BASED ON HYDRAULIC ANALYSIS)

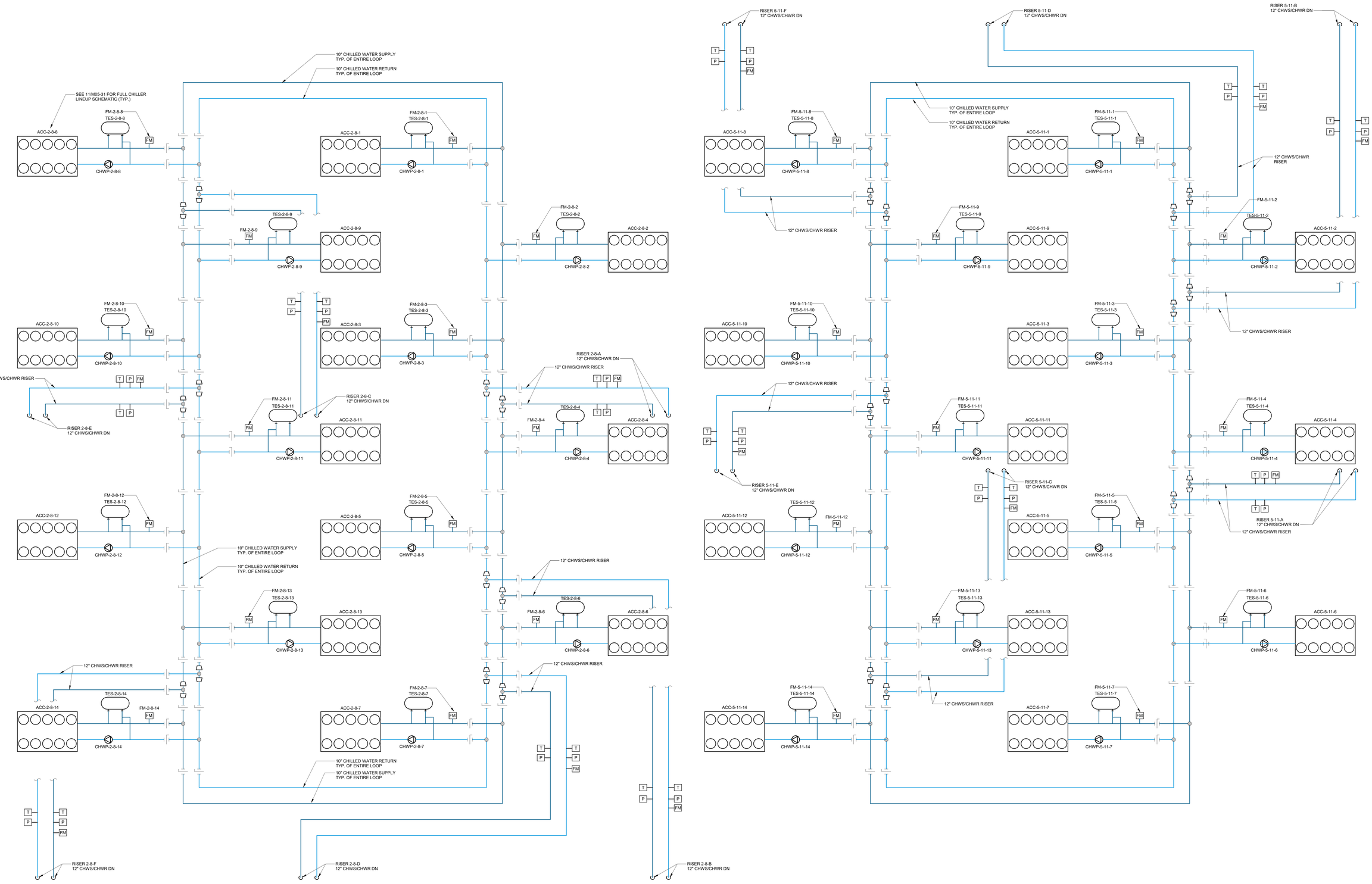

1 CHILLED WATER FLOW DIAGRAM - ROOF PLANTS 2-8, 5-11
NTS

serverfarm
CORGAN
TGRWA STRUCTURAL ENGINEERS
kW Mission Critical Engineering Member of WSP
EP ENGINEERING PLUS
Kimley»Horn

ISSUES		
4	1.23.2026	DESIGN DEVELOPMENT

REVISIONS

kW Mission Critical Engineering
Contact: K. DREWNOWSKI Phone: 601.451.2099
Engineer: K. COOPER
License #: 23615 Exp. Date: 00/00/0000

NOT FOR CONSTRUCTION

Date: 12/12/2025

SERVERFARM

Clarksville, AR

CHILLED WATER FLOW DIAGRAM - ROOF PLANTS 2-8, 5-11

JOB US0049903.5614
SHEET

M01-32

1/23/2026 3:18:34 PM M01-32 CHILLED WATER FLOW DIAGRAM - ROOF PLANTS 2-8, 5-11