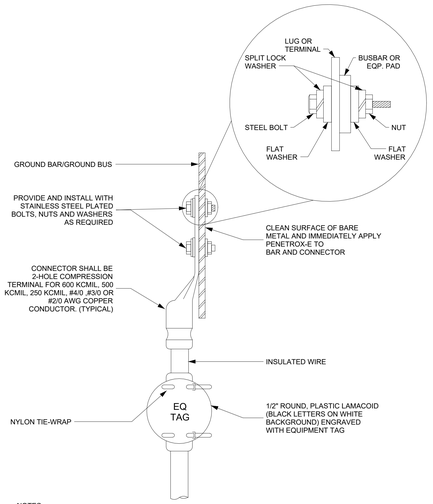

NOTES:
1. GROUND LUG COMPRESSION TERMINAL CONNECTION DETAIL APPLIES TO GROUND CONDUCTORS TERMINATING ON ELECTRICAL GROUND BARS AND TELECOMMUNICATION GROUND BARS.
2. ALL CONDUCTORS TERMINATED ON THE GROUND BAR SHALL BE LABELED WITH THE NAME OF THE ITEM BEING GROUNDED.
3. BOLTED CONNECTIONS SHALL BE MADE WITH STAINLESS STEEL HARDWARE AND SHALL BE TORQUED IN ACCORDANCE WITH MANUFACTURER'S SPECIFICATION. BOLTS SHALL FACE OUT FROM THE BUS/GROUND BARS WITH THE NUT VISIBLE FROM THE FRONT. CONNECTIONS SHALL BE MADE WITH A TORQUE WRENCH AND SHALL BE MARKED WITH A MARKER OR PAINT STRIPE TO SHOW FULL TORQUED POSITION NUT.
4. CLEAN SURFACE OF BARE METAL BUS AND IMMEDIATELY APPLY ANTIOXIDANT JOINT COMPOUND TO BUS AND CONDUCTOR.
5. AFTER INSULATION, ADDITIONAL HOLES SHALL NOT BE DRILLED IN GROUND BARS.
6. PROVIDE FRONT TERMINAL ONLY; DO NOT DOUBLE LUG CONNECTIONS.

11 GROUND LUG COMPRESSION TERMINAL CONNECTION DETAIL
NO SCALE

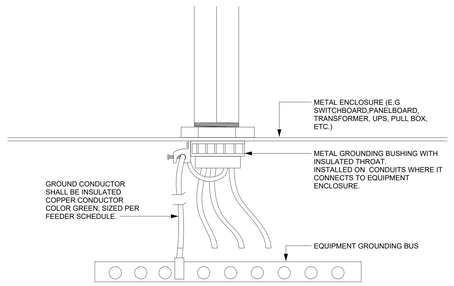

NOTES:
1. FOR EQUIPMENT WITHOUT A GROUNDING BUS, TERMINATE JUMPER TO METAL ENCLOSURE WITH PROPERLY PREPARED SURFACE AND LUG.

5 EQUIPMENT GROUND CONNECTION
NO SCALE

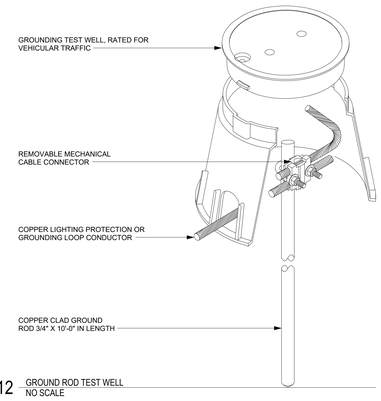

12 GROUND ROD TEST WELL
NO SCALE

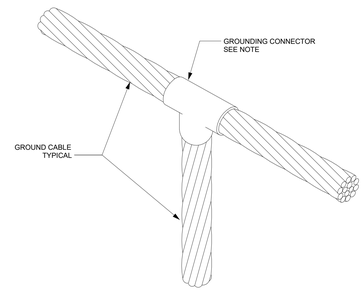

NOTES:
1. FOR ABOVE GROUND CABLE TAPS USE BURNDY TYPE "NYT" PRESSURE CONNECTOR AND FOR BELOW GROUND CABLE TAPS USE CADWELD TYPE "TA" WELD CONNECTION OR HIGH PRESSURE IRREVERSIBLE CRIMPS.

10 GROUND CABLE TAP
NO SCALE

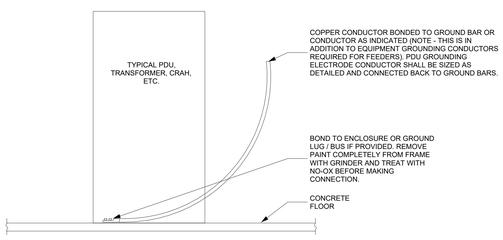

6 EQUIPMENT GROUNDING DETAIL
NO SCALE

CONDUIT OR PIPE SIZE	GROUND CLAMP O-Z GEDNEY
1/2"	CAT. # G-50-G
3/4"	CAT. # G-51-G
1"	CAT. # G-52-G
1-1/4", 1-1/2", 2"	CAT. # G-200-G
2-1/2", 3", 3-1/2"	CAT. # G-350-G
4", 4-1/2", 5"	CAT. # G-500-G
6"	CAT. # G-600-G

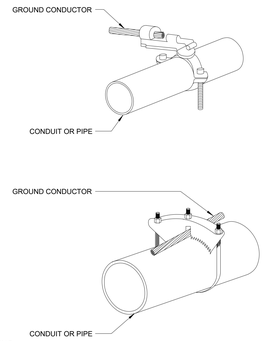

15 METHOD OF BONDING CONDUIT OR PIPE TO GRD. RING
NO SCALE

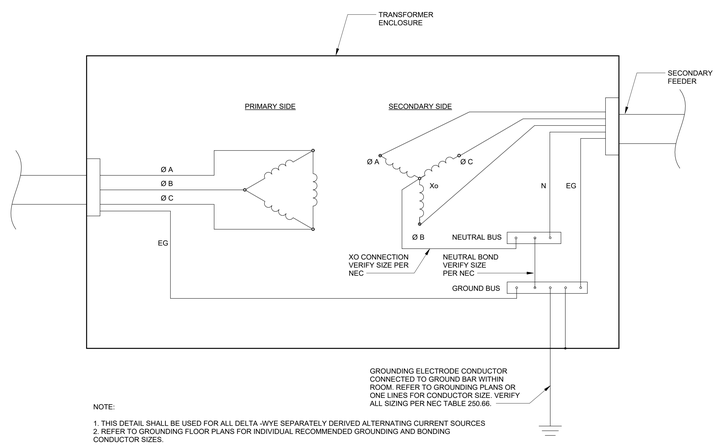

NOTE:
1. THIS DETAIL SHALL BE USED FOR ALL DELTA -WYE SEPARATELY DERIVED ALTERNATING CURRENT SOURCES
2. REFER TO GROUNDING FLOOR PLANS FOR INDIVIDUAL RECOMMENDED GROUNDING AND BONDING CONDUCTOR SIZES.

14 LV TRANSFORMER DELTA-WYE GROUNDING DETAIL
NO SCALE

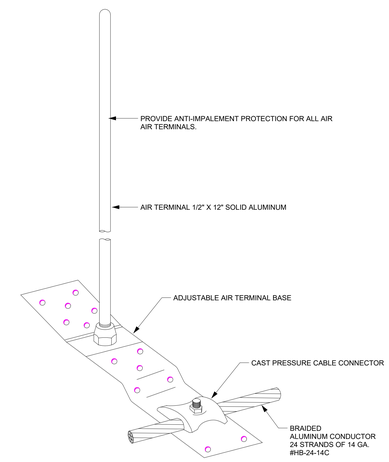

NOTES:
1. WHERE MOUNTED TO THE ROOF OR WALKING SURFACE LEVEL AND IMPALEMENT HAZARD EXISTS, AIR TERMINALS SHALL BE 1/2" X 48" LEAD COATED COPPER.

4 AIR TERMINAL WITH ADJUSTABLE MOUNTING
NO SCALE

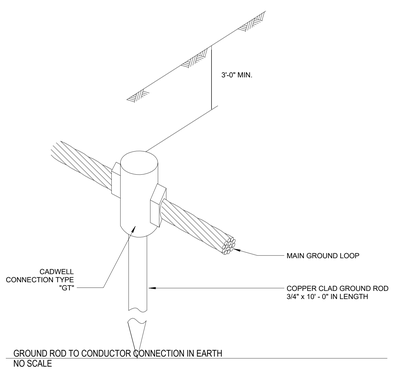

1 GROUND ROD TO CONDUCTOR CONNECTION IN EARTH
NO SCALE

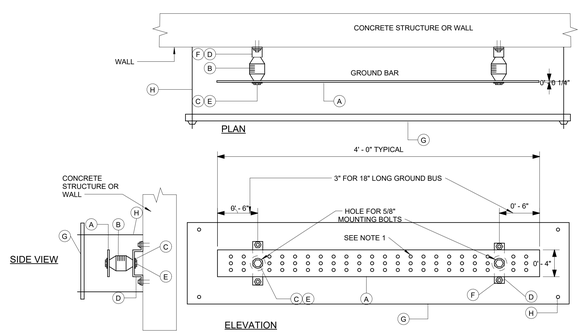

DETAIL NOTES:
1. PROVIDE THREE HOLES SUITABLE FOR NEMA SPACING FOR BOTH #2/0 THROUGH 600 KCMIL 2 HOLE COMPRESSION CONNECTORS.
2. MOUNT TOP OF GROUND BAR 12" ABOVE FINISHED FLOOR COORDINATING WITH ARCHITECT.
3. PLEXIGLASS COVER AND LABELS SHALL BE PROVIDED.
4. PROVIDE 4'-0" LONG GROUND BAR (TYP.) WHERE SPACE IS LIMITED PROVIDE A MINIMUM OF 25% SPARE POSITIONS IN ADDITION TO REQUIRED CONNECTIONS, OR A MINIMUM OF (2) SPARE POSITIONS, WHICHEVER IS GREATER, AND (1) ADDITIONAL SPARE POSITION FOR FUTURE BUS EXTENSION.

DETAIL NOTES:
(A) COPPER GROUND BAR
(B) INSULATORS - NEWTON CAT. #3061-4
(C) 5/8" LOCKWASHERS - NEWTON CAT. #3015-B
(D) WALL MOUNTING BRACKET - NEWTON CAT. #A-6056
(E) 5/8" = 11X1" HHCS BOLT - NEWTON CAT. #3012-1
(F) PROVIDE APPROPRIATE EXPANSION SHIELDS & BOLTS FOR MOUNTING ON CONCRETE STRUCTURE OR WALL.
(G) PLEXIGLASS COVER WITH GROUND BAR NAME.
(H) PLEXIGLASS COVER SUPPORTS

8 GROUND BAR DETAIL
NO SCALE

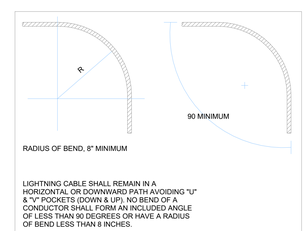

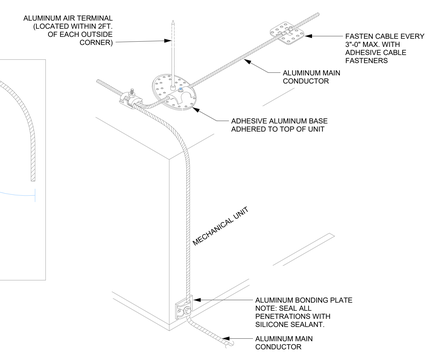

3 LIGHTNING PROTECTION FOR MECHANICAL EQUIPMENT
NO SCALE

serverfarm
CORGAN
TGRWA STRUCTURAL ENGINEERS
kW Mission Critical Engineering Member of WSP
EP ENGINEERING PLUS
Kimley»Horn

	ISSUES	
1	11/12/2025	CONCEPTUAL DESIGN
2	12/12/2025	SCHEMATIC DESIGN
3	12/17/2025	STEEL MILL ORDER
4	1/23/2026	DESIGN DEVELOPMENT

REVISIONS

kW Mission Critical Engineering
Contact: David Adams Phone: 703.926.0715
Engineer: Matthew Fagert
License #: 123456 Exp. Date: 00/00/0000

NOT FOR CONSTRUCTION
Date: 00/00/0000

SERVERFARM
Clarksville, AR

GROUNDING DETAILS

JOB SHEET US0049903.5614

E03-50

1/23/2026 12:56:33 PM E03-50 GROUNDING DETAILS