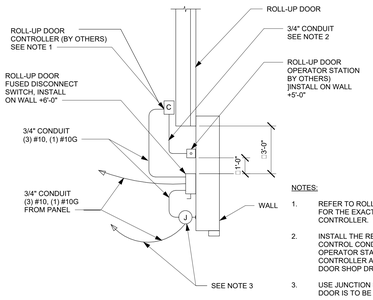

NOTES:

1. REFER TO ROLL-UP DOOR SHOP DRAWINGS FOR THE EXACT LOCATION OF DOOR CONTROLLER.
2. INSTALL THE REQUIR3ED NUMBER OF CONTROL CONDUCTORS FROM THE DOOR OPERATOR STATION (FURNISHED) TO THE CONTROLLER ACCORDING TO THE ROLL-UP DOOR SHOP DRAWINGS.
3. USE JUNCTION BOX HERE IF MORE THAN ONE DOOR IS TO BE CONNECTED TO A CIRCUIT.

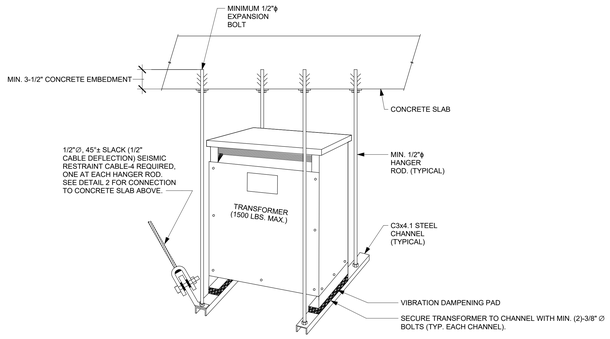

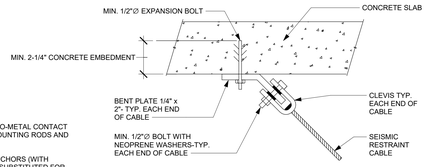

DETAIL 2

NOTES:

1. THERE SHALL BE NO METAL-TO-METAL CONTACT BETWEEN TRANSFORMER, MOUNTING RODS AND CHANNELS.
2. DROP-IN TYPE EXPANSION ANCHORS (WITH INTERNAL THREADS) MAY BE SUBSTITUTED FOR WEDGE-TYPE EXPANSION ANCHOR SHOWN.

serverfarm

CORGAN

TGRWA STRUCTURAL ENGINEERS

kW Mission Critical Engineering Member of WSP

EP ENGINEERING PLUS

Kimley»Horn

ISSUES

1	11/12/2025	CONCEPTUAL DESIGN
2	12/12/2025	SCHEMATIC DESIGN
3	12/17/2025	STEEL MILL ORDER
4	1/23/2026	DESIGN DEVELOPMENT

REVISIONS

kW Mission Critical Engineering
Contact: David Adams Phone: 703.926.0715
Engineer: Matthew Fagert
License #: 123456 Exp. Date: 00/00/0000

NOT FOR CONSTRUCTION

Date: 00/00/0000

SERVERFARM

Clarksville, AR

POWER DETAILS

JOB US0049903.5614
SHEET

E02-50

1/23/2026 4:04:10 PM E02-50 POWER DETAILS