TYPICAL 7 TO MAKE 6 PLANT
(2) 6MW DATA HALLS

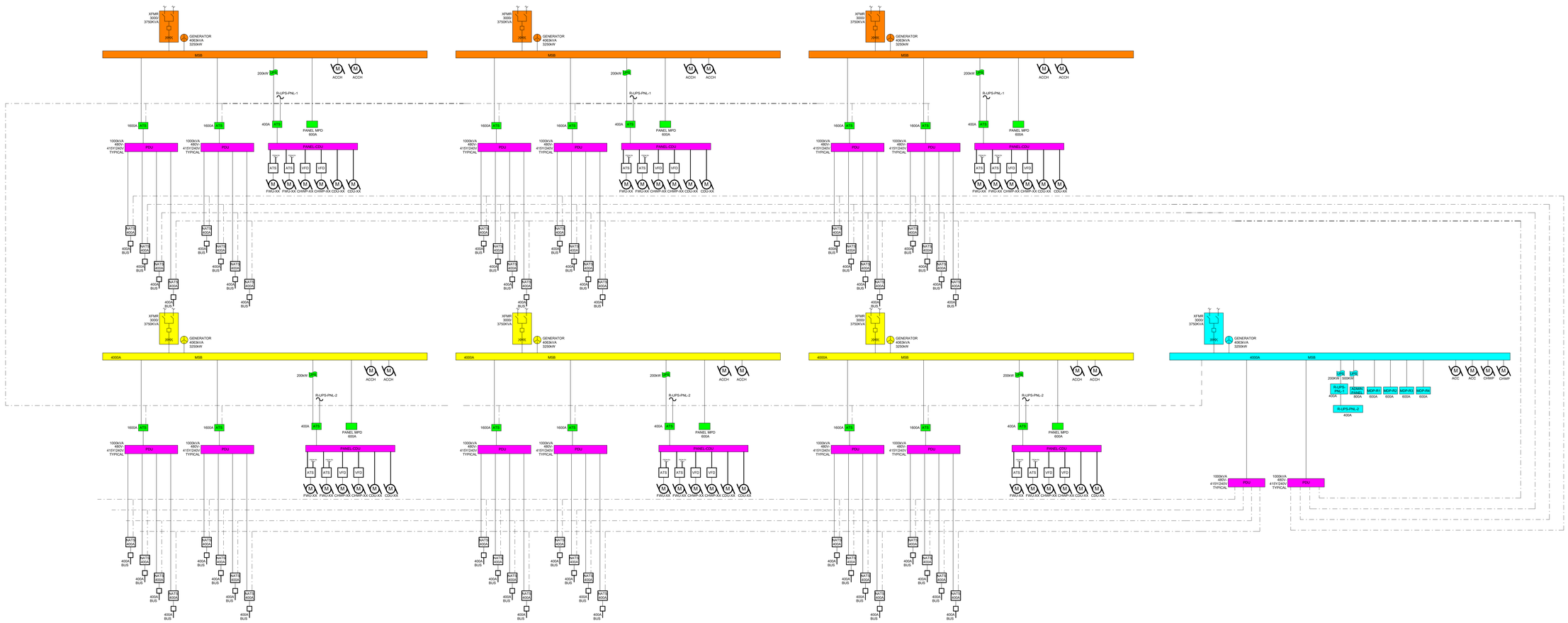

serverfarm

CORGAN

TGRWA STRUCTURAL ENGINEERS

kW Mission Critical Engineering Member of WSP

EP ENGINEERING PLUS

Kimley»Horn

	ISSUES	
1	11/12/2025	CONCEPTUAL DESIGN
2	12/12/2025	SCHEMATIC DESIGN
3	12/17/2025	STEEL MILL ORDER
4	1/23/2026	DESIGN DEVELOPMENT

	REVISIONS	

kW Mission Critical Engineering
Contact: David Adams Phone: 703.926.0715
Engineer: Matthew Fagert
License #: 123456 Exp. Date: 00/00/0000

NOT FOR CONSTRUCTION

Date: 00/00/0000

SERVERFARM

Clarksville, AR

POWER BLOCK DIAGRAM 7 TO MAKE 6 TYPICAL

JOB US0049903.5614
SHEET

E01-01

1/23/2026 3:53:03 PM E01-01 POWER BLOCK DIAGRAM 7 TO MAKE 6 TYPICAL