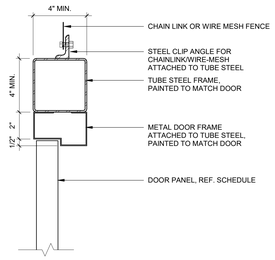

10 TYPICAL DOOR JAMB - CHAIN LINK & WIRE MESH FENCE
3" = 1'-0"

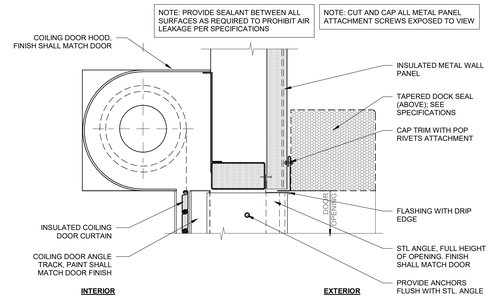

7 HEAD DETAIL - EXTERIOR OHC DOOR
1 1/2" = 1'-0"

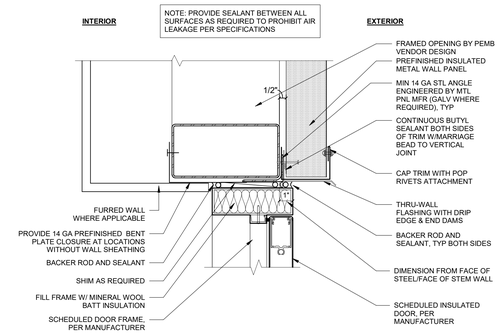

3 HEAD DETAIL - EXTERIOR DOOR
3" = 1'-0"

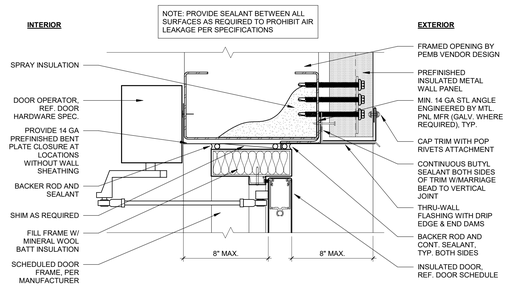

9 HEAD DETAIL - EXTERIOR DOOR WITH DOOR OPERATOR
3" = 1'-0"

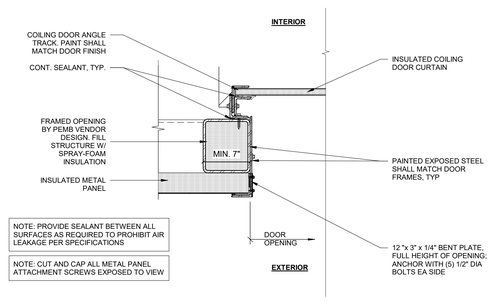

6 JAMB DETAIL - EXTERIOR OHC DOOR @ IMP
1 1/2" = 1'-0"

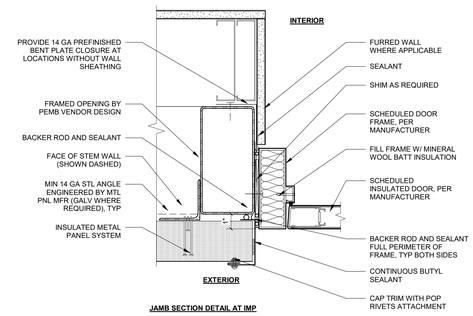

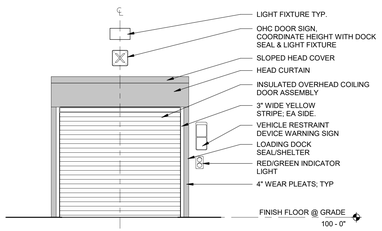

8 ELEVATION - EXTERIOR OHC DOOR
1/4" = 1'-0"

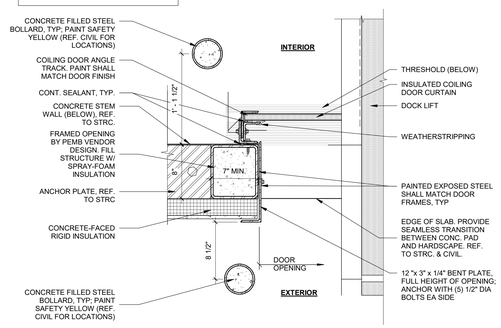

5 JAMB DETAIL - EXTERIOR OHC DOOR @ CONCRETE CURB
1 1/2" = 1'-0"

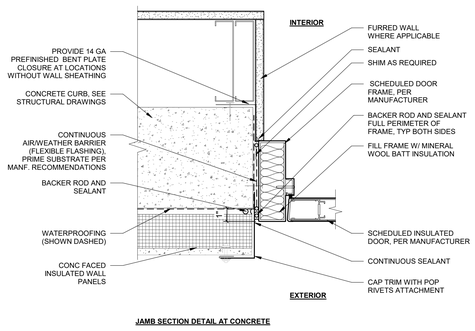

2 JAMB @ BASE DETAIL - EXTERIOR DOOR
3" = 1'-0"

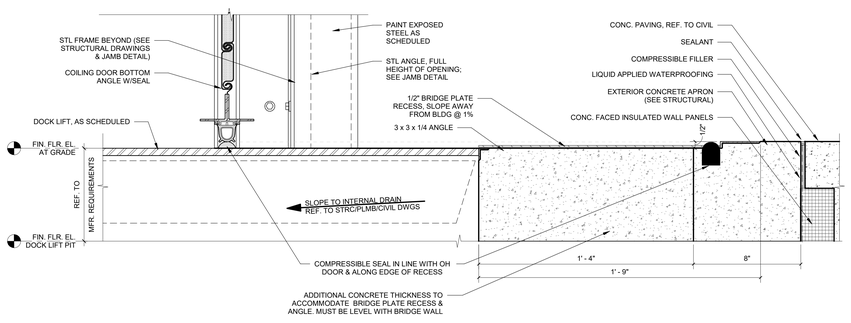

4 EXTERIOR OHC DOOR - SILL - TYP.
3" = 1'-0"

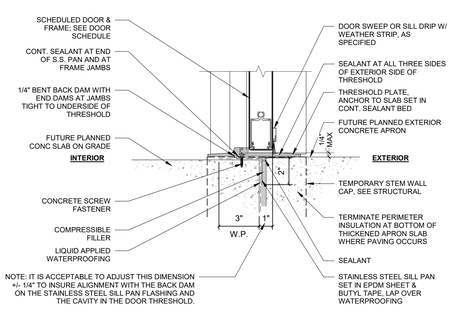

1 THRESHOLD DETAIL - EXTERIOR DOOR
3" = 1'-0"

serverfarm
CORGAN
TGRWA STRUCTURAL ENGINEERS
kW Mission Critical Engineering Member of WSP
EP ENGINEERING PLUS
Kimley»Horn

ISSUES		
1	11/12/2025	CONCEPTUAL
2	12/12/2025	SCHEMATIC DESIGN
3	12/17/2025	STILL MILL ORDER
4	01/23/2026	DESIGN DEVELOPMENT
5		
6		
7		
8		
9		
10		
11		
12		
13		

REVISIONS

NOT FOR CONSTRUCTION

This document is incomplete and may not be used for regulatory approval, permit or construction.
Date of issue:
01/23/2026

ARK01
DESIGN DEVELOPMENT
CLARKSVILLE, AR 72830

EXTERIOR DOOR DETAILS

JOB 25864
SHEET
A08-22

1/23/2026 2:44:52 PM A08-22 EXTERIOR DOOR DETAILS