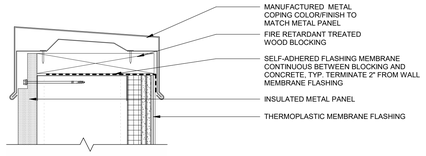

7 SECTION DETAIL -PARAPET
3" = 1'-0"

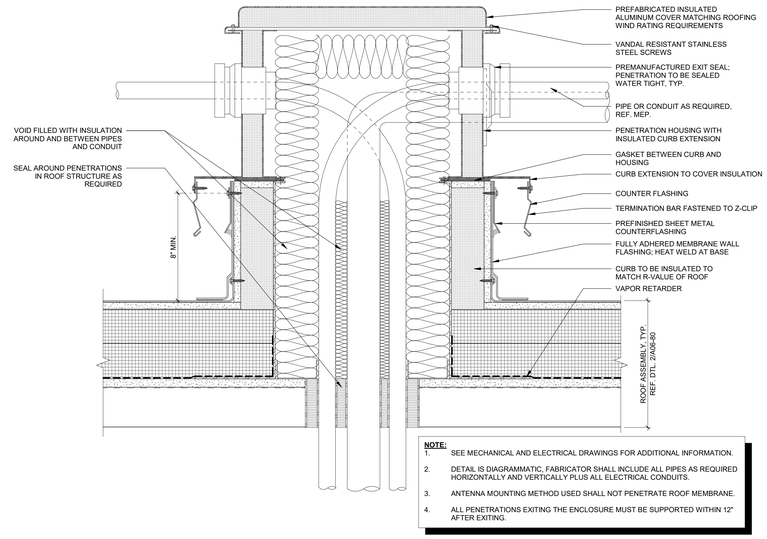

NOTE:
1. SEE MECHANICAL AND ELECTRICAL DRAWINGS FOR ADDITIONAL INFORMATION.
2. DETAIL IS DIAGRAMMATIC, FABRICATOR SHALL INCLUDE ALL PIPES AS REQUIRED HORIZONTALLY AND VERTICALLY PLUS ALL ELECTRICAL CONDUITS.
3. ANTENNA MOUNTING METHOD USED SHALL NOT PENETRATE ROOF MEMBRANE.
4. ALL PENETRATIONS EXITING THE ENCLOSURE MUST BE SUPPORTED WITHIN 12" AFTER EXITING.

8 SECTION DETAIL - ROOF PENETRATION HOUSE
3" = 1'-0"

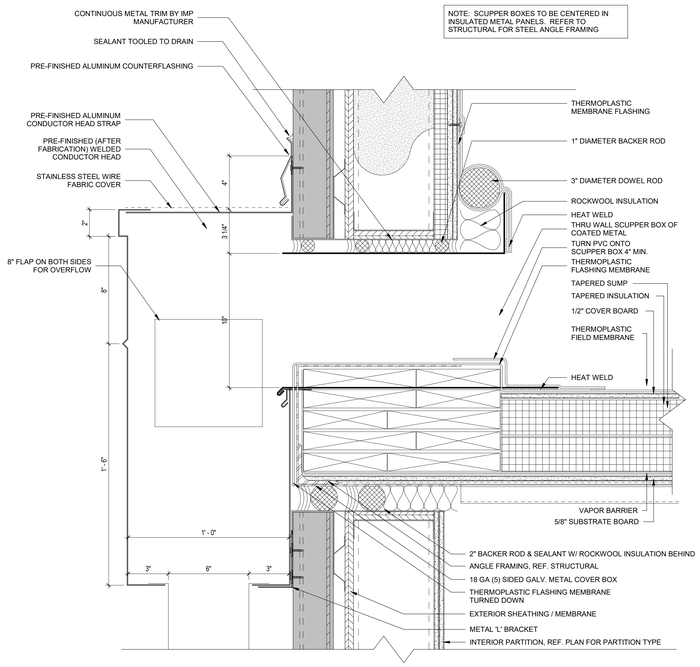

6 SCUPPER OPENING - OVERFLOW
3" = 1'-0"

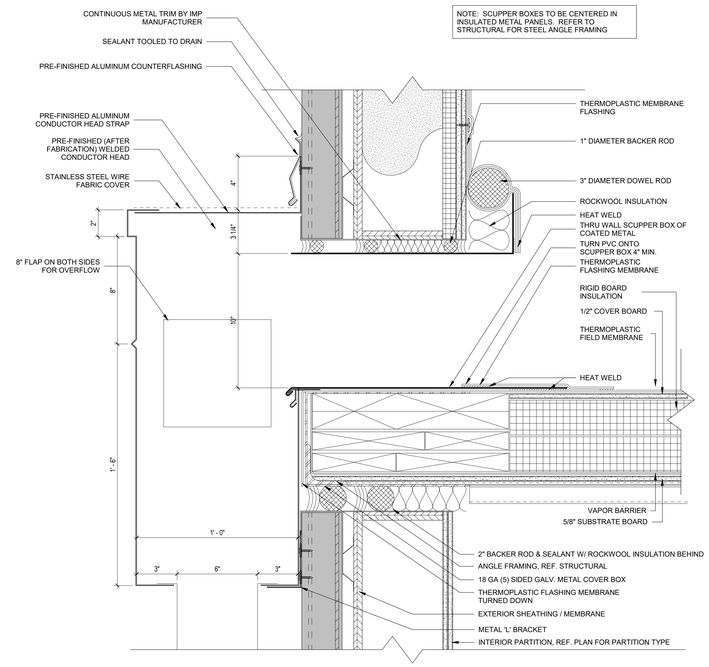

5 IMP - PRIMARY
3" = 1'-0"

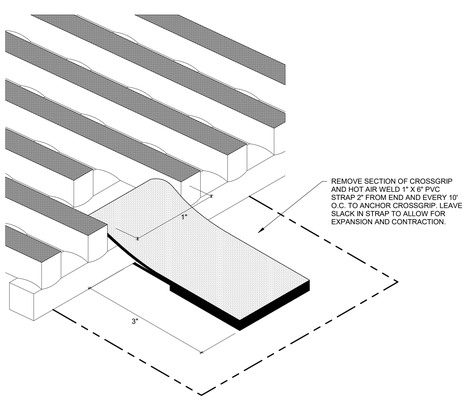

4 CROSS GRIP ANCHOR IN HIGH WIND AREAS
1/2" = 1'-0"

NOTE: PROVIDE ADJUSTABLE HEIGHT PIPE SUPPORTS @ 8'-0" MIN. O.C. AND AT CHANGES IN DIRECTION OR ELEVATION

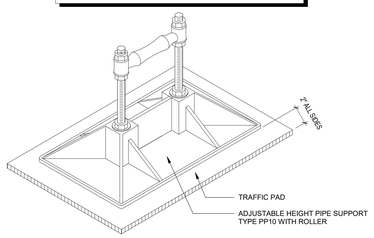

3 PIPE SUPPORT
3" = 1'-0"

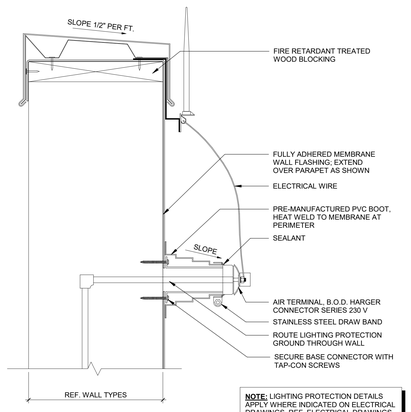

NOTE: LIGHTING PROTECTION DETAILS APPLY WHERE INDICATED ON ELECTRICAL DRAWINGS. REF. ELECTRICAL DRAWINGS FOR LIGHTING PROTECTION HANGER AND LIGHTING ROD LOCATIONS.

2 SECTION DETAIL @ LIGHTNING PROTECTION - COPING CLIP
3" = 1'-0"

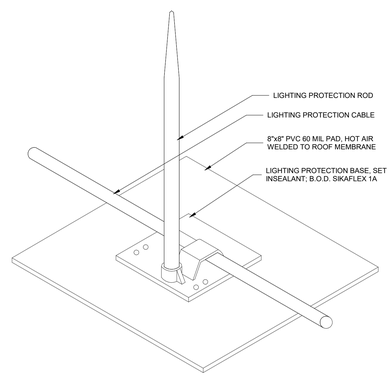

1 DETAIL @ LIGHTNING AIR TERMINAL
1" = 1'-0"

serverfarm
CORGAN
TGRWA STRUCTURAL ENGINEERS
kW Mission Critical Engineering Member of WSP
EP ENGINEERING PLUS
Kimley»Horn

ISSUES		
1	11/12/2025	CONCEPTUAL
2	12/12/2025	SCHEMATIC DESIGN
3	12/17/2025	STILL MILL ORDER
4	01/23/2026	DESIGN DEVELOPMENT
5		
6		
7		
8		
9		
10		
11		
12		
13		

REVISIONS

NOT FOR CONSTRUCTION

This document is incomplete and may not be used for regulatory approval, permit or construction.
Date of issue:
01/23/2026

ARK01
DESIGN DEVELOPMENT
CLARKSVILLE, AR 72830

ROOF DETAILS

JOB 25864
SHEET
A06-81

1/23/2026 2:44:32 PM A06-81 ROOF DETAILS