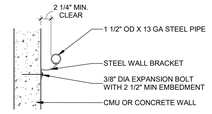

15 ST - HANDRAIL MOUNTING AT MASONARY WALL
1 1/2" = 1'-0"

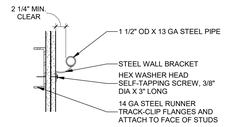

14 ST - HANDRAIL MOUNTING AT GYP. BOARD WALL
1 1/2" = 1'-0"

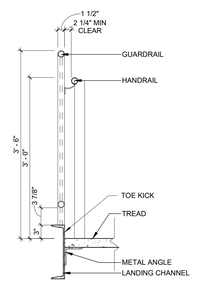

13 HANDRAIL AND GUARDRAIL @ STAIR SECTION
1" = 1'-0"

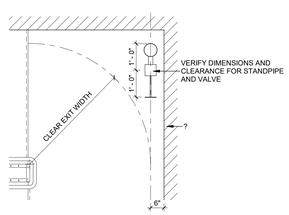

17 ST - STANDPIPE LOCATION
1/2" = 1'-0"

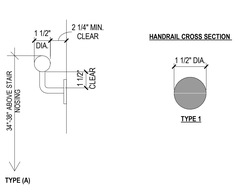

NOTE:
1. MOUNTING HEIGHT IS 34"-38" TO TOP OF GRIPPING SURFACE ABOVE STAIR NOSINGS.
2. SURFACE OF HANDRAIL SHALL BE SMOOTH WITH NO SHARP EDGES.
3. EDGES OF HANDRAILS HAVE A MINIMUM RADIUS OF 1/8" AND NOT ROTATE WITHIN FITTINGS
4. PROVIDE BACKING INSIDE WALL AS REQUIRED.

16 ACCESSIBLE STAIR HANDRAIL REQUIREMENTS - ANSI A 117.1 SEC 505
1 : 5

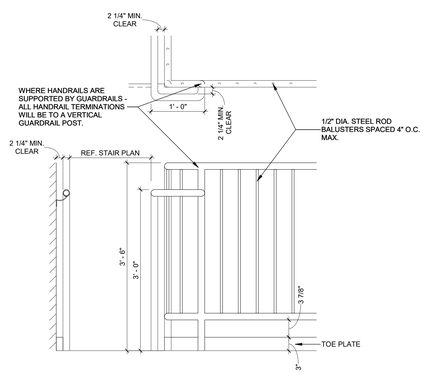

12 HANDRAIL AND GUARDRAIL TOP LEVEL LANDING DETAILS
1" = 1'-0"

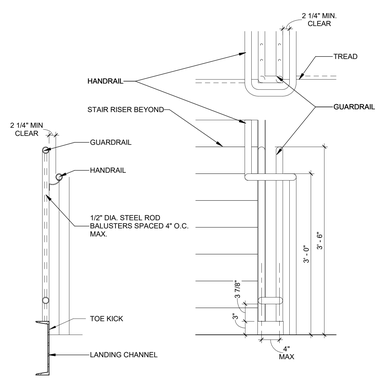

11 HANDRAIL AND GUARDRAIL MID LEVEL LANDING DETAILS
1" = 1'-0"

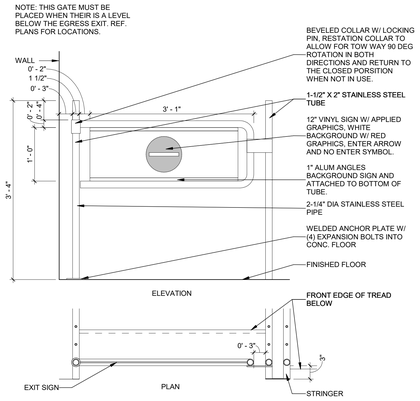

10 ST - STAIR GATE - TYPICAL
1" = 1'-0"

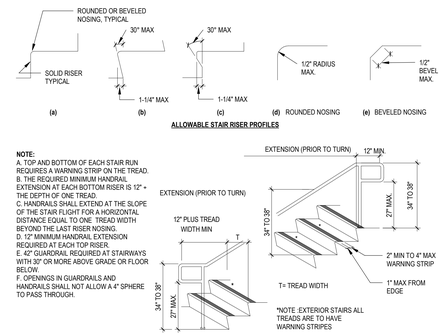

9 ACCESSIBLE STAIR REQUIREMENTS - ANSI A 117.1 SEC 504 Copy 1
1" = 1'-0"

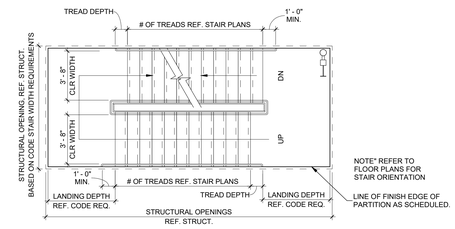

8 TYPICAL EGRESS STAIR - STANDARD PLAN DIAGRAM
N.T.S.

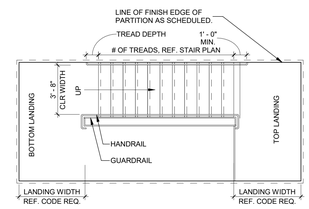

7 TYPICAL EGRESS STAIR - TOP LANDING PLAN DIAGRAM
N.T.S.

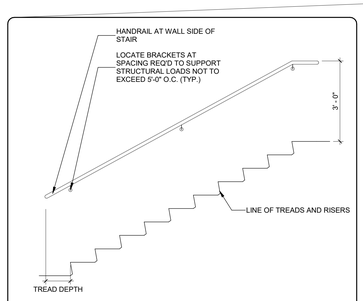

6 TYPICAL HANDRAIL WALL MOUNT ELEVATION
1/2" = 1'-0"

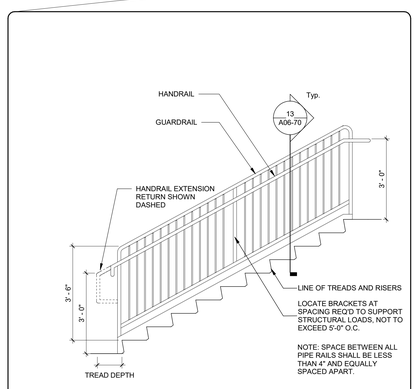

5 TYPICAL HANDRAIL & GUARDRAIL ELEVATION
1/2" = 1'-0"

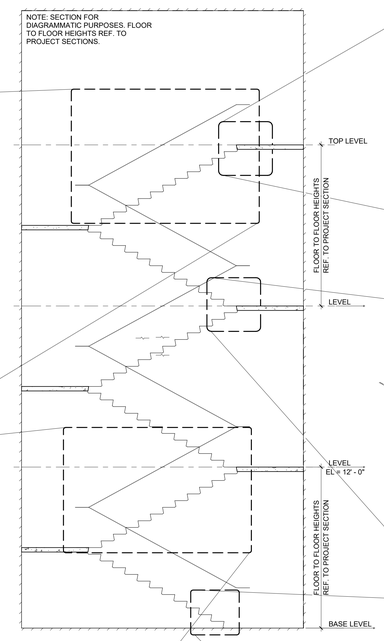

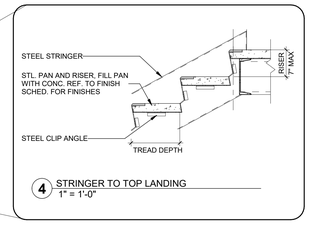

4 STRINGER TO TOP LANDING
1" = 1'-0"

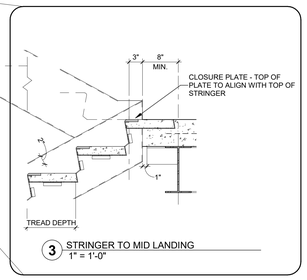

3 STRINGER TO MID LANDING
1" = 1'-0"

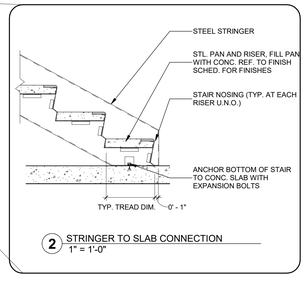

2 STRINGER TO SLAB CONNECTION
1" = 1'-0"

1 TYPICAL EGRESS STAIR SECTION DIAGRAM
N.T.S.

serverfarm
CORGAN
TGRWA STRUCTURAL ENGINEERS
kW Mission Critical Engineering Member of WSP
EP ENGINEERING PLUS
Kimley»Horn

ISSUES		
1	11/12/2025	CONCEPTUAL
2	12/12/2025	SCHEMATIC DESIGN
3	12/17/2025	STILL MILL ORDER
4	01/23/2026	DESIGN DEVELOPMENT
5		
6		
7		
8		
9		
10		
11		
12		
13		

REVISIONS

NOT FOR CONSTRUCTION

This document is incomplete and may not be used for regulatory approval, permit or construction.
Date of issue:
01/23/2026

ARK01
DESIGN DEVELOPMENT
CLARKSVILLE, AR 72830

EGRESS STAIR DETAILS

JOB 25864
SHEET
A06-70

1/23/2026 2:44:26 PM A06-70 EGRESS STAIR DETAILS