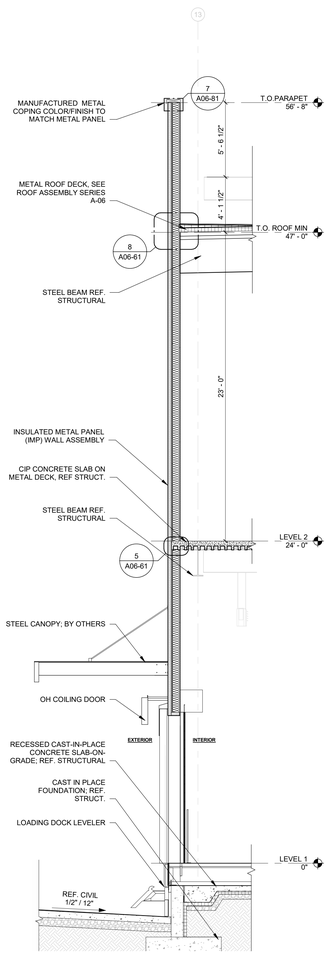

5 WALL SECTION - LOADING DOCK OPENING
1/4" = 1'-0"

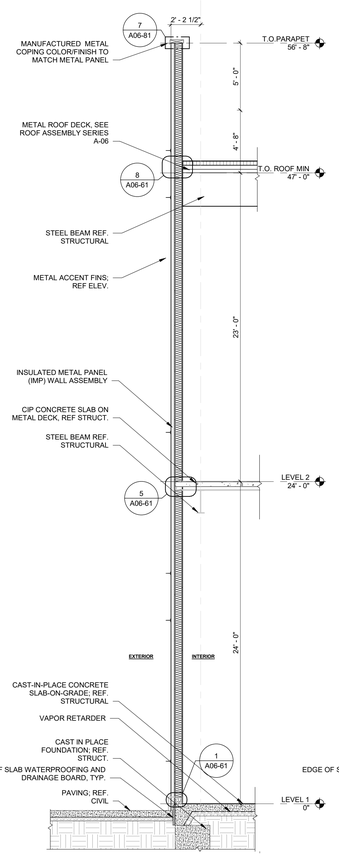

4 WALL SECTION - LOADING DOCK
1/4" = 1'-0"

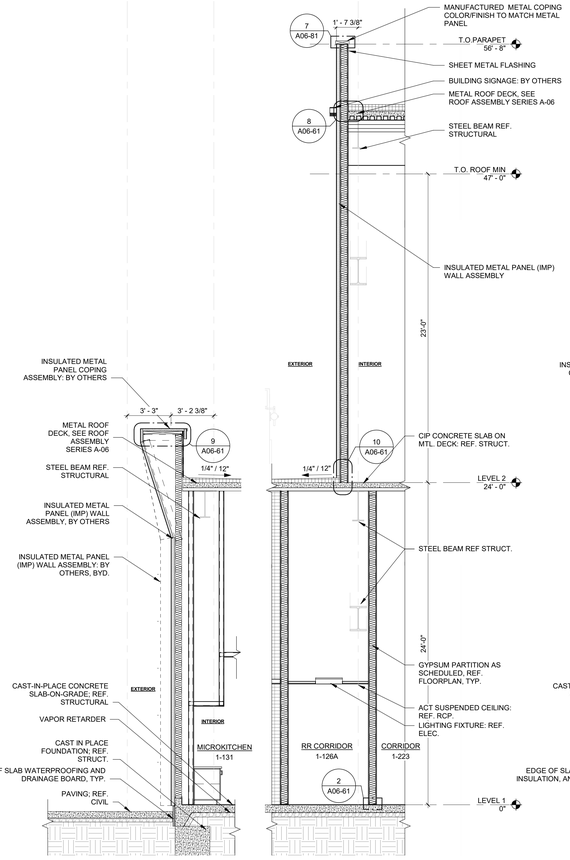

3 WALL SECTION - IMP FEATURE
1/4" = 1'-0"

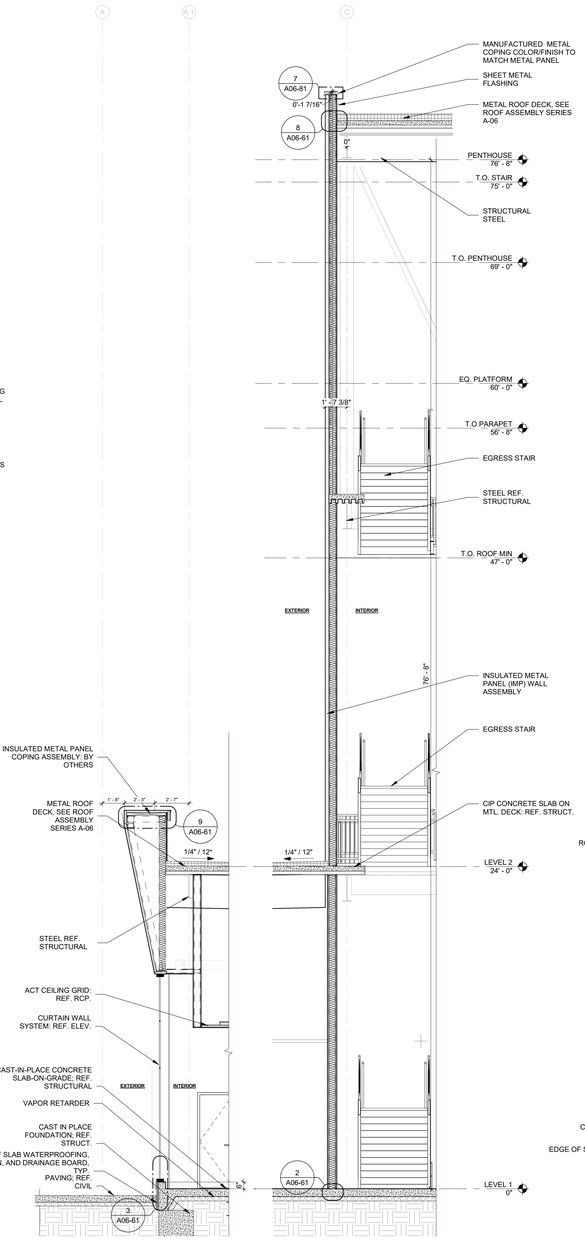

2 WALL SECTION - IMP FEATURE @ GLAZING
1/4" = 1'-0"

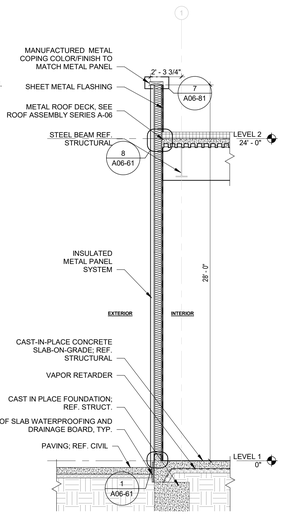

1 CONFERENCE ROOM
1/4" = 1'-0"

serverfarm
CORGAN
TGRWA
STRUCTURAL ENGINEERS
kW Mission Critical Engineering
Member of WSP
EP ENGINEERING PLUS
Kimley»Horn

ISSUES		
1	11/12/2025	CONCEPTUAL
2	12/12/2025	SCHEMATIC DESIGN
3	12/17/2025	STILL MILL ORDER
4	01/23/2026	DESIGN DEVELOPMENT
5		
6		
7		
8		
9		
10		
11		
12		
13		

REVISIONS		

This Document was produced by or under the authority of Registered Architect:

NOT FOR CONSTRUCTION

This document is incomplete and may not be used for regulatory approval, permit or construction.
Date of issue:
01/23/2026

ARK01
DESIGN DEVELOPMENT
CLARKSVILLE, AR 72830

WALL SECTIONS

JOB 25864
SHEET
A06-21

1/23/2026 2:43:58 PM A06-21 WALL SECTIONS