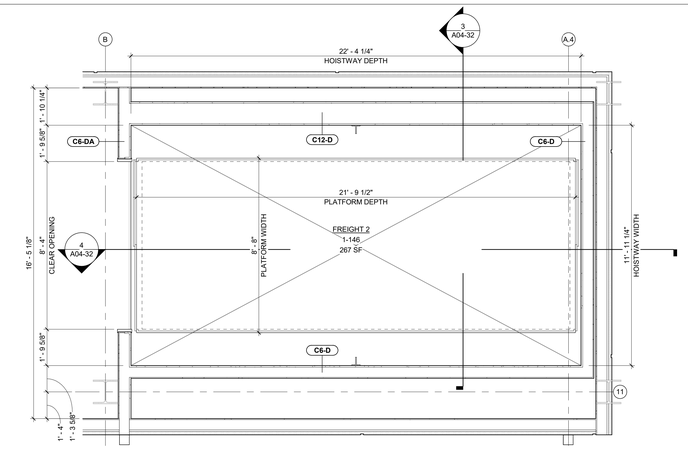

6 FREIGHT ELEVATORS - ENLARGED PLAN - PENTHOUSE
3/8" = 1'-0"

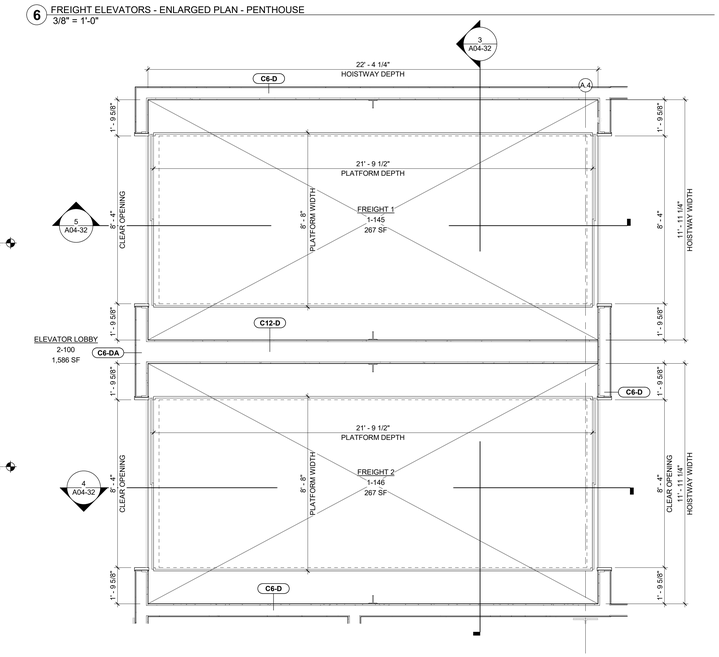

2 FREIGHT ELEVATORS - ENLARGED PLAN - LEVEL TWO
3/8" = 1'-0"

1 FREIGHT ELEVATORS - ENLARGED PLAN - LEVEL ONE
3/8" = 1'-0"

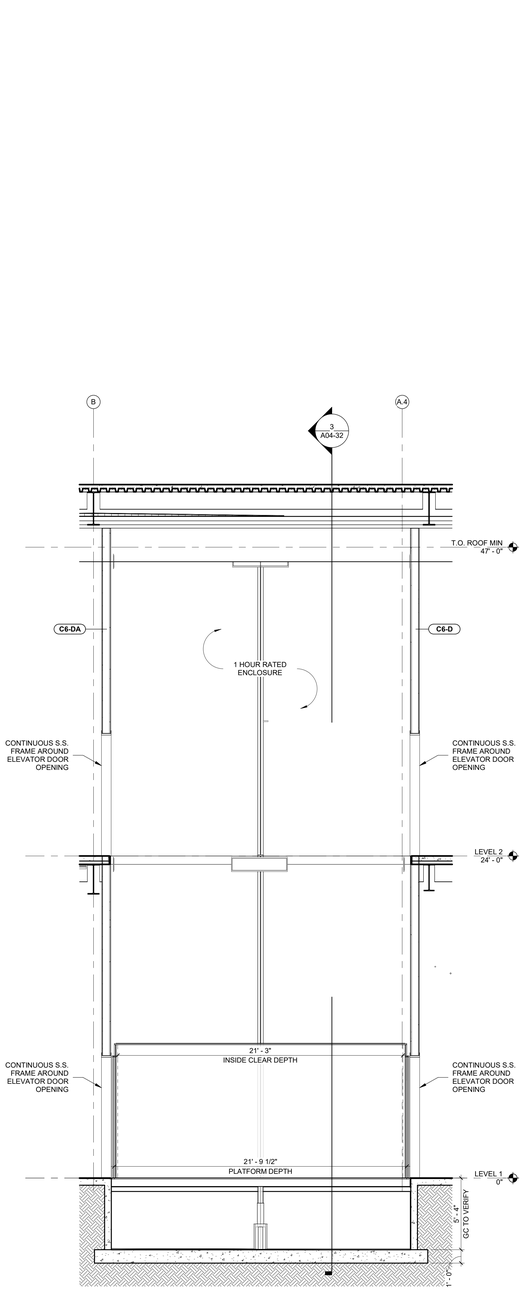

5 FREIGHT ELEVATOR - ENLARGED SECTION
1/4" = 1'-0"

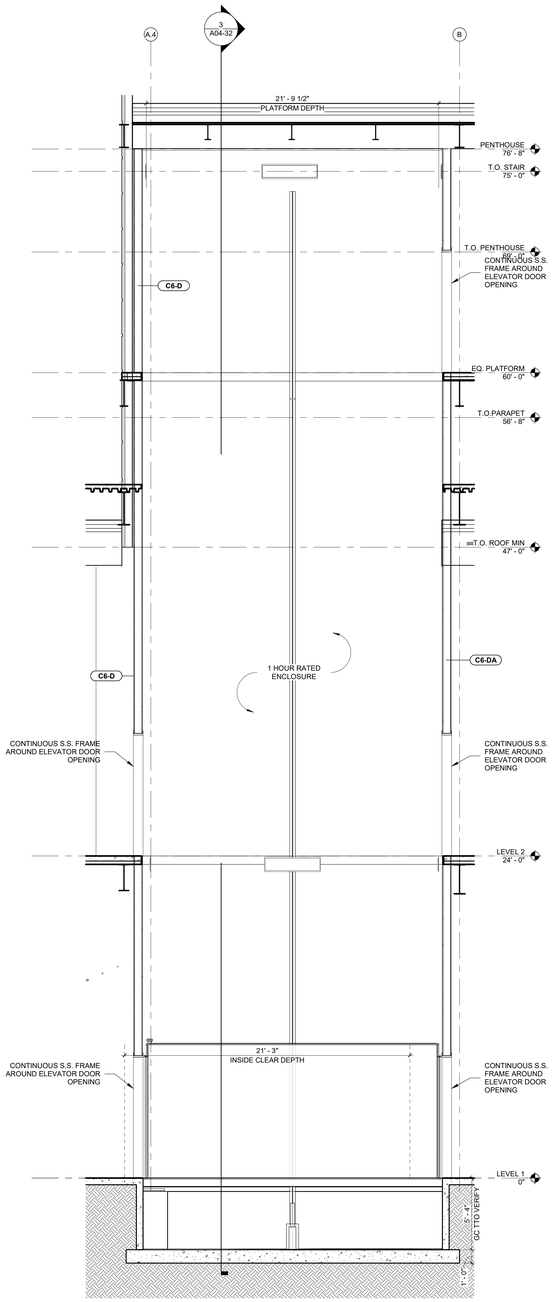

4 FREIGHT ELEVATOR - ENLARGED SECTION 2
1/4" = 1'-0"

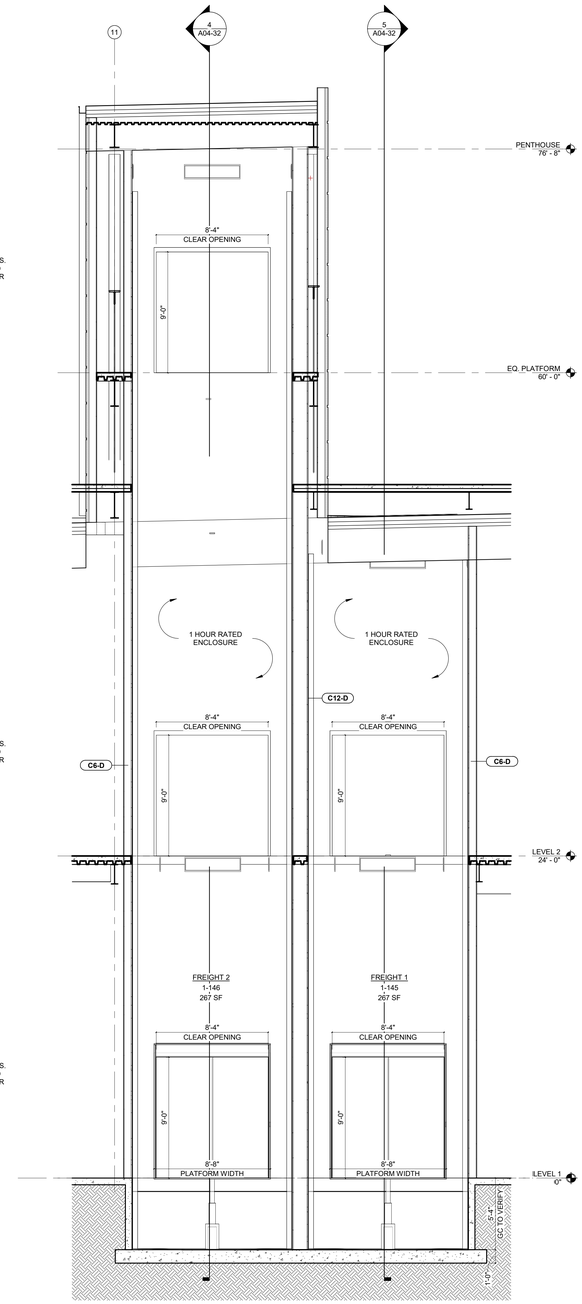

3 FREIGHT ELEVATOR - ENLARGED SECTION
1/4" = 1'-0"

serverfarm
CORGAN
TGRWA
STRUCTURAL ENGINEERS
kW Mission Critical Engineering
Member of WSP
EP ENGINEERING PLUS
Kimley»Horn

	ISSUES	
1	11/12/2025	CONCEPTUAL
2	12/12/2025	SCHEMATIC DESIGN
3	12/17/2025	STILL MILL ORDER
4	01/23/2026	DESIGN DEVELOPMENT
5		
6		
7		
8		
9		
10		
11		
12		
13		

REVISIONS

NOT FOR CONSTRUCTION

This document is incomplete and may not be used for regulatory approval, permit or construction.

Date of issue:
01/23/2026

ARK01
DESIGN DEVELOPMENT

CLARKSVILLE, AR 72830

L	K	J
G	E	C	A
H	F	D	B
P	N	M

VERTICAL CIRCULATION - FREIGHT ELEVATOR

JOB 25864

SHEET

A04-32

1/23/2026 2:42:43 PM A04-32 VERTICAL CIRCULATION - FREIGHT ELEVATOR