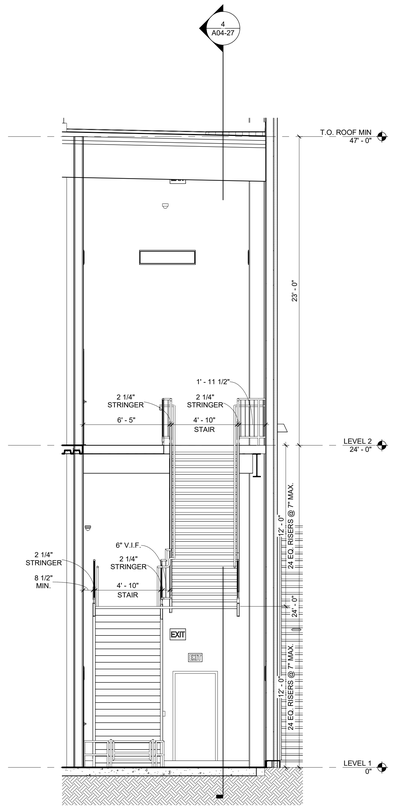

5 S07 - ENLARGED SECTION
1/4" = 1'-0"

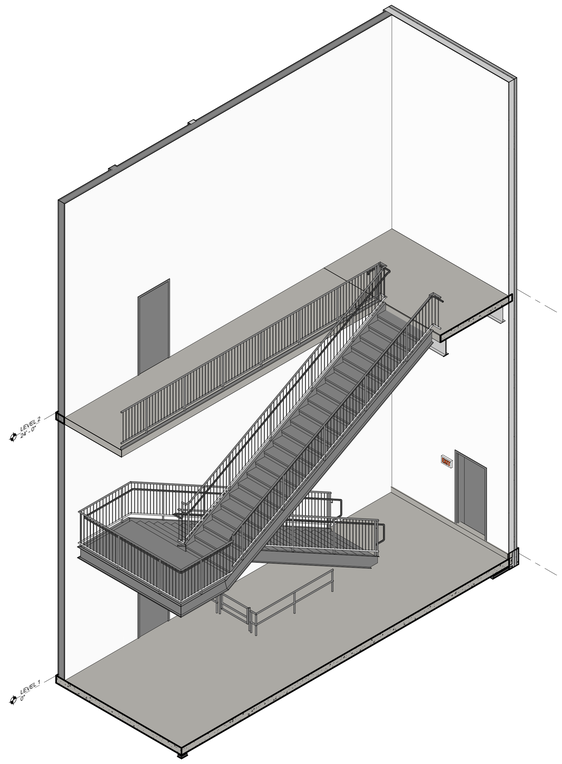

3 S07 STAIR - AXON

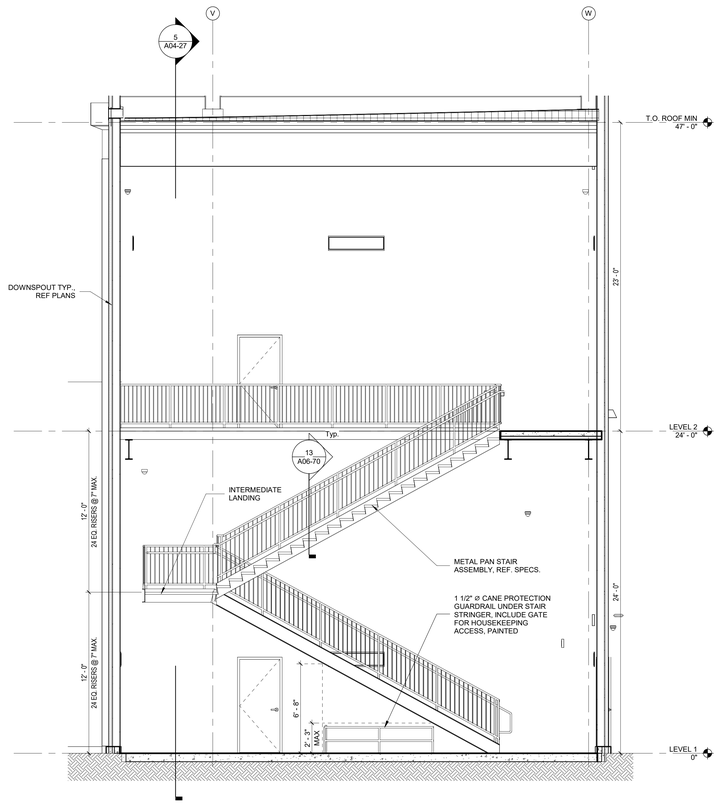

4 S07 - ENLARGED SECTION
1/4" = 1'-0"

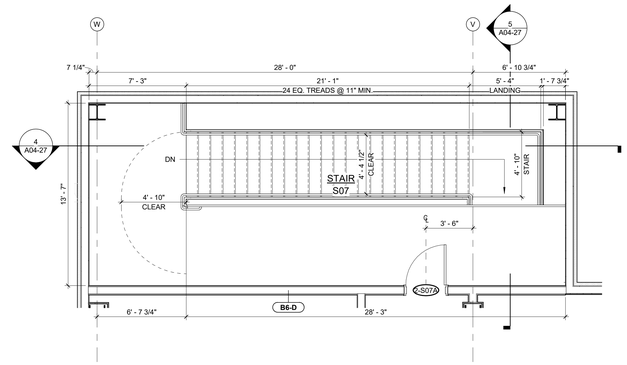

2 S07 - ENLARGED PLAN - LEVEL TWO
1/4" = 1'-0"

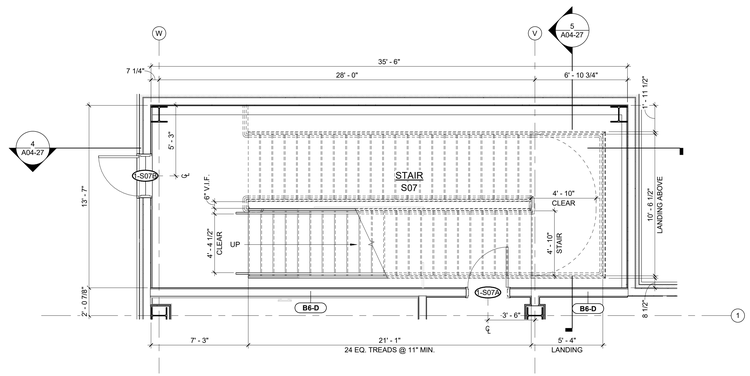

1 S07 - ENLARGED PLAN - LEVEL ONE
1/4" = 1'-0"

STAIR GENERAL NOTES

Delegated Design Submittal: Metal Grate Platforms Stairs and Rails indicated to comply with specification performance requirements and design criteria, including analysis data. Submission to be signed and sealed by the qualified professional engineer responsible for their preparation. Design Calculations for engineered stairs and secondary support members are required. Include attachments of all work of the stairs and secondary support and railing and guard systems to the building construction and structure.

FIRE & SMOKE WALL LEGEND

CODE REQUIRED:
*INDICATED IN COLOR

- UNRATED ASSEMBLY
- 1 HOUR RATED ASSEMBLY
- 2 HOUR RATED ASSEMBLY
- 2 HOUR RATED INTUMESCENT COATING

serverfarm
CORGAN
TGRWA STRUCTURAL ENGINEERS
kW Mission Critical Engineering Member of WSP
EP ENGINEERING PLUS
Kimley»Horn

ISSUES

1	11/12/2025	CONCEPTUAL
2	12/12/2025	SCHEMATIC DESIGN
3	12/17/2025	STILL MILL ORDER
4	01/23/2026	DESIGN DEVELOPMENT
5		
6		
7		
8		
9		
10		
11		
12		
13		

REVISIONS

NOT FOR CONSTRUCTION

This document is incomplete and may not be used for regulatory approval, permit or construction.
Date of issue:
01/23/2026

ARK01
DESIGN DEVELOPMENT
CLARKSVILLE, AR 72830

VERTICAL CIRCULATION - STAIR 07

JOB 25864
SHEET
A04-27

1/23/2026 2:42:17 PM A04-27 VERTICAL CIRCULATION - STAIR 07