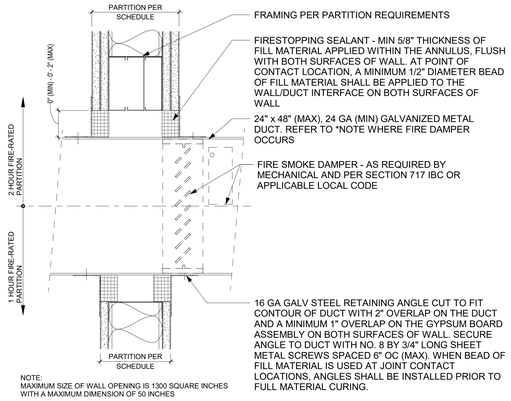

NOTE:
MAXIMUM SIZE OF WALL OPENING IS 1300 SQUARE INCHES WITH A MAXIMUM DIMENSION OF 50 INCHES

METAL DUCT *WITH/ WITHOUT FIRE DAMPER (UL DESIGN NO. W-L-7040)
TYPICAL AT ONE-HOUR AND TW0-HOUR METAL FRAMED GYPSUM BOARD PARTITIONS

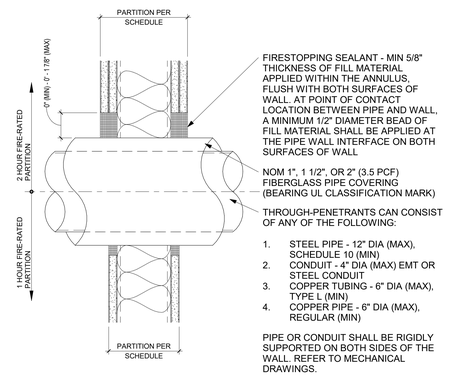

INSULATED PIPES (UL DESIGN NO. W-L-5029)

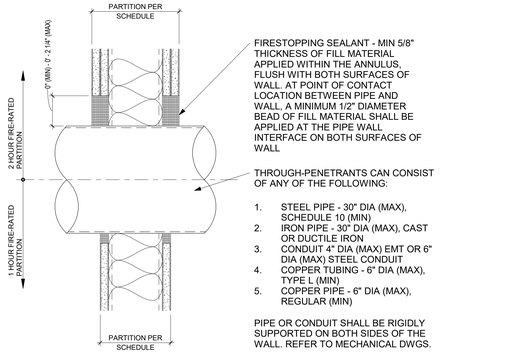

METAL PIPES OR CONDUITS (UL DESIGN NO. W-L-1054)

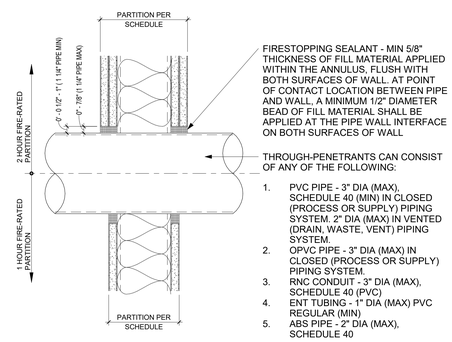

NON-METALLIC PIPES OR CONDUIT (UL DESIGN NO. W-L-2088 OR W-L-2474)

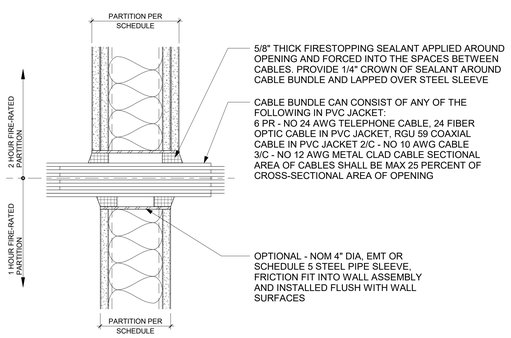

CABLE BUNDLE IN METALLIC SLEEVE (UL DESIGN NO. W-L-3111)

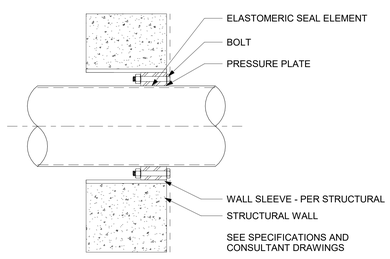

PENETRATION WITH WATER STOP AT CONCRETE WALL

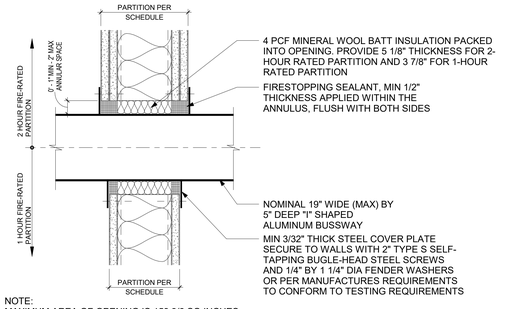

NOTE:
MAXIMUM AREA OF OPENING IS 158 3/8 SQ INCHES WITH A MAXIMUM DIMENSION OF 22 5/8 INCHES.

ELECTRICAL BUSSWAY (UL DESIGN NO. W-L-6001 OR W-L-6019)

1 TYP. WALL PENETRATION DETAILS
N.T.S.

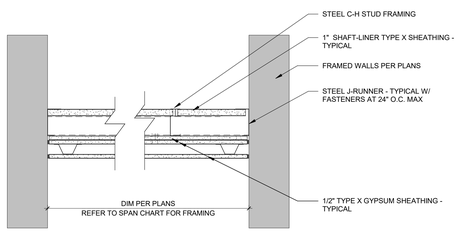

UL DESIGN K506
TUNNEL CEILING

TWO-HOUR HORIZONTAL MEMBRANE OR METAL DUCT ENCLOSURE
SPAN TABLE

(1/2") GYPSUM PANELS	MAXIMUM SPAN m (ft.)
212CH25-18	2.388 m (7' 10")
212CH20-34	2.946 m (9' 8")
400CH25-18	2.311 m (7' 7")
400CH20-34	4.267 m (14' 0")
600CH20-34	5.969 m (19' 7")

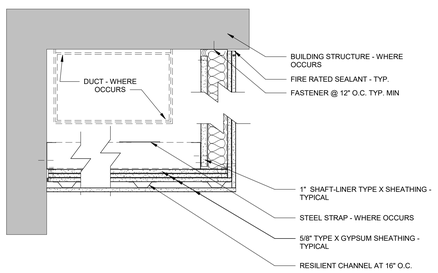

UL DESIGN K506

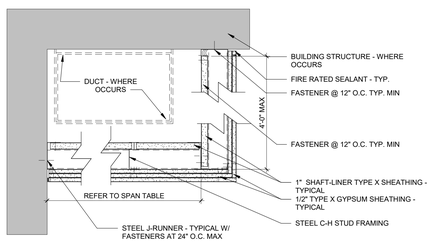

UL DESIGN K504

TWO-HOUR HORIZONTAL MEMBRANE OR METAL DUCT ENCLOSURE
SPAN TABLE

(1/2") GYPSUM PANELS	MAXIMUM SPAN m (ft.)
212CH25-18	1.956 m (6' 5")
212CH20-34	2.515 m (8' 3")
400CH25-18	2.591 m (8' 5")
400CH20-34	3.658 m (12' 0")
600CH20-34	4.165 m (13' 8")

2 HORIZONTAL SHAFT AND TUNNEL ASSEMBLIES
N.T.S.

serverfarm
CORGAN
TGRWA STRUCTURAL ENGINEERS
kW Mission Critical Engineering Member of WSP
EP ENGINEERING PLUS
Kimley»Horn

ISSUES

1	11/12/2025	CONCEPTUAL
2	12/12/2025	SCHEMATIC DESIGN
3	12/17/2025	STILL MILL ORDER
4	01/23/2026	DESIGN DEVELOPMENT
5		
6		
7		
8		
9		
10		
11		
12		
13		

REVISIONS

NOT FOR CONSTRUCTION

This document is incomplete and may not be used for regulatory approval, permit or construction.
Date of issue:
01/23/2026

ARK01
DESIGN DEVELOPMENT
CLARKSVILLE, AR 72830

PARTITION - PENETRATION DETAILS

JOB 25864
SHEET
A02-00D

1/23/2026 2:35:17 PM A02-00D PARTITION - PENETRATION DETAILS