NOTES:

1. ALL EXTERIOR STEEL FRAMING SHALL BE HOT-DIP GALVANIZED. REFER TO PROJECT SPECIFICATIONS AND EXTERIOR PAINTING SECTIONS FOR FINISH COAT REQUIREMENTS.

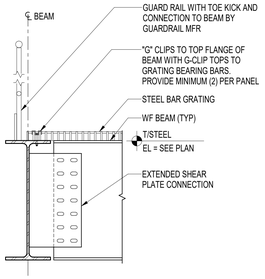

1 EQUIPMENT PLATFORM RAILING SECTION
SCALE: NTS

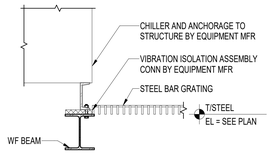

2 CHILLER TO WF BEAM SECTION
SCALE: NTS

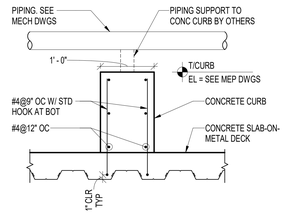

3 PIPING SUPPORT CONCRETE CURB SECTION
SCALE: NTS

NOTES:
1. PROVIDE CONCRETE CURBS AT 10'-0" MAXIMUM SPACING OR AS REQUIRED TO SUPPORT CHILLED WATER PIPING OUTSIDE OF THE EQUIPMENT PLATFORM. COORDINATE WITH MECHANICAL DRAWINGS.

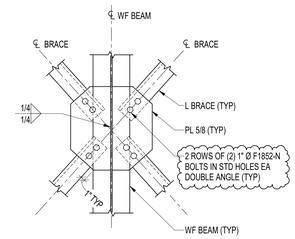

4 HORIZONTAL BRACING INTERSECTION DETAIL
SCALE: NTS

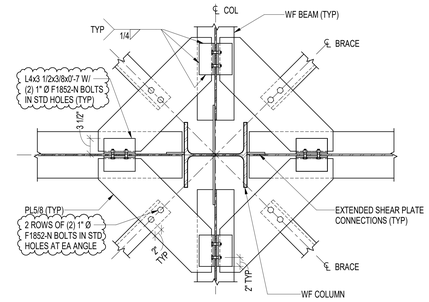

5 HORIZONTAL BRACING TO WF COLUMN CONNECTION
SCALE: NTS

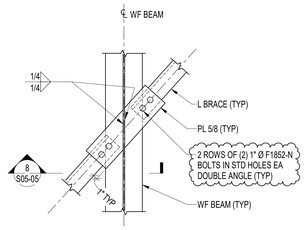

6 HORIZONTAL BRACING CONNECTION AT BEAMS
SCALE: NTS

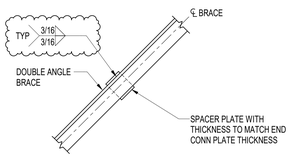

7 DOUBLE ANGLE BOLTING DETAIL
SCALE: NTS

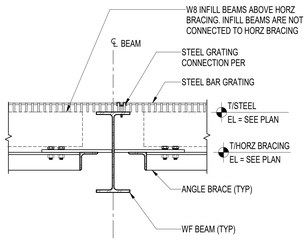

8 HORIZONTAL BRACING INTERSECTION DETAIL
SCALE: NTS

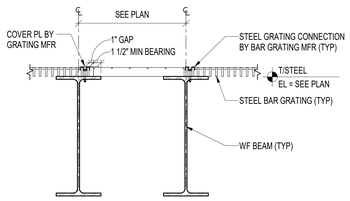

9 EQUIPMENT PLATFORM EXPANSION JOINT
SCALE: NTS
NOTE:
1. STEEL GRATING CONNECTION TO WF BEAM TO ALLOW FOR 1" LATERAL DEFLECTION FOR GRATING SPANNING BETWEEN BEAMS SHOWN IN DETAIL.

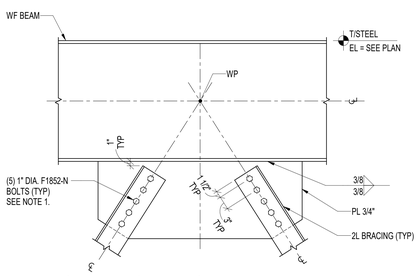

10 DOUBLE ANGLE BRACE DETAIL
SCALE: NTS
NOTES:
1. AT ELEVATOR OVERRUN LOCATIONS PROVIDE (3) BOLT CONNECTION.

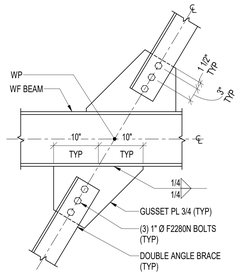

11 PENTHOUSE BRACE TO WF BEAM CONNECTION
SCALE: NTS

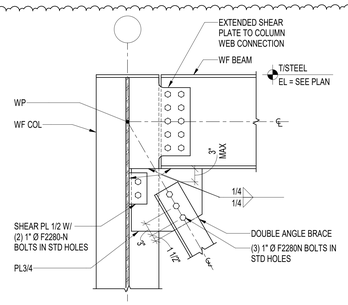

12 PENTHOUSE BRACE CONNECTION AT COLUMN WEB
SCALE: NTS

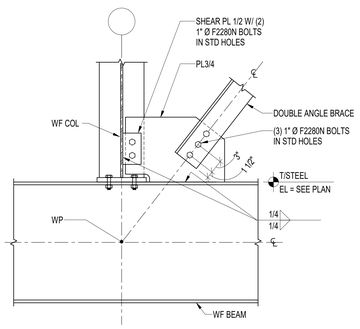

13 PENTHOUSE BRACE CONNECTION AT COLUMN WEB
SCALE: NTS

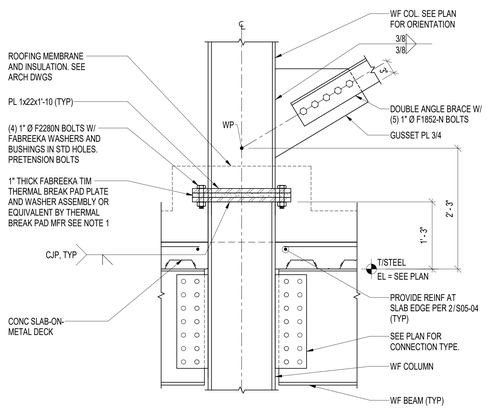

14 BRACE DETAIL AT THERMAL BREAK
SCALE: NTS
NOTES:
1. FILL GALVANIZING VENT AND DRAIN HOLES THAT ARE EXPOSED IN THE FINISHED WORK BY PLUGGING WITH ZINC SOLDER AND FILING OFF SMOOTH PRIOR TO EXPOSURE OF STEEL TO RAIN OR ANY OTHER FORMS OF WATER INFILTRATION.

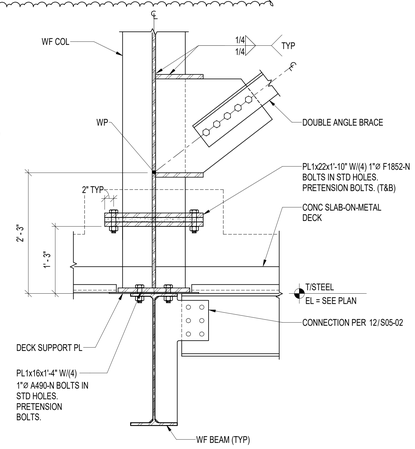

15 BRACE DETAIL AT THERMAL BREAK ABOVE BEAMS
SCALE: NTS
NOTES:
1. FOR INFORMATION NOT SHOWN SEE 14/S05-05

serverfarm
CORGAN
TGRWA STRUCTURAL ENGINEERS
kW Mission Critical Engineering Member of WSP
EP ENGINEERING PLUS
Kimley»Horn

ISSUES		
1		
2		
3	12/17/2025	STEEL MILL ORDER
4	01/23/2026	DESIGN DEVELOPMENT
5		
6		
7		
8		
9		
10		
11		
12		
13		

REVISIONS

NOT FOR CONSTRUCTION

This document is incomplete and may not be used for regulatory approval, permit or construction.
Date of issue:
01/23/2026

SF - ARK01
DESIGN DEVELOPMENT
CLARKSVILLE, AR 72830

EQUIPMENT PLATFORM STEEL DETAILS

JOB 25131
SHEET
S05-05

1/22/2026 4:23:05 PM S05-05 EQUIPMENT PLATFORM STEEL DETAILS