T/PENTHOUSE																								T/PENTHOUSE
78' - 6" T/SCREENWALL																								78' - 6" T/SCREENWALL
70' - 10" EQUIPMENT PLATFORM				W14x90	W14x90	W12x65								W14x90	W14x90									70' - 10" EQUIPMENT PLATFORM
60' - 0" ROOF											W18x31	W12x65				W14x60			W14x60	W14x60		W14x60		60' - 0" ROOF
51' - 8" LEVEL 02	W14x90				W14x90	W14x109		W14x145	W14x145	W14x109	W14x109			W14x109		W14x109	W14x176	W14x145	W14x176	W14x145	W14x193	W14x193		51' - 8" LEVEL 02
24' - 0" LEVEL 01		W14x53	W14x61																					24' - 0" LEVEL 01
0' - 0"	BP2	BP2	BP2		BP2	BP2		BP3	BP4		BP2			BP2		BP1	BP1	BP1	BP1	BP1	BP1	BP1		0' - 0"
Column Locations	A-9, A-10, A-11, A-12, A-13, A.4-9, A.4-10, A.4-11, A.4-12, A.4(-5' - 9")-13, B-9, B-10, B-12, B-13, C-2, C-3, C-4, C-10, C-12, E-1, E-13, F-1, F-13, G-1, G-13, H-1, H-13, R-1, R-13, S-1, S-13, T-1, T-13, U-1, U-13, U.9-1', U.9-14, V-1, V-13, W-1, W-1', W-2, W-3, W-4, W-10, W-11, W-12, W-13, W-14	A.1-1, A.1-2, A.1-3, A.1-4, A.1-5, A.1-6, A.1-7, A.1-8, A.4-1, B-1	A.4-2, A.4-3, A.4-4, A.4-5, A.4-6, A.4-7, A.4-8, B-2, B-3, B-4, B-5, B-6, B-7, B-8	A.4(2' - 0")-10.6, A.4(2' - 0")-11, B-10.6, C-10.6	B-11, C-11	C-1	C-1.8, C.2-12.2, C.2-13, C.7-1, C.7-1.8, C.7-12.2, C.7-13	C-5, C-9, J-1, J-13, Q-1, Q-6, Q-8, Q-13, W-5, W-9	C-6, C-7, C-8, W-6, W-7, W-8	C-13	C.2(-1' - 6")-10.6, C.2(-1' - 6")-11	D-1, D-13	D(-6' - 0")-1, D(-6' - 0")-13	D-1.5, D-12.5, E-1.5, E-12.5, F-1.5, F-12.5, G-1.5, G-12.5, H-1.5, H-12.5, H.9-1.5, H.9-12.5, J-1.5, J-12.5, K-1.5, K-12.5, L-1.5, L-12.5, M-1.5, M-12.5, N-1.5, N-12.5, P-1.5, P-12.5, Q-1.5, Q-12.5, Q.1-1.5, Q.1-12.5, R-1.5, R-12.5, S-1.5, S-12.5, T-1.5, T-12.5, U-1.5, U-12.5, V-1.5, V-12.5, V.9-1.5, V.9-2, V.9-3, V.9-4, V.9-5, V.9-9, V.9-10, V.9-11, V.9-12, V.9-12.5	D-2, D-3, D-4, D-5, D-9, D-10, D-11, D-12	D-2.5, D-3.5, D-10.5, D-11.5, E-2.5, E-3.5, E-10.5, E-11.5, H-2.5, H-3.5, H-10.5, H-11.5, H.9-2, H.9-2.5, H.9-3, H.9-3.5, H.9-4, H.9-5, H.9-8, H.9-10, H.9-10.5, H.9-11, H.9-11.5, H.9-12, J-2.5, J-3.5, J-10.5, J-11.5, K-2.5, K-3.5, K-10.5, K-11.5, N-2.5, N-3.5, N-10.5, N-11.5, P-2.5, P-3.5, P-10.5, P-11.5, Q-1.2, Q.1-3, Q.1-4, Q.1-5, Q.1-9, Q.1-10, Q.1-11, Q.1-12, R-2.5, R-3.5, R-10.5, R-11.5, S-2.5, S-3.5, S-10.5, S-11.5, U-2.5, U-3.5, U-10.5, U-11.5, V-2.5, V-3.5, V-10.5, V-11.5	D-6, D-7, D-8	E-2, E-4, E-5, E-9, E-10, E-12, F-3, F-11, G-3, G-11, H-3, H-11, J-3, K-3, K-4, K-5, K-9, K-10, L-3, M-3, M-5, M-11, N-3, N-11, R-3, R-4, R-5, R-9, R-10, R-11, S-3, S-11, T-3, T-11, U-3, U-11, V-3, V-4, V-5, V-9, V-10, V-11	E-3, E-11, J-11, K-2, K-11, K-12, L-11, P-2, P-3, P-4, P-5, P-9, P-10, P-11, P-12, Q-3, Q-11, R-2, R-12, V-2, V-12	E-6, E-8, J-7, K-6, K-8, R-6, R-8, T-6, U-6, V-6, V-7, V-8	E-7, F-7, G-7, H-7, P-6, P-8, Q-7, R-7, S-7, T-7, U-7	F-2, F-4, F-5, F-9, F-10, F-12, G-2, G-4, G-5, G-9, G-10, G-12, H-2, H-4, H-5, H-9, H-10, H-12, L-2, L-4, L-5, L-9, L-10, L-12, M-2, M-4, M-9, M-10, M-12, N-2, N-4, N-5, N-9, N-10, N-12, S-2, S-4, S-5, S-9, S-10, S-12, T-2, T-4, T-5, T-9, T-10, T-12, U-2, U-4, U-5, U-9, U-10, U-12	F-6, F-8, G-6, G-8, H-6, H-8, L-6, L-8, M-6, M-8, N-6, N-8, S-6, S-8, T-8, U-8	

T/PENTHOUSE								T/PENTHOUSE
78' - 6" T/SCREENWALL								78' - 6" T/SCREENWALL
70' - 10" EQUIPMENT PLATFORM								70' - 10" EQUIPMENT PLATFORM
60' - 0" ROOF	W14x69	W14x69	W14x69				W14x69	60' - 0" ROOF
51' - 8" LEVEL 02	W14x145	W14x176	W14x176	W14x176	W14x145	W14x176	W14x145	51' - 8" LEVEL 02
24' - 0" LEVEL 01								24' - 0" LEVEL 01
0' - 0"	BP3	BP3	BP4	BP3	BP5	BP4	BP4	0' - 0"
Column Locations	J-2, J-12, Q-2, Q-4, Q-10, Q-12	J-4, J-10	J-5, J-9	J-6, J-8	K-1, K-7, K-13, P-1, P-7, P-13	L-1, L-7, L-13, M-1, M-7, M-13, N-1, N-7, N-13	Q-5, Q-9	

BASE PLATE SCHEDULE

MARK	"t" THICKNESS	"W" WIDTH	"L" LENGTH	WELD SIZE "A"	ANCHOR ROD QUANTITY & DIA	ANCHOR ROD GRADE	"E" ANCHOR ROD EMBEDMENT	WASHER PLATE	WELD SIZE "B"	DETAIL REFERENCE
BP1	2 1/4"	24"	2' - 0"	5/16"	(4) 1"	GR 36	12"	-	-	1/S05-01
BP2	1 3/4"	24"	2' - 0"	5/16"	(4) 1"	GR 36	12"	-	-	1/S05-01
BP3	2 1/2"	26"	4' - 0"	1/2"	(6) 2 1/2"	GR 105	36"	5/8x5-3/4x0'-5 3/4	1/2	5/S05-03
BP4	2 1/2"	26"	4' - 10"	1/2"	(10) 2 1/2"	GR 105	36"	5/8x5-3/4x0'-5 3/4	1/2	6/S05-03
BP5	2 1/2"	26"	4' - 10"	1/2"	(10) 2 1/2"	GR 105	36"	5/8x5-3/4x0'-5 3/4	1/2	7/S05-03

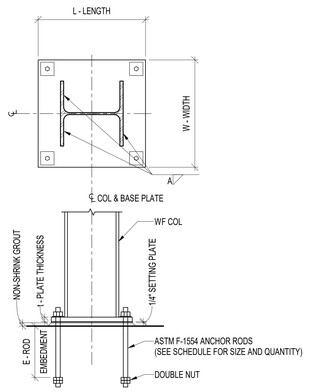

1 WF COLUMN BASE DETAIL
SCALE: NTS
NOTES:
1. SEE BASE PLATE SCHEDULE FOR A, E, t, W, & L VALUES

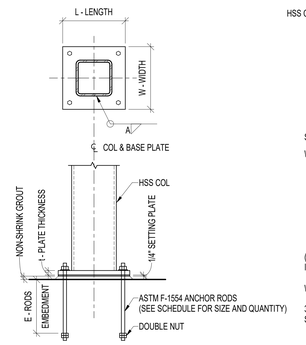

2 HSS COLUMN BASE DETAIL
SCALE: NTS
NOTES:
1. SEE BASE PLATE SCHEDULE FOR A, E, t, W, & L VALUES

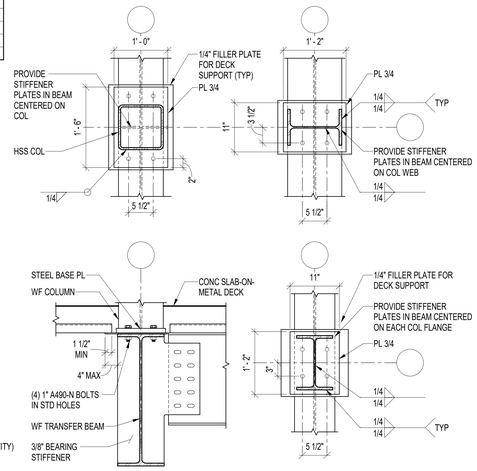

3 WF COLUMN TO WF TRANSFER BEAM
SCALE: NTS

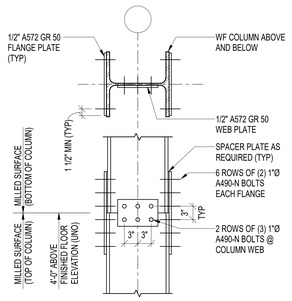

4 TYPICAL STEEL COLUMN SPLICE DETAIL
SCALE: NTS

serverfarm
CORGAN
TGRWA STRUCTURAL ENGINEERS
kW Mission Critical Engineering Member of WSP
EP ENGINEERING PLUS
Kimley»Horn

ISSUES		
1		
2		
3	12/17/2025	STEEL MILL ORDER
4	01/23/2026	DESIGN DEVELOPMENT
5		
6		
7		
8		
9		
10		
11		
12		
13		

REVISIONS

NOT FOR CONSTRUCTION

This document is incomplete and may not be used for regulatory approval, permit or construction.
Date of issue: 01/23/2026

SF - ARK01
DESIGN DEVELOPMENT
CLARKSVILLE, AR 72830

STEEL COLUMN SCHEDULE & DETAILS

JOB 25131
SHEET S05-01

1/22/2026 4:22:56 PM S05-01 STEEL COLUMN SCHEDULE & DETAILS