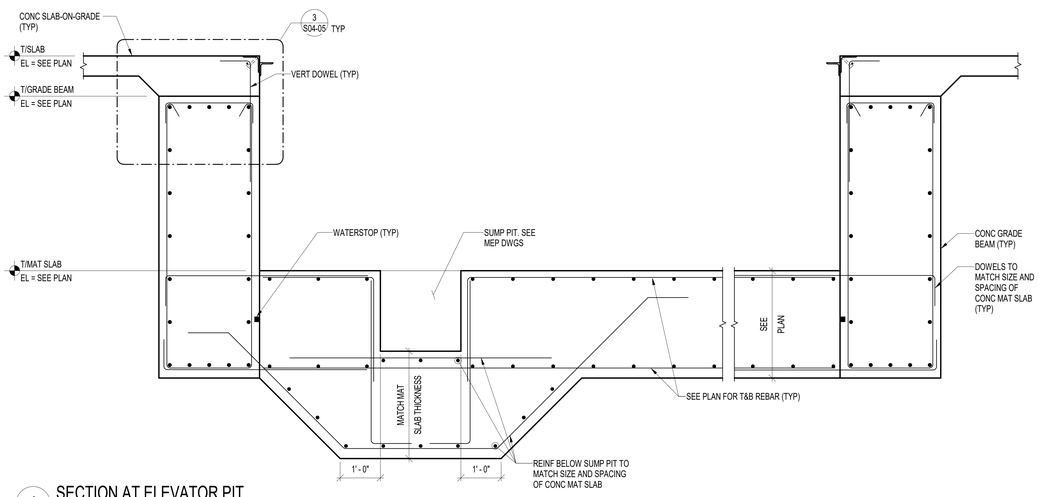

1 SECTION AT ELEVATOR PIT
SCALE: NTS

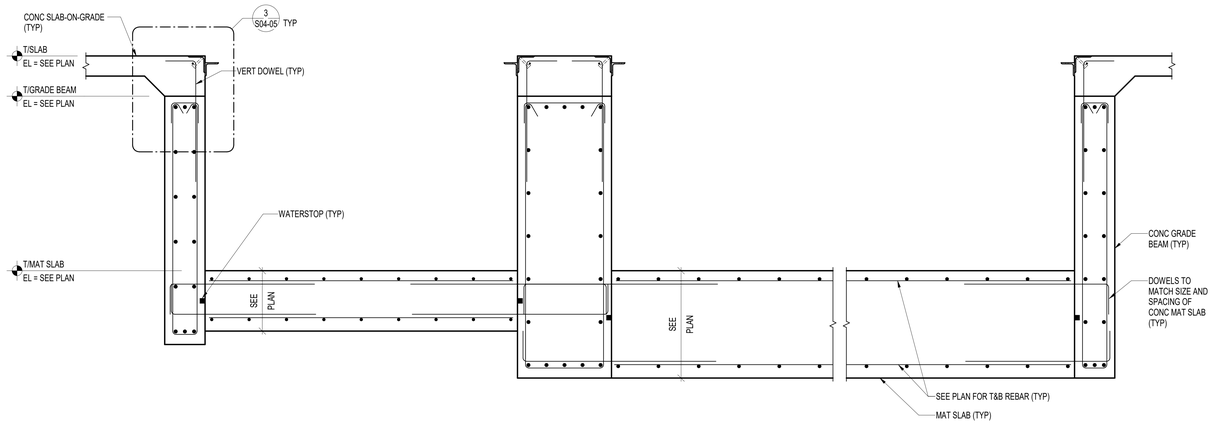

2 SECTION AT ELEVATOR PIT
SCALE: NTS

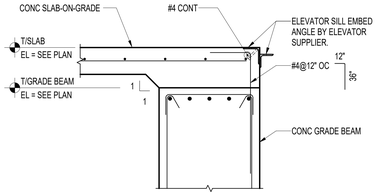

3 DETAIL AT ELEVATOR SILL
SCALE: NTS

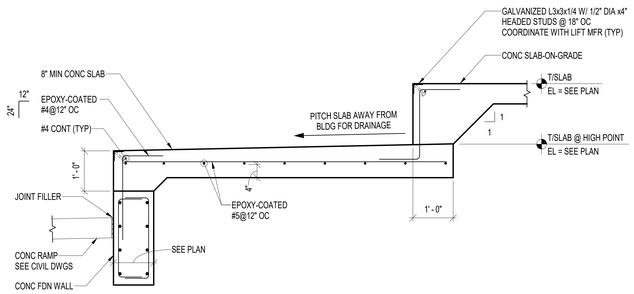

4 SECTION AT LOADING DOCK
SCALE: NTS

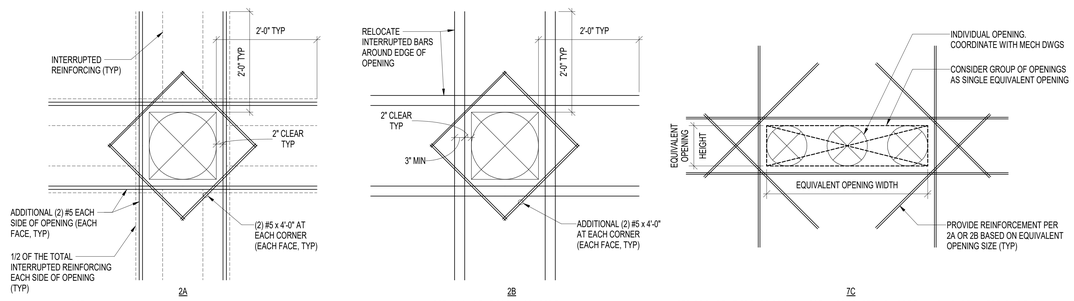

NOTE:
1. PROVIDE AT OPENINGS GREATER THAN 18", BUT LESS THAN 36".

NOTE: PROVIDE AT OPENINGS LESS THAN 18"

NOTE: PROVIDE AT GROUPS OF SMALL OPENINGS SPACED NO MORE THAN "D" APART, WHERE "D" IS THE MAXIMUM SIZE OF ANY INDIVIDUAL OPENING IN THE GROUP. WHERE SPACING BETWEEN INDIVIDUAL OPENINGS EXCEEDS "D", REINFORCE EACH OPENING INDIVIDUALLY ACCORDING TO 2A OR 2B

5 ADDITIONAL REINFORCEMENT AT CONCRETE WALL OPENINGS
SCALE: NTS

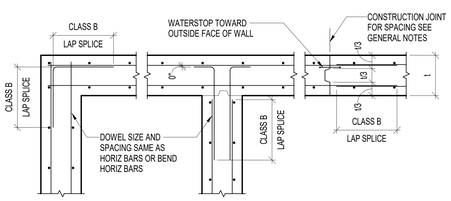

6 TYPICAL CONCRETE WALL CORNERS INTERSECTIONS AND CONSTRUCTION DETAIL
SCALE: NTS

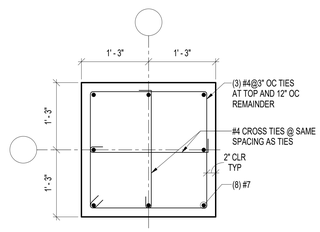

7 PIER P1 REINFORCING DETAIL
SCALE: NTS

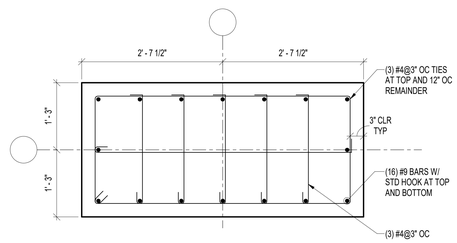

8 PIER P2 REINFORCING DETAIL
SCALE: NTS

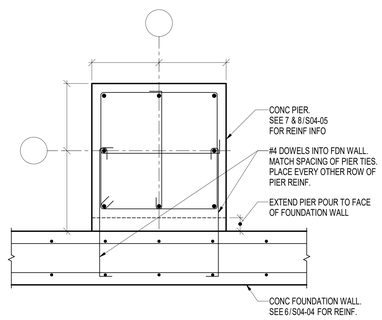

9 TYPICAL EXTENDED PIER AT FOUNDATION WALL DETAIL
SCALE: NTS

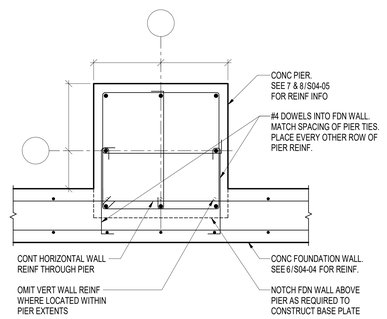

10 TYPICAL EXTENDED PIER INTEGRAL WITH FOUNDATION WALL DETAIL
SCALE: NTS

serverfarm
CORGAN
TGRWA STRUCTURAL ENGINEERS
kW Mission Critical Engineering Member of WSP
EP ENGINEERING PLUS
Kimley»Horn

ISSUES		
1		
2		
3		
4	01/23/2026	DESIGN DEVELOPMENT
5		
6		
7		
8		
9		
10		
11		
12		
13		

REVISIONS

NOT FOR CONSTRUCTION

This document is incomplete and may not be used for regulatory approval, permit or construction.
Date of issue:
01/23/2026

SF - ARK01
DESIGN DEVELOPMENT
CLARKSVILLE, AR 72830

FOUNDATION DETAILS

JOB 25131
SHEET
S04-05

1/22/2026 4:22:53 PM S04-05 FOUNDATION DETAILS