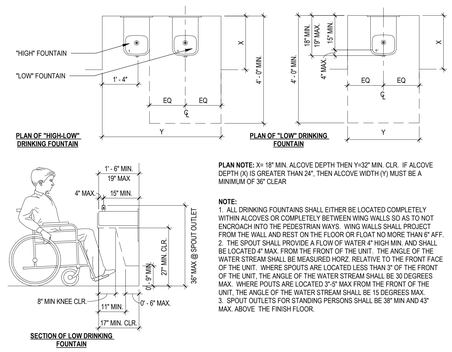

PLAN NOTE: X= 18" MIN. ALCOVE DEPTH THEN Y=32" MIN. CLR. IF ALCOVE DEPTH (X) IS GREATER THAN 24", THEN ALCOVE WIDTH (Y) MUST BE A MINIMUM OF 36" CLEAR

NOTE:
1. ALL DRINKING FOUNTAINS SHALL EITHER BE LOCATED COMPLETELY WITHIN ALCOVES OR COMPLETELY BETWEEN WING WALLS SO AS TO NOT ENCROACH INTO THE PEDESTRIAN WAYS. WING WALLS SHALL PROJECT FROM THE WALL AND REST ON THE FLOOR OR FLOAT NO MORE THAN 6" AFF.
2. THE SPOUT SHALL PROVIDE A FLOW OF WATER 4" HIGH MIN. AND SHALL BE LOCATED 4" MAX. FROM THE FRONT OF THE UNIT. THE ANGLE OF THE WATER STREAM SHALL BE MEASURED HORIZ. RELATIVE TO THE FRONT FACE OF THE UNIT. WHERE SPOUTS ARE LOCATED LESS THAN 3" OF THE FRONT OF THE UNIT, THE ANGLE OF THE WATER STREAM SHALL BE 30 DEGREES MAX. WHERE POUTS ARE LOCATED 3"-5" MAX FROM THE FRONT OF THE UNIT, THE ANGLE OF THE WATER STREAM SHALL BE 15 DEGREES MAX.
3. SPOUT OUTLETS FOR STANDING PERSONS SHALL BE 38" MIN AND 43" MAX. ABOVE THE FINISH FLOOR.

12 ACCESSIBLE DRINKING FOUNTAIN - ANSI A 117.1 SEC 602
1/2" = 1'-0"

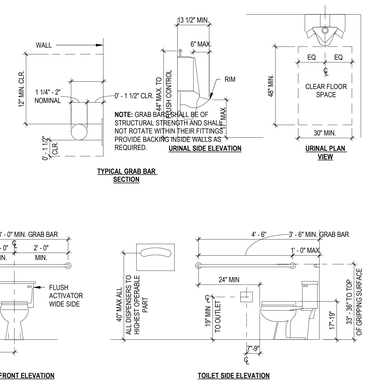

8 ACCESSIBLE TOILET, URINAL, AND GRAB BAR - ANSI A 117.1 SEC 604, 605, 609
1/2" = 1'-0"

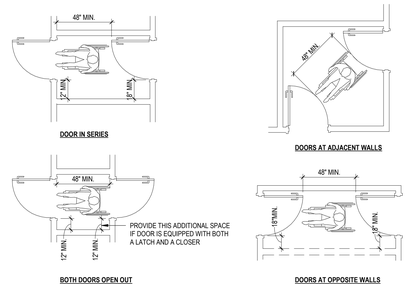

NOTES: FOR DOORS SERVING OTHER THAN A REQUIRED EXIT STAIRWAY

4 ACCESSIBLE VESTIBULES - ANSI A 117.1 SEC 404.2.3.2, 404.2.5
1/4" = 1'-0"

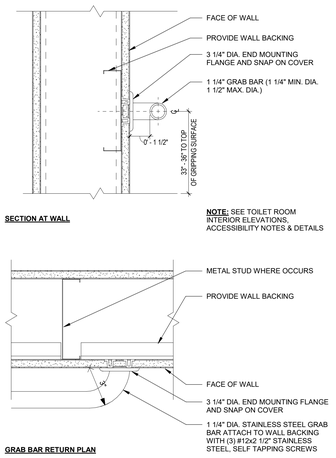

15 TYPICAL GRAB BAR - INSTALLATION DETAIL
3" = 1'-0"

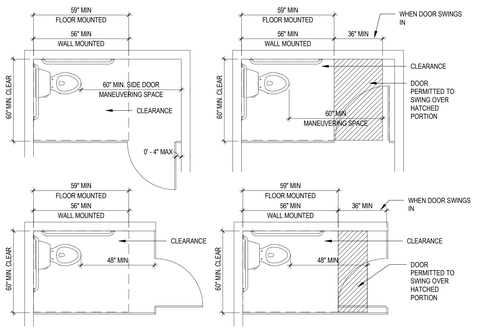

11 ACCESSIBLE COMPARTMENTS - ANSI A 117.1 SEC 604.9
1 : 40

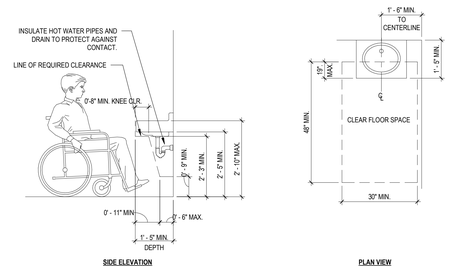

7 ACCESSIBLE LAVATORY - ANSI A 117.1 SEC 606
1/2" = 1'-0"

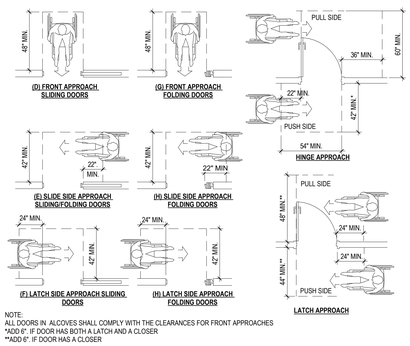

NOTE:
ALL DOORS IN. ALCOVES SHALL COMPLY WITH THE CLEARANCES FOR FRONT APPROACHES
*ADD 6". IF DOOR HAS BOTH A LATCH AND A CLOSER
**ADD 6". IF DOOR HAS A CLOSER

3 ACCESSIBLE DOOR CLEARANCES - SIDE APPROACH - ANSI A 117.1 SEC 404.2
1/4" = 1'-0"

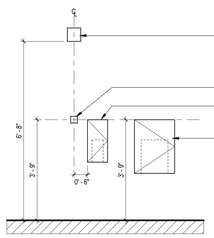

14 TYPICAL ACCESSIBLE MOUNTING HEIGHTS - FEC, AED, STROBES, FA, PULLS - ANSI A 117.1 SEC 308, 309
1/2" = 1'-0"

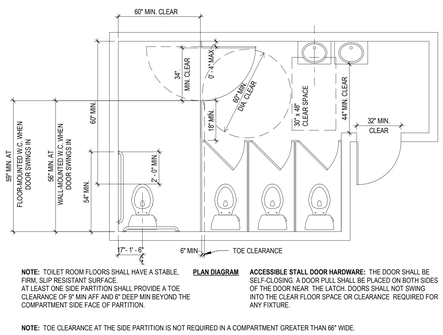

10 ACCESSIBLE MULTI-ACCOMMODATION TOILET - ANSI A 117.1 SEC 603, 604
1 : 40

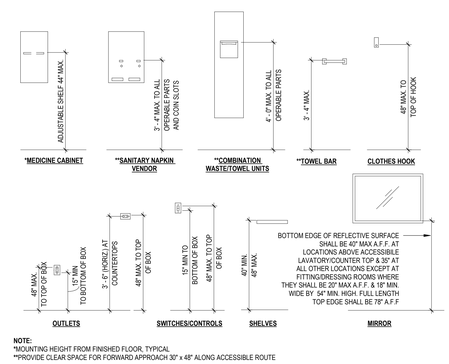

6 ACCESSIBLE ACCESSORIES - ANSI A 117.1 SEC 308, 309, 603.3, 603.4
1/2" = 1'-0"

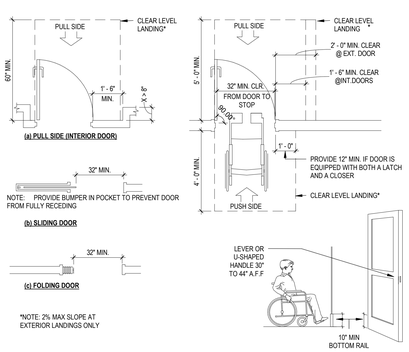

2 ACCESSIBILITY DOOR CLEARANCES - FRONT APPROACH - ANSI A 117.1 SEC 404.2
3/8" = 1'-0"

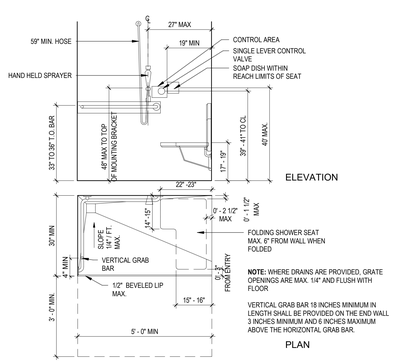

13 ACCESSIBLE ROLL-IN-SHOWER - ANSI A 117.1 SEC 608
1/2" = 1'-0"

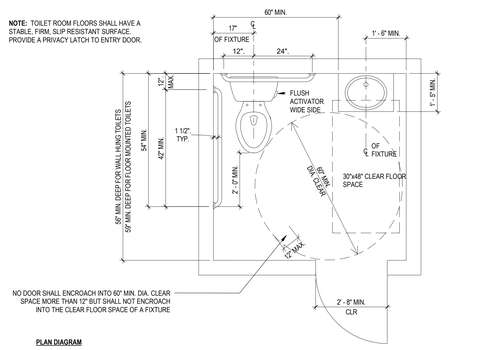

9 ACCESSIBLE SINGLE ACCOMODATION TOILET - ANSI A 117.1 SEC 604
1/2" = 1'-0"

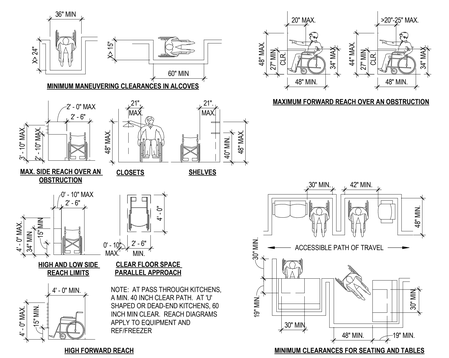

5 ACCESSIBLE MINIMUM REACH - ANSI A 117.1 SEC 308
1 : 70

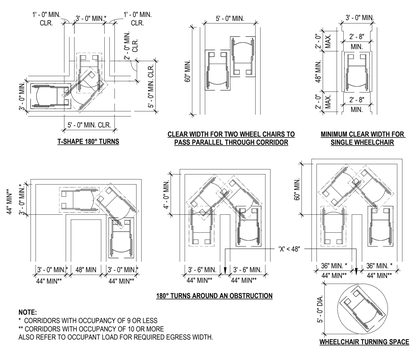

1 ACCESSIBILITY CORRIDORS AND TURNING - ANSI A 117.1 SEC 304, 305, 403.5
3/16" = 1'-0"

serverfarm
CORGAN
TGRWA STRUCTURAL ENGINEERS
kW Mission Critical Engineering Member of WSP
EP ENGINEERING PLUS
Kimley»Horn

ISSUES		
1	11/12/2025	CONCEPTUAL
2	12/12/2025	SCHEMATIC DESIGN
3	12/17/2025	STILL MILL ORDER
4	01/23/2026	DESIGN DEVELOPMENT
5		
6		
7		
8		
9		
10		
11		
12		
13		

REVISIONS

NOT FOR CONSTRUCTION

This document is incomplete and may not be used for regulatory approval, permit or construction.
Date of issue:
01/23/2026

ARK01
DESIGN DEVELOPMENT
CLARKSVILLE, AR 72830

ACCESSIBILITY STANDARDS

JOB 25864
SHEET
G00-21

1/23/2026 2:32:25 PM G00-21 ACCESSIBILITY STANDARDS