WILLIAM THOMAS MOORE, AIA
ARCHITECT
1300 East 6th Street
Little Rock, Arkansas 72202
501-372-2900

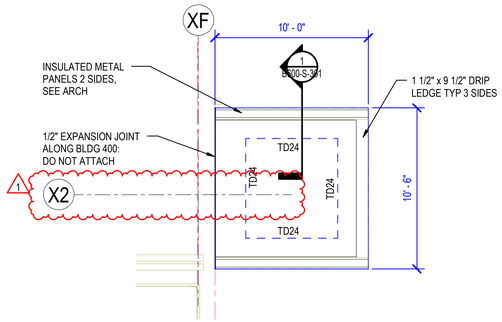

1 COMPRESSOR SHED FOUNDATION PLAN
1/4" = 1'-0"

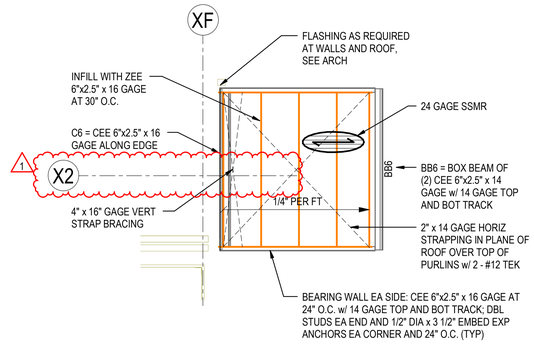

2 COMPRESSOR SHED FRAMING PLAN
1/4" = 1'-0"

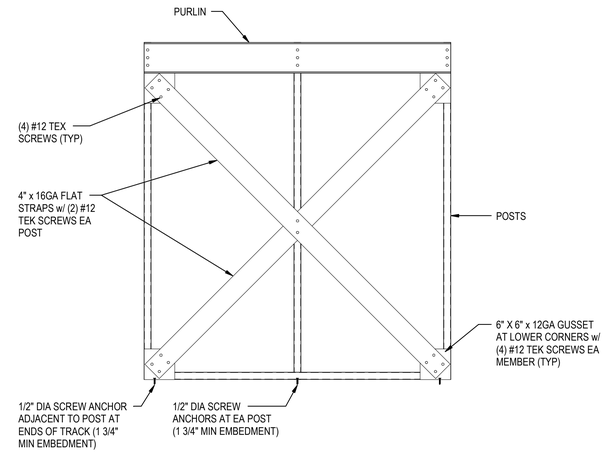

3 X-BRACING (PARALLEL TO ROOF PURLINS
1" = 1'-0"

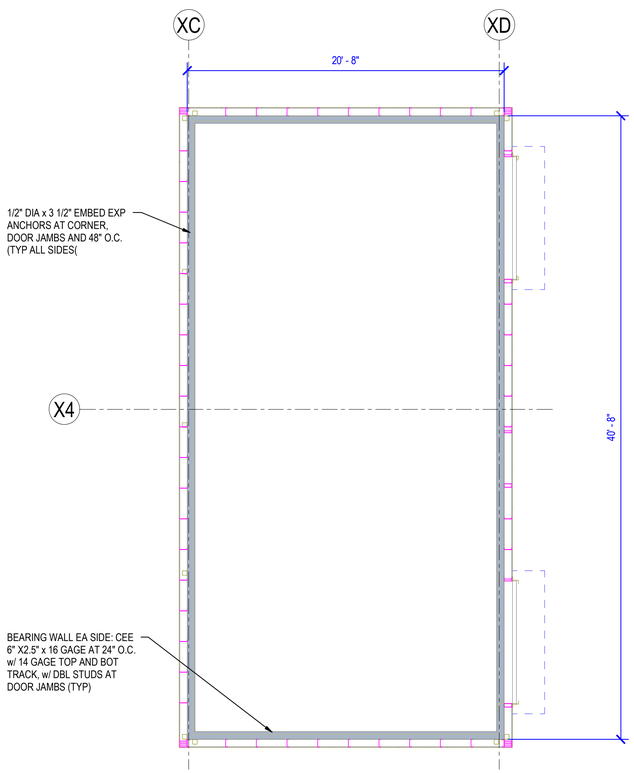

4 DEHUMIDIFYING AREA FOUNDATION PLAN
1/4" = 1'-0"

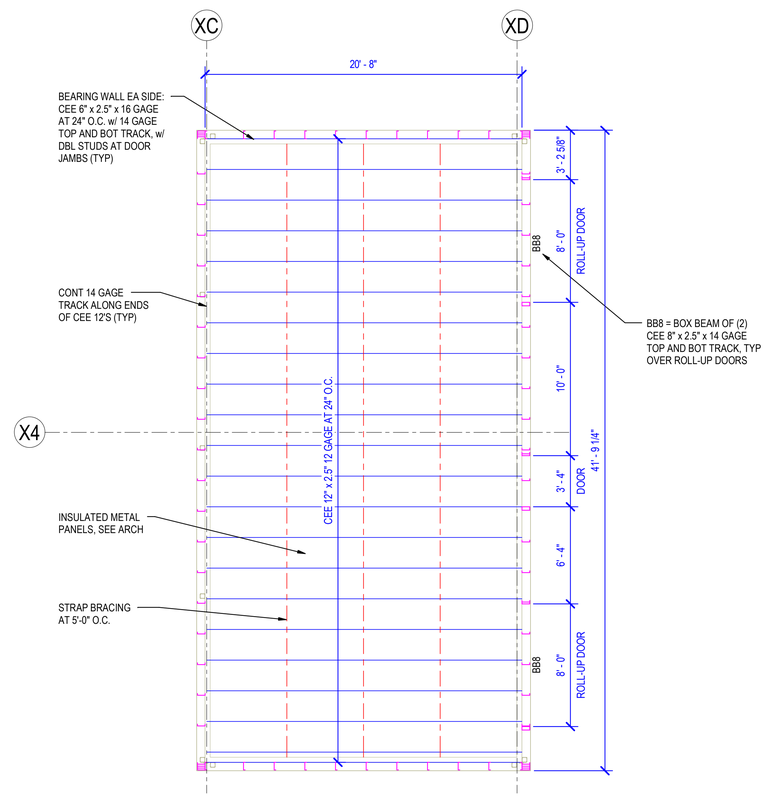

5 DEHUMIDIFYING AREA FRAMING PLAN
1/4" = 1'-0"

Project

Anduril Industries - McHenry, MS
Rocket Motor Systems
Additions and Renovations to Buildings 300, 301, 302, 400, and 600 - McHenry, Mississippi

Design Phase

CONSTRUCTION DOCUMENTS

Revisions

No.	Date	Description
1	11-21-2024	RB 013

Stamp

PAUL D. FLEMING
ENGINEER
9465
STATE OF MISSISSIPPI
10-26-2023

Notes

1. CROMWELL ARCHITECTS ENGINEERS, INC. ALL RIGHTS RESERVED
2. THIS SHEET DESIGNED FOR COLOR PRINTING. CRITICAL INFORMATION MAY BE LOST WITH BLACK AND WHITE PRINTING.

Project Number: 2023-047

Issue Date: 10-26-2023

Sheet Title: ENLARGED PLANS AT COMPRESSOR SHED AND DEHUMIDIFYING AREA

Sheet Number: B600-S-101.2