WILLIAM THOMAS MOORE, AIA
ARCHITECT
1300 East 6th Street
Little Rock, Arkansas 72202
501-372-2900

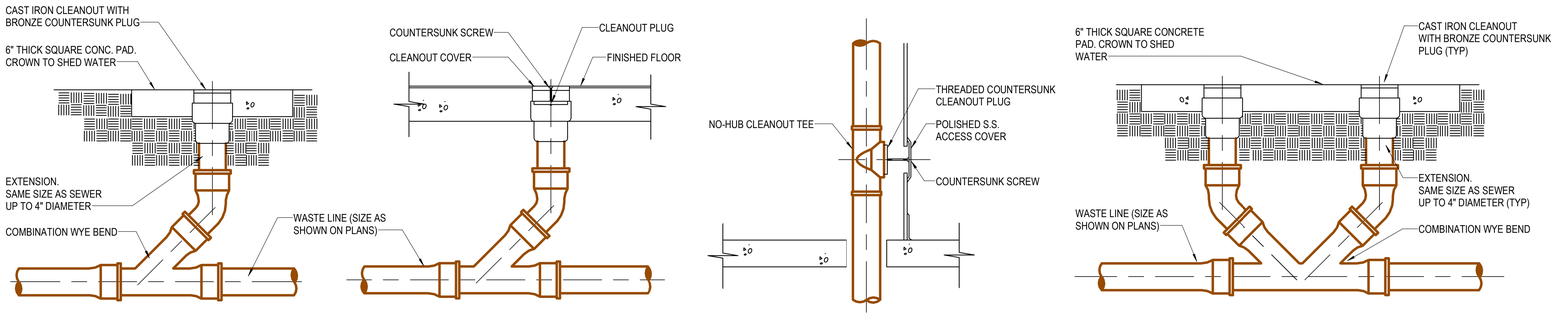

A CLEANOUT-TO-GRADE
NOTE: SEE SPECIFICATIONS FOR MATERIALS

B FLOOR CLEANOUT
NOTE: SEE SPECIFICATIONS FOR MATERIALS

C WALL CLEANOUT
NOTE: SEE SPECIFICATIONS FOR MATERIALS

D DOUBLE CLEANOUT-TO-GRADE
NOTE: SEE SPECIFICATIONS FOR MATERIALS

1 TYPICAL CLEANOUTS
NOT TO SCALE

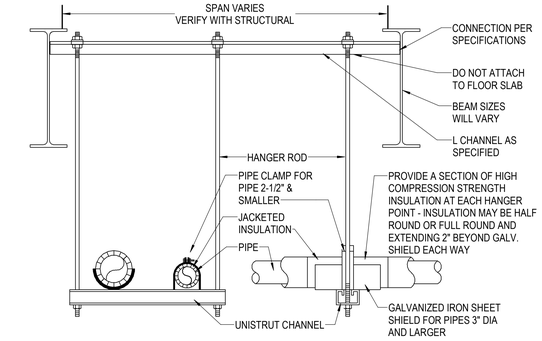

NOTES:
1. INSULATION TO BE CONTINUOUS THROUGH HANGERS. DO NOT BREAK INSULATION AT SUPPORTS, DO NOT INSULATE AROUND HANGERS.
2. INSULATION JACKET TO BE CONTINUOUS THROUGH PIPE SUPPORT COMPONENTS.
3. USE CLEVIS HANGERS FOR SINGLE PIPE RUNS, USE TRAPEZE HANGERS TO GROUP AS MUCH PIPING AS POSSIBLE PER HANGER.

2 TRAPEZE PIPE HANGER
NOT TO SCALE

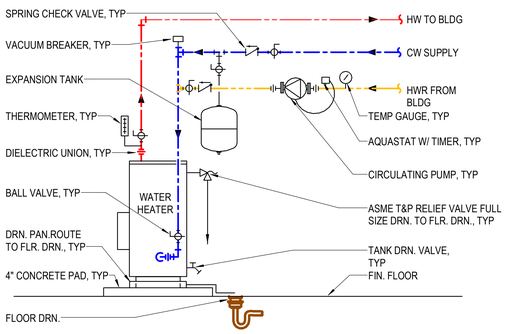

NOTES:
1. INSTALLATION AND SIZING OF EQUIPMENT, PIPING, PUMPS AND ACCESSORIES SHALL BE INSTALLED AND SIZED IN ACCORDANCE WITH MFR'S RECOMMENDATIONS.
2. AT TANK OPENINGS, PROVIDE A SHORT NIPPLE OF SAME MATERIAL AS TANK OPENING.
3. PROVIDE ASME T&P RELIEF VALVE AS REQUIRED BY CODE. ALL EQUIPMENT RELIEF VALVES SHALL BE ROUTED FULL SIZE AS NOTED.
4. INSTALL SPRING CHECK VALVE IN GRAVITY CLOSED POSITION.
5. DETAIL SHOWS GENERIC HOT WATER SYSTEM FOR GENERAL SYSTEM REQUIREMENTS.
6. ALL ISOLATION BALL VALVE SHALL BE FULL PORT TYPE.
7. PIPING ARRANGEMENT IS DIAGRAMMATIC AND IS SHOWN FOR CLARITY. PIPING SHALL BE INSTALLED NEATLY AND GROUPED FOR EASY ACCESS AND SERVICEABILITY.
8. PROVIDE SEISMIC SUPPORT AS REQUIRED BY CODE.

3 WATER HEATER INSTALLATION - EWH-1
NOT TO SCALE

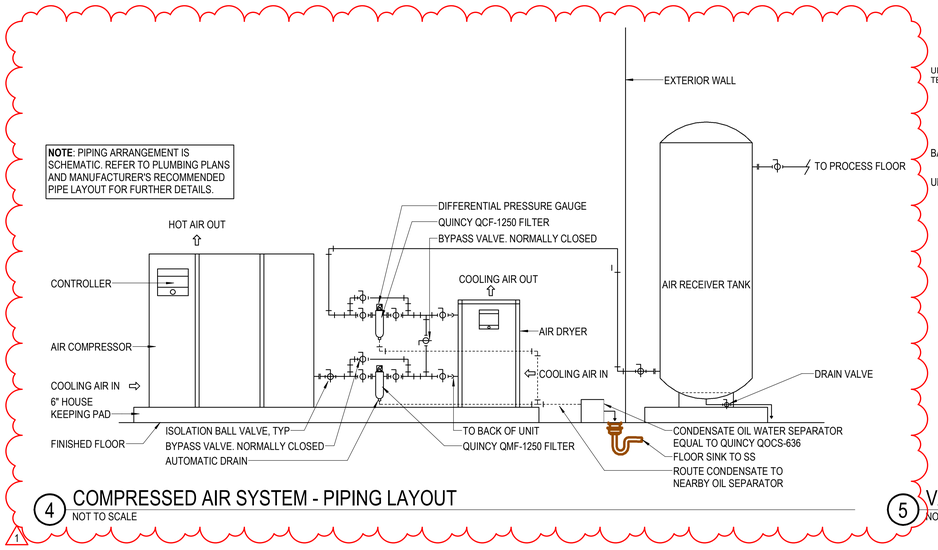

4 COMPRESSED AIR SYSTEM - PIPING LAYOUT
NOT TO SCALE

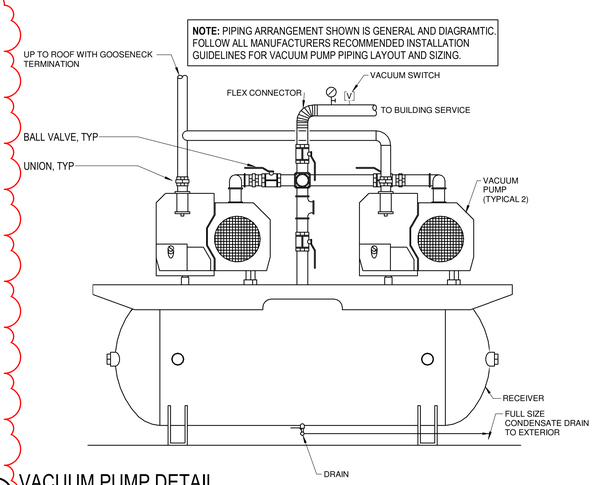

5 VACUUM PUMP DETAIL
NOT TO SCALE

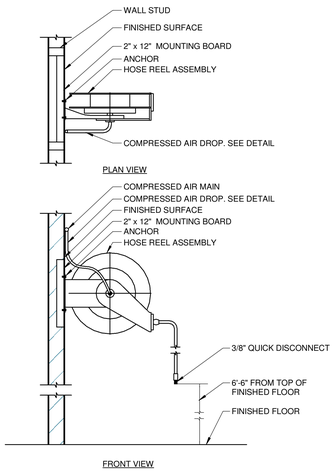

6 WALL MOUNTED HOSE REEL
NOT TO SCALE

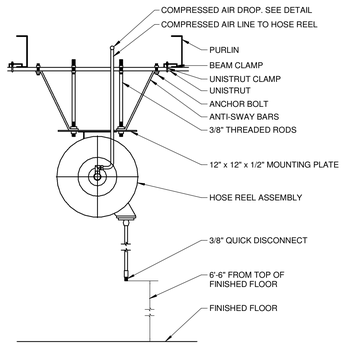

7 STRUCTURE MOUNTED HOSE REEL
NOT TO SCALE

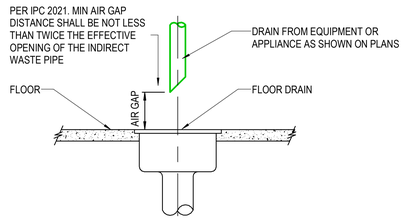

8 INDIRECT WASTE - SK-1
NOT TO SCALE

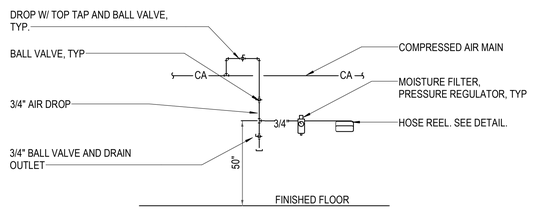

9 COMPRESSED AIR DROP
NOT TO SCALE

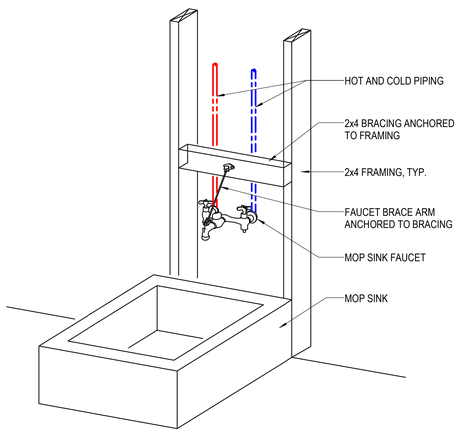

10 MOP SINK FAUCET BRACING - JS-1
NOT TO SCALE

Project
Anduril Industries - McHenry, MS
Rocket Motor Systems
Additions and Renovations to Buildings 300, 301, 302, 400, and 600 - McHenry, Mississippi

Design Phase
CONSTRUCTION DOCUMENTS

Revisions

No.	Date	Description
1	11-21-2024	RB 013

Stamp
ROBERT L. BEAY III, Engineer, 18400, STATE OF MISSISSIPPI
10-26-2023

Notes
1. CROMWELL ARCHITECTS ENGINEERS, INC. ALL RIGHTS RESERVED
2. THIS SHEET DESIGNED FOR COLOR PRINTING. CRITICAL INFORMATION MAY BE LOST WITH BLACK AND WHITE PRINTING.

Project Number: 2023-047
Issue Date: 10-26-2023
Sheet Title: PLUMBING DETAILS - ROBERTO - BUILDING 400
Sheet Number: B400-P-501