CROMWELL
1300 East 6th Street Little Rock, AR 72202
501.372.2900 cromwell.com

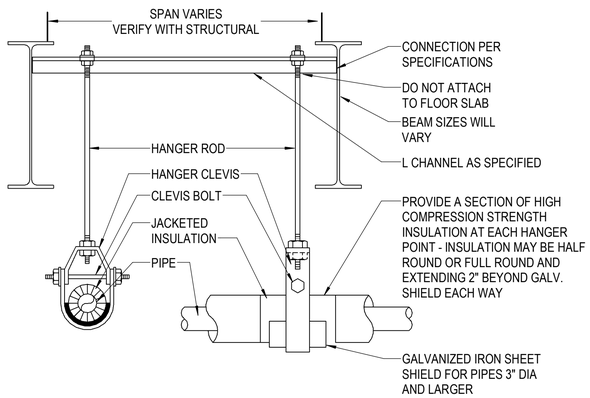

NOTES:
1. INSULATION TO BE CONTINUOUS THROUGH HANGERS. DO NOT BREAK INSULATION AT SUPPORTS, DO NOT INSULATE AROUND HANGERS.
2. INSULATION JACKET TO BE CONTINUOUS THROUGH PIPE SUPPORT COMPONENTS.
3. USE CLEVIS HANGERS FOR SINGLE PIPE RUNS, USE TRAPEZE HANGERS TO GROUP AS MUCH PIPING AS POSSIBLE PER HANGER.

1 ADJUSTABLE CLEVIS HANGER
NOT TO SCALE

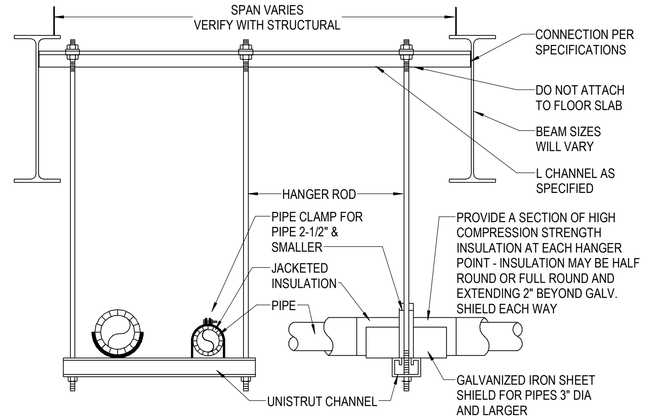

NOTES:
1. INSULATION TO BE CONTINUOUS THROUGH HANGERS. DO NOT BREAK INSULATION AT SUPPORTS, DO NOT INSULATE AROUND HANGERS.
2. INSULATION JACKET TO BE CONTINUOUS THROUGH PIPE SUPPORT COMPONENTS.
3. USE CLEVIS HANGERS FOR SINGLE PIPE RUNS, USE TRAPEZE HANGERS TO GROUP AS MUCH PIPING AS POSSIBLE PER HANGER.

2 TRAPEZE PIPE HANGER
NOT TO SCALE

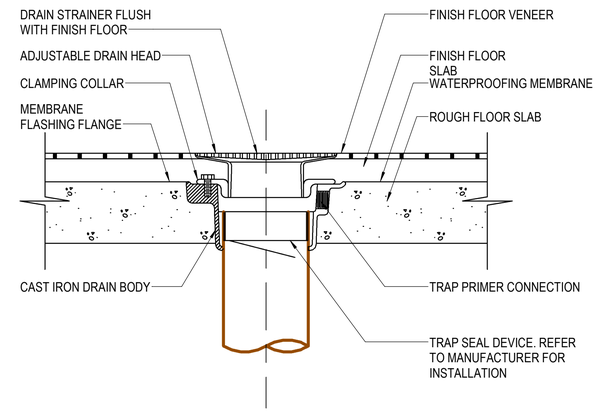

3 TRAP SEAL DEVICE INSTALLATION
NOT TO SCALE

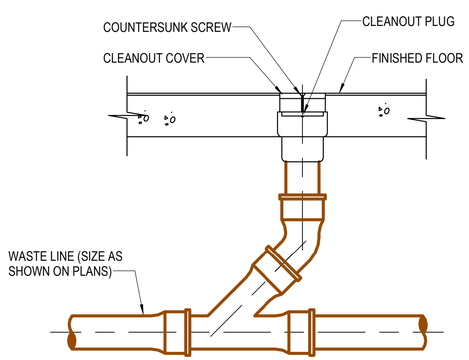

B FLOOR CLEANOUT
NOTE: SEE SPECIFICATIONS FOR MATERIALS

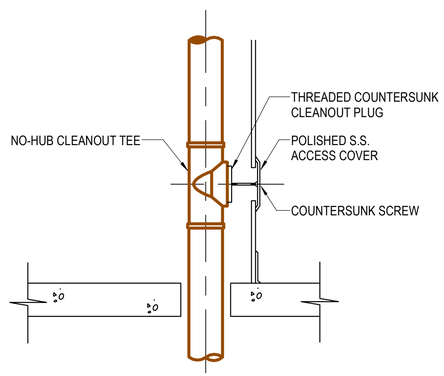

C WALL CLEANOUT
NOTE: SEE SPECIFICATIONS FOR MATERIALS

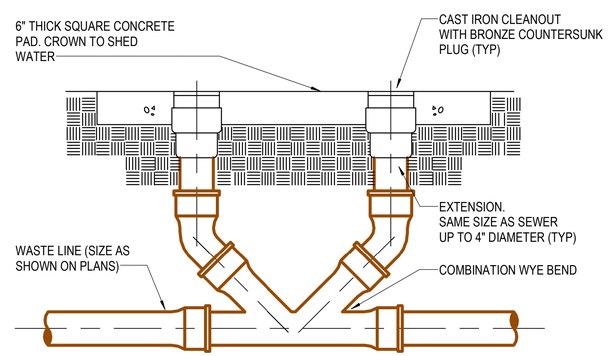

D DOUBLE CLEANOUT-TO-GRADE
NOTE: SEE SPECIFICATIONS FOR MATERIALS

4 TYPICAL CLEANOUTS
NOT TO SCALE

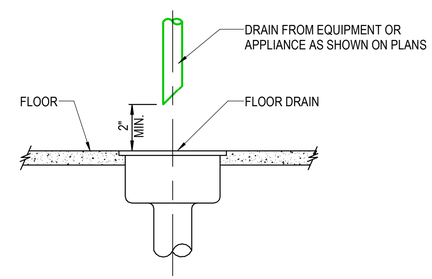

5 INDIRECT WASTE DRAIN
NOT TO SCALE

Project
AEROJET BUILDING E33
OFFICE EXPANSION
EAST CAMDEN, ARKANSAS

Design Phase
CONSTRUCTION DOCUMENTS

Revisions

No.	Date	Description

Stamp
CERTIFICATE OF AUTHORIZATION
CROMWELL ARCHITECTS/ ENGINEERS #5
ARKANSAS ENGINEER
ARKANSAS REGISTERED PROFESSIONAL ENGINEER
No. 12375
JAMIE L. GUIDRY
12-19-2024

Notes
1. **CROMWELL ARCHITECTS ENGINEERS, INC. ALL RIGHTS RESERVED**
2. **THIS SHEET DESIGNED FOR COLOR PRINTING. CRITICAL INFORMATION MAY BE LOST WITH BLACK AND WHITE PRINTING.**

Project Number **2024-134**
Issue Date **12-19-2024**
Sheet Title
PLUMBING DETAILS
Sheet Number
P-501