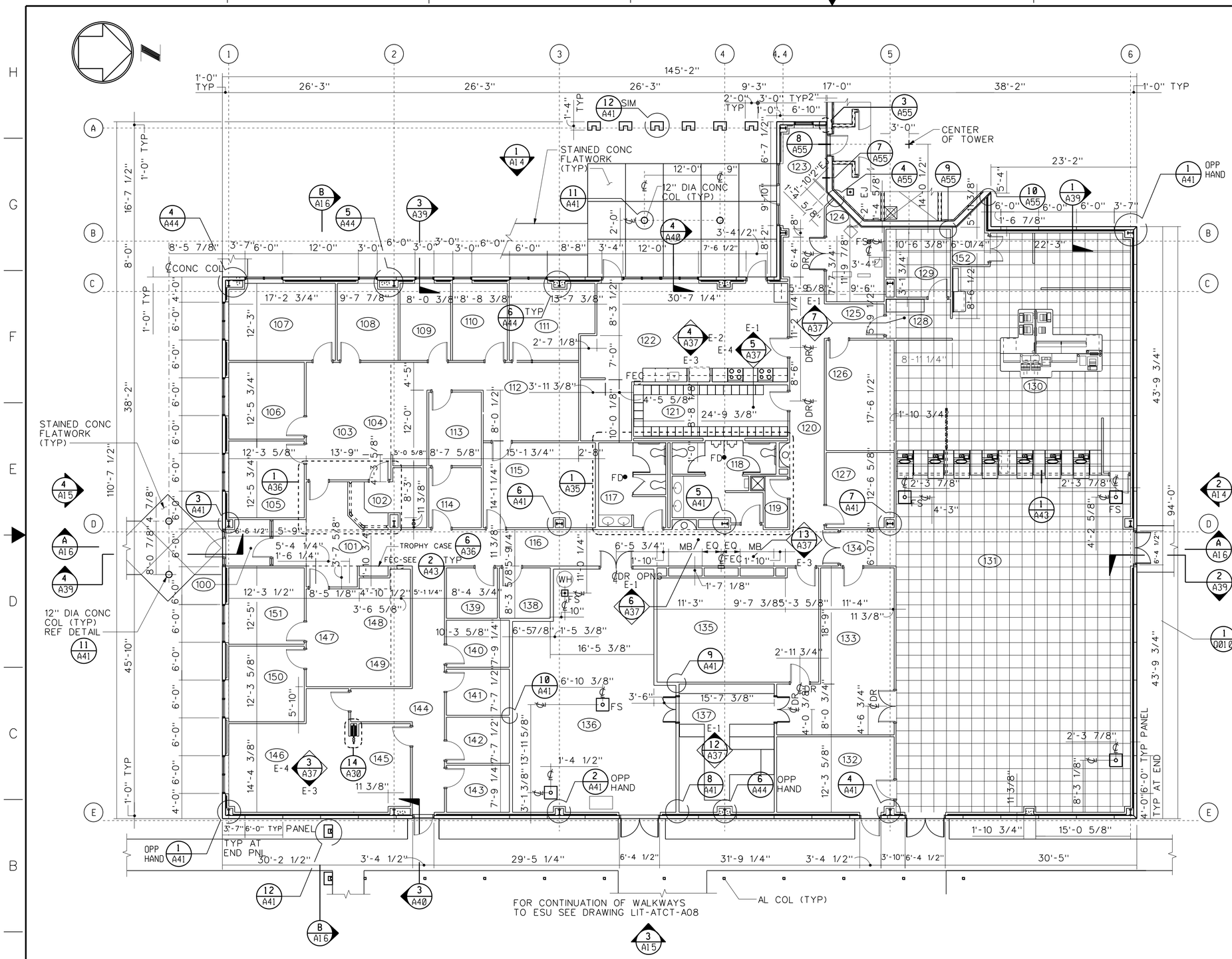

FLOOR PLAN
SCALE: 1/8" = 1'-0"

8' 0 8' 16'
SCALE: 1/8" = 1'-0"

ROOM SCHEDULE

NO.	NAME
100	VESTIBULE
101	LOBBY
102	ADMIN
103	A.T. RECEPTION
104	UNASSIGNED
105	ADMIN
106	A.T. OFFICE
107	A.T. MANAGER
108	A.T. TRAINING
109	A.T. OFFICE
110	STORAGE
111	PPS
112	FILE ROOM
113	NATCA
114	NATCA
115	A.T. TRAINING
116	CORRIDOR
117	WOMEN'S
118	MEN'S
119	JANITOR'S CLOSET
120	CORRIDOR
121	LOCKER ROOM
122	KITCHEN/BREAK ROOM
123	LINK
124	PUMP ROOM
125	CORRIDOR
126	ETG
127	STARS SECURITY OFFICE
128	VESTIBULE
129	SUPERVISOR'S OFFICE
130	TRACON ROOM
131	ELECTRONIC EQUIPMENT ROOM
132	TELCO ROOM
133	REPAIR ROOM
134	VESTIBULE
135	AF TECHNICIANS
136	ELECTRICAL/MECHANICAL ROOM
137	MATERIAL STORAGE
138	LAN ROOM
139	P.A.S.S.
140	CBI
141	ADMIN
142	STORAGE
143	STORAGE
144	CORRIDOR
145	TRAINING
146	CONFERENCE
147	AF RECEPTION
148	UNASSIGNED
149	UNASSIGNED
150	AF OFFICE
151	AF MGR
152	CABLE ACCESS ROOM

GENERAL NOTES:

1. FOR DOORS, WINDOWS AND PARTITION TYPES REFERENCE SYMBOLS, AND ADDITIONAL NOTES, REFERENCE DRAWING LIT-ATCT-A06.
2. REFERENCE DRAWING LIT-ATCT-G03 FOR ABBREVIATIONS.

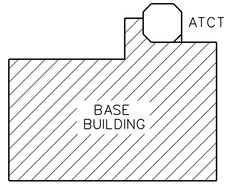

KEY PLAN
NOT TO SCALE

ESU

REV	APPROVED DATE	DESCRIPTION	JCN	REDLINE DATE	APVD
A	09/06/2011	REVISED PER SITE SURVEY.			EMH
1	01/12/2000	AS BUILT PER CONTRACTOR MARK-UP			AR

DEPARTMENT OF TRANSPORTATION
FEDERAL AVIATION ADMINISTRATION
ATO - TECHNICAL OPERATIONS CENTRAL SERVICE AREA

ATCT
FLOOR PLAN
BASE BUILDING

LITTLE ROCK LITTLE ROCK NATIONAL AIRPORT/ADAMS FIELD AR

REVIEWED BY
SUBMITTED BY: JACK ZICKL, PROGRAM IMPLEMENTATION ENGINEER
APPROVED BY: JOHN K.MARUT, SUPERVISOR OF SECTION, ASW-451
DESIGNED GW
DRAWN ED
CHECKED
ISSUED BY: AIRWAY FACILITIES DIVISION
DATE 07/07/1997 JCN
DRAWING NO LIT-ATCT-A05-01 REV A

ISSUED FOR:

LIT-ATCT-A05-01.DGN
EDM: LIT-ATCT-A05-01.DGN
john poston
4/4/2013 10:34:01 AM

THIS DRAWING PRODUCED ON ASW REGION MICROSTATION SYSTEM

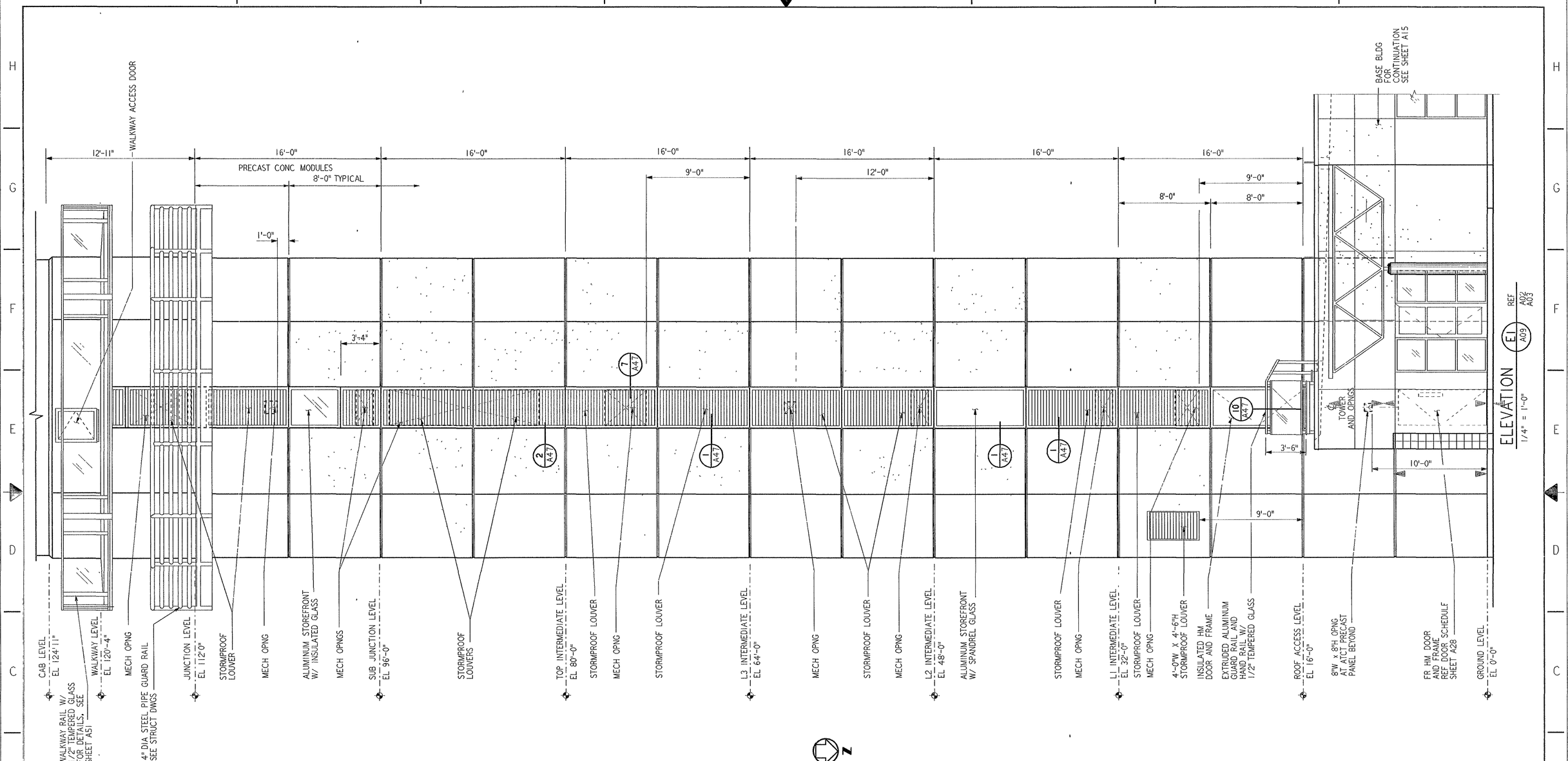

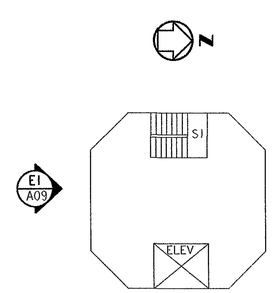

KEY PLAN

REV.	DATE	DESCRIPTION	DFTG.	CHECKED
	01-12-00	AS-BUILT PER CONTRACTOR MARK-UP	EP	AR

THE ORIGINAL WAS SIGNED AND SEALED BY A. AMBARDEKAR TX #2637 ON 7-7-97. ANY ALTERATION WITHOUT CONSENT OF ASHOK AMBARDEKAR IS IN VIOLATION OF STATE LAW. THE ORIGINAL IS ON FILE WITH THE FEDERAL AVIATION ADMINISTRATION SOUTHWEST REGION, FT. WORTH, TEXAS

PARSONS

DALLAS, TX

DEPARTMENT OF TRANSPORTATION
FEDERAL AVIATION ADMINISTRATION
SOUTHWEST REGION — FORT WORTH, TEXAS

INTERMEDIATE ACTIVITY LEVEL
AIRPORT TRAFFIC CONTROL TOWER

BUILDING ELEVATION
ATCT

LITTLE ROCK (LITTLE ROCK NATIONAL AIRPORT/ADAMS FIELD) ARKANSAS

SUBMITTED: JACK ZICKL, PROGRAM IMPLEMENTATION ENGINEER
APPROVED: JOHN K. MARUT, SUPERVISOR OF SECTION, ASW-451

DESIGNED: GARY WILLIAMS
REVIEWED: ASHOK AMBARDEKAR
ORIG. DFT.: S.RAJPREEJA
FACILITY:

ISSUED BY AIRWAY FACILITIES DIVISION

DATE: 7-7-97
DRAWING NUMBER: LIT-ATCT-A09-01

REF. DWG.:

FILENAME:

Tue Jan 26 15:39:18 1999 T36DT J:\PARSONS\QUEUES\T36DT\AR009A.PRF

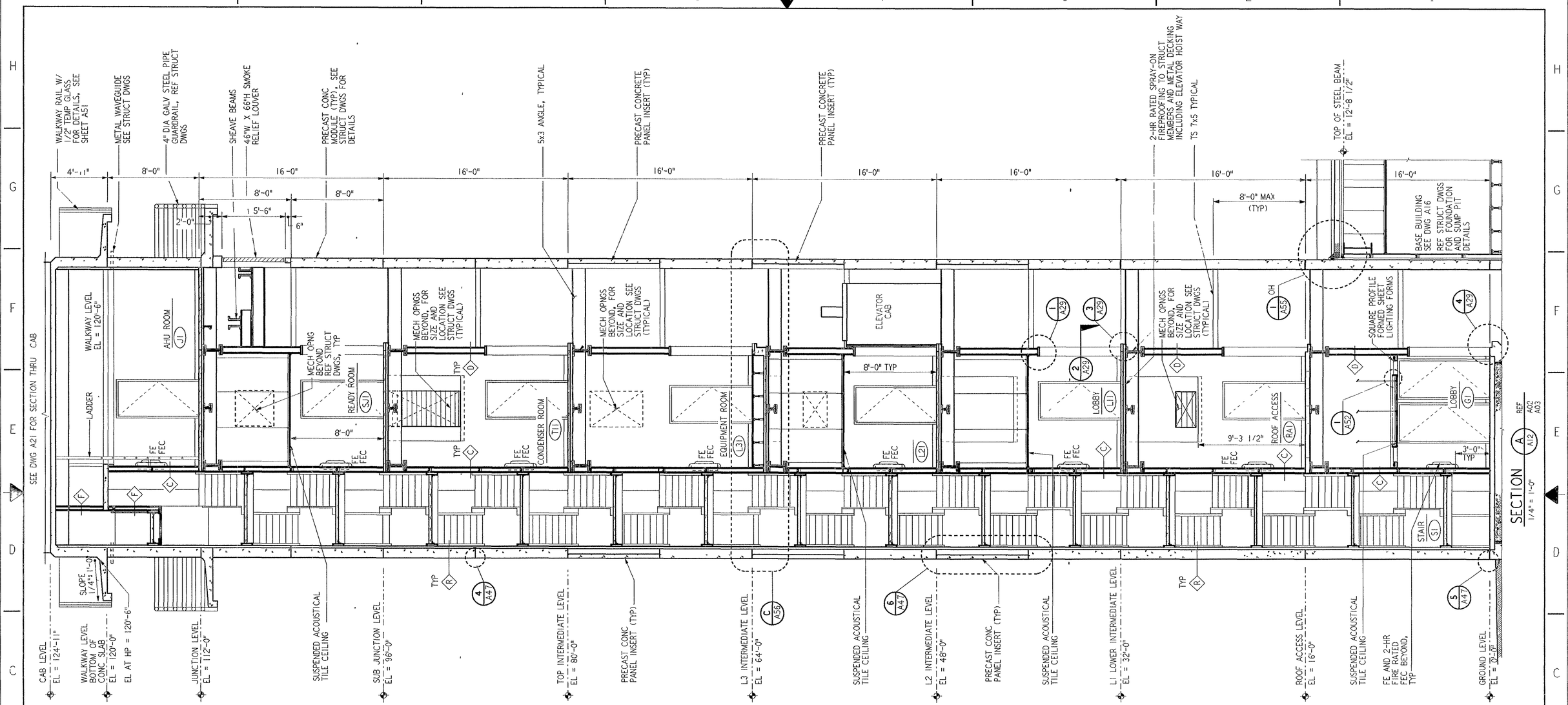

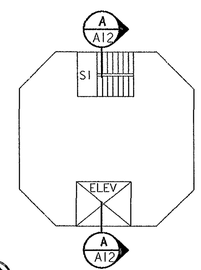

KEY PLAN

1/4" = 1'-0"

A12

REV.	DATE	DESCRIPTION	DFTG.	CHECKED
	01-12-00	AS-BUILT PER CONTRACTOR MARK-UP	EP	AR

THE ORIGINAL WAS SIGNED AND SEALED BY A. AMBARDEKAR TX #2637 ON 7-7-97 ANY ALTERNATION WITHOUT CONSENT OF ASHOK AMBARDEKAR IS IN VIOLATION OF STATE LAW. THE ORIGINAL IS ON FILE WITH THE FEDERAL AVIATION ADMINISTRATION SOUTHWEST REGION, FT. WORTH, TEXAS

PARSONS

DALLAS, TX

DEPARTMENT OF TRANSPORTATION
FEDERAL AVIATION ADMINISTRATION
SOUTHWEST REGION — FORT WORTH, TEXAS

INTERMEDIATE ACTIVITY LEVEL
AIRPORT TRAFFIC CONTROL TOWER

BUILDING SECTION
ATCT

LITTLE ROCK (LITTLE ROCK NATIONAL AIRPORT/ADAMS FIELD) ARKANSAS

SUBMITTED: JACK ZICKL, PROGRAM IMPLEMENTATION ENGINEER	APPROVED: JOHN K. MARUT, SUPERVISOR OF SECTION, ASW-451
DESIGNED: GARY WILLIAMS	DATE: 7-7-97
REVIEWED: ASHOK AMBARDEKAR	ISSUED BY AIRWAY FACILITIES DIVISION
ORIG. DFT.: S.RAJPREEJA	DRAWING NUMBER: LIT-ATCT-A12-01
FACILITY:	

FILENAME:

REF. DWG.:

Tue Jan 26 15:44:46 1999 T36DT J:\PARSONS\QUEUES\T36DT\AR012A.PRF

HVAC AND MOTOR CONTROL SCHEDULE

EQUIPMENT DESIGNATION		MOTOR			STARTER/DISC		WIRE SIZE/CONDUIT	CONTROL DIAGRAM NUMBER (NOTE 6)	SEE NOTE
MARK	DESCRIPTION	HP/FLA/KW	VOLT.	PHASE	TYPE	SIZE			
EF-1	EXHAUST FAN	1/6 HP	120	1	SWITCH	30A	2#12, #12G, 3/4"C	—	
EF-2	EXHAUST FAN	1/10 HP	120	1	FVNR	1	2#12, #12G, 3/4"C	2	
EF-3	EXHAUST FAN	1/6 HP	120	1	SWITCH	30A	2#12, #12G, 3/4"C	—	
EF-4	EXHAUST FAN	1.0 HP	208	3	FVNR	1	3#12, #12G, 3/4"C	4	1,3
EF-5	EXHAUST FAN	1/4 HP	120	1	FVNR	1	2#12, #12G, 3/4"C	2	
EF-6	EXHAUST FAN	1/4 HP	120	1	FVNR	1	2#12, #12G, 3/4"C	2	
EF-7	EXHAUST FAN	1/4 HP	120	1	FVNR/2SP	1	2#12, #12G, 3/4"C	1	1
EF-8	EXHAUST FAN	1.0 HP	480	3	FVNR/2SP	1	3#12, #12G, 3/4"C	1	1
EF-9	EXHAUST FAN	1.0 HP	480	3	FVNR	1	3#12, #12G, 3/4"C	1	1
EF-10	EXHAUST FAN	1/15 HP	120	1	SWITCH	30A	2#12, #12G, 3/4"C	—	
UH-1	UNIT HEATER	3KW-1/100HP	208	1	DISC	30A/2P/NF	2#12, #12G, 3/4"C		
UH-2	UNIT HEATER	4KW	208	1	DISC	30A/2P/NF	2#10, #12G, 3/4"C		
UH-3	UNIT HEATER	1.5KW	208	1	DISC	30A/2P/NF	2#12, #12G, 3/4"C		
UH-4	UNIT HEATER	5KW-1/100HP	480	3	DISC	30A/3P/NF	3#12, #12G, 3/4"C		
UH-5	UNIT HEATER	10KW-1/30HP	480	3	DISC	30A/3P/NF	3#12, #12G, 3/4"C		
CU-1	SERVES AHU-1	58.0 FLA	480	3	DISC	100A/3P/F80	3#4, #8G, 1 1/4"C		
CU-2	SERVES AHU-2	7.5 FLA	480	3	DISC	30A/3P/F15	3#12, #12G, 3/4"C		
CU-3	SERVES AHU-3	19.9 FLA	480	3	DISC	30A/3P/F50	3#10, #12G, 3/4"C		
CU-4	SERVES SAC-1	7.5HP	480	3	DISC	30A/3P/F20	3#12, #12G, 3/4"C		1
CU-5	SERVES SAC-2	7.5HP	480	3	DISC	30A/3P/F20	3#12, #12G, 3/4"C		1,2
CU-6	SERVES SAC-3	12.9FLA	480	3	DISC	30A/3P/F20	3#12, #12G, 3/4"C		1
CU-7	SERVES SAC-4	22.9FLA	208	1	DISC	60A/2P/F35	2#8, #10G, 3/4"C		
CRU-1	COMPUTER ROOM UNIT-BASE BLDG.	48.7 FLA	480	3	DISC	60A/3P/F60	3#6, #10G, 1"C		1
CRU-2	COMPUTER ROOM UNIT-BASE BLDG.	48.7 FLA	480	3	DISC	60A/3P/F60	3#6, #10G, 1"C		1
CRU-3	COMPUTER ROOM UNIT-BASE BLDG.	48.7 FLA	480	3	DISC	60A/3P/F60	3#6, #10G, 1"C		1,2
CRU-4	COMPUTER ROOM UNIT-ESU	12.6 FLA	480	3	DISC	30A/3P/F25	3#10, #12G, 3/4"C		1
CRU-5	COMPUTER ROOM UNIT-ESU	12.6 FLA	480	3	DISC	30A/3P/F25	3#10, #12G, 3/4"C		1,2
ACC-1	AIR COOL CONDENSING UNIT	4.4 FLA	480	3	DISC	30A/3P/F15	3#12, #12G, 3/4"C		1
ACC-2	AIR COOL CONDENSING UNIT	4.4 FLA	480	3	DISC	30A/3P/F15	3#12, #12G, 3/4"C		1
ACC-3	AIR COOL CONDENSING UNIT	4.4 FLA	480	3	DISC	30A/3P/F15	3#12, #12G, 3/4"C		1,2
ACC-4	AIR COOL CONDENSING UNIT	2.4 FLA	480	3	DISC	30A/3P/F15	3#12, #12G, 3/4"C		1
ACC-5	AIR COOL CONDENSING UNIT	2.4 FLA	480	3	DISC	30A/3P/F15	3#12, #12G, 3/4"C		1,2
AHU-1	AIR HANDLING UNIT	10 HP	480	3	FVNR	1	3#8, #10G, 3/4"C	2	
FURN-1	FURNACE	6.3 FLA	120	1	FVNR	1	2#12, #12G, 3/4"C	2	
FURN-2	FURNACE	10.4 FLA	120	1	FVNR	1	2#12, #12G, 3/4"C	2	
SAC-1	SELF CONTAINED A/C UNIT	36.6 FLA	480	3	DISC	60A/3P/F50	3#8, #10G, 3/4"C		1
SAC-2	SELF CONTAINED A/C UNIT	36.6 FLA	480	3	DISC	60A/3P/F50	3#8, #10G, 3/4"C		1,2
SAC-3	SELF CONTAINED A/C UNIT	28.3 FLA	480	3	DISC	60A/3P/F40	3#8, #10G, 3/4"C		1
SAC-4	SELF CONTAINED A/C UNIT	33.1 FLA	480	3	DISC	60A/3P/F40	3#8, #10G, 3/4"C		
P-1	PUMP-1	1 HP	480	3	FVNR	1	3#12, #12G, 3/4"C	2	
P-2	PUMP-2	1 HP	480	3	FVNR	1	3#12, #12G, 3/4"C	2	2
SF-1	SUPPLY FAN	3 HP	480	3	FVNR	1	3#12, #12G, 3/4"C	2	1
FP-1	FIRE PUMP	50 HP	480	3		SEE DRAWING E01	SEE DRAWING E01		1
JP-1	JOCKEY PUMP	1 1/2 HP	480	3		SEE DRAWING E01	SEE DRAWING E01		1
EHC-1	ELECTRIC HEATING COILS	25 KW	480	3	DISC	60A/3P/NF	3#8, #10G, 3/4"C		1
EHC-2	ELECTRIC HEATING COILS	25 KW	480	3	DISC	60A/3P/NF	3#8, #10G, 3/4"C		1,2
PTAC-1	ROOM AIR CONDITIONER)	20.3 FLA	208	1	RCPT	6-30R	2#10, #12G, 3/4"C		
PTAC-2	ROOM AIR CONDITIONER)	20.3 FLA	208	1	RCPT	6-30R	2#10, #12G, 3/4"C		
PTAC-3	ROOM AIR CONDITIONER)	20.3 FLA	208	1	RCPT	6-30R	2#10, #12G, 3/4"C		1
CV-1	CENTRAL VACUUM	3.0 HP	208	3	FVNR	1	3#12, #12G, 3/4"C	3	3
CV-2	CENTRAL VACUUM	7.5 HP	480	3	FVNR	1	3#10, #12G, 3/4"C	3	4
BP-1,2	BOOSTER PUMPS	(2) 1 1/2 HP	480	3	DISC	30A/3P/NF	3#12, #12G, 3/4"C		1
BP-3	BOOSTER PUMP	1/2 HP	120	1	DISC	30A/2P/NF	2#12, #12G, 3/4"C		1,3
SP-1	SUMP PUMP	1/2 HP	120	1	PLUG		2#12, #12G, 3/4"C		5
EWH-1	WATER HEATER	6KW	208	1			2#8, #10G, 3/4"C		
EWC-1	ELEC. WATER COOLER	1/5 HP	120				2#12, #12G, 3/4"C		
EWC-2	ELEC. WATER COOLER	1/5 HP	120				2#12, #12G, 3/4"C		
EWC-3	ELEC. WATER COOLER	1/5 HP	120				2#12, #12G, 3/4"C		
SVF-1	STAIR VENTILATION FAN	1 HP	480	3	FVNR	1	3#12, #12G, 3/4"C	2	1
SVF-2	STAIR VENTILATION FAN	1 1/2 HP	480	3	FVNR	1	3#12, #12G, 3/4"C	2	1
	-			-				-	
HU-1	HUMIDIFIER	6.5KW	480	3	DISC	30A/3P/NF	3#12, #12G, 3/4"C		1

NOTES:

1. ESSENTIAL POWER.
2. REDUNDANT STANDBY UNIT.
3. START STOP STATION IN ATCT CABINET.
4. START STOP STATION IN JANITORS CLOSET.
5. FLOAT CONTROLLED SELF CONTAINED UNIT.
6. SEE DRAWING E68 FOR CONTROL DIAGRAMS.

REV.	DATE	DESCRIPTION	DFTG.	CHECKED
	01-12-00	AS-BUILT PER CONTRACTOR MARK-UP	EP	AR

THE ORIGINAL WAS SIGNED AND SEALED BY:
Brion L. Eisenrich, TX #79415
ANY ALTERATION WITHOUT CONSENT OF
Brion L. Eisenrich IS IN VIOLATION OF
STATE LAW. THE ORIGINAL IS ON FILE WITH
THE FEDERAL AVIATION ADMINISTRATION
SOUTHWEST REGION, FT. WORTH, TEXAS

PARSONS
DALLAS, TX

DEPARTMENT OF TRANSPORTATION
FEDERAL AVIATION ADMINISTRATION
SOUTHWEST REGION — FORT WORTH, TEXAS

INTERMEDIATE ACTIVITY LEVEL
AIRPORT TRAFFIC CONTROL TOWER

MOTOR CONTROL SCHEDULE

LITTLE ROCK (LITTLE ROCK NATIONAL AIRPORT/ADAMS FIELD) ARKANSAS

SUBMITTED: ERBEY FERNANDEZ — PROGRAM IMPLEMENTATION ENGINEER
APPROVED: JOHNNIE L. WHITE — SUPERVISOR OF SECTION, ASW-457
DESIGNED: B. EISENRICH
REVIEWED: R. SLAY
ORIG. DFT.: E. PAULO
FACILITY:
ISSUED BY: AIRWAY FACILITIES DIVISION
DATE: 7-7-97
DRAWING NUMBER: LIT-ATCT-E21-01

E41

REF. DWG.:
FILENAME:

Mon Jan 25 13:45:44 1999 T36DT J:\PARSONS\QUEUES\T36DT\EE041.PRF

AIR HANDLING UNIT SCHEDULE

MARK	LOCATION	SERVES	TOTAL CFM	OA CFM	FAN				DX COOLING COIL						HW HEATING COIL				SINGLE POINT ELEC CONN				MANUFACTURER AND MODEL	REMARKS
					ESP	TSP	HP	RPM	TOTAL MBH	SENS MBH	EAT DB	EAT WB	LAT DB	LAT WB	ROW	MBH	GPM	PIPE SIZE	VOLT	PH	HZ	FLA		
AHU-1	BASE BLDG	BASE BLDG	9500	2000	1.57	3.54	10	1231	355	241	79.5	65.6	52.6	51.9	1	285.4	28.5	--	460	3	60	--		

NOTES:

1. FOR GENERAL NOTES, SEE DRAWING M01.

GAS-FIRED FURNACE SCHEDULE

MARK	LOCATION	SERVES	TOTAL CFM	OA CFM	FAN				SINGLE POINT ELEC CONN			MANUFACTURER AND MODEL	REMARKS
					ESP	TSP	HP	RPM	VOLT	PH	HZ		
FURN-1	ESU BLDG	OFFICES	500	100	0.83	1.51	1/4	--	115	1	60	TRANE TUD040C	
FURN-2	ESU BLDG	WORKROOM	1350	80	0.76	1.44	1/2	--	115	1	60	TRANE TUD080C	

DX COOLING COIL SCHEDULE

MARK	LOCATION	SERVES	DX COOLING COIL						AIR PD (IN WG)	MANUFACTURER AND MODEL	REMARKS
			TOTAL MBH	SENS MBH	EAT DB	EAT WB	LAT DB	LAT WB			
CC-1	ESU BLDG	OFFICES	17.3	11.8	79.2	65.4	58.6	54.5	0.23	TRANE TXC018C	
CC-2	ESU BLDG	WORKROOM	47.2	30.5	79.1	67.1	58.9	56.3	0.29	TRANE TXC054E	

COMPUTER ROOM UNIT SCHEDULE

MARK	LOCATION	SERVES	TYPE	FAN			COOLING DATA				COMPRESSOR DATA		HUMIDIFIER		REHEAT COIL				SINGLE POINT ELEC CONN				MANUFACTURER AND MODEL	REMARKS
				CFM	ESP	HP	TOTAL MBH	SENS MBH	EAT DB	EAT WB	NO	RPM	LBS/ HR	KW	MBH	KW	FLOW GPM	PD PSI	VOLT	PH	HZ	FLA*		
CRU-1	BASE BLDG	TRACON	DX,DN FLOW	8400	0.5	3.0	174.8	162.3	75	62.5	2	1750	17.4	6.4	93	27	5	1.4	460	3	60	48.7	LIEBERT FH-199A	ESSENTIAL POWER
CRU-2	BASE BLDG	TRACON	DX,DN FLOW	8400	0.5	3.0	174.8	162.3	75	62.5	2	1750	17.4	6.4	93	27	5	1.4	460	3	60	48.7	LIEBERT FH-199A	ESSENTIAL POWER
CRU-3	BASE BLDG	TRACON	DX,DN FLOW	8400	0.5	3.0	174.8	162.3	75	62.5	2	1750	17.4	6.4	93	27	5	1.4	460	3	60	48.7	LIEBERT FH-199A	ESSENTIAL POWER, STANDBY
CRU-4	ESU BLDG	UPS	DX,UP FLOW	2800	0.3	1.5	60.6	52.2	75	62.5	1	1750	--	--	--	--	--	--	460	3	60	12.6	LIEBERT BU-067A	ESSENTIAL POWER
CRU-5	ESU BLDG	UPS	DX,UP FLOW	2800	0.3	1.5	60.6	52.2	75	62.5	1	1750	--	--	--	--	--	--	460	3	60	12.6	LIEBERT BU-067A	ESSENTIAL POWER, STANDBY

* FLA VALUE INDICATES WORST CASE CURRENT DRAW FOR UNIT

AIR COOLED CONDENSING UNIT SCHEDULE

MARK	LOCATION	SERVES	NET COOLING CAP TONS	CONDENSER DATA							ELECTRICAL DATA				MANUFACTURER AND MODEL	REMARKS
				COND FANS		NO REFRIG CIRC	COIL FACE AREA FT	ESP	AIR FLOW CFM	AMB TEMP F	VOLT	PH	HZ	FLA		
				NO	HP											
ACC-1	OUTDOORS	CRU-1	15	2	3/4	2	--	--	10443	95	460	3	60	4.4	LIEBERT CD-205L	ESSENTIAL POWER
ACC-2	OUTDOORS	CRU-2	15	2	3/4	2	--	--	10443	95	460	3	60	4.4	LIEBERT CD-205L	ESSENTIAL POWER
ACC-3	OUTDOORS	CRU-3	15	2	3/4	2	--	--	10443	95	460	3	60	4.4	LIEBERT CD-205L	ESSENTIAL POWER, STANDBY
ACC-4	OUTDOORS	CRU-4	5	1	3/4	1	11.1	--		95	460	3	60	2.4	LIEBERT CS-083L	ESSENTIAL POWER
ACC-5	OUTDOORS	CRU-5	5	1	3/4	1	11.1	--		95	460	3	60	2.4	LIEBERT CS-083L	ESSENTIAL POWER, STANDBY

CONDENSING UNIT SCHEDULE

MARK	LOCATION	SERVES	NOMINAL COOLING CAP TONS	COMPRESSOR DATA				CONDENSER DATA						ELECTRICAL DATA						MANUFACTURER AND MODEL	REMARKS
				REFRIG	QTY	STEPS	KW	COND FANS		NO REFRIG CIRC	COIL FACE AREA FT	AIR FLOW CFM	AMB TEMP F	VOLT	PH	HZ	FLA	MCA	MOCP		
								NO	HP/W												
CU-1A	OUTDOORS	AHU-1	15	R-410	2	--	--	2	1.0	1	--	--	100	460	3	60	--	34.6	45.0	CARRIER AUZ16	1-3/8" SUCTION, 5/8" LIQUID LINE
CU-1B	OUTDOORS	AHU-1	15	R-410	2	--	--	2	1.0	1	--	--	100	460	3	60	--	34.6	45.0	CARRIER AUZ16	1-3/8" SUCTION, 5/8" LIQUID LINE
CU-2	OUTDOORS	FURN-1	1.5	R-22	1	1	1.3	1	95W	1	--	3030	100	460	3	60	7.5			TRANE TTP018C	
CU-3	OUTDOORS	FURN-2	3.5	R-22	1	1	3.4	1	319W	1	--	3030	100	460	3	60	19.9			TRANE TTP048C	
CU-13	OUTDOORS	FCU-131	1.5	R-410	1	3	1.7	1	--	1	--	--	95	208	1	60	--	17	30	CARRIER RAV-SP180AT2-UL	SERVICES FCU-131

FILTER SCHEDULE

MARK	SERVES	TYPE	CFM	MAX VEL FPM	PD (IN WG)		NUMBER AND SIZE	MIN AVG EFF ASHRAE	MANUFACTURER AND MODEL	REMARKS
					INITIAL	FINAL				
F-1	SAC-1,2	THROWAWAY	6500	500	0.45	0.90	8 - 15x20	30-35%	FARR 30/30	2" THICK
F-2	CU-4,5	THROWAWAY	8500	570	0.35	0.90	4 - 20x20, 2 - 20x24	30-35%	FARR 30/30	4" THICK
F-3	AHU-1	THROWAWAY	9500	300	0.35	0.90	6 - 24x24	95%	FARR RIGA-FLO 200	12" THICK CARTRIDGE WITH 2" PRE-FILTER
F-4	FURN-1,2	THROWAWAY	500/1350	500	0.45	0.90	1 - 24x24	30-35%	FARR 30/30	2" THICK
F-5	E/G ROOM	THROWAWAY	8250	300	0.15	0.90	4 - 24x24, 4 - 18x24	30-35%	FARR 30/30	2" THICK
F-6	E/G ROOM	THROWAWAY	8250	300	0.15	0.90	4 - 24x24, 4 - 18x24	30-35%	FARR 30/30	2" THICK

REV	APPROVED DATE	DESCRIPTION	JCN	REDLINE DATE	APVD
D	04/02/2018	AS-BUILT (A. SCHUMACHER)	1100154	04/02/2018	AS
C	10/12/2017	AS-BUILT (T. CLAYTON).	1100154	10/12/2017	TC
B	04/01/2015	HVAC REPLACEMENT PROJECT	705967	04/01/2015	JLW
1	01/12/2000	AS-BUILT PER CONTRACTOR MARK-UP			AR

DEPARTMENT OF TRANSPORTATION
FEDERAL AVIATION ADMINISTRATION
ATO - TECHNICAL OPERATIONS CENTRAL SERVICE AREA

ATCT

HVAC EQUIPMENT SCHEDULES

LITTLE ROCK BILL & HILLARY CLINTON NATL ARPT/ADAMS FIELD AR

REVIEWED BY

SUBMITTED BY: ERBEY FERNANDEZ, PROGRAM IMPLEMENTATION ENGR.

APPROVED BY: JOHNNIE L. WHITE, SUPERVISOR OF SECTION, ASW-457

DESIGNED DP | DRAWN JM | CHECKED ME

ISSUED BY: ENGINEERING SERVICES INFRASTRUCTURE

DATE 07/07/1997 | JCN

DRAWING NO LIT-ATCT-M02 | REV D

ISSUED FOR: AS-BUILT

LIT-ATCT-M02.DGN 4/5/2018 6:59:12 AM Jacqueline CTR Gulie

EDM: LIT-ATCT-M02.DGN

THIS DRAWING PRODUCED ON ASW REGION MICROSTATION SYSTEM

DIFFUSER, REGISTER, AND GRILLE SCHEDULE

MARK	SERVES	CFM RANGE	TYPE	FACE SIZE (IN X IN) (NOMINAL)	NECK SIZE (INCHES)	MANUFACTURER AND MODEL	REMARKS
CD-1	SUPPLY AIR	50-150	LOUVERED	24X24	6 Ø	TITUS TMS-NT	
CD-2	SUPPLY AIR	150-300	LOUVERED	24X24	8 Ø	TITUS TMS-NT	
CD-3	SUPPLY AIR	300-400	LOUVERED	24X24	10 Ø	TITUS TMS-NT	
CD-4	SUPPLY AIR	400-650	LOUVERED	24X24	12 Ø	TITUS TMS	
CD-5	SUPPLY AIR	2150	LOUVERED	24X24	18X18	TITUS TDCA	
D-1	SUPPLY AIR	500	LINEAR BAR	3 1/2X72	3 1/2X72	TITUS CT-581	
D-2	SUPPLY AIR	50-150	LINEAR SLOT	(1) 1.0X48	8 Ø	TITUS TBD-80-NT	
D-3	SUPPLY AIR	150-300	LINEAR SLOT	(2) 1.0X48	10 Ø	TITUS TBD-80-NT	
D-4	SUPPLY AIR	100-200	LINEAR BAR	3 1/2X48	3 1/2X48	TITUS CT-581	
ER-1	EXHAUST AIR	50-150	PERFORATED	24X24	6 Ø	TITUS PAR-NT	
ER-2	EXHAUST AIR	150-300	PERFORATED	24X24	8 Ø	TITUS PAR-NT	
ER-3	EXHAUST AIR	600	LOUVERED	14X14	14X14	TITUS 13RL	SURFACE MOUNT
ER-4	TRANSFER AIR	2500	LOUVERED	30X30	30X30	TITUS 13RL	SURFACE MOUNT
RR-1	RETURN AIR	750	LOUVERED	24X24	24X24	TITUS 350RL-NT	
RR-2	RETURN AIR	3000	BAR	30X30	30X30	TITUS 30RL	
RR-3	RETURN AIR	100-250	BAR	8X6, 10X6	8X6, 10X6	TITUS 30RL	SURFACE MOUNT
RR-4	RETURN AIR	1620	LOUVERED	20X14	20X14	TITUS 350ZRL	
RR-5	RETURN AIR	50-150	PERFORATED	24X24	24X24	TITUS PAR-NT	
RR-6	RETURN AIR	2000	EGGCRATE	24X24	20X20	TITUS 50R	
GR-1	SUPPLY AIR	4000	LOUVERED	30X30	30X30	TITUS 13RL	SURFACE MOUNT
GR-2	SUPPLY AIR	6500	LOUVERED	30X30	30X30	TITUS 271RL	SURFACE MOUNT W/ OBD
GR-3	SUPPLY AIR	500	LOUVERED	12X10	12X10	TITUS 271RS	DUCT MOUNT
GR-4	SUPPLY AIR	500	BAR	12X10	12X10	TITUS 350ZRL	DUCT MOUNT
GR-5	OUTSIDE AIR	2500	BAR	24X18	24X18	TITUS 355ZRL	SURFACE MOUNT
GR-6	SUPPLY AIR	350	BAR	10X10	10X10	TITUS 30RL	SURFACE MOUNT W/ OBD
GR-7	EXHAUST AIR	460	BAR	12X12	12X12	TITUS 30RL	SURFACE MOUNT W/ OBD
GR-8	SUPPLY AIR	310	LOUVERED	18X10	18X10	TITUS 350ZRL	SURFACE MOUNT

ELECTRIC HEATING COIL SCHEDULE

MARK	SERVES	AIR FLOW CFM	CAPACITY KW	AIR PD (IN WG)	ELEMENT DATA				MANUFACTURER AND MODEL	REMARKS
					VOLTS	PH	HZ	STEPS		
EHC-1	TOWER CAB	6500	25	0.3	460	3	60	2	TUTCO	ESSENTIAL POWER, MOUNT COIL IN UNIT IN REHEAT POSITION
EHC-2	TOWER CAB	6500	25	0.3	460	3	60	2	TUTCO	ESSENTIAL POWER, STANDBY, MOUNT COIL IN UNIT IN REHEAT POSITION

FAN SCHEDULE

MARK	LOCATION	SERVES	CFM	TOTAL SP (IN WG)	FAN RPM	MOTOR DATA					WHEEL DIA AND TYPE	MANUFACTURER AND MODEL	REMARKS
						HP	RPM	VOLTS	PH	HZ			
SF-1	ROOF ACCESS LEVEL	ATCT STAIRWELL PRESSURIZATION	6500	0.50	1297	3	1725	460	3	60	INLINE	GREENHECK BSQ-200-30	ESSENTIAL POWER
SVF-1	L2 INTERMEDIATE	ATCT STAIRWELL VENT SUPPLY	2150	0.50	1400	1	1400	460	3	60	UTILITY	GREENHECK SFB-12	ESSENTIAL POWER
SVF-2	L3 INTERMEDIATE	ATCT STAIRWELL VENT EXHAUST	3225	0.50	1200	1.5	1200	460	3	60	UTILITY	GREENHECK SFB-15	ESSENTIAL POWER

PUMP SCHEDULE

MARK	LOCATION	SERVES	TYPE	GPM	TOTAL HEAD FT WG	MOTOR DATA					MANUFACTURER AND MODEL	REMARKS
						HP	RPM	VOLTS	PH	HZ		
P-1	MECH RM	HOT WATER	CENTRIFUGAL	56	40	1	1760	460	3	60	BELL & GOSSETT 1510	
P-2	MECH RM	HOT WATER	CENTRIFUGAL	56	40	1	1760	460	3	60	BELL & GOSSETT 1510	STANDBY

NOTES:

1. FOR GENERAL NOTES, SEE DRAWING M01.

BOILER SCHEDULE

MARK	LOCATION	SERVES	TYPE	INPUT (MBH)	OUTPUT (MBH)	WATER			FUEL	MANUFACTURER AND MODEL	REMARKS
						EWT	LWT	GPM			
B-1	MECH RM	HOT WATER	CAST IRON	462	370	160	180	56	NAT GAS	BURNHAM 808B SERIES	9" VTR

MECHANICAL EQUIPMENT SCHEDULE

MARK	LOCATION	SERVES	MAX FLOW GPM	TANK VOL GAL	ACCEPT VOL GAL	MAX DIMENSIONS		OPER PRESS PSI	MANUFACTURER AND MODEL	REMARKS
						LENGTH	DIAMETER			
XT-1	BASE BUILDING	HOT WATER	-	57	57	61"	20"	150	TACO-CA215	HORIZONTAL EXPANSION TANK
AS-1	BASE BUILDING	HOT WATER	80	--	--	18"	9"	150	TACO-AC2F	AIR SEPARATOR W/ STRAINER

VAV FAN POWERED TERMINAL UNIT SCHEDULE

MARK	PRIMARY INLET DIAMETER	DAMPER CFM		MAX RAD NC VALUE	MAXIMUM BOX DEPTH	FAN DATA				HW REHEAT COIL DATA				MANUFACTURER AND MODEL	PRIMARY DUCT TAKEOFF (IN)	REMARKS
		MAX	MIN			NO.	HP	MAX CFM	ESP (IN WG)	ROW	BTUH	GPM	PIPE SIZE (IN)			
VAV-1	8"	500	175	35	14"	1	1/10	500	0.3	1	7241	3/4	1/2	TITUS #PTFQ-2	10X8	
VAV-2	8"	500	175	35	14"	1	1/10	500	0.3	1	6415	3/4	1/2	TITUS #PTFQ-2	10X8	
VAV-3	10"	900	500	35	14"	1	1/4	900	0.3	1	14612	1 1/2	3/4	TITUS #PTFQ-3	14X10	
VAV-4	8"	500	175	35	14"	1	1/10	500	0.3	1	8116	1	1/2	TITUS #PTFQ-2	10X8	
VAV-5	8"	500	175	35	14"	1	1/10	500	0.3	1	7840	1	1/2	TITUS #PTFQ-2	10X8	
VAV-6	12"	1400	900	35	17"	1	1/3	1400	0.3	1	15730	2	3/4	TITUS #PTFQ-4	18X10	
VAV-7	8"	500	175	35	14"	1	1/10	500	0.3	1	7581	1	1/2	TITUS #PTFQ-2	10X8	
VAV-8	8"	500	175	35	14"	1	1/10	500	0.3	1	6415	3/4	1/2	TITUS #PTFQ-2	10X8	
VAV-9	10"	900	500	35	14"	1	1/4	900	0.3	1	9428	1	1/2	TITUS #PTFQ-3	14X10	
VAV-10	8"	500	175	35	14"	1	1/10	500	0.3	1	6367	3/4	1/2	TITUS #PTFQ-2	10X8	
VAV-11	8"	500	175	35	14"	1	1/10	500	0.3	1	8278	1	1/2	TITUS #PTFQ-2	10X8	
VAV-12	12"	1400	900	35	17"	1	1/3	1400	0.3	1	6539	3/4	1/2	TITUS #PTFQ-4	18X10	
VAV-13	8"	500	175	35	14"	1	1/10	500	0.3	1	5249	3/4	1/2	TITUS #PTFQ-2	10X8	
VAV-14	10"	900	500	35	14"	1	1/4	900	0.3	1	3667	1/2	1/2	TITUS #PTFQ-3	14X10	
VAV-15	8"	500	175	35	14"	1	1/10	500	0.3	1	1399	1/2	1/2	TITUS #PTFQ-2	10X8	
VAV-16	10"	900	500	35	14"	1	1/4	900	0.3	1	11648	1 1/2	3/4	TITUS #PTFQ-3	14X10	
VAV-17	8"	500	175	35	14"	1	1/10	500	0.3	1	7776	1	1/2	TITUS #PTFQ-2	10X8	
VAV-18	8"	500	175	35	14"	1	1/10	500	0.3	1	8456	1	1/2	TITUS #PTFQ-2	10X8	

NOTE: VARIABLE AIR VOLUME IS FOR PRIMARY AIR DAMPER ONLY. UNITS SHALL BE PROVIDED WITH SERIES TYPE, CONSTANT VOLUME SUPPLY FANS.

M03

REV.	DATE	DESCRIPTION	DFTG.	CHECKED
	01-12-00	AS-BUILT PER CONTRACTOR MARK-UP	EP	AR

THE ORIGINAL WAS SIGNED AND SEALED BY DAVID M. PFUNDT AR #6368
ANY ALTERATION WITHOUT CONSENT OF DAVID M. PFUNDT IS IN VIOLATION OF STATE LAW. THE ORIGINAL IS ON FILE WITH THE FEDERAL AVIATION ADMINISTRATION SOUTHWEST REGION, FT. WORTH, TEXAS

PARSONS
DALLAS, TX

DEPARTMENT OF TRANSPORTATION
FEDERAL AVIATION ADMINISTRATION
SOUTHWEST REGION — FORT WORTH, TEXAS

INTERMEDIATE ACTIVITY LEVEL
AIRPORT TRAFFIC CONTROL TOWER

HVAC
EQUIPMENT SCHEDULES

LITTLE ROCK (LITTLE ROCK NATIONAL AIRPORT/ADAMS FIELD) ARKANSAS

SUBMITTED: ERBEY FERNANDEZ — PROGRAM IMPLEMENTATION ENGINEER
APPROVED: JOHNNIE L. WHITE — SUPERVISOR OF SECTION, ASW-457

DESIGNED: D. PFUNDT
REVIEWED: M. ELKAN
ORIG. DFT.: J. MILLER
FACILITY:

ISSUED BY AIRWAY FACILITIES DIVISION

DATE: 7-7-97
DRAWING NUMBER: LIT-ATCT-M03-01

FILENAME:

REF. DWG.:

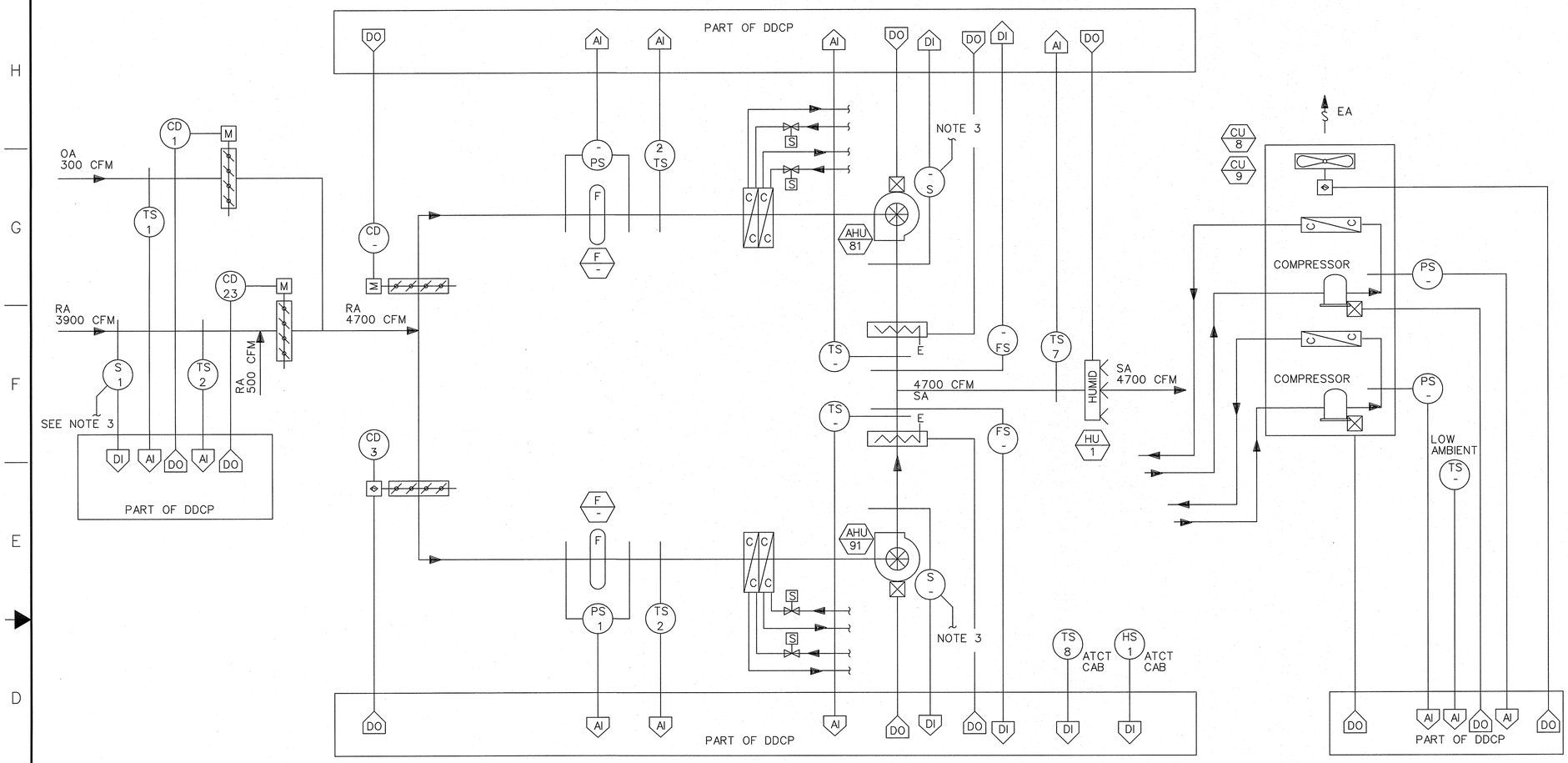

A M04 TEMPERATURE CONTROL AND AIR FLOW DIAGRAM AHU-81 AND AHU-91 (ATCT JUNCTION LEVEL)

NOT TO SCALE

A M04 TEMPERATURE CONTROL AND AIR FLOW DIAGRAM CU-8 AND CU-9 (GROUND LEVEL)

NOT TO SCALE

NOTES:

1. FOR GENERAL NOTES, SEE DRAWING M01.
2. FOR SEQUENCE OF OPERATION, SEE SPECIFICATION SECTION 15975.
3. PROVIDED CONNECTION TO THE FIRE ALARM CONTROL PANEL.

REV	APPROVED DATE	DESCRIPTION	JCN	REDLINE DATE	APVD
C	10/12/2017	AS-BUILT (T. CLAYTON).	1100154	10/12/2017	TC
B	04/01/2015	HVAC REPLACEMENT PROJECT			JLW
1	01/12/2000	AS-BUILT PER CONTRACTOR MARK-UP			AR

DEPARTMENT OF TRANSPORTATION
FEDERAL AVIATION ADMINISTRATION
ATO - TECHNICAL OPERATIONS **CENTRAL SERVICE AREA**

ATCT
HVAC CONTROL DIAGRAMS

LITTLE ROCK BILL & HILLARY CLINTON NATL ARPT/ADAMS FIELD AR

REVIEWED BY	SUBMITTED BY	APPROVED BY
	ERBEY FERNANDEZ	JOHNNIE L.WHITE
	PROGRAM IMPLEMENTATION ENGR.	SUPERVISOR OF SECTION, ASW-457

DESIGNED DP
DRAWN JM
CHECKED ME
ISSUED BY: ENGINEERING SERVICES INFRASTRUCTURE
DATE 07/07/1997 JCN
DRAWING NO LIT-ATCT-M04 REV C

ISSUED FOR:

THIS DRAWING PRODUCED ON ASW REGION MICROSTATION SYSTEM

LIT-ATCT-M04.DGN 10/26/2017 4:06:21 PM Paul CTR O'Donnell

EDM: LIT-ATCT-M04.DGN

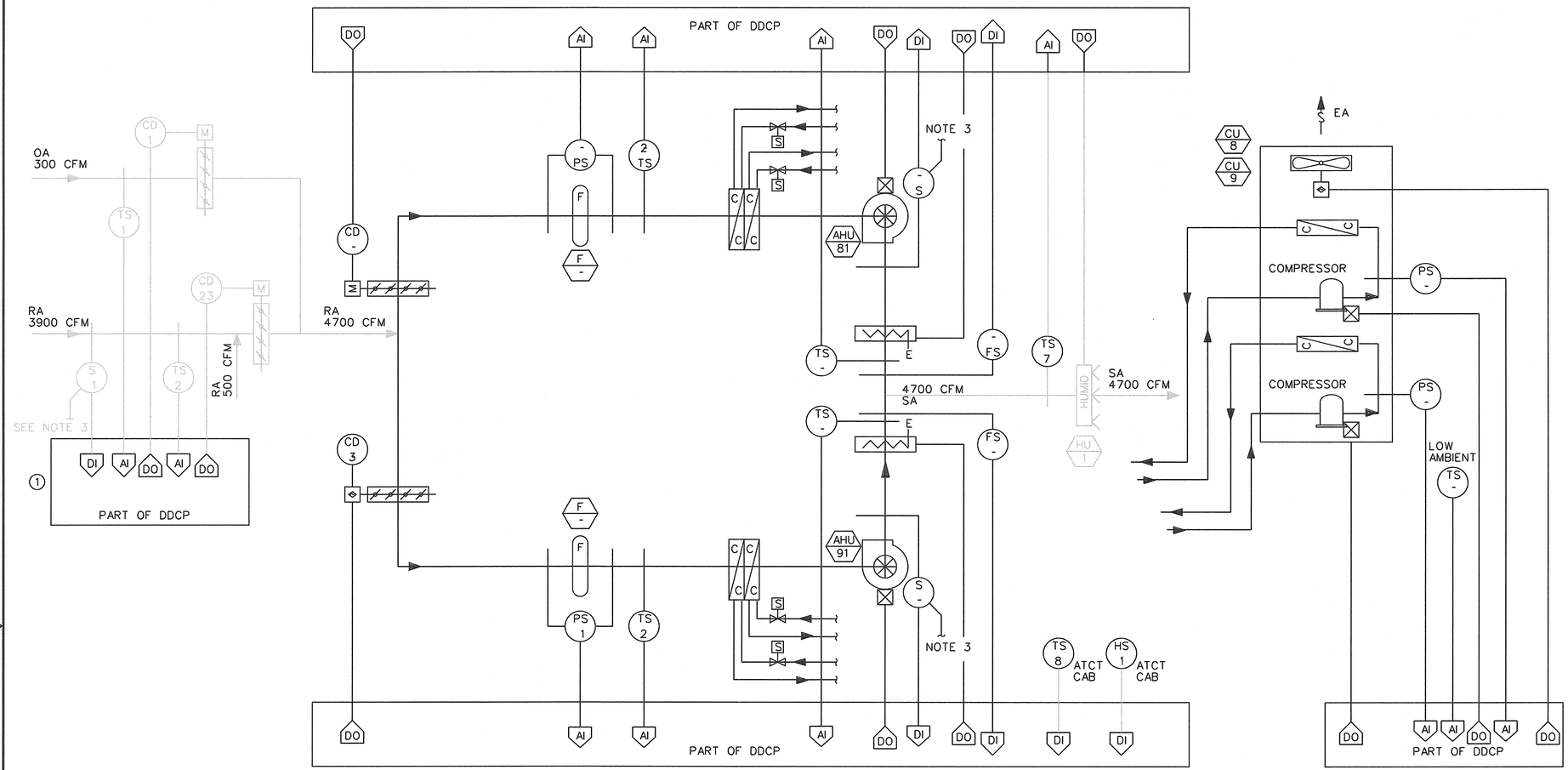

1 A M04 TEMPERATURE CONTROL AND AIR FLOW DIAGRAM AHU-81 AND AHU-91 (ATCT JUNCTION LEVEL)

SCALE: NTS

1 A M04 TEMPERATURE CONTROL AND AIR FLOW DIAGRAM CU-8 AND CU-9 (GROUND LEVEL)

SCALE: NTS

NOTES:

1. FOR GENERAL NOTES, SEE DRAWING M01.
2. FOR SEQUENCE OF OPERATION, SEE SPECIFICATION SECTION 15975.
3. PROVIDE CONNECTION TO THE FIRE ALARM CONTROL PANEL.

GENERAL NOTES:

REFERENCE SHEET M19 FOR GENERAL NOTES THAT ARE APPLICABLE TO ALL SHEETS.

KEY NOTES:

1. PROVIDE NEW CONTROLS INCLUDING, DEVICES, CONTROLLERS, PANELS. PROVIDE CONDUIT (3/4" EMT, MIN.), AND WIRE AS REQUIRED TO PROVIDE A FULLY FUNCTIONAL SYSTEM. EXISTING WIRING AND CONDUIT FROM PANELS TO DEVICES MAY BE REUSED AT THE CONTRACTORS OPTION. WIRE SPLICES ARE NOT ALLOWED, USE TERMINAL STRIPS IF REQUIRED.

MECHANICAL LEGENDS

- EXISTING HVAC EQUIPMENT/MATERIAL
- DEMO HVAC EQUIPMENT/MATERIAL
- NEW HVAC EQUIPMENT/MATERIAL

REV	APPROVED DATE	DESCRIPTION	JCN	REDLINE DATE	APVD
B	04/01/2015	HVAC REPLACEMENT PROJECT			
1	01/12/2000	AS-BUILT PER CONTRACTOR MARK-UP			AR

DEPARTMENT OF TRANSPORTATION
FEDERAL AVIATION ADMINISTRATION
ATO - TECHNICAL OPERATIONS CENTRAL SERVICE AREA

ATCT

HVAC CONTROL DIAGRAMS

LITTLE ROCK BILL & HILLARY CLINTON NATL ARPT/ADAMS FIELD AR

REVIEWED BY	SUBMITTED BY	APPROVED BY
	ERBEY FERNANDEZ	JOHNNIE L. WHITE
	PROGRAM IMPLEMENTATION ENGINEER	SUPERVISOR OF SECTION, ASW-457

DESIGNED DP
DRAWN JM
CHECKED ME
ISSUED BY ENGINEERING SERVICES INFRASTRUCTURE
DATE 07/07/1997 JCN
DRAWING NO LIT-ATCT-M04 REV B

ISSUED FOR:

LIT-ATCT-M04.DGN 4/22/2015 10:04:07 AM Andrew Schumacher

EDMS LIT-ATCT-M04.DGN

THIS DRAWING PRODUCED ON ASW REGION MICROSTATION SYSTEM

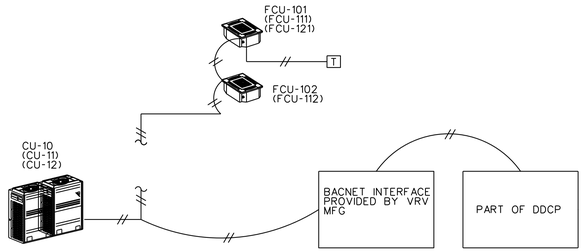

TEMPERATURE CONTROL DIAGRAM FCU-101, 102/CU-10 AND FCU-111, 112/CU-11 (ATCT L3 INTERMEDIATE LEVEL) FCU-121/CU-12 (ROOF ACCESS LEVEL)

NOT TO SCALE

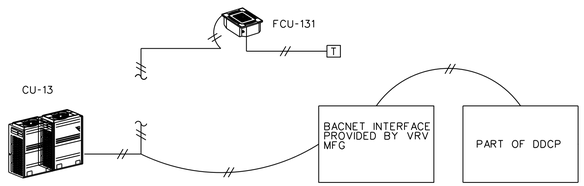

TEMPERATURE CONTROL DIAGRAM FCU-131 AND CU-13 CU-13 ON WALKWAY EXTERIOR, FCU-131 IN SUBJUCTION

NOT TO SCALE

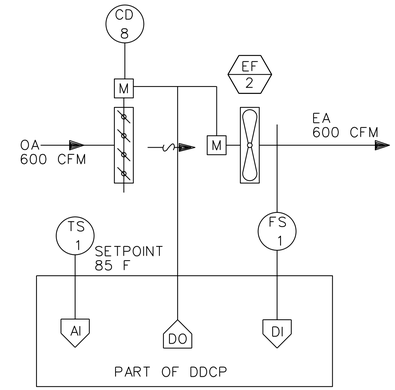

EXHAUST CONTROL AND AIR FLOW DIAGRAM EXHAUST FAN EF-2 (ATCT TOP INTERMEDIATE LEVEL)

NOT TO SCALE

NOTES:

1. FOR GENERAL NOTES, SEE DRAWING M01.
2. FOR SEQUENCE OF OPERATION, SEE SPECIFICATION SECTION 15975.

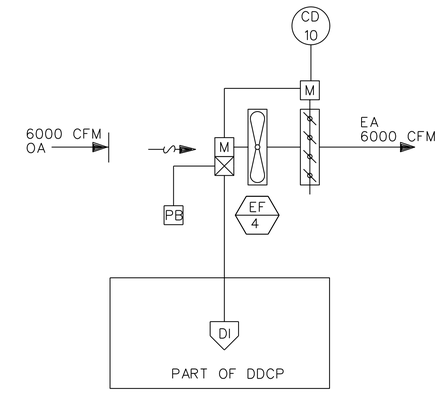

EXHAUST CONTROL AND AIR FLOW DIAGRAM EXHAUST FAN EF-4 (ATCT PENTHOUSE)

NOT TO SCALE

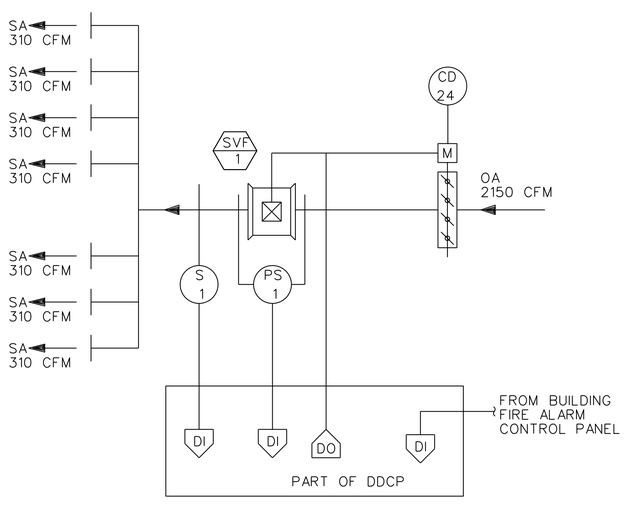

SUPPLY VENTILATION CONTROL AND AIR FLOW DIAGRAM SUPPLY VENTILATION FAN SVF-1 (L2 INTERMEDIATE LEVEL)

NOT TO SCALE

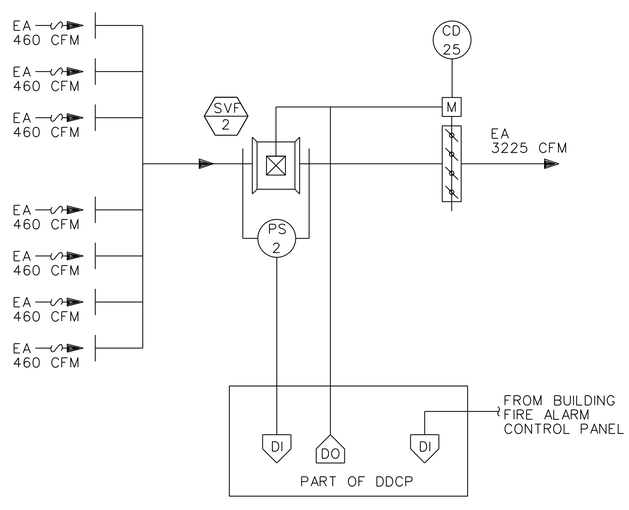

EXHAUST VENTILATION CONTROL AND AIR FLOW DIAGRAM EXHAUST VENTILATION FAN SVF-2 (L3 INTERMEDIATE LEVEL)

NOT TO SCALE

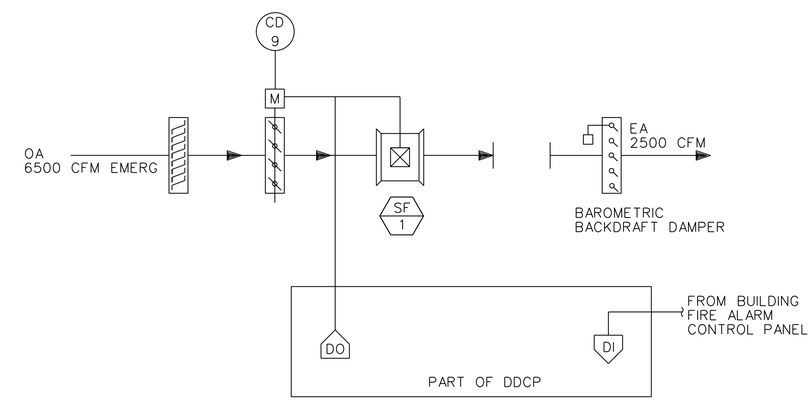

EXHAUST CONTROL AND AIR FLOW DIAGRAM STAIRWELL PRESSURIZATION FAN SF-1

NOT TO SCALE

REV	APPROVED DATE	DESCRIPTION	JCN	REDLINE DATE	APVD
D	04/02/2018	AS-BUILT (A. SCHUMACHER)	1100154	04/02/2018	AS
C	10/12/2017	AS-BUILT (T. CLAYTON).	1100154	10/12/2017	TC
B	04/01/2015	HVAC REPLACEMENT PROJECT			JLW
1	01/12/2000	AS-BUILT PER CONTRACTOR MARK-UP			AR

DEPARTMENT OF TRANSPORTATION
FEDERAL AVIATION ADMINISTRATION
ATO - TECHNICAL OPERATIONS CENTRAL SERVICE AREA

ATCT

HVAC CONTROL DIAGRAMS

LITTLE ROCK BILL & HILLARY CLINTON NATL ARPT/ADAMS FIELD AR

REVIEWED BY	SUBMITTED BY	APPROVED BY
	ERBEY FERNANDEZ	JOHNNIE L. WHITE
	PROGRAM IMPLEMENTATION ENGR.	SUPERVISOR OF SECTION, ASW-457

DESIGNED DP | ISSUED BY ENGINEERING SERVICES INFRASTRUCTURE | DATE 07/07/1997 | JCN
DRAWN JM | DRAWING NO LIT-ATCT-M05 | REV D
CHECKED ME

ISSUED FOR: AS-BUILT

LIT-ATCT-M05.DGN 4/4/2018 6:59:41 AM Jacqueline CTR Curlie

EDM: LIT-ATCT-M05.DGN

THIS DRAWING PRODUCED ON ASW REGION MICROSTATION SYSTEM

NOTES:

1. FOR GENERAL NOTES, SEE DRAWING M01.
2. FOR SEQUENCE OF OPERATION, SEE SPECIFICATION SECTION 15975.
3. PROVIDED CONNECTION TO THE FIRE ALARM CONTROL PANEL.

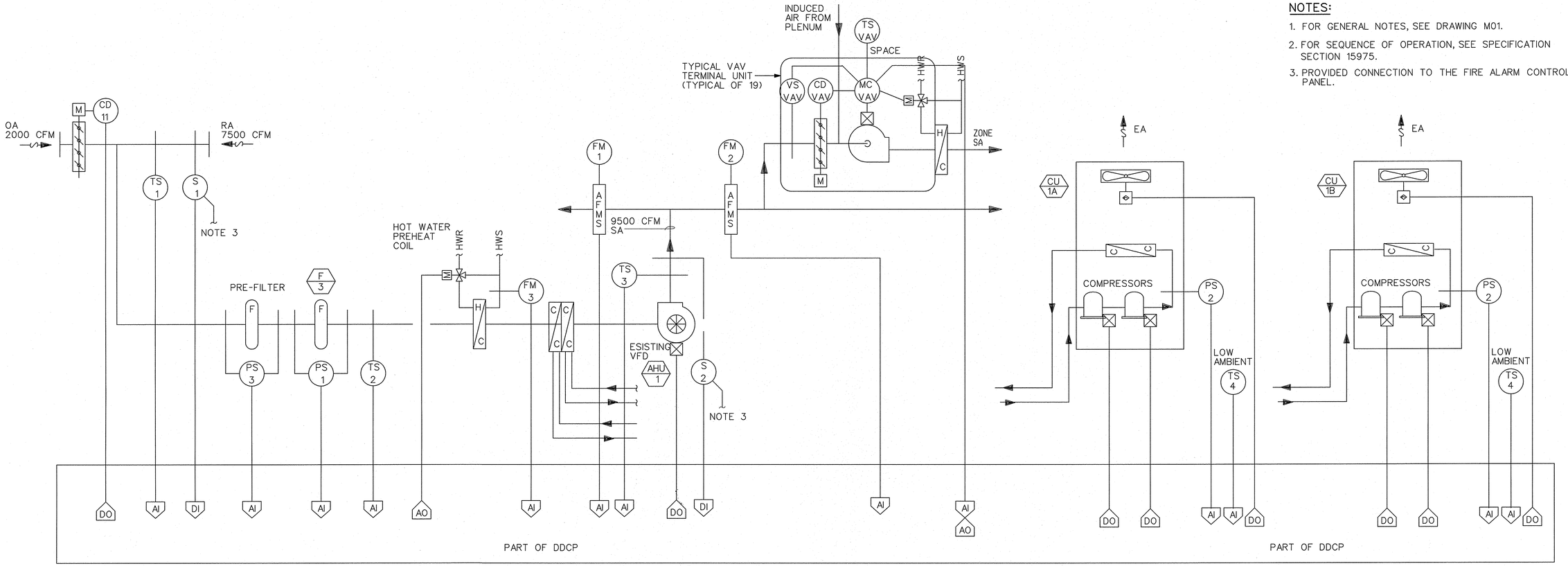

TEMPERATURE CONTROL AND AIR FLOW DIAGRAM
VAV AIR HANDLING UNIT AHU-1 (BASE BUILDING)
NOT TO SCALE

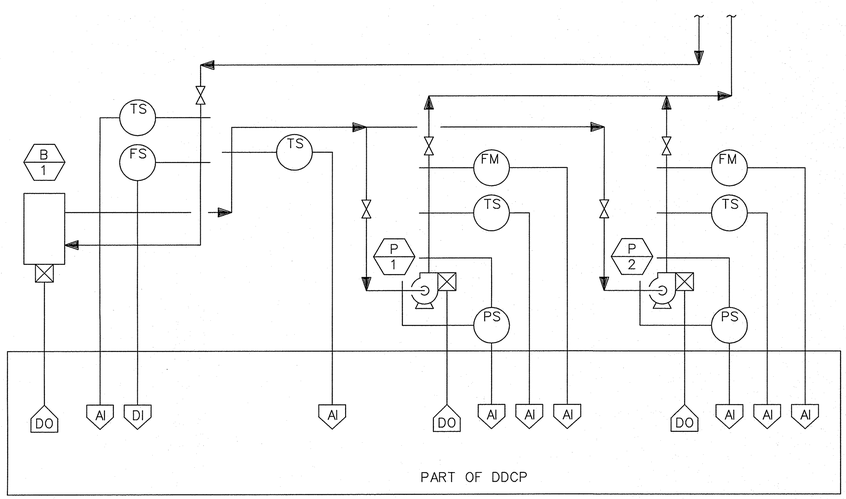

BOILER AND PUMP CONTROL FLOW DIAGRAM
BOILER B-1, PUMPS P-1,2 (BASE BUILDING)
NOT TO SCALE

REV	APPROVED DATE	DESCRIPTION	JCN	REDLINE DATE	APVD
C	10/12/2017	AS-BUILT (T. CLAYTON).	1100154	10/12/2017	TC
B	04/01/2015	HVAC REPLACEMENT PROJECT			JLW
1	01/12/2000	AS-BUILT PER CONTRACTOR MARK-UP			AR

DEPARTMENT OF TRANSPORTATION
FEDERAL AVIATION ADMINISTRATION
ATO - TECHNICAL OPERATIONS CENTRAL SERVICE AREA

ATCT
HVAC CONTROL DIAGRAMS BASE BUILDING

LITTLE ROCK BILL & HILLARY CLINTON NATL ARPT/ADAMS FIELD AR

REVIEWED BY	SUBMITTED BY	APPROVED BY
	ERBEY FERNANDEZ	JOHNNIE L. WHITE
	PROGRAM IMPLEMENTATION ENGR.	SUPERVISOR OF SECTION, ASW-457

DESIGNED DP
DRAWN JM
CHECKED ME
ISSUED BY ENGINEERING SERVICES INFRASTRUCTURE
DATE 07/07/1997 JCN
DRAWING NO LIT-ATCT-M06 REV C

ISSUED FOR: AS-BUILT

LIT-ATCT-M06.DGN 10/26/2017 4:06:58 PM Paul/CTR O'Donnell

EDMS LIT-ATCT-M06.DGN

THIS DRAWING PRODUCED ON ASW REGION MICROSTATION SYSTEM

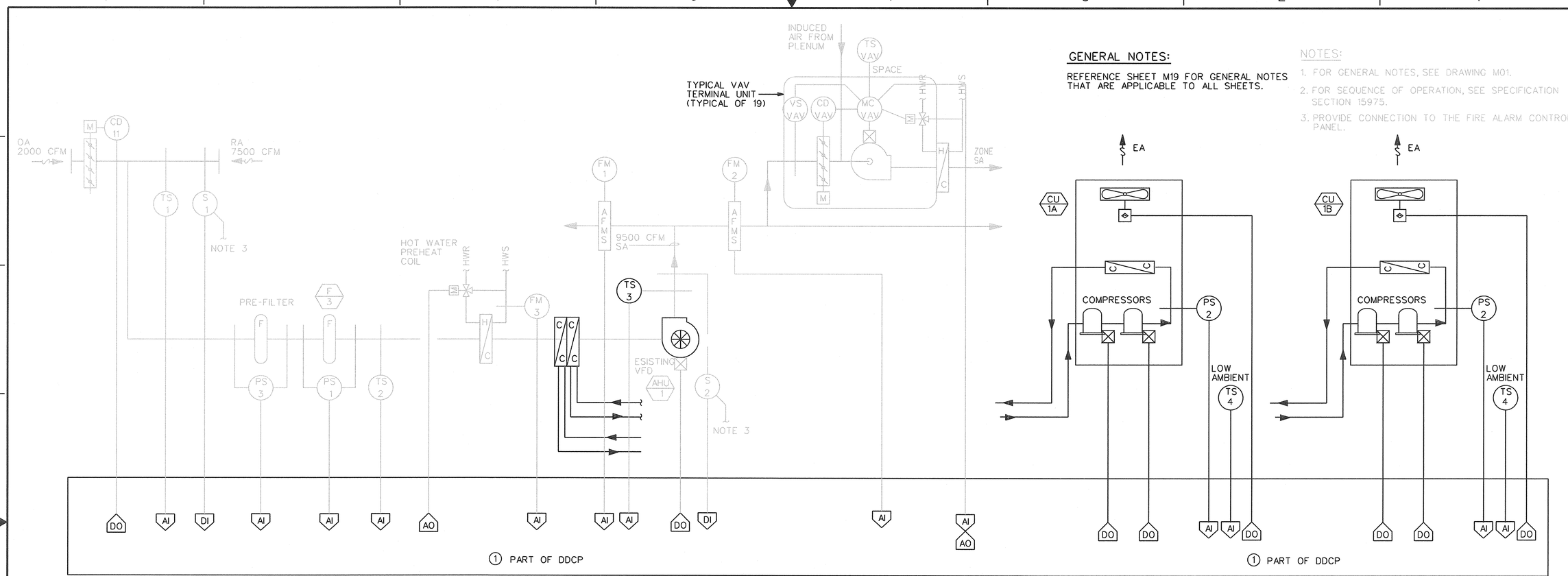

TEMPERATURE CONTROL AND AIR FLOW DIAGRAM
VAV AIR HANDLING UNIT AHU-1 (BASE BUILDING)
NOT TO SCALE

GENERAL NOTES:

REFERENCE SHEET M19 FOR GENERAL NOTES THAT ARE APPLICABLE TO ALL SHEETS.

NOTES:

1. FOR GENERAL NOTES, SEE DRAWING M01.
2. FOR SEQUENCE OF OPERATION, SEE SPECIFICATION SECTION 15975.
3. PROVIDE CONNECTION TO THE FIRE ALARM CONTROL PANEL.

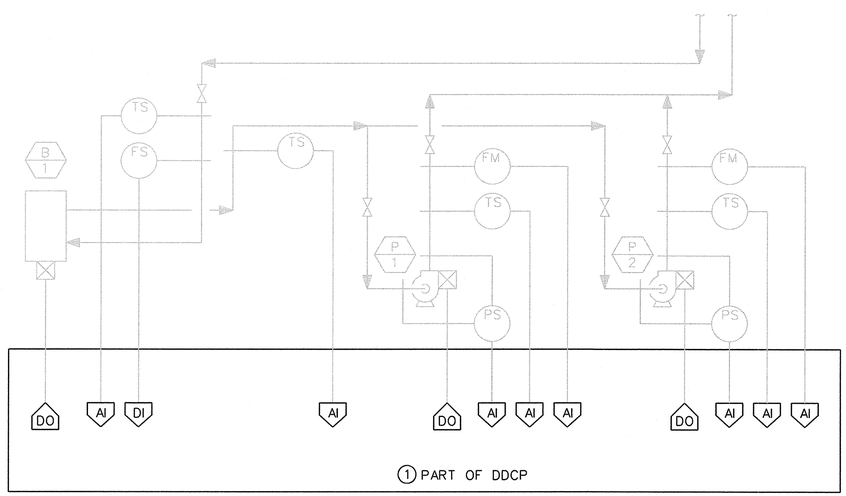

BOILER AND PUMP CONTROL FLOW DIAGRAM
BOILER B-1, PUMPS P-1,2 (BASE BUILDING)
NOT TO SCALE

KEY NOTES:

① PROVIDE NEW CONTROLS INCLUDING, DEVICES, CONTROLLERS, PANELS. PROVIDE CONDUIT (3/4" EMT, MIN.), AND WIRE AS REQUIRED TO PROVIDE A FULLY FUNCTIONAL SYSTEM. EXISTING WIRING AND CONDUIT FROM PANELS TO DEVICES MAY BE REUSED AT THE CONTRACTORS OPTION. WIRE SPLICES ARE NOT ALLOWED, USE TERMINAL STRIPS IF REQUIRED.

MECHANICAL LEGENDS

- EXISTING HVAC EQUIPMENT/MATERIAL
- DEMO HVAC EQUIPMENT/MATERIAL
- NEW HVAC EQUIPMENT/MATERIAL

REV	APPROVED DATE	DESCRIPTION	JCN	REDLINE DATE	APVD
B	04/01/2015	HVAC REPLACEMENT PROJECT			
1	01/12/2000	AS-BUILT PER CONTRACTOR MARK-UP			AR

DEPARTMENT OF TRANSPORTATION
FEDERAL AVIATION ADMINISTRATION
ATO - TECHNICAL OPERATIONS CENTRAL SERVICE AREA

ATCT
HVAC CONTROL DIAGRAMS BASE BUILDING

LITTLE ROCK BILL & HILLARY CLINTON NATL ARPT/ADAMS FIELD AR

REVIEWED BY	SUBMITTED BY	APPROVED BY
	ERBEY FERNANDEZ	JOHNNIE L. WHITE
	PROGRAM IMPLEMENTATION ENGINEER	SUPERVISOR OF SECTION, ASW-457

DESIGNED DP
DRAWN JM
CHECKED ME
ISSUED BY ENGINEERING SERVICES INFRASTRUCTURE
DATE 07/07/1997 JCN
DRAWING NO LIT-ATCT-M06 REV B

ISSUED FOR:

LIT-ATCT-M06.DGN 4/22/2015 10:07:18 AM Andrew Schumacher

EDM: LIT-ATCT-M06.DGN

THIS DRAWING PRODUCED ON ASW REGION MICROSTATION SYSTEM

GENERAL NOTES:

REFERENCE SHEET M19 FOR GENERAL NOTES THAT ARE APPLICABLE TO ALL SHEETS.

NOTES:

1. FOR GENERAL NOTES, SEE DRAWING M01.
2. FOR SEQUENCE OF OPERATION, SEE SPECIFICATION SECTION 15975.
3. PROVIDE CONNECTION TO THE FIRE ALARM CONTROL PANEL.

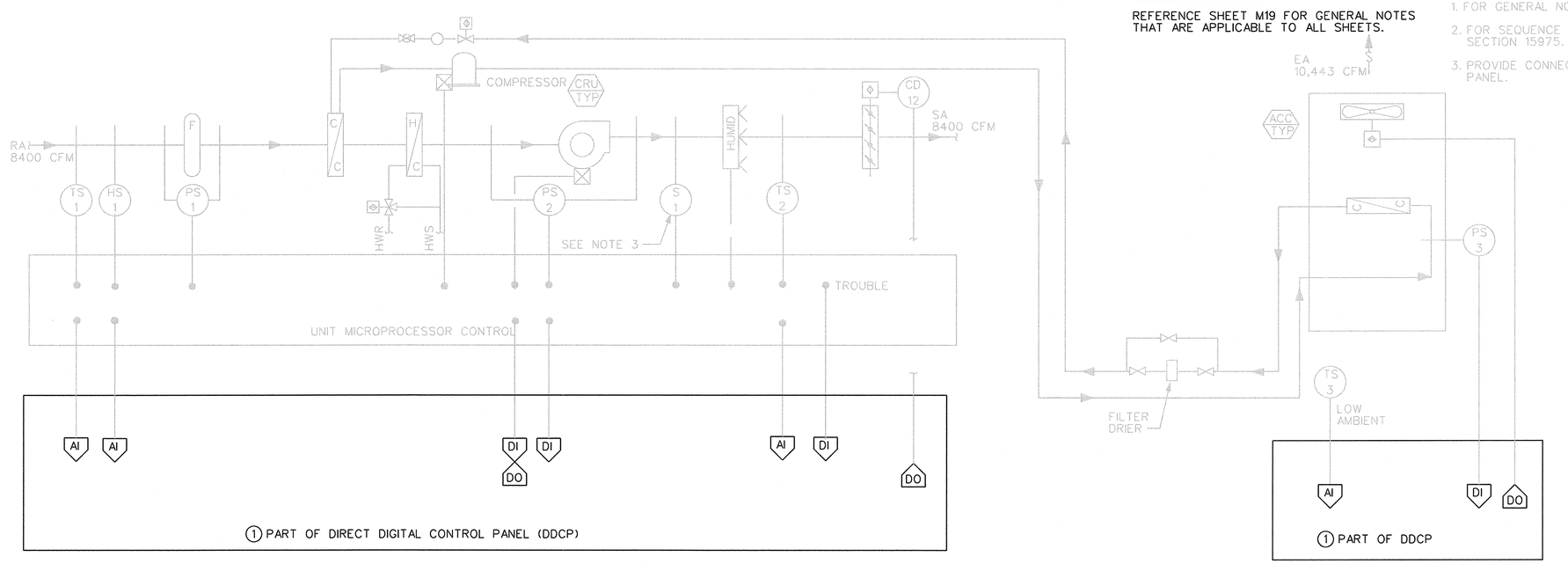

TEMPERATURE/HUMIDITY CONTROL AND AIR FLOW DIAGRAM
COMPUTER ROOM UNITS CRU-1,2,3 AND ACC-1,2,3 (BASE BUILDING)
NOT TO SCALE

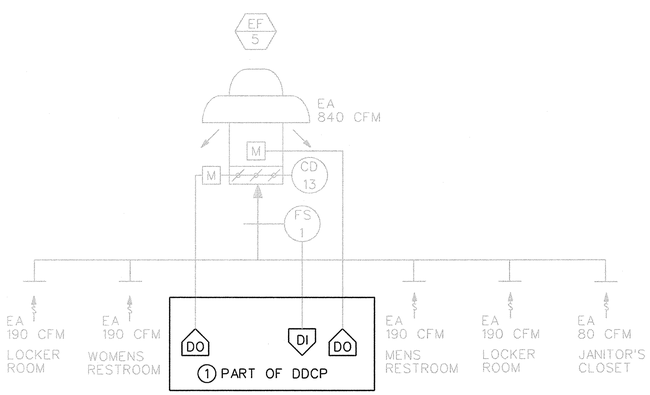

EXHAUST CONTROL AND AIR FLOW DIAGRAM
EXHAUST FAN EF-5 (BASE BUILDING RESTROOMS)
NOT TO SCALE

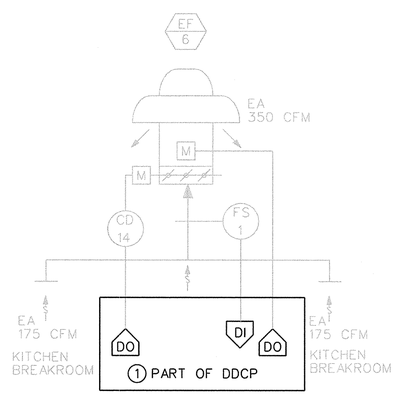

EXHAUST CONTROL AND AIR FLOW DIAGRAM
EXHAUST FAN EF-6 (BASE BUILDING BREAKROOM)
NOT TO SCALE

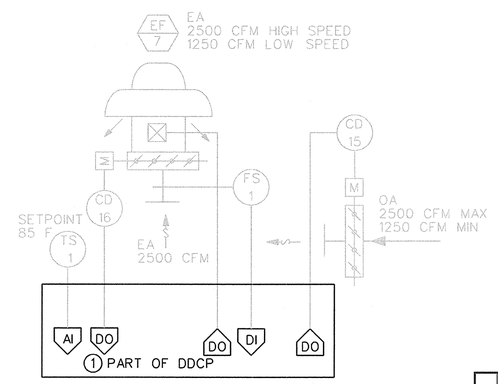

EXHAUST CONTROL AND AIR FLOW DIAGRAM
EXHAUST FAN EF-7 (PUMP ROOM)
NOT TO SCALE

KEY NOTES:

1. PROVIDE NEW CONTROLS INCLUDING, DEVICES, CONTROLLERS, PANELS. PROVIDE CONDUIT (3/4" EMT, MIN.), AND WIRE AS REQUIRED TO PROVIDE A FULLY FUNCTIONAL SYSTEM. EXISTING WIRING AND CONDUIT FROM PANELS TO DEVICES MAY BE REUSED AT THE CONTRACTORS OPTION. WIRE SPLICES ARE NOT ALLOWED, USE TERMINAL STRIPS IF REQUIRED.

MECHANICAL LEGENDS

- EXISTING HVAC EQUIPMENT/MATERIAL
- DEMO HVAC EQUIPMENT/MATERIAL
- NEW HVAC EQUIPMENT/MATERIAL

REV	APPROVED DATE	DESCRIPTION	JCN	REDLINE DATE	APVD
B	04/01/2015	HVAC REPLACEMENT PROJECT			
1	01/12/2000	AS-BUILT PER CONTRACTOR MARK-UP			AR

DEPARTMENT OF TRANSPORTATION
FEDERAL AVIATION ADMINISTRATION
ATO - TECHNICAL OPERATIONS CENTRAL SERVICE AREA

ATCT
HVAC CONTROL DIAGRAMS BASE BUILDING

LITTLE ROCK BILL & HILLARY CLINTON NATL ARPT/ADAMS FIELD AR

REVIEWED BY	SUBMITTED BY	APPROVED BY
	ERBEY FERNANDEZ	JOHNNIE L. WHITE
	PROGRAM IMPLEMENTATION ENGINEER	SUPERVISOR OF SECTION, ASW-457

DESIGNED DP
DRAWN JM
CHECKED ME
ISSUED BY ENGINEERING SERVICES INFRASTRUCTURE
DATE 07/07/1997 JCN
DRAWING NO LIT-ATCT-M07 REV B

ISSUED FOR:

LIT-ATCT-M07.DGN 4/22/2015 10:08:50 AM Andrew Schumacher

EDM: LIT-ATCT-M07.DGN

THIS DRAWING PRODUCED ON ASW REGION MICROSTATION SYSTEM

NOTES:

1. FOR GENERAL NOTES, SEE DRAWING M01.
2. FOR SEQUENCE OF OPERATION, SEE SPECIFICATION SECTION 15975.
3. PROVIDED CONNECTION TO THE FIRE ALARM CONTROL PANEL.

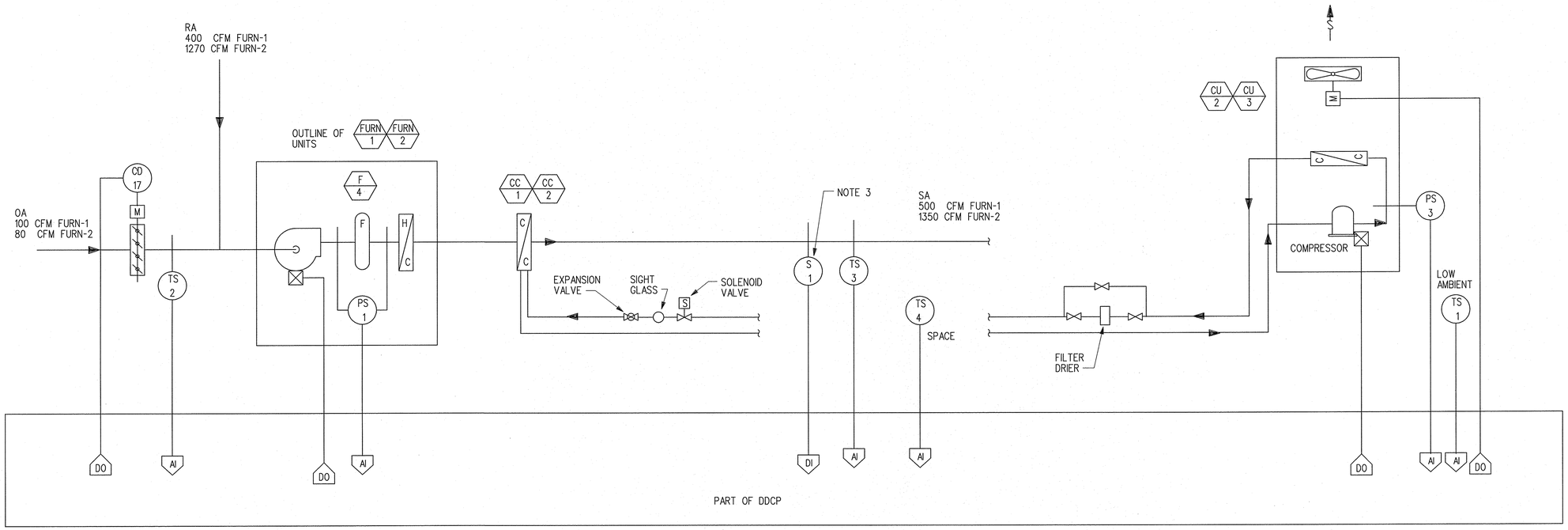

TEMPERATURE CONTROL AND AIR FLOW DIAGRAM, FURN-1, 2; CC-1, 2 (ESU BUILDING)

NOT TO SCALE

REV	APPROVED DATE	DESCRIPTION	JCN	REDLINE DATE	APVD
C	10/12/2017	AS-BUILT (T. CLAYTON).	1100154	10/12/2017	TC
B	04/01/2015	HVAC REPLACEMENT PROJECT			JLW
1	01/12/2000	AS-BUILT PER CONTRACTOR MARK-UP			AR

DEPARTMENT OF TRANSPORTATION
FEDERAL AVIATION ADMINISTRATION
ATO - TECHNICAL OPERATIONS **CENTRAL SERVICE AREA**

ATCT

HVAC CONTROL DIAGRAMS ESU BUILDING

LITTLE ROCK BILL & HILLARY CLINTON NATL ARPT/ADAMS FIELD AR

REVIEWED BY

SUBMITTED BY: *ERBEY FERNANDEZ*
PROGRAM IMPLEMENTATION ENGR.

APPROVED BY: *JOHNNIE L. WHITE*
SUPERVISOR OF SECTION, ASW-457

DESIGNED DP
DRAWN JM
CHECKED ME

ISSUED BY: ENGINEERING SERVICES INFRASTRUCTURE

DATE 07/07/1997 JCN

DRAWING NO LIT-ATCT-M08 REV C

ISSUED FOR: AS-BUILT

EDM: LIT-ATCT-M08.DGN

LIT-ATCT-M08.DGN
10/26/2017 4:07:36 PM Paul CTR O'Donnell

THIS DRAWING PRODUCED ON ASW REGION MICROSTATION SYSTEM

GENERAL NOTES:

REFERENCE SHEET M19 FOR GENERAL NOTES THAT ARE APPLICABLE TO ALL SHEETS.

KEY NOTES:

(1) PROVIDE NEW CONTROLS INCLUDING, DEVICES, CONTROLLERS, PANELS. PROVIDE CONDUIT (3/4" EMT, MIN.), AND WIRE AS REQUIRED TO PROVIDE A FULLY FUNCTIONAL SYSTEM. EXISTING WIRING AND CONDUIT FROM PANELS TO DEVICES MAY BE REUSED AT THE CONTRACTORS OPTION. WIRE SPLICES ARE NOT ALLOWED, USE TERMINAL STRIPS IF REQUIRED.

NOTES:

1. FOR GENERAL NOTES, SEE DRAWING M01.
2. FOR SEQUENCE OF OPERATION, SEE SPECIFICATION SECTION 15975.
3. PROVIDE CONNECTION TO THE FIRE ALARM CONTROL PANEL.

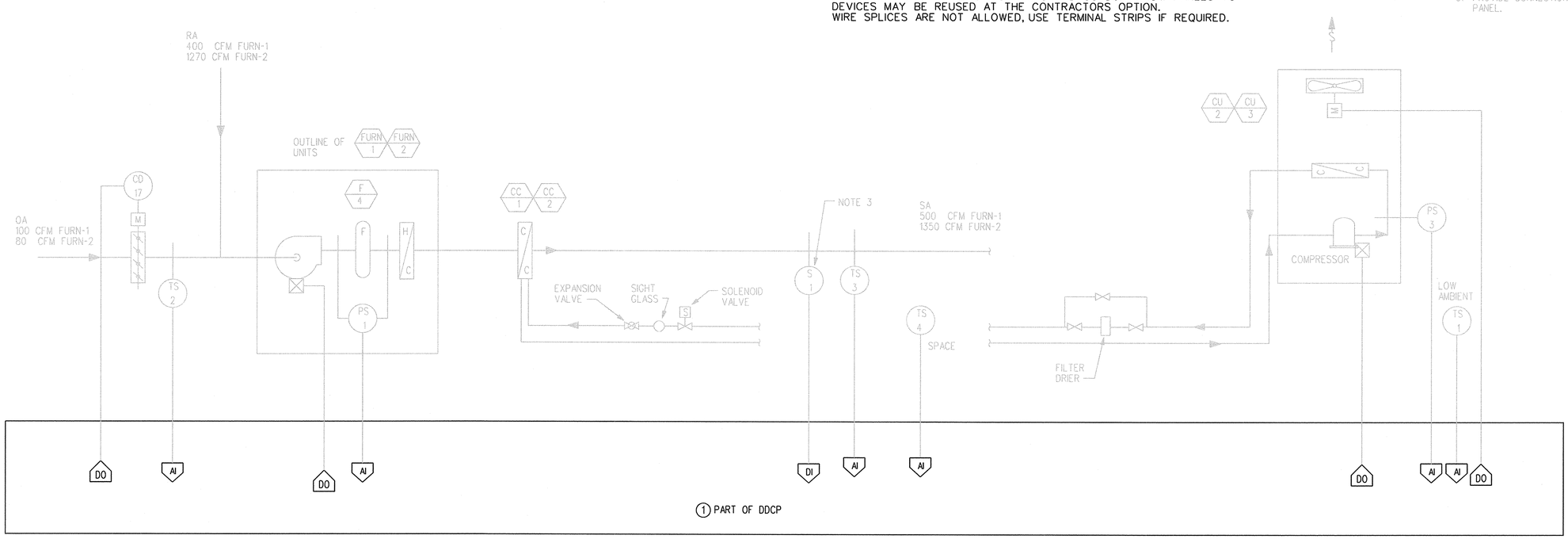

TEMPERATURE CONTROL AND AIR FLOW DIAGRAM
FURN-1, 2; CC-1, 2 (ESU BUILDING)
NOT TO SCALE

MECHANICAL LEGENDS

- EXISTING HVAC EQUIPMENT/MATERIAL
- DEMO HVAC EQUIPMENT/MATERIAL
- NEW HVAC EQUIPMENT/MATERIAL

REV	APPROVED DATE	DESCRIPTION	JCN	REDLINE DATE	APVD
B	04/01/2015	HVAC REPLACEMENT PROJECT			
1	01/12/2000	AS-BUILT PER CONTRACTOR MARK-UP			AR

DEPARTMENT OF TRANSPORTATION
FEDERAL AVIATION ADMINISTRATION
ATO - TECHNICAL OPERATIONS CENTRAL SERVICE AREA

ATCT
HVAC CONTROL DIAGRAMS ESU BUILDING

LITTLE ROCK BILL & HILLARY CLINTON NATL ARPT/ADAMS FIELD AR

REVIEWED BY	SUBMITTED BY	APPROVED BY
	ERBEY FERNANDEZ	JOHNNIE L. WHITE
	PROGRAM IMPLEMENTATION ENGINEER	SUPERVISOR OF SECTION, ASW-457

DESIGNED DP
DRAWN JM
CHECKED ME
ISSUED BY ENGINEERING SERVICES INFRASTRUCTURE
DATE 07/07/1997 JCN
DRAWING NO LIT-ATCT-M08 REV B

ISSUED FOR:

LIT-ATCT-M08.DGN 4/22/2015 10:10:03 AM Andrew Schumacher

EDM: LIT-ATCT-M08.DGN

THIS DRAWING PRODUCED ON ASW REGION MICROSTATION SYSTEM

NOTES:

1. FOR GENERAL NOTES, SEE DRAWING M01.
2. FOR SEQUENCE OF OPERATION, SEE SPECIFICATION SECTION 15975.
3. PROVIDED CONNECTION TO THE FIRE ALARM CONTROL PANEL.

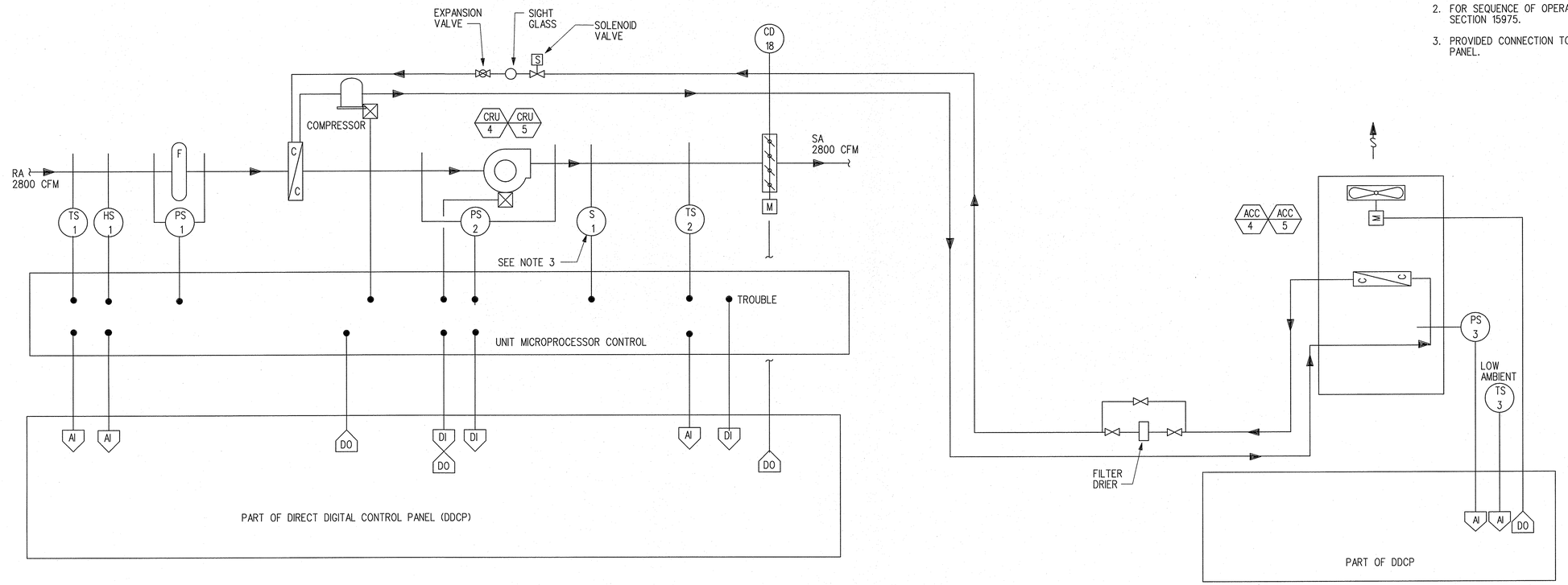

TEMPERATURE/HUMIDITY CONTROL AND AIR FLOW DIAGRAM

COMPUTER ROOM UNIT CRU-4, CRU-5 AND ACC-4, ACC-5

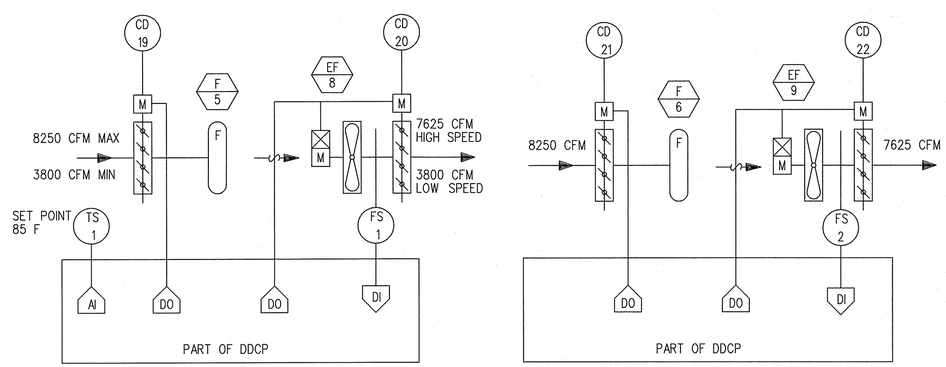

EXHAUST CONTROL AND AIR FLOW DIAGRAM

EXHAUST FANS EF-8 AND EF-9 (ESU BUILDING ENGINE GENERATOR ROOM)

REV	APPROVED DATE	DESCRIPTION	JCN	REDLINE DATE	APVD
C	10/12/2017	AS-BUILT (T. CLAYTON).	1100154	10/12/2017	TC
B	04/01/2015	HVAC REPLACEMENT PROJECT			JLW
1	01/12/2000	AS-BUILT PER CONTRACTOR MARK-UP			AR

DEPARTMENT OF TRANSPORTATION
FEDERAL AVIATION ADMINISTRATION
ATO - TECHNICAL OPERATIONS CENTRAL SERVICE AREA

ATCT
HVAC CONTROL DIAGRAMS ESU BUILDING

LITTLE ROCK BILL & HILLARY CLINTON NATL ARPT/ADAMS FIELD AR

REVIEWED BY	SUBMITTED BY	APPROVED BY
	ERBEY FERNANDEZ	JOHNNIE L. WHITE
	PROGRAM IMPLEMENTATION ENGR.	SUPERVISOR OF SECTION, ASW-457
DESIGNED DP	ISSUED BY ENGINEERING SERVICES INFRASTRUCTURE	DATE 07/07/1997 JCN
DRAWN JM		DRAWING NO LIT-ATCT-M09 REV C
CHECKED ME		

ISSUED FOR: AS-BUILT

LIT-ATCT-M09.DGN 10/26/2017 4:14:33 PM PaulCTR O'Donnell

EDM: LIT-ATCT-M09.DGN

THIS DRAWING PRODUCED ON ASW REGION MICROSTATION SYSTEM

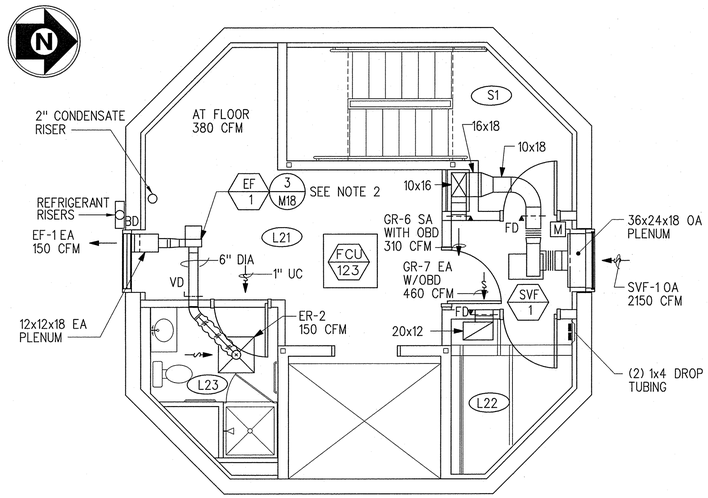

FIN FL ELEV 48'-0"

L2 INTERMEDIATE LEVEL PLAN
SCALE: 1/4" = 1'-0"

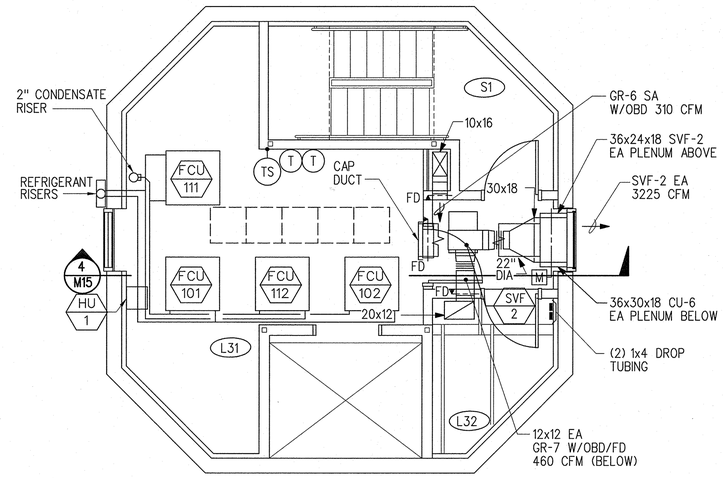

FIN FL ELEV 64'-0"

L3 INTERMEDIATE LEVEL PLAN
SCALE: 1/4" = 1'-0"

ROOM SCHEDULE	
NO.	NAME
G1	LOBBY
G2	AIRPORT LIGHTING
G3	CABLE CHASE
G4	PUMP ROOM
RA1	ROOF ACCESS
RA2	CABLE CHASE
RA3	ELEVATOR MACHINE ROOM
L11	LOBBY
L12	CABLE CHASE
L21	LOBBY
L22	CABLE CHASE
L23	RESTROOM/SHOWER
L31	EQUIPMENT ROOM
L32	CABLE CHASE
S1	STAIR

NOTES:

1. FOR GENERAL NOTES, SEE DRAWING M01.
2. EF-1 IS INTERLOCKED WITH LIGHT SWITCH IN ROOM L23.
3. EXHAUST OUTLET LOCATED 10 FT (MIN) ABOVE PTAC WALL LOUVER.
4. INTERLOCK CONTROL DAMPER WITH ELEVATOR EQUIPMENT.
5. REFERENCE DRAWING M05 FOR SF-1, SVF-1 AND SVF-2 CONTROL DIAGRAMS.

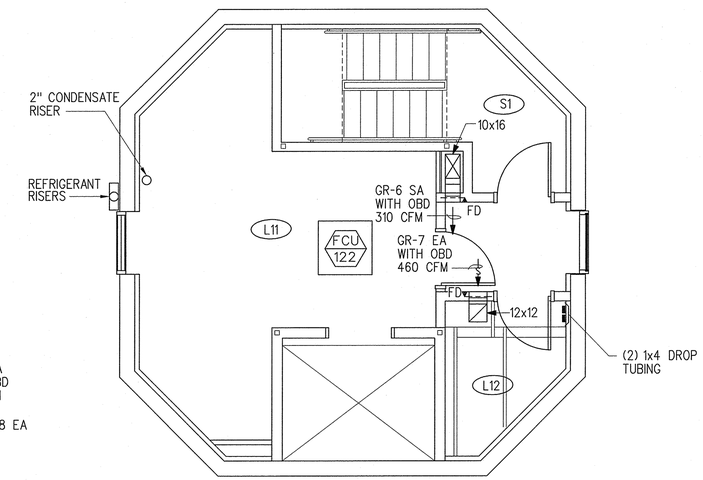

FIN FL ELEV 32'-0"

L1 INTERMEDIATE LEVEL PLAN
SCALE: 1/4" = 1'-0"

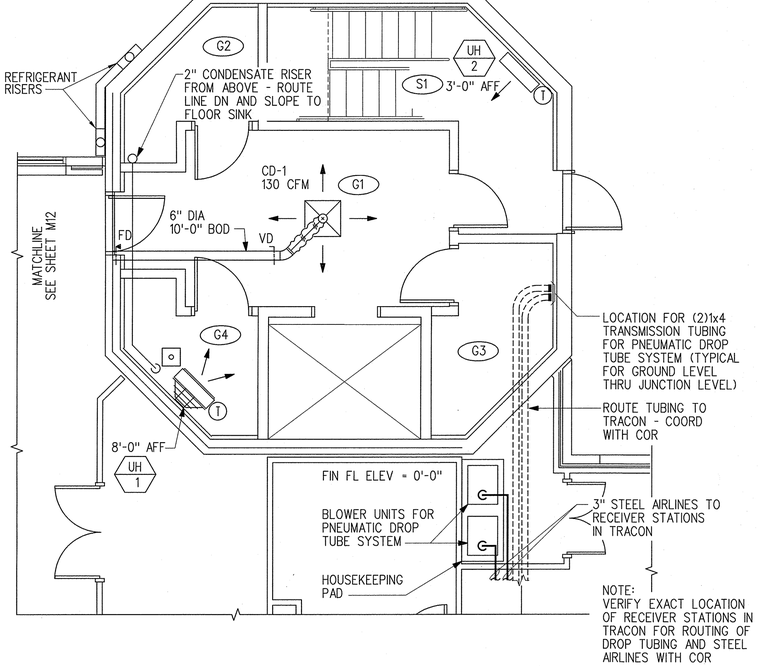

GROUND LEVEL PLAN
SCALE: 1/4" = 1'-0"

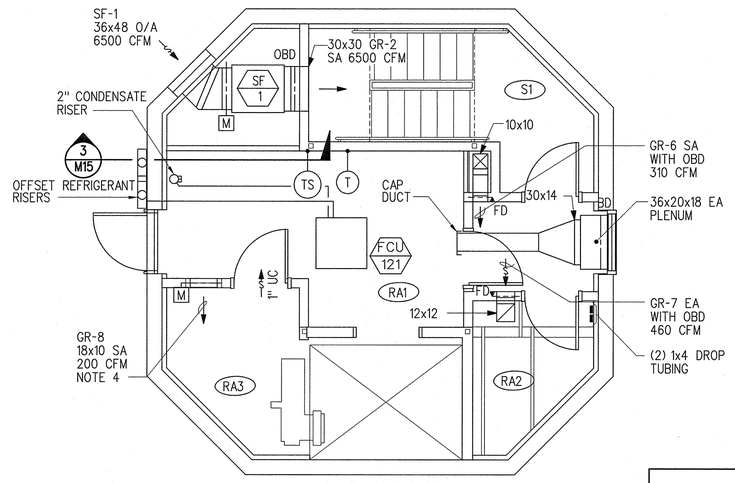

FIN FL ELEV 16'-0"

ROOF ACCESS LEVEL PLAN
SCALE: 1/4" = 1'-0"

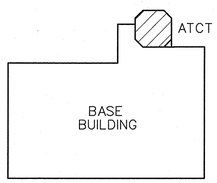

KEY PLAN

ESU

4' 0 4' 8'
SCALE: 1/4" = 1'-0"

REV	APPROVED DATE	DESCRIPTION	JCN	REDLINE DATE	APVD
D	01/26/2018	AS-BUILT (T. CLAYTON).	1100154	01/17/2018	TC
C	10/12/2017	AS-BUILT (T. CLAYTON).	1100154	10/12/2017	TC
B	04/01/2015	HVAC REPLACEMENT PROJECT	705967		JLW
1	01/12/2000	AS-BUILT PER CONTRACTOR MARK-UP			AR

DEPARTMENT OF TRANSPORTATION
FEDERAL AVIATION ADMINISTRATION
ATO - TECHNICAL OPERATIONS CENTRAL SERVICE AREA

ATCT
HVAC FLOOR PLANS

LITTLE ROCK BILL & HILLARY CLINTON NATL ARPT/ADAMS FIELD AR

REVIEWED BY	SUBMITTED BY	APPROVED BY
	ERBEY FERNANDEZ	JOHNNIE L. WHITE
	PROGRAM IMPLEMENTATION ENGR.	SUPERVISOR OF SECTION, ASW-457
DESIGNED DP	ISSUED BY ENGINEERING SERVICES INFRASTRUCTURE	DATE 07/07/1997 JCN
DRAWN JM		DRAWING NO LIT-ATCT-M10 REV D
CHECKED ME		

ISSUED FOR: AS-BUILT

LIT-ATCT-M10.DGN 2/22/2018 1:19:54 PM Paul CTR O'Donnell

EDM: LIT-ATCT-M10.DGN

THIS DRAWING PRODUCED ON ASW REGION MICROSTATION SYSTEM

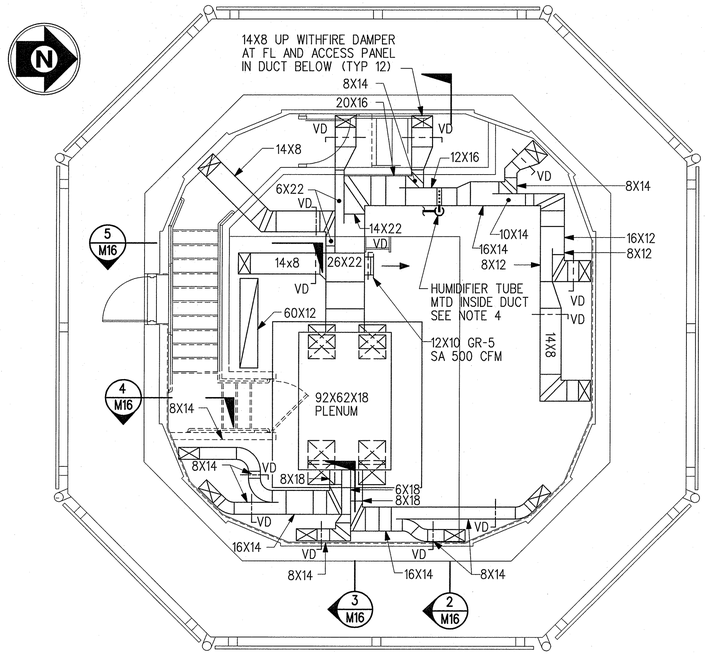

FIN FL ELEV = 120'-0"

WALKWAY LEVEL PLAN

SCALE: 1/4" = 1'-0"

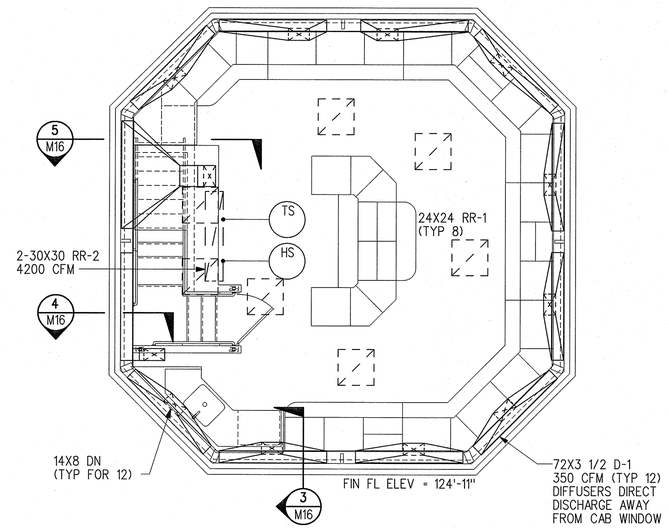

FIN FL ELEV = 124'-11"

CAB LEVEL PLAN

SCALE: 1/4" = 1'-0"

ROOM SCHEDULE	
NO.	NAME
TI1	CONDENSER ROOM
TI2	CABLE CHASE
SJ1	READY ROOM
SJ2	CABLE CHASE
SJ3	MEN
SJ4	WOMEN
J1	AHU ROOM
J2	CABLE CHASE
S1	STAIR
S2	CAB STAIR

NOTES:

1. FOR GENERAL NOTES, SEE DRAWING M01.
2. FOR PENTHOUSE FLOOR PLAN SEE DRAWING M15.
3. WALL MOUNT HUMIDIFIER RESERVOIR. ROUTE 3/4" DRAIN LINE TO NEAREST FLOOR DRAIN. REFERENCE DRAWING P03.
4. ROUTE STEAM LINE DOWN TO HU-1 RESERVOIR.
5. REFERENCE DRAWING P03 FOR HU-1 CW PIPING.

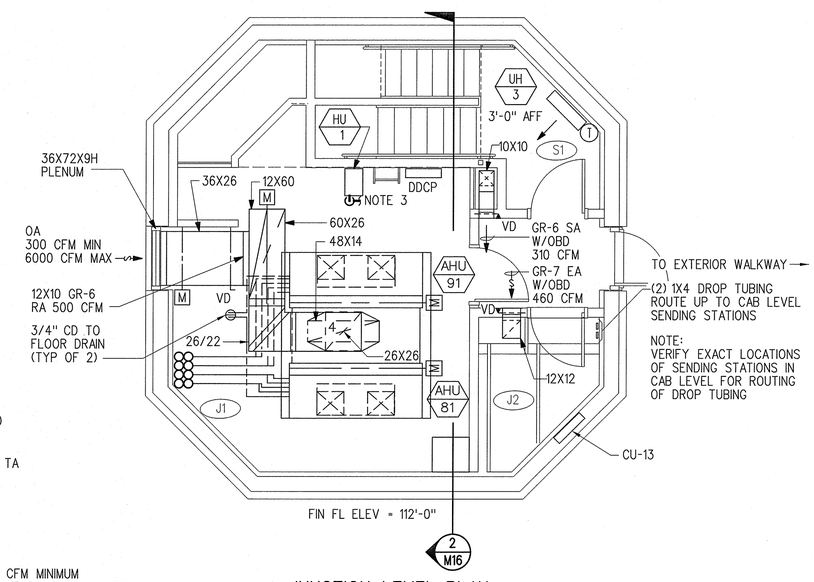

FIN FL ELEV = 112'-0"

JUNCTION LEVEL PLAN

SCALE: 1/4" = 1'-0"

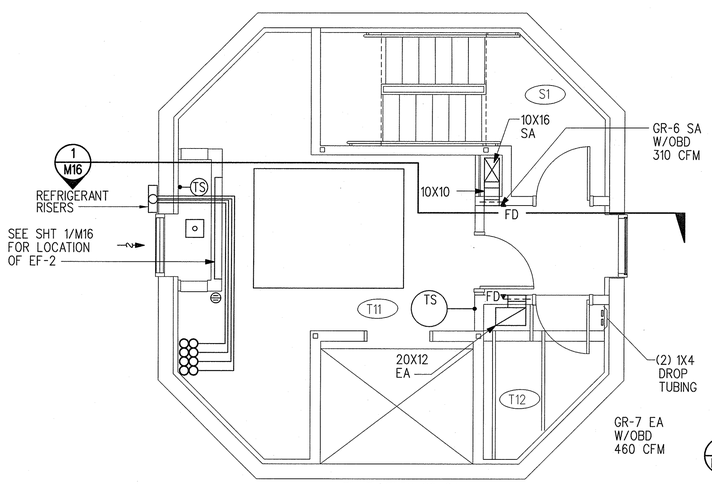

FIN FL ELEV 80'-0"

TOP INTERMEDIATE LEVEL PLAN

SCALE: 1/4" = 1'-0"

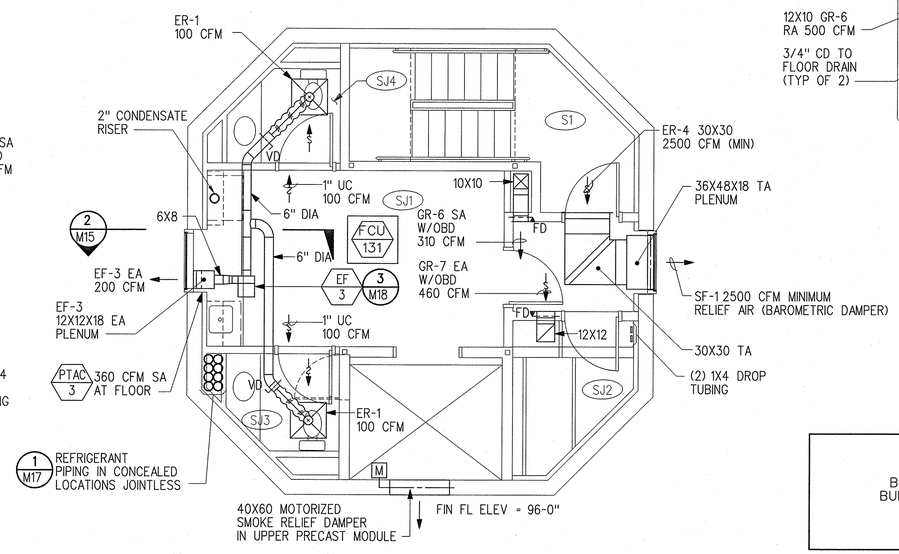

SUBJUNCTION LEVEL PLAN

SCALE: 1/4" = 1'-0"

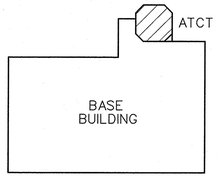

KEY PLAN

ESU

4' 0 4' 8'

SCALE: 1/4" = 1'-0"

REV	APPROVED DATE	DESCRIPTION	JCN	REDLINE DATE	APVD
D	01/26/2018	AS-BUILT (T. CLAYTON).	1100154	01/17/2018	TC
C	10/12/2017	AS-BUILT (T. CLAYTON).	1100154	10/12/2017	TC
B	04/01/2015	HVAC REPLACEMENT PROJECT	705967		JLW
1	01/12/2000	AS-BUILT PER CONTRACTOR MARK-UP			AR

DEPARTMENT OF TRANSPORTATION
FEDERAL AVIATION ADMINISTRATION

ATO - TECHNICAL OPERATIONS **CENTRAL SERVICE AREA**

ATCT
HVAC FLOOR PLANS

LITTLE ROCK BILL & HILLARY CLINTON NATL ARPT/ADAMS FIELD AR

REVIEWED BY	SUBMITTED BY	APPROVED BY
	ERBEY FERNANDEZ	*JOHNNIE L.WHITE*
	PROGRAM IMPLEMENTATION ENGR.	SUPERVISOR OF SECTION, ASW-457

DESIGNED DP
DRAWN JM
CHECKED ME

ISSUED BY: ENGINEERING SERVICES INFRASTRUCTURE

DATE 07/07/1997 JCN

DRAWING NO LIT-ATCT-M11 REV D

ISSUED FOR: AS-BUILT

EDMS: LIT-ATCT-M11.DGN

LIT-ATCT-M11.DGN 2/22/2018 3:17:11 PM Paul.CTR O'Donnell

THIS DRAWING PRODUCED ON ASW REGION MICROSTATION SYSTEM

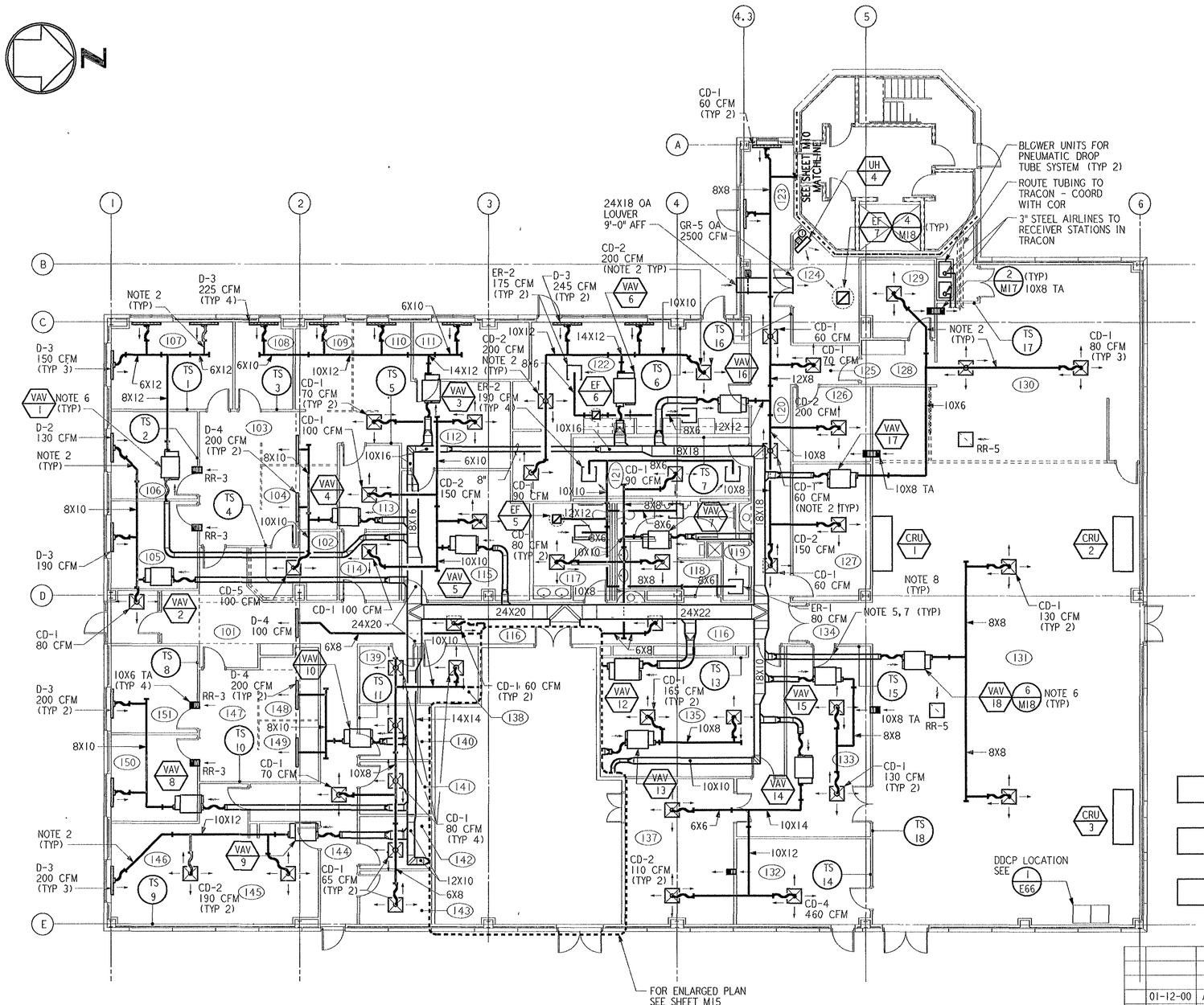

BASE BUILDING FLOOR PLAN

1/8" = 1'-0"

ROOM SCHEDULE	
NO.	NAME
100	VESTIBULE
101	LOBBY
102	SECRETARY/RECEPTIONIST
103	CORRIDOR
104	CLERK/TYPIST
105	FUTURE AMP
106	AATM
107	ATM
108	AO
109	TS
110	UNASSIGNED
111	PPS
112	FILE ROOM
113	QAS
114	PLAYBACK
115	AT/AF ADMIN STORAGE
116	CORRIDOR
117	WOMEN'S
118	MEN'S
119	JANITOR'S CLOSET
120	CORRIDOR
121	LOCKER ROOM
122	KITCHEN/BREAK ROOM
123	LINK
124	PUMP ROOM
125	CORRIDOR
126	TTGOR/TSART
127	AUS
128	VESTIBULE
129	SUPERVISORS OFFICE
130	TRACON ROOM
131	ELECTRONIC EQUIPMENT ROOM
132	TELCO ROOM
133	REPAIR ROOM
134	VESTIBULE
135	AF TECHNICIANS
136	ELECTRICAL/MECHANICAL ROOM
137	MATERIAL STORAGE
138	EMPLOYEE RELATIONS
139	EMPLOYEE RELATIONS
140	LIBRARY
141	RMM/LIS/MMS
142	COMPUTER STORAGE
143	CBI TRAINING
144	CORRIDOR
145	TRAINING
146	CONFERENCE
147	AF RECEPTION
148	SECRETARY
149	SECRETARY
150	AF MGR
151	AF MGR

NOTES:

1. FOR GENERAL NOTES, SEE DRAWING M01.
2. ALL DUCTWORK CONNECTIONS TO NEW DIFFUSERS SHALL MATCH THE NECK SIZE LISTED IN THE AIR DEVICE SCHEDULE.
3. COORDINATE ELEVATION OF PIPING OR DUCTWORK TO AVOID CABLE TRAY INSTALLATION.
4. ALL BRANCH DUCTWORK CONNECTING TO AN AIR DEVICE SHALL BE PROVIDED WITH VOLUME DAMPER AT TAKEOFF. ALL DAMPERS SHALL BE INSTALLED PER SMACNA DUCT CONSTRUCTION STANDARDS.
5. PROVIDE RECTANGULAR TAKEOFF FROM PRIMARY DUCT SIZED AS SHOWN IN THE TERMINAL SCHEDULE ON DRAWING M01. CONTINUE PRIMARY DUCT RUN-OUT WITH RECTANGULAR TO ROUND TRANSITION SIZE TO MATCH TERMINAL INLET DIAMETER.
6. TERMINAL SUPPLY CFM (DAMPER AND FAN) SHALL BE BALANCED TO MATCH THE SUM OF CONNECTED DIFFUSER CFM AS SHOWN.
7. ALL PRIMARY SUPPLY AIR DUCTWORK UPSTREAM FROM TERMINAL UNIT SHALL BE MEDIUM PRESSURE CONSTRUCTION.
8. ALL SECONDARY SUPPLY AIR DUCTWORK DOWNSTREAM FROM TERMINAL UNIT SHALL BE LOW PRESSURE CONSTRUCTION.
9. ALL RETURN AIR SHALL BE THROUGH LIGHT FIXTURES UNLESS OTHERWISE NOTED. ALL WORK IN THE CEILING SPACE SHALL CONFORM TO CODE FOR A RETURN AIR PLENUM.
10. ALL WORK IN THE RAISED FLOOR SPACE SHALL CONFORM TO CODE FOR A SUPPLY AIR PLENUM. PROVIDE (20) PERFORATED FLOOR TILES FOR SUPPLY AIR DELIVERY.
11. PRIMARY AIR DAMPER SHALL BE FIXED TO MAXIMUM SUPPLY SETTING TO MAINTAIN OUTSIDE AIR VENTILATION REQUIREMENTS.
12. TEMPERATURE SENSOR IDENTIFICATION NUMBER CORRESPONDS TO RESPECTIVE VAV TERMINAL UNIT NUMBER.

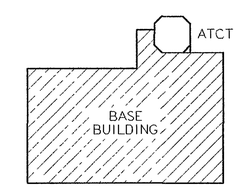

KEY PLAN

ESU

M12

REV.	DATE	DESCRIPTION	DFTG.	CHECKED
	01-12-00	AS-BUILT PER CONTRACTOR MARK-UP	EP	AR

THE ORIGINAL WAS SIGNED AND SEALED BY DAVID M. PFUNDT AR #8368 ANY ALTERRATION WITHOUT CONSENT OF DAVID M. PFUNDT IS IN VIOLATION OF STATE LAW. THE ORIGINAL IS ON FILE WITH THE FEDERAL AVIATION ADMINISTRATION SOUTHWEST REGION, FT. WORTH, TEXAS

PARSONS

DALLAS, TX

DEPARTMENT OF TRANSPORTATION
FEDERAL AVIATION ADMINISTRATION
SOUTHWEST REGION — FORT WORTH, TEXAS

INTERMEDIATE ACTIVITY LEVEL
AIRPORT TRAFFIC CONTROL TOWER

HVAC
FLOOR PLANS
BASE BUILDING

LITTLE ROCK (LITTLE ROCK NATIONAL AIRPORT/ADAMS FIELD) ARKANSAS

SUBMITTED: ERBEY FERNANDEZ — PROGRAM IMPLEMENTATION ENGINEER
APPROVED: JOHNNIE L. WHITE — SUPERVISOR OF SECTION, ASW-457

DESIGNED: D. PFUNDT
REVIEWED: M. ELKAN
ORIG. DFT.: J. MILLER
FACILITY:

ISSUED BY AIRWAY FACILITIES DIVISION

DATE: 7-7-97
DRAWING NUMBER: LIT-ATCT-M12-01

REF. DWG.:

FILENAME:

Tue Jan 26 14:20:05 1999 T36DT J:\PARSONS\QUEUES\T36DT\MU012B.PRF

ROOM SCHEDULE	
NO.	NAME
101	WORK ROOM
102	VESTIBULE
103	ENGINE GENERATOR
104	UPS
105	SHOWER
106	TECHNICIANS

NOTES:

1. FOR GENERAL NOTES, SEE DRAWING M01.
2. FUEL OIL AND JACKET WATER PIPING SHOWN IS SCHEMATIC ONLY. CONTRACTOR SHALL INSTALL PIPING FROM FUEL STORAGE TANK AND REMOTE RADIATOR TO THE ENGINE GENERATOR. COORDINATE WITH GFM.
3. REFERENCE FAA STANDARD DRAWING, FUEL STORAGE TANK INSTALLATION DETAILS.
4. ROUTE REFRIGERANT, FUEL OIL SUPPLY/RETURN, AND JACKET WATER PIPING ALONG SIDEWALK.
5. ROUTE CONDENSATE DRAINS FROM FROM CC-1 AND CC-2 TO NEAREST FLOOR SINK.
6. PROVIDE AIR COMPRESSOR SUITABLE FOR A SMALL SHOP, GARAGE, AND WORKBENCH APPLICATION. PROVIDE OIL-LESS PUMP AND DIRECT DRIVE MOTOR (115V, 15 AMP). AIR COMPRESSOR SHALL BE A TANK MOUNTED MODEL WITH 15 FOOT AIR HOSE, 6 FOOT POWER CORD, AND DUAL GAUGE REGULATOR. AIR COMPRESSOR SHALL INCLUDE AS A MINIMUM 3/4 HP MOTOR, 7.5 GALLON TANK, AND 100 PSI RATING. LOCATE IN THE ESU BUILDING WORKSHOP AREA.

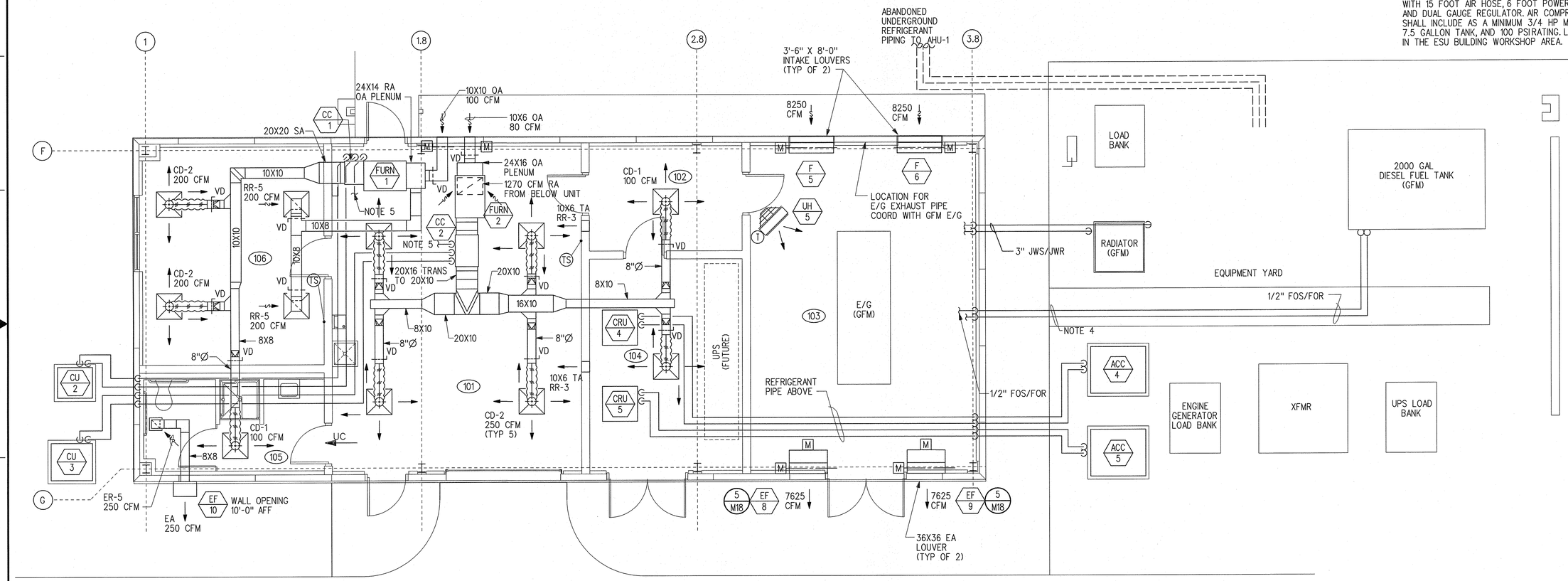

ESU BUILDING
SCALE: 1/4" = 1'-0"

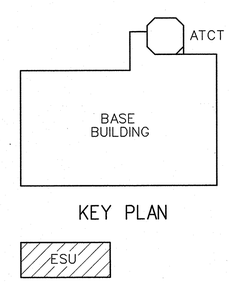

KEY PLAN

4' 0 4' 8'
SCALE: 1/4" = 1'-0"

REV	APPROVED DATE	DESCRIPTION	JCN	REDLINE DATE	APVD
C	10/12/2017	AS-BUILT (T. CLAYTON).	1100154	10/12/2017	TC
B	04/01/2015	HVAC REPLACEMENT PROJECT	705967		JLW
1	01/12/2000	AS-BUILT PER CONTRACTOR MARK-UP			AR

DEPARTMENT OF TRANSPORTATION
FEDERAL AVIATION ADMINISTRATION
ATO - TECHNICAL OPERATIONS CENTRAL SERVICE AREA

ATCT
HVAC FLOOR PLANS ESU BUILDING

LITTLE ROCK BILL & HILLARY CLINTON NATL ARPT/ADAMS FIELD AR

REVIEWED BY
SUBMITTED BY: ERBEY FERNANDEZ, PROGRAM IMPLEMENTATION ENGR.
APPROVED BY: JOHNNIE L. WHITE, SUPERVISOR OF SECTION, ASW-457
DESIGNED DP
DRAWN JM
CHECKED ME
ISSUED BY: ENGINEERING SERVICES INFRASTRUCTURE
DATE 07/07/1997 JCN
DRAWING NO LIT-ATCT-M14 REV C

ISSUED FOR: AS-BUILT

LIT-ATCT-M14.DGN 10/26/2017 4:15:39 PM Paul CTR O'Donnell
EDW: LIT-ATCT-M14.DGN

THIS DRAWING PRODUCED ON ASW REGION MICROSTATION SYSTEM

NOTE:

1. FOR GENERAL NOTES, SEE DRAWING M01.

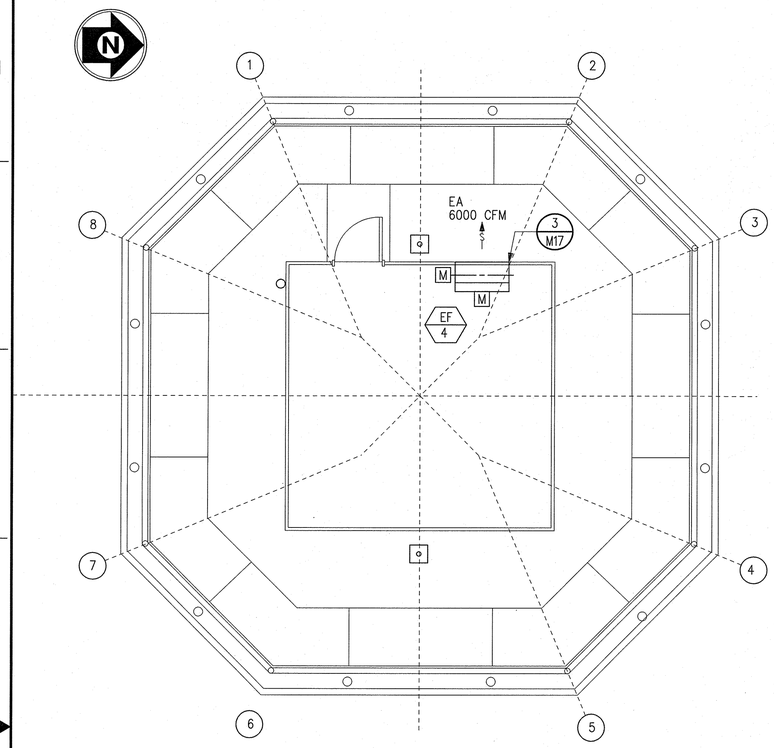

PENTHOUSE FLOOR PLAN
SCALE: 1/4" = 1'-0"

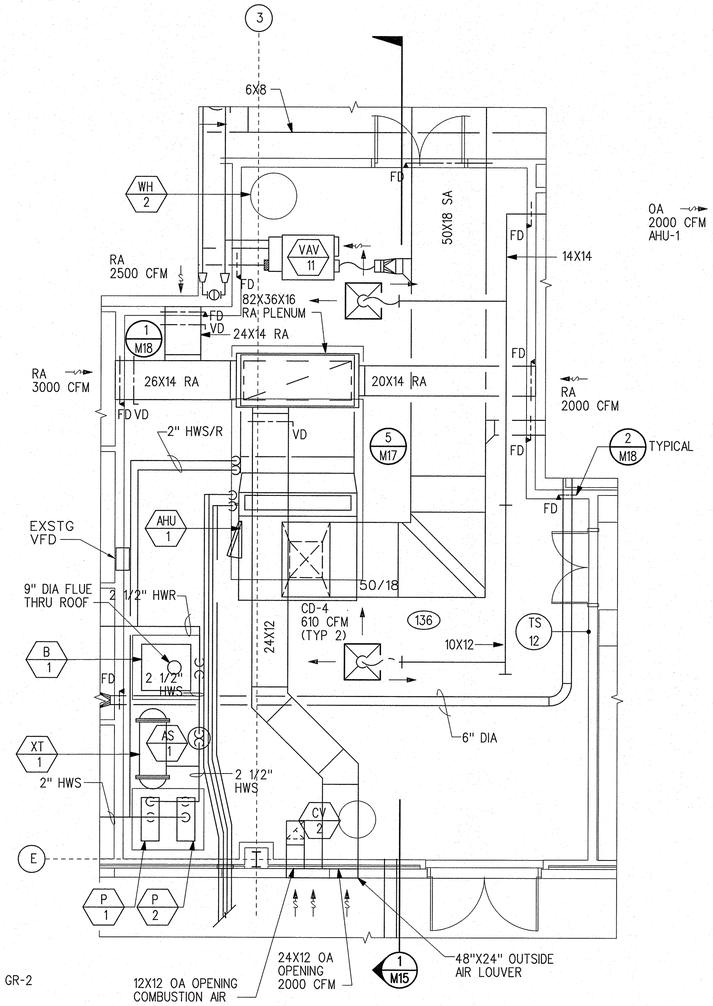

ENLARGED MECHANICAL ROOM PLAN
SCALE: 1/4" = 1'-0"

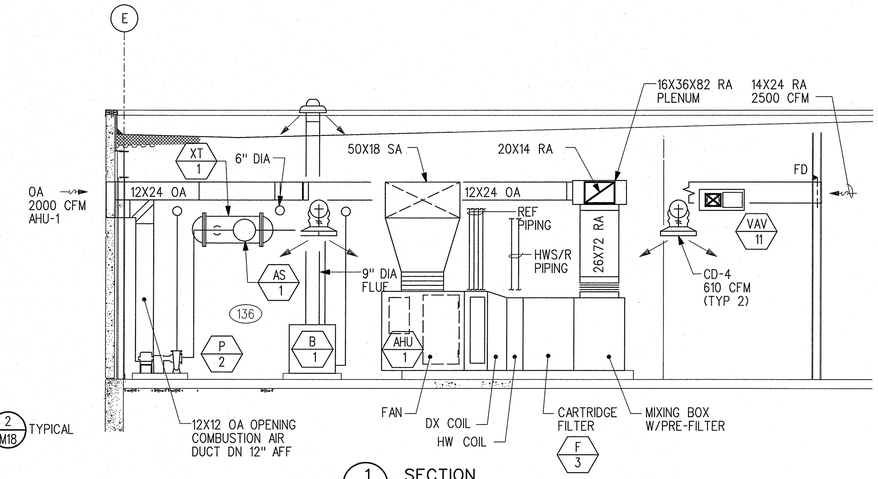

1 M15 SECTION
SCALE: 1/4" = 1'-0"

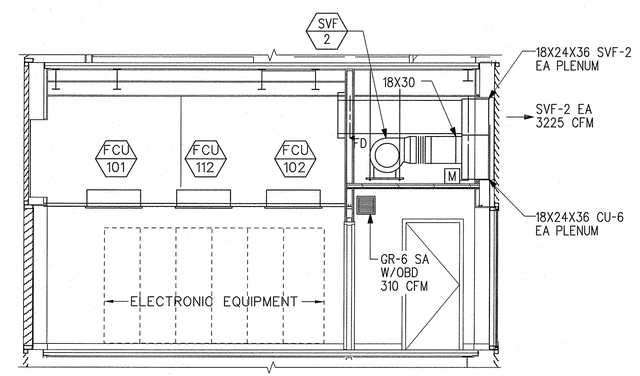

REF 4 M15 SECTION
M10
SCALE: 1/4" = 1'-0"

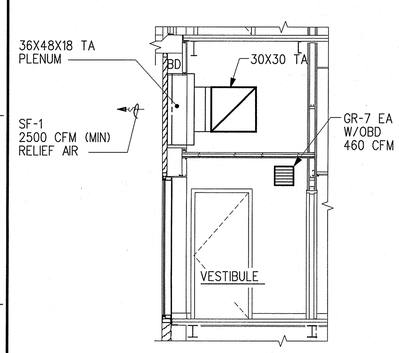

REF 2 M15 SECTION
M11
SCALE: 1/4" = 1'-0"

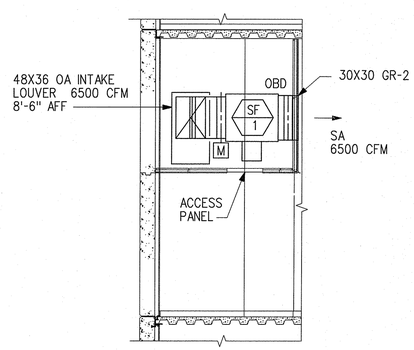

REF 3 M15 SECTION
M10
SCALE: 1/4" = 1'-0"

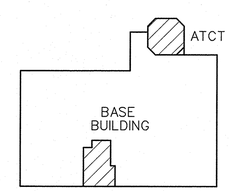

KEY PLAN

ESU

4' 0 4' 8'
SCALE: 1/4" = 1'-0"

REV	APPROVED DATE	DESCRIPTION	JCN	REDLINE DATE	APVD
C	10/12/2017	AS-BUILT (T. CLAYTON).	1100154	10/12/2017	TC
B	04/01/2015	HVAC REPLACEMENT PROJECT	705967		JLW
1	01/12/2000	AS-BUILT PER CONTRACTOR MARK-UP			AR

DEPARTMENT OF TRANSPORTATION
FEDERAL AVIATION ADMINISTRATION
ATO - TECHNICAL OPERATIONS CENTRAL SERVICE AREA

ATCT
HVAC FLOOR PLANS & SECTIONS

LITTLE ROCK BILL & HILLARY CLINTON NATL ARPT/ADAMS FIELD AR

REVIEWED BY	SUBMITTED BY	APPROVED BY
	ERBEY FERNANDEZ	JOHNNIE L.WHITE
	PROGRAM IMPLEMENTATION ENGR.	SUPERVISOR OF SECTION, ASW-457

DESIGNED DP
DRAWN JM
CHECKED ME
ISSUED BY ENGINEERING SERVICES INFRASTRUCTURE
DATE 07/07/1997 JCN
DRAWING NO LIT-ATCT-M15 REV C

ISSUED FOR: AS-BUILT

LIT-ATCT-M15.DGN
10/20/2017 4:15:56 PM Paul CTR O'Donnell

EDM: LIT-ATCT-M15.DGN

THIS DRAWING PRODUCED ON ASW REGION MICROSTATION SYSTEM

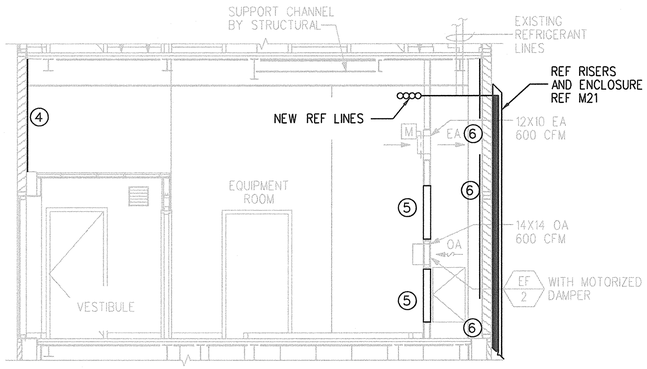

REF M11 (1) M16 SECTION
SCALE: 1/4" = 1'-0"

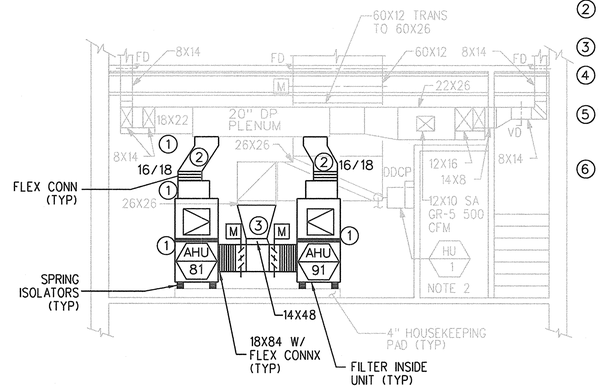

REF D011 (2) M16 SECTION
SCALE: 1/4" = 1'-0"

KEY NOTES: SECTION 2/M16

1. INSTALL NEW AHU-81,91. **NOTE**: ONE UNIT MUST REMAIN IN OPERATION AT ALL TIMES.
2. 16/18 S/A DUCT, OFFSET TO EXISTING PLENUM AS REQUIRED AND MAKE NEW CONNECTIONS.
3. INSTALL NEW TRANSITION.
4. DISCONNECT DUCT FROM BACK OF LOUVER AND BLANK-OFF LOUVER WITH SHEETMETAL AND SEAL JOINT.
5. WHERE DUCT HAS BEEN REMOVED, PATCH WALL PENETRATIONS WITH SIMILAR DRYWALL MATERIAL AS EXISTING.
6. BLANK OFF EXISTING LOUVERS. LEAVE (2) OPENINGS APPROXIMATELY 36"x24", ONE ON UPPER LOUVER AND ONE ON LOWER LOUVER.

NOTES:

1. FOR GENERAL NOTES, SEE DRAWING M01.
2. WALL MOUNT HUMIDIFIER RESERVOIR. ROUTE 3/4" DRAIN LINE TO NEAREST FLOOR DRAIN. REFERENCE DRAWING P03.

GENERAL NOTES:

1. REFERENCE SHEET M19 FOR GENERAL NOTES THAT ARE APPLICABLE TO ALL SHEETS.

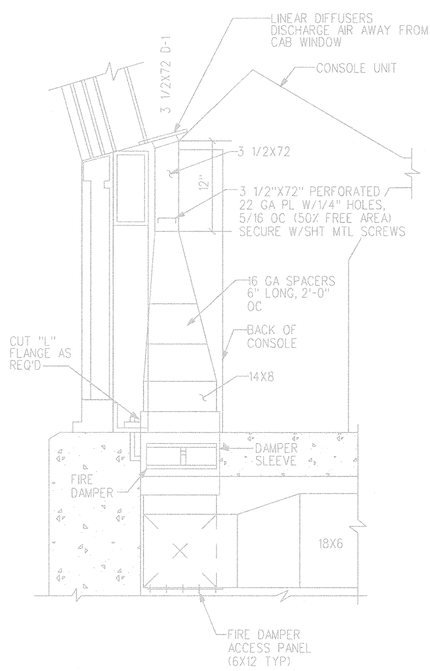

REF M11 (3) M16 SECTION
SCALE: 1 1/2" = 1'-0"

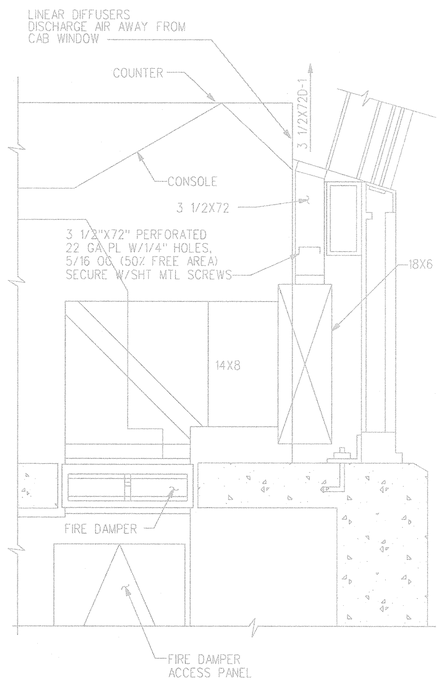

REF M11 (4) M16 SECTION
SCALE: 1 1/2" = 1'-0"

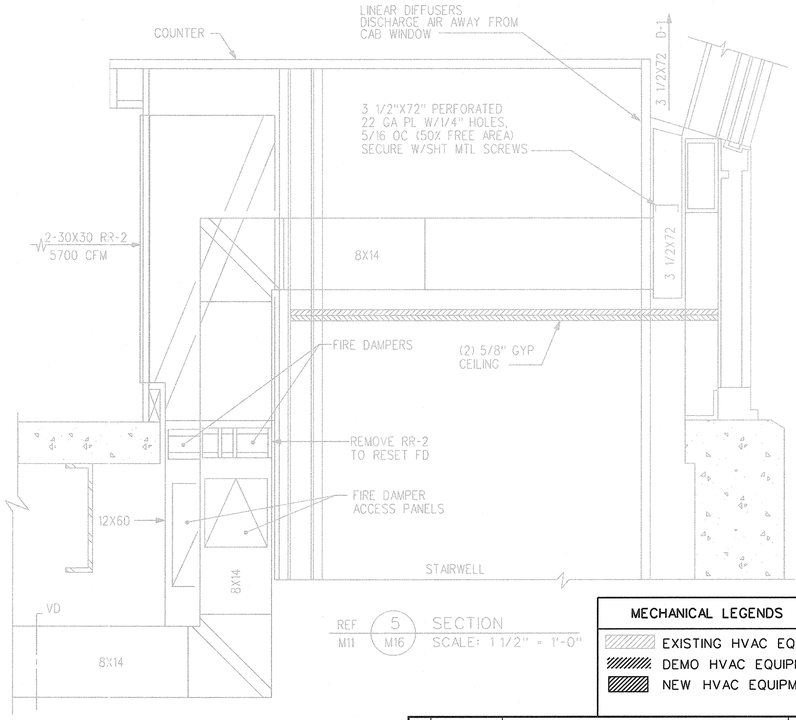

REF M11 (5) M16 SECTION
SCALE: 1 1/2" = 1'-0"

1' 9" 6" 3" 0 1'
SCALE: 1 1/2" = 1'-0"

4' 0 4' 8'
SCALE: 1/4" = 1'-0"

MECHANICAL LEGENDS

- EXISTING HVAC EQUIPMENT/MATERIAL
- DEMO HVAC EQUIPMENT/MATERIAL
- NEW HVAC EQUIPMENT/MATERIAL

REV	APPROVED DATE	DESCRIPTION	JCN	REDLINE DATE	APVD
B	04/01/2015	HVAC REPLACEMENT PROJECT	705967		
1	01/12/2000	AS-BUILT PER CONTRACTOR MARK-UP			AR

DEPARTMENT OF TRANSPORTATION
FEDERAL AVIATION ADMINISTRATION
ATO - TECHNICAL OPERATIONS CENTRAL SERVICE AREA

ATCT
HVAC SECTIONS

LITTLE ROCK BILL & HILLARY CLINTON NATL ARPT/ADAMS FIELD AR

REVIEWED BY	SUBMITTED BY	APPROVED BY
	ERBEY FERNANDEZ	JOHNNIE L. WHITE
	PROGRAM IMPLEMENTATION ENGINEER	SUPERVISOR OF SECTION, ASW-457

DESIGNED	DP	ISSUED BY: ENGINEERING SERVICES INFRASTRUCTURE	DATE 07/07/1997 JCN
DRAWN	JM		DRAWING NO LIT-ATCT-M16 REV B
CHECKED	ME		

ISSUED FOR:

LIT-ATCT-M16.DGN 4/22/2015 10:19:52 AM Andrew Schumacher

EDMS LIT-ATCT-M16.DGN

THIS DRAWING PRODUCED ON ASW REGION MICROSTATION SYSTEM

FAN COIL UNIT SCHEDULE (VRF SYSTEM)

MARK	LOCATION	SERVICE	GROSS COOLING CAP.(BTUH)	SENSIBLE COOLING CAP.(BTUH)	EAT (DB/WB) °F	HEATPUMP HEATING CAP(BTUH)	OUTSIDE AIR (CFM)	BLOWER FAN DATA					REFRIGERANT TYPE	MANUFACTURER/ MODEL	REMARKS
								TOTAL CFM	E.S.P. IN. W.C.	ELEC FLA	MOTOR SPEED RPM	VOLTS/ PHASE/ HZ			
FCU-101,102	L3 INT LVL CLG	EQ RM	31,300	22,400	75/62	18,000	0	840	--	0.5	---	208/1/60	R-410A	TOSHIBA MMU-AP036	1 3
FCU-111,112	L3 INT LVL CLG	EQ RM	31,300	22,400	75/62	18,000	0	840	--	0.5	---	208/1/60	R-410A	TOSHIBA MMU-AP036	1 4
FCU-121	ROOF ACCESS LEVEL	EL RM	29,000	25,000	75/62	15,000	0	880	--	1.04	---	208/1/60	R-410A	TOSHIBA RAV-SP420CT-UL	1 2
FCU-122,123															
FCU-131	SUB-JUNCTION LEVEL	7TH FLOOR BREAK RM		19,000		18,000	0	600				208/1/60	R-410A	TOSHIBA RAV-SP180UT-UL	2 3

1. PROVIDED CONDENSATE PUMP, 4-WAY CASSETTE PANEL, WIRED REMOTE CONTROLLER, AND REFRIGERANT BALL VALVES.
2. INDOOR UNIT IS POWERED FROM OUTDOOR UNIT.
3. INSTALLED ESSENTIAL POWER.
4. INSTALLED ESSENTIAL POWER, STANDBY.

AIR HANDLING UNIT SCHEDULE

MARK	LOCATION	SERVES	TOTAL CFM	OA CFM	FAN			DX COOLING COIL								ELECTRIC HEAT (KW)	SINGLE POINT ELEC CONN					MANUFACTURER AND MODEL	REMARKS
					ESP	HP	RPM	TOTAL MBH	SENS MBH	EAT DB	EAT WB	LAT DB	LAT WB	MIN ROWS	MAX PD"		VOLT	PH	HZ	MCA	MOP		
AHU-81	JUNCTION LEVEL	CAB	4200	300	1.8	5	1045	134	113	76.0	62.0	49.7	49.7	4	0.80	30.0	460	3	60	49.4	50.0	CARRIER 40RUA014	1 2 4
AHU-91	JUNCTION LEVEL	CAB	4200	300	1.8	5	1045	134	113	76.0	62.0	49.7	49.7	4	0.80	30.0	460	3	60	49.4	50.0	CARRIER 40RUA014	1 3 4

1. 1ST STAGE HEAT AT 18.4 KW, 2ND STAGE AT 9.2 KW.
2. INSTALLLED ESSENTIAL POWER.
3. INSTALLED ESSENTIAL POWER, STANDBY.
4. DUAL CIRCUIT COOLING COIL.

AIR COOLED CONDENSING UNIT SCHEDULE

MARK	LOCATION	SERVES	GROSS COOLING CAP.(BTUH)	AMBIENT TEMP °F	GROSS HEATING CAP.(BTUH)	WINTER AMBIENT TEMP °F	REF TYPE	LIQUID LINE	SUCTION LINE	ELECTRICAL DATA			MANUFACTURER/ MODEL	REMARKS
										VOLTS/ PHASE/ HERTZ	MCA	MOP		
CU-8	GND LVL	AHU-81	135,000	100° F	-	0° F	R-410A	(2)1/2"	(2)1-1/8"	460/3/60	25.5	30.0	CARRIER 38AUD014	2 4
CU-9	GND LVL	AHU-91	135,000	100° F	-	0° F	R-410A	(2)1/2"	(2)1-1/8"	460/3/60	25.5	30.0	CARRIER 38AUD014	3 4
CU-10	GND LVL	FCU-101,102	60,000	100° F	36,000	0° F	R-410A	1/2"	7/8"	460/3/60	18.0	20.0	TOSHIBA MMY-MAP072	1 2
CU-11	GND LVL	FCU-111,112	60,000	100° F	36,000	0° F	R-410A	1/2"	7/8"	460/3/60	18.0	20.0	TOSHIBA MMY-MAP072	1 3
CU-12	GND LVL	FCU-121	29,000	100° F	15,000	0° F	R-410A	3/8"	5/8"	208/1/60	24.0	40.0	TOSHIBA RAV-SP420AT2-UL	1
CU-12		FCU-122												
CU-12		FCU-123												

1. FOR THE HEAT PUMP AND VRF SYSTEM. PROVIDED 1/2" INSULATION ON RL AND RS LINES.
2. INSTALLED ESSENTIAL POWER.
3. INSTALLED ESSENTIAL POWER, STANDBY.
4. PROVIDED 1/2" INSULATION ON RS LINES.

TEST AND BALANCE

PROVIDED TEST AND BALANCE OPERATIONS FOR ALL SYSTEMS ON THIS PAGE AS WELL AS FAN AND COIL SECTION OF AHU-1 AND CU-1A, 1B.

REV	APPROVED DATE	DESCRIPTION	JCN	REDLINE DATE	APVD
C	04/02/2018	AS-BUILT (A. SCHUMACHER)	1100015	04/02/2018	AS
B	01/26/2018	AS-BUILT (T. CLAYTON).	1100015	01/17/2018	TC
A	10/12/2017	AS-BUILT (T. CLAYTON).	1100015	10/12/2017	TC

DEPARTMENT OF TRANSPORTATION
FEDERAL AVIATION ADMINISTRATION
ATO - TECHNICAL OPERATIONS CENTRAL SERVICE AREA

ATCT
HVAC REPLACEMENT PROJECT
HVAC EQUIPMENT SCHEDULES

LITTLE ROCK BILL & HILLARY CLINTON NATL ARPT/ADAMS FIELD AR

REVIEWED BY
SUBMITTED BY: MIKE DOERR, PROJECT ENGINEER
APPROVED BY: JOHNNIE L. WHITE, MGR: ENGINEERING - FORT WORTH
DESIGNED MKD
DRAWN
CHECKED
ISSUED BY: ENGINEERING SERVICES INFRASTRUCTURE
DATE 04/01/2015 JCN 705967
DRAWING NO LIT-ATCT-M19 REV C

ISSUED FOR: AS-BUILT

THIS DRAWING PRODUCED ON ASW REGION MICROSTATION SYSTEM

LIT-ATCT-M19.dgn 4/5/2018 7:00:03 AM Jacqueline CTR Guile

EDM: LIT-ATCT-M19.dgn

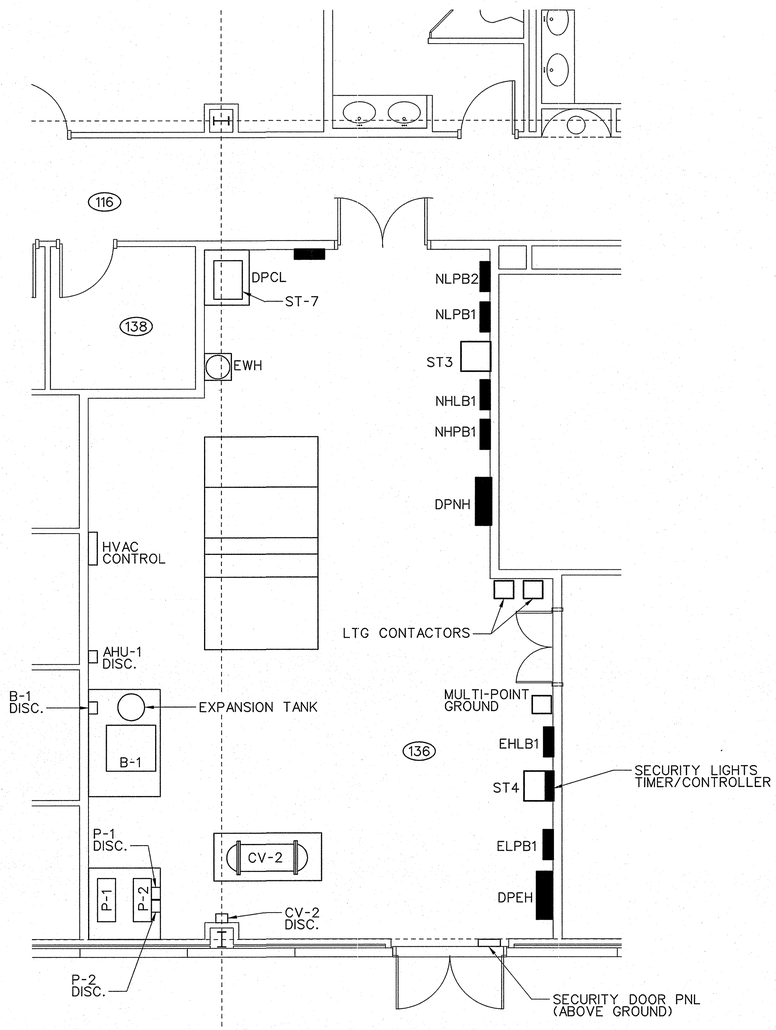

POWER PLAN

SCALE: 1/4" = 1'-0" NOTES: 1, 2, 3

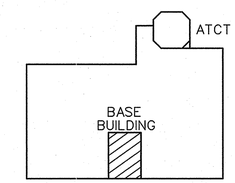

KEY PLAN

NOT TO SCALE

ESU

CONFIGURATION MANAGEMENT
FEDERAL AVIATION ADMINISTRATION
TECHNICAL OPERATIONS
INTEGRITY ★ RELIABILITY

Marilyn Tomko 5-24-2012
CM MANAGER DATE

THIS FACILITY IS UNDER CONFIGURATION CONTROL. CHANGES REQUIRE AN AUTHORIZING CCD.

ESTABLISHED PER CCD 34265

4' 0 4' 8'

SCALE: 1/4" = 1'-0"

REV	APPROVED DATE	DESCRIPTION	JCN	REDLINE DATE	APVD

DEPARTMENT OF TRANSPORTATION
FEDERAL AVIATION ADMINISTRATION
ATO - TECHNICAL OPERATIONS **CENTRAL SERVICE AREA**

ATCT

FACILITY BASELINE LAYOUT
ATCT / TRACON
ELECTRICAL/MECHANICAL ROOM

LITTLE ROCK LITTLE ROCK NATIONAL AIRPORT/ADAMS FIELD AR

REVIEWED BY	SUBMITTED BY: E.MICHELE HODGES, CM COORDINATOR	APPROVED BY: RON J.KAPLON, SSC MANAGER
DESIGNED: MH	ISSUED BY: NAS IMPLEMENTATION ANI-400	DATE: 11/14/2011 JCN
DRAWN: SLH		DRAWING NO: LIT-D-ATCT-M001-BL REV
CHECKED		

ISSUED FOR:

EDMS: lit-d-atct-m001.dgn

lit-d-atct-m001.dgn 5/24/2012 10:18:21 AM mary ctr guyton

THIS DRAWING PRODUCED ON ASW REGION MICROSTATION SYSTEM

ROOM SCHEDULE	
NO.	NAME
101	WORK ROOM
102	VESTIBULE
103	ENGINE GENERATOR
104	UPS
105	SHOWER
106	TECHNICIANS

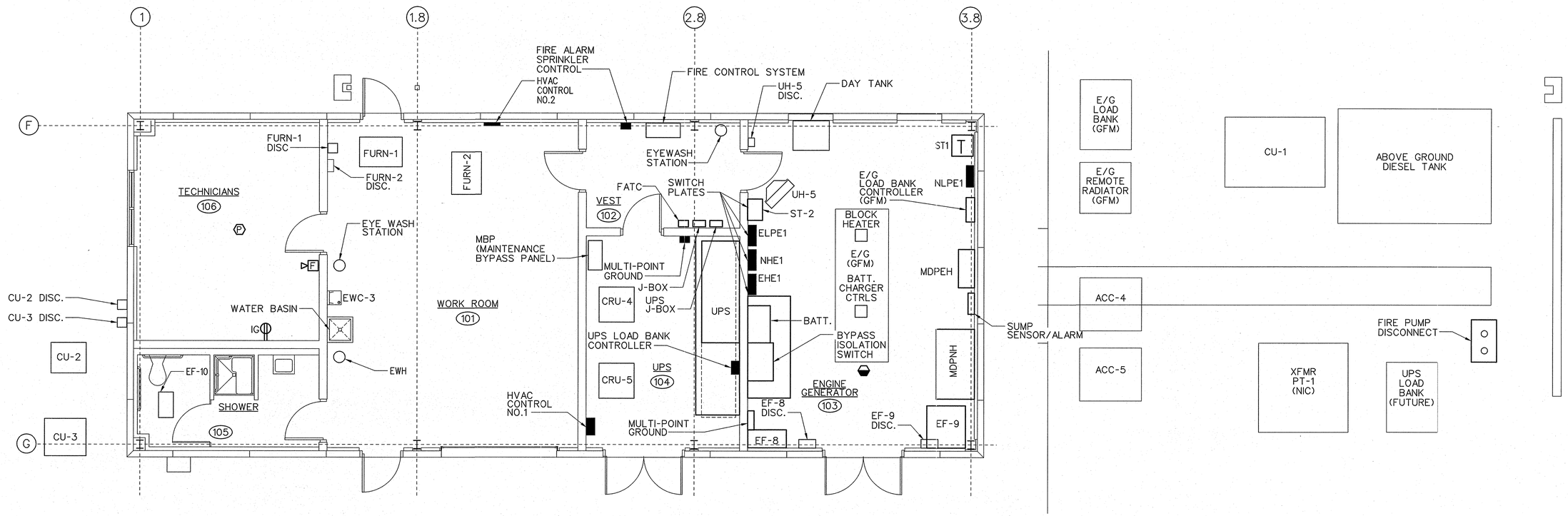

ESU BUILDING POWER PLAN
SCALE: 1/4" = 1'-0"

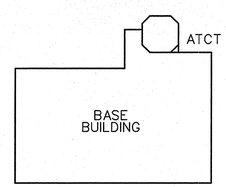

KEY PLAN
NOT TO SCALE

ESU

CM MANAGER 5-24-2012 DATE

THIS FACILITY IS UNDER CONFIGURATION CONTROL. CHANGES REQUIRE AN AUTHORIZING CCD.

ESTABLISHED PER CCD 34265

4' 0 4' 8'
SCALE: 1/4" = 1'-0"

REV	APPROVED DATE	DESCRIPTION	JCN	REDLINE DATE	APVD

DEPARTMENT OF TRANSPORTATION
FEDERAL AVIATION ADMINISTRATION
ATO - TECHNICAL OPERATIONS CENTRAL SERVICE AREA

ATCT
FACILITY BASELINE LAYOUT
ATCT / TRACON
ESU BUILDING

LITTLE ROCK LITTLE ROCK NATIONAL AIRPORT/ADAMS FIELD AR

REVIEWED BY	SUBMITTED BY	APPROVED BY
	E.MICHELE HODGES	RON J.KAPLON
	CM COORDINATOR	SSC MANAGER

DESIGNED MH
DRAWN SLH
CHECKED
ISSUED BY NAS IMPLEMENTATION ANI-400
DATE 11/14/2011 JCN
DRAWING NO LIT-D-ATCT-M002-BL REV

ISSUED FOR:

THIS DRAWING PRODUCED ON ASW REGION MICROSTATION SYSTEM

lit-d-atct-m002.dgn 5/24/2012 10:19:14 AM mary ctr ayton

EDM: lit-d-atct-m002.dgn

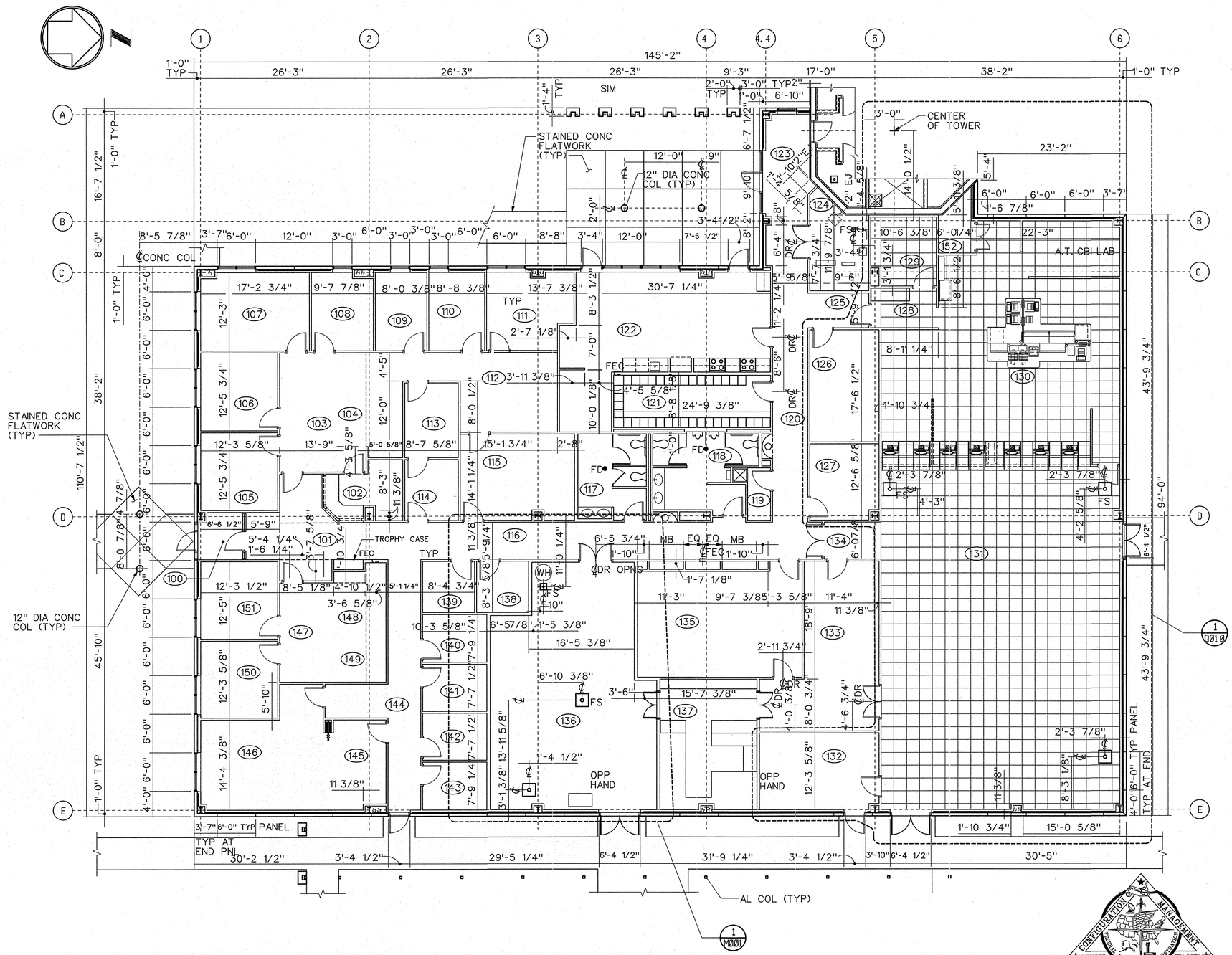

FLOOR PLAN
SCALE: 1/8" = 1'-0"

ROOM SCHEDULE

NO.	NAME
100	VESTIBULE
101	
102	ADMIN
103	A.T. RECEPTION
104	UNASSIGNED
105	ADMIN
106	A.T. OFFICE
107	A.T. MANAGER
108	A.T. TRAINING
109	A.T. OFFICE
110	STORAGE
111	PPS
112	FILE ROOM
113	NATCA
114	NATCA
115	A.T. TRAINING
116	CORRIDOR
117	WOMEN'S
118	MEN'S
119	JANITOR'S CLOSET
120	CORRIDOR
121	LOCKER ROOM
122	KITCHEN/BREAK ROOM
123	LINK
124	PUMP ROOM
125	CORRIDOR
126	ETG
127	STARS SECURITY OFFICE
128	VESTIBULE
129	SUPERVISOR'S OFFICE
130	TRACON ROOM
131	ELECTRONIC EQUIPMENT ROOM
132	TELCO ROOM
133	REPAIR ROOM
134	VESTIBULE
135	AF TECHNICIANS
136	ELECTRICAL/MECHANICAL ROOM
137	MATERIAL STORAGE
138	LAN ROOM
139	P.A.S.S.
140	CBI
141	ADMIN
142	STORAGE
143	STORAGE
144	CORRIDOR
145	TRAINING
146	CONFERENCE
147	AF RECEPTION
148	UNASSIGNED
149	UNASSIGNED
150	AF OFFICE
151	AF MGR
152	CABLE ACCESS ROOM

KEY PLAN
NOT TO SCALE

REV	APPROVED DATE	DESCRIPTION	JCN	REDLINE DATE	APVD

DEPARTMENT OF TRANSPORTATION
FEDERAL AVIATION ADMINISTRATION
ATO - TECHNICAL OPERATIONS **CENTRAL SERVICE AREA**

ATCT
FACILITY BASELINE LAYOUT
ATCT / TRACON
BASE BUILDING FLOOR PLAN

LITTLE ROCK — LITTLE ROCK NATIONAL AIRPORT/ADAMS FIELD — AR

REVIEWED BY	SUBMITTED BY	APPROVED BY
	E.MICHELE HODGES	RON J.KAPLON
	CM COORDINATOR	SSC MANAGER

DESIGNED MH — DRAWN SLH — CHECKED — ISSUED BY NAS IMPLEMENTATION ANI-400 — DATE 11/14/2011 — JCN — DRAWING NO LIT-D-ATCT-Q001-BL — REV

CM MANAGER — DATE 5-24-2012

THIS FACILITY IS UNDER CONFIGURATION CONTROL. CHANGES REQUIRE AN AUTHORIZING CCD.

ESTABLISHED PER CCD 34265

ISSUED FOR:

THIS DRAWING PRODUCED ON ASW REGION MICROSTATION SYSTEM

lit-d-atct-q001.dgn 5/24/2012 10:34:14 AM mary ctr guyton

EDM: lit-d-atct-q001.dgn

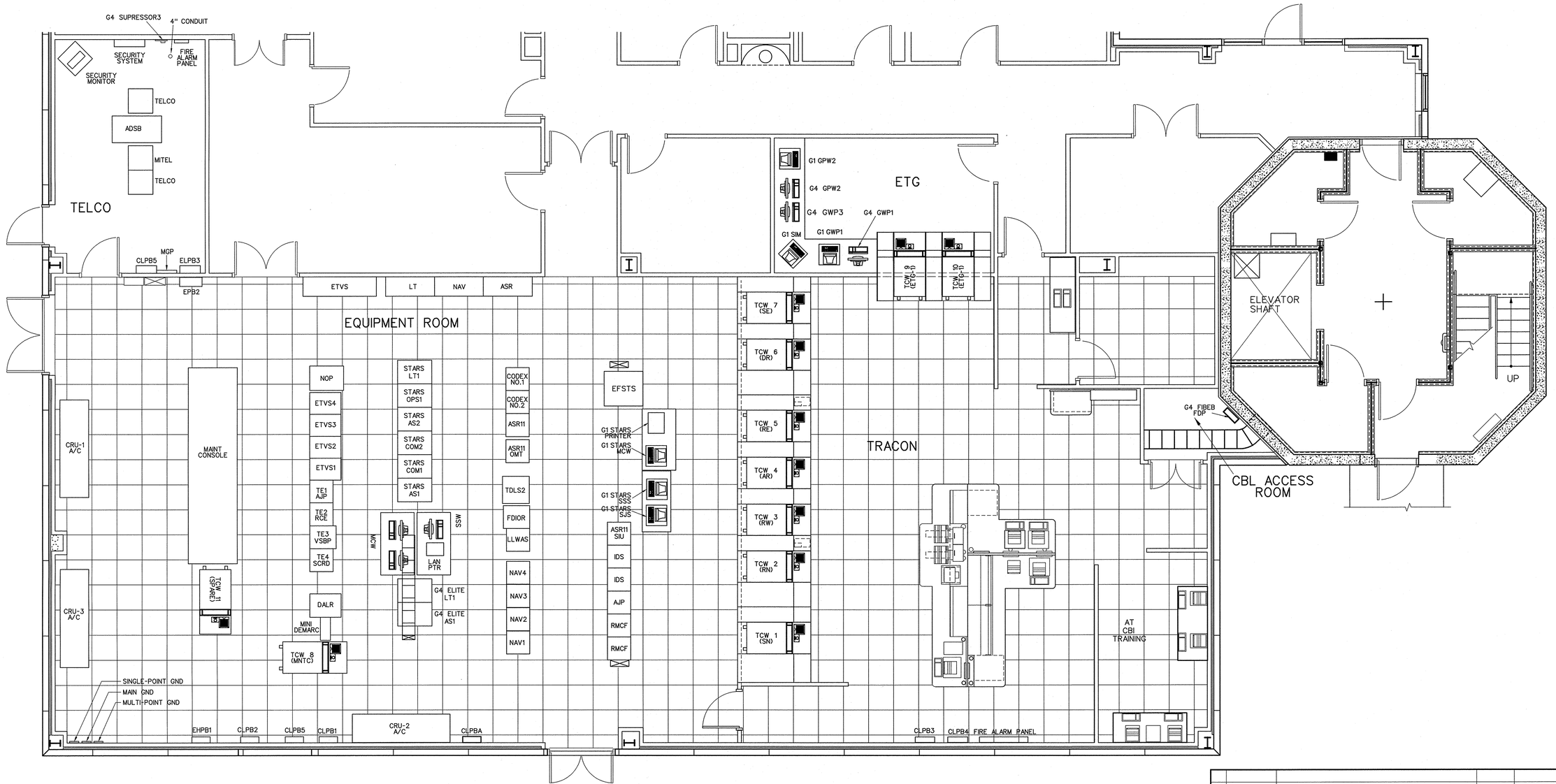

4' 0 4' 8'
SCALE: 1/4" = 1'-0"

REV	APPROVED DATE	DESCRIPTION	JCN	REDLINE DATE	APVD

DEPARTMENT OF TRANSPORTATION
FEDERAL AVIATION ADMINISTRATION
ATO - TECHNICAL OPERATIONS **CENTRAL SERVICE AREA**

ATCT

EQUIPMENT ROOM AND TRACON LAYOUT BASE BUILDING FLOOR PLAN

LITTLE ROCK BILL & HILLARY CLINTON NATL ARPT/ADAMS FIELD AR

REVIEWED BY	SUBMITTED BY	APPROVED BY
	SON T. HUA	THOMAS R. CLAYTON
	PROJECT ENGINEER	MGR: ENGINEERING - FORT WORTH

DESIGNED
DRAWN STH
CHECKED
ISSUED BY ENGINEERING SERVICES TERMINAL
DATE 12/18/2017 JCN 1300297
DRAWING NO LIT-D-ATCT-Q011 REV

ISSUED FOR: FOR INSTALLATION

lit-d-atct-q011.dgn 12/18/2017 10:07:12 AM Jacqueline CTR Gulle

EDM: lit-d-atct-q011.dgn

THIS DRAWING PRODUCED ON ASW REGION MICROSTATION SYSTEM