ROOM FINISH SCHEDULE

ROOM NUMBER	ROOM NAME	1 EXISTING CONCRETE	2	3 RUBBER BASE	4	5 5/8" GYP. BD. PAINTED	6	7	8 EXISTING CEILING TO REMAIN	9	10 NEW 2'X4' LAY-IN CLG. & GRID	11	12 OPEN TO STRUCTURE ABOVE	REMARKS	CLG. HGT.
		FLOOR		BASE	WALLS				CEILING					GENERAL NOTES:	
200A	FIRE SUSPRESSION	1			4		6			9				5/8" GYP. BD. @ NEW WALL	
200B	FIRE SUSPRESSION	1			4		6					11		5/8" GYP. BD. @ NEW WALL	
200C	STORAGE	1			4		6				10			5/8" GYP. BD. @ NEW WALL	MATCH EXIST.
300	FIRE SUSPRESSION	1			4		6			9				5/8" GYP. BD. @ NEW WALL	14'-0"
301	OFFICE	-			-		-				10				MATCH EXIST.
400	FIRE SUSPRESSION	1			-		6			9				5/8" GYP. BD. @ NEW WALL	9'-10"
401	STORAGE	1			4		6				10			5/8" GYP. BD. @ NEW WALL	MATCH EXIST.
500	FIRE SUSPRESSION	1					6			9				5/8" GYP. BD. @ NEW WALL	

DOOR AND FRAME SCHEDULE

DOOR NO.	ROOM NAME & NUMBER	DOOR TYPE	DOOR WIDTH	DOOR HEIGHT	DOOR THICK	DOOR MATL.	FRAME TYPE	FRAME MATL.	DETAILS HEAD	DETAILS JAMB	DETAILS SILL	REMARKS:
200	FIRE SUSPRESSION ROOM	C	4'-0"	7'-0"	1 3/4"	HM	3	HM	5A	5B		90 MIN. RATED
200A	FIRE SUSPRESSION ROOM	A	3'-0"	7'-0"	1 3/4"	HM	2	HM	2A	2B		
200B	FIRE SUSPRESSION ROOM	B	PR 3'-0"	7'-0"	1 3/4"	HM	1	HM	2A	2B		
200C	HANGER 2	A	3'-0"	7'-0"	1 3/4"	HM	2	HM	2A	2B		
200D	HANGER 2	D	12'-0"	10'-0"	-	STEEL	-	-	4A	4B		90 MIN. RATED
300	FIRE SUSPRESSION ROOM	B	PR 3'-0"	7'-0"	1 3/4"	HM	1	HM	2A	2B	-	
400	FIRE SUSPRESSION ROOM	B	PR 3'-0"	7'-0"	1 3/4"	HM	1	HM	1A	1B	1C	EXTERIOR INSULATED
500	FIRE SUSPRESSION ROOM	B	PR 3'-0"	7'-0"	1 3/4"	HM	1	HM	2A	2B		

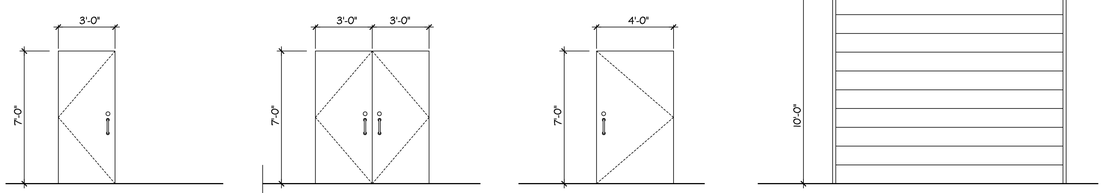

(A) FLUSH HOLLOW METAL DOOR - 16 GA - PAINT DOOR TYPE

(B) FLUSH HOLLOW METAL DOOR - 16 GA - PAINT DOOR TYPE

(C) FLUSH HOLLOW METAL DOOR - 16 GA - PAINT DOOR TYPE

(D) STEEL OVERHEAL ROLL-UP DOOR - 90 MIN. RATED

DOOR TYPE

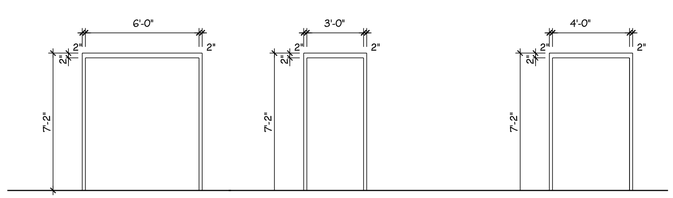

(1) HOLLOW METAL DOOR FRAME - 14 GA - PAINT

(2) HOLLOW METAL DOOR FRAME - 14 GA - PAINT

(3) HOLLOW METAL DOOR FRAME - 14 GA - PAINT

FRAME TYPE

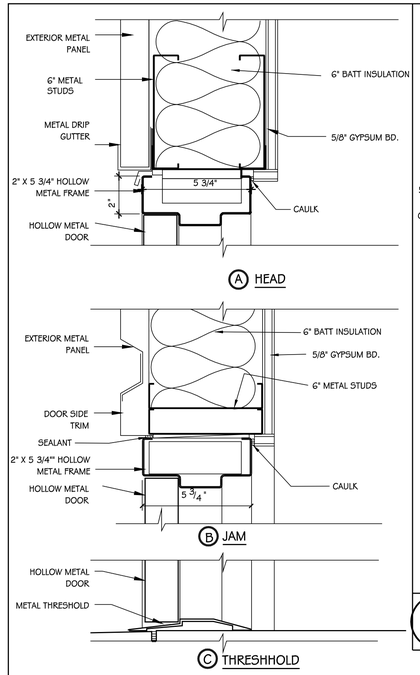

1 EXTERIOR DOOR DETAIL

SCALE: 3"=1'-0"

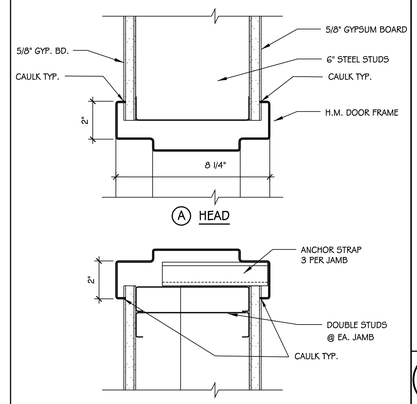

2 INTERIOR DOOR DETAILS

SCALE: 3"=1'-0"

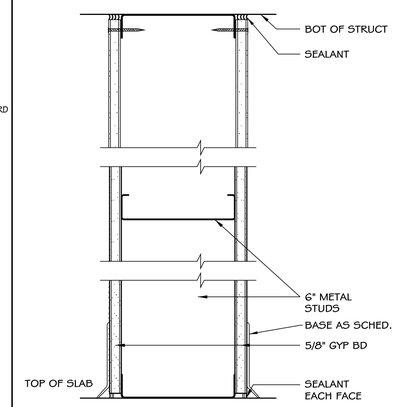

3 GYP. BOARD PARTITION

SCALE: 3" = 1'-0"

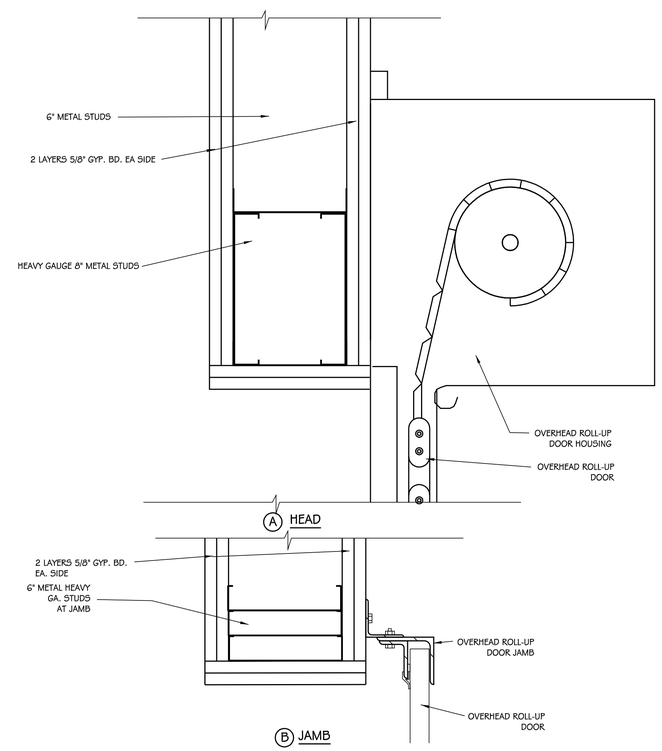

4 OVERHEAD ROLL-UP DOOR - 2 HOUR RATED - UL# U411

SCALE: 3" = 1'-0"

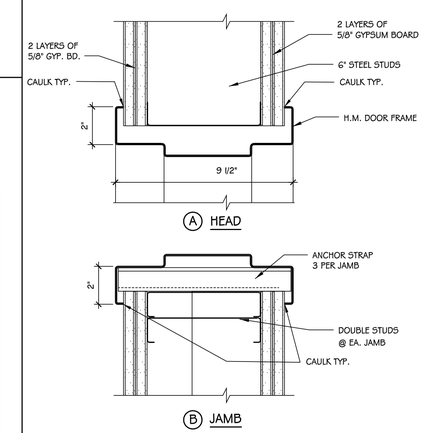

5 INTERIOR DOOR DETAILS - 2 HOUR RATED - UL U411

SCALE: 3"=1'-0"

GARVER

© 2025 GARVER, LLC
THIS DOCUMENT, ALONG WITH THE IDEAS AND DESIGNS CONVEYED HEREIN, SHALL BE CONSIDERED INSTRUMENTS OF PROFESSIONAL SERVICE AND ARE PROPERTY OF GARVER, LLC. ANY USE, REPRODUCTION, OR DISTRIBUTION OF THIS DOCUMENT, ALONG WITH THE IDEAS AND DESIGN CONTAINED HEREIN, IS PROHIBITED UNLESS AUTHORIZED IN WRITING BY GARVER, LLC OR EXPLICITLY ALLOWED IN THE GOVERNING PROFESSIONAL SERVICES AGREEMENT FOR THIS WORK.

REGISTERED ARCHITECT WITTENBERG DELONG ARKANSAS

REV	DATE	DESCRIPTION	BY

BILL AND HILLARY CLINTON NATIONAL AIRPORT
LITTLE ROCK, AR 72206

FIRE SUPPRESSION IMPROVEMENTS

STANDARD DETAILS

JOB NO.: 21A10111
DATE: MAY 2, 2025
DESIGNED BY: SM
DRAWN BY: SM

BAR IS ONE INCH ON ORIGINAL DRAWING
0 1"
IF NOT ONE INCH ON THIS SHEET, ADJUST SCALES ACCORDINGLY.

DRAWING NUMBER
AE-501