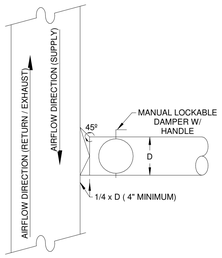

1 ROUND BRANCH DUCT CONNECTION
NOT TO SCALE

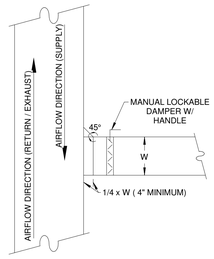

2 RECTANGULAR BRANCH DUCT CONNECTION
NOT TO SCALE

NOTE:

FLEXIBLE DUCT CONNECTIONS SHALL BE INSTALLED TO ADC STANDARDS AND SEALED TO UL STANDARDS PER AMC 603 AND 604.2.1. AS A MINIMUM, THE CONTRACTOR SHALL SECURE THE FLEXIBLE DUCT TO ENDS OF METAL DUCT WITH DRAWBANDS, AND WRAP 3" WIDE ALUMINUM TAPE EQUAL TO HARDCAST "FOIL GRIP" AROUND DRAWBAND AND EXPOSED END OF FLEXIBLE DUCT INSULATION.

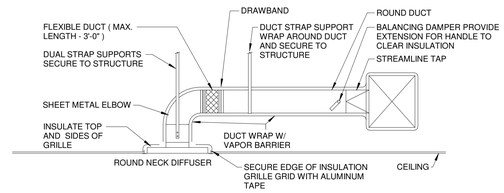

3 DIFFUSER CONNECTION TO ROUND DUCT
NOT TO SCALE

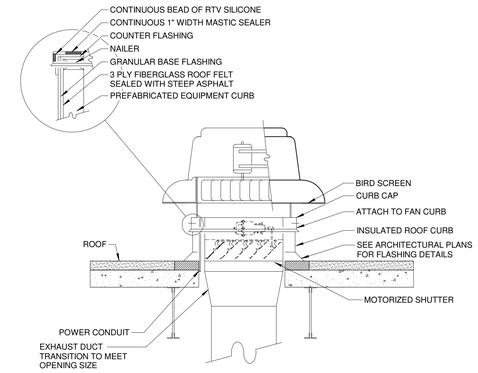

4 ROOFTOP DOWNBLAST EXHAUST FAN DETAIL
NOT TO SCALE

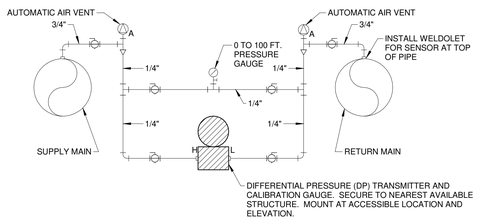

5 DIFFERENTIAL PRESSURE TRANSMITTER DETAIL
NOT TO SCALE

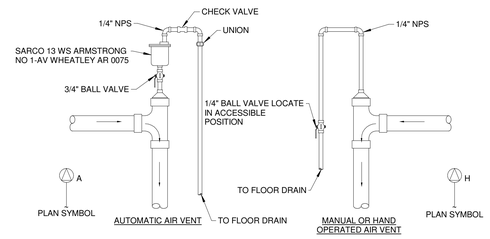

6 AIR ELIMINATOR DETAIL
NOT TO SCALE

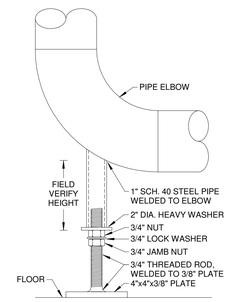

7 PIPE STAND SUPPORT
NOT TO SCALE

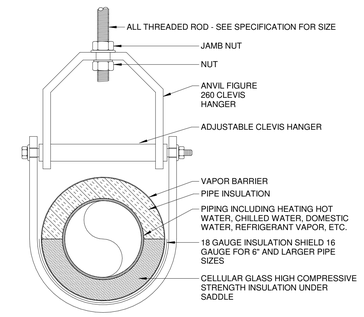

8 1 - 12 CLEVIS PIPE HANGER DETAIL
NOT TO SCALE

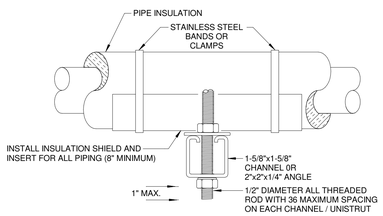

9 TRAPEZE PIPE HANGER DETAIL
NOT TO SCALE

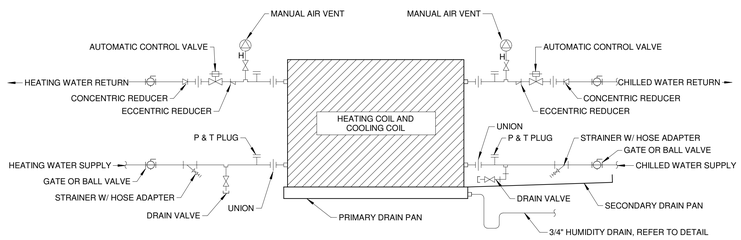

10 FAN COIL UNIT PIPING DETAIL
NOT TO SCALE

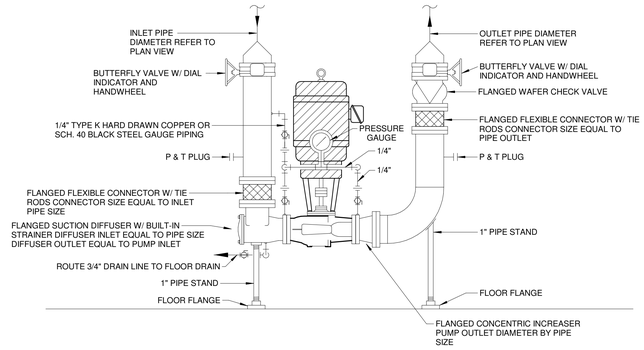

11 VERTICAL INLINE PUMP PIPING DETAIL
NOT TO SCALE

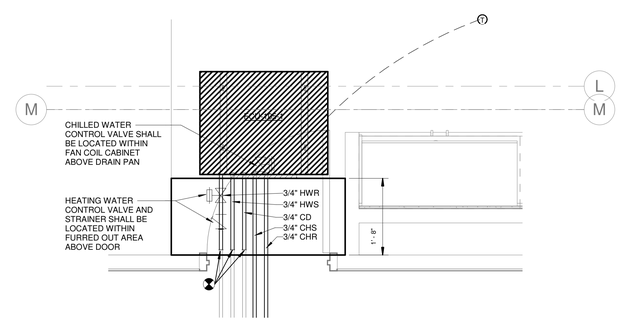

12 TYPICAL DORM ROOM FAN COIL DETAIL
NOT TO SCALE

Lead Architect:
Stocks-Mann Architects, PLC
401 W. Capitol, Suite 401
Little Rock, AR 72201
501-370-9207

Associate Architect:
Woods Group Architects
2200 Main Street
Little Rock, AR 72206
501-372-2230

Structural Engineer:
Bernhard TME
1 Allied Drive, Suite 2600
Little Rock, AR 72202
501-666-6676

MEP/Fire Protection Engineer:
Bernhard TME
1 Allied Drive, Suite 2600
Little Rock, AR 72202
501-666-6776

seal/signature

MATTHEW J. HOLMAN PROFESSIONAL ENGINEER NO. 7856

CERTIFICATE OF AUTHORIZATION Bernhard TME, LLC No. 2790 ARKANSAS

5/10/19

No.	Description	Date

UCA Housing Renovations - Phase 2 State Hall

University of Central Arkansas
Conway, Arkansas

SMA Project Number	1807
Date	05-10-2019
Phase	Construction Drawings
UCA Project Number	UCA-19-021

Contents

DETAILS - HVAC

Sheet Number

M5.1

5/9/2019 1:37:26 PM