1 AHU-1 DETAIL
N.T.S.

AIR HANDLER SECTIONS

1. AIR MIXING / FILTER SECTION, 36" SECTION LENGTH.
2. PRE-HEAT COIL IFB SECTION, 36" SECTION LENGTH.
3. ACCESS SECTION, 24" SECTION LENGTH.
4. COOLING COIL SECTION, 40" SECTION LENGTH.
5. SUPPLY FAN / DISCHARGE PLENUM SECTION, 60" TOTAL SECTION LENGTH.
6. OUTSIDE AIR CONNECTION W/ UNIT MOUNTED MOTORIZED DAMPER
7. RETURN AIR CONNECTION W/ UNIT MOUNTED MOTORIZED DAMPER
8. SUPPLY AIR CONNECTION

NOTE:
INSTALL ULTRAVIOLET (UV) LIGHT PACKAGE INSIDE UNIT INTERIOR PER EQUIPMENT MANUFACTURER'S RECOMMENDATIONS.

NOTE:
UNIT OVERALL DIMENSIONS ARE: 196" LENGTH, 72" WIDTH, AND 72" HEIGHT (HEIGHT INCLUDES BASE RAIL). SMALL ADJUSTMENTS MAY BE REQUIRED UPON FINAL SUBMITTAL REVIEW.

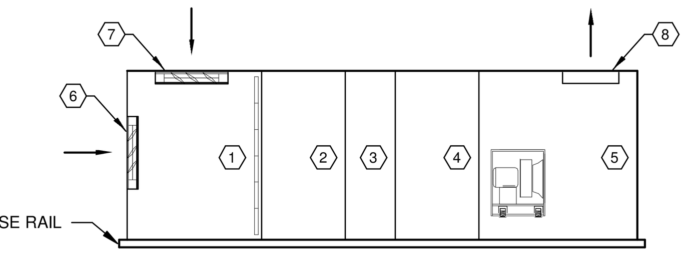

2 AHU-2 DETAIL
N.T.S.

AIR HANDLER SECTIONS

1. AIR MIXING / FILTER SECTION, 30" SECTION LENGTH.
2. PRE-HEAT COIL IFB SECTION, 36" SECTION LENGTH.
3. ACCESS SECTION, 24" SECTION LENGTH.
4. COOLING COIL SECTION, 40" SECTION LENGTH.
5. SUPPLY FAN / DISCHARGE PLENUM SECTION, 64" TOTAL SECTION LENGTH.
6. OUTSIDE AIR CONNECTION W/ UNIT MOUNTED MOTORIZED DAMPER
7. RETURN AIR CONNECTION W/ UNIT MOUNTED MOTORIZED DAMPER
8. SUPPLY AIR CONNECTION (ON OPPOSITE SIDE OF UNIT DISCHARGE PLENUM)

NOTE:
INSTALL ULTRAVIOLET (UV) LIGHT PACKAGE INSIDE UNIT INTERIOR PER EQUIPMENT MANUFACTURER'S RECOMMENDATIONS.

NOTE:
UNIT OVERALL DIMENSIONS ARE: 213.5" LENGTH, 60" WIDTH, AND 52" HEIGHT (HEIGHT INCLUDES BASE RAIL). SMALL ADJUSTMENTS MAY BE REQUIRED UPON FINAL SUBMITTAL REVIEW.

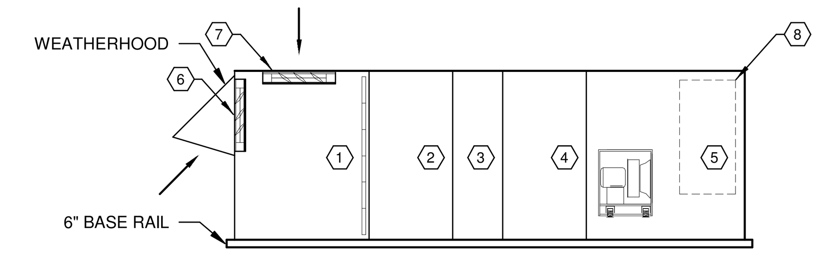

3 AHU-3 DETAIL
N.T.S.

AIR HANDLER SECTIONS

1. AIR MIXING / FILTER SECTION, 26" SECTION LENGTH.
2. PRE-HEAT COIL IFB SECTION, 36" SECTION LENGTH.
3. ACCESS SECTION, 24" SECTION LENGTH.
4. COOLING COIL SECTION, 40" SECTION LENGTH.
5. SUPPLY FAN / DISCHARGE PLENUM SECTION, 62" TOTAL SECTION LENGTH.
6. OUTSIDE AIR CONNECTION W/ UNIT MOUNTED MOTORIZED DAMPER
7. RETURN AIR CONNECTION W/ UNIT MOUNTED MOTORIZED DAMPER
8. SUPPLY AIR CONNECTION

NOTE:
INSTALL ULTRAVIOLET (UV) LIGHT PACKAGE INSIDE UNIT INTERIOR PER EQUIPMENT MANUFACTURER'S RECOMMENDATIONS.

NOTE:
UNIT OVERALL DIMENSIONS ARE: 188" LENGTH, 56" WIDTH, AND 58" HEIGHT (HEIGHT INCLUDES BASE RAIL). SMALL ADJUSTMENTS MAY BE REQUIRED UPON FINAL SUBMITTAL REVIEW.

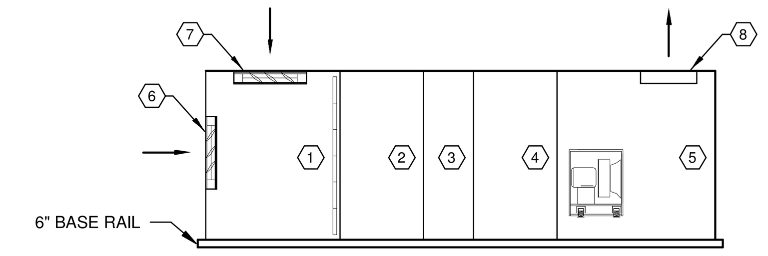

4 AHU-4 DETAIL
N.T.S.

AIR HANDLER SECTIONS

1. AIR MIXING / FILTER SECTION, 26" SECTION LENGTH.
2. PRE-HEAT COIL IFB SECTION, 36" SECTION LENGTH.
3. ACCESS SECTION, 24" SECTION LENGTH.
4. COOLING COIL SECTION, 40" SECTION LENGTH.
5. SUPPLY FAN / DISCHARGE PLENUM SECTION, 76" TOTAL SECTION LENGTH.
6. RETURN AIR CONNECTION W/ UNIT MOUNTED MOTORIZED DAMPER
7. OUTSIDE AIR CONNECTION W/ UNIT MOUNTED MOTORIZED DAMPER
8. SUPPLY AIR CONNECTION

NOTE:
INSTALL ULTRAVIOLET (UV) LIGHT PACKAGE INSIDE UNIT INTERIOR PER EQUIPMENT MANUFACTURER'S RECOMMENDATIONS.

NOTE:
UNIT OVERALL DIMENSIONS ARE: 202" LENGTH, 84" WIDTH, AND 84" HEIGHT (HEIGHT INCLUDES BASE RAIL). SMALL ADJUSTMENTS MAY BE REQUIRED UPON FINAL SUBMITTAL REVIEW.

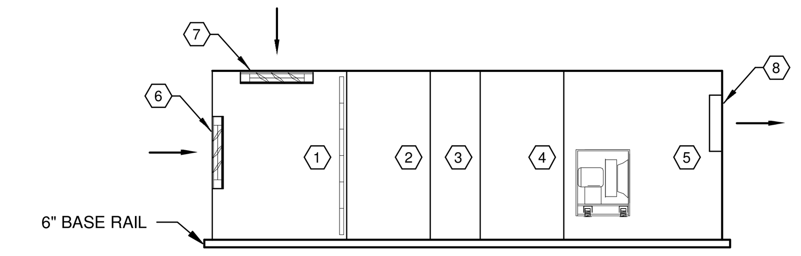

5 AHU-5 DETAIL
N.T.S.

AIR HANDLER SECTIONS

1. AIR MIXING / FILTER SECTION, 28" SECTION LENGTH.
2. PRE-HEAT COIL IFB SECTION, 36" SECTION LENGTH.
3. ACCESS SECTION, 24" SECTION LENGTH.
4. COOLING COIL SECTION, 38" SECTION LENGTH.
5. RE-HEAT SECTION, 30" SECTION LENGTH.
6. SUPPLY FAN / DISCHARGE PLENUM SECTION, 40" TOTAL SECTION LENGTH.
7. RETURN AIR CONNECTION W/ UNIT MOUNTED MOTORIZED DAMPER
8. OUTSIDE AIR CONNECTION W/ UNIT MOUNTED MOTORIZED DAMPER
9. SUPPLY AIR CONNECTION

NOTE:
INSTALL ULTRAVIOLET (UV) LIGHT PACKAGE INSIDE UNIT INTERIOR PER EQUIPMENT MANUFACTURER'S RECOMMENDATIONS.

NOTE:
UNIT OVERALL DIMENSIONS ARE: 196" LENGTH, 58" WIDTH, AND 58" HEIGHT (HEIGHT INCLUDES BASE RAIL). SMALL ADJUSTMENTS MAY BE REQUIRED UPON FINAL SUBMITTAL REVIEW.

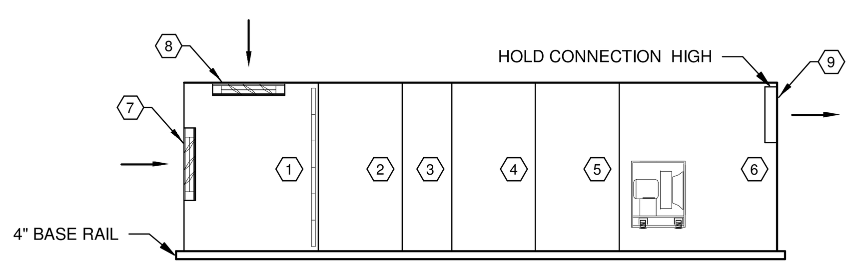

6 AHU-6 DETAIL
N.T.S.

AIR HANDLER SECTIONS

1. AIR MIXING / FILTER SECTION, 20" SECTION LENGTH.
2. PRE-HEAT COIL IFB SECTION, 36" SECTION LENGTH.
3. ACCESS SECTION, 24" SECTION LENGTH.
4. COOLING COIL SECTION, 38" SECTION LENGTH.
5. RE-HEAT SECTION, 30" SECTION LENGTH.
6. SUPPLY FAN / DISCHARGE PLENUM SECTION, 40" TOTAL SECTION LENGTH.
7. RETURN AIR CONNECTION W/ UNIT MOUNTED MOTORIZED DAMPER
8. OUTSIDE AIR CONNECTION W/ UNIT MOUNTED MOTORIZED DAMPER
9. SUPPLY AIR CONNECTION

NOTE:
INSTALL ULTRAVIOLET (UV) LIGHT PACKAGE INSIDE UNIT INTERIOR PER EQUIPMENT MANUFACTURER'S RECOMMENDATIONS.

NOTE:
UNIT OVERALL DIMENSIONS ARE: 188" LENGTH, 64" WIDTH, AND 58" HEIGHT (HEIGHT INCLUDES BASE RAIL). SMALL ADJUSTMENTS MAY BE REQUIRED UPON FINAL SUBMITTAL REVIEW.

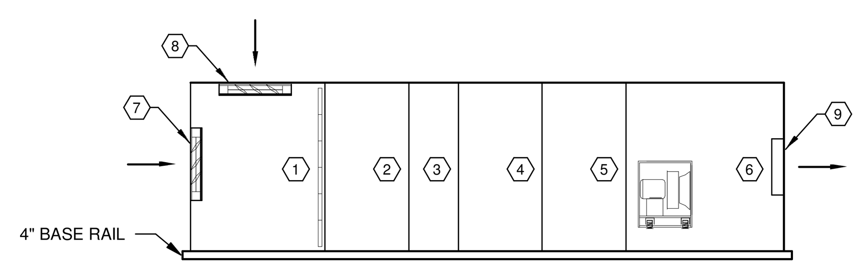

7 AHU-6 DETAIL
N.T.S.

AIR HANDLER SECTIONS

1. AIR MIXING / FILTER SECTION, 20" SECTION LENGTH.
2. PRE-HEAT COIL IFB SECTION, 36" SECTION LENGTH.
3. ACCESS SECTION, 24" SECTION LENGTH.
4. COOLING COIL SECTION, 38" SECTION LENGTH.
5. RE-HEAT SECTION, 30" SECTION LENGTH.
6. SUPPLY FAN / DISCHARGE PLENUM SECTION, 38" TOTAL SECTION LENGTH.
7. RETURN AIR CONNECTION W/ UNIT MOUNTED MOTORIZED DAMPER
8. OUTSIDE AIR CONNECTION W/ UNIT MOUNTED MOTORIZED DAMPER
9. SUPPLY AIR CONNECTION

NOTE:
INSTALL ULTRAVIOLET (UV) LIGHT PACKAGE INSIDE UNIT INTERIOR PER EQUIPMENT MANUFACTURER'S RECOMMENDATIONS.

NOTE:
UNIT OVERALL DIMENSIONS ARE: 186" LENGTH, 52" WIDTH, AND 50" HEIGHT (HEIGHT INCLUDES BASE RAIL). SMALL ADJUSTMENTS MAY BE REQUIRED UPON FINAL SUBMITTAL REVIEW.

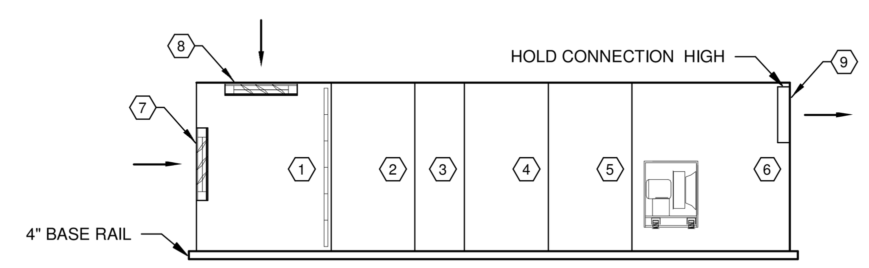

8 BCU-3 DETAIL
N.T.S.

BLOWER COIL SECTIONS

1. AIR MIXING / FILTER SECTION, 33" SECTION LENGTH.
2. COMBINATION PRE-HEAT COIL SECTION / COOLING COIL SECTION, 31" SECTION LENGTH.
3. SUPPLY FAN / DISCHARGE PLENUM SECTION, 31" TOTAL SECTION LENGTH.
4. OUTSIDE AIR CONNECTION W/ UNIT MOUNTED MOTORIZED DAMPER
5. RETURN AIR CONNECTION W/ UNIT MOUNTED MOTORIZED DAMPER
6. SUPPLY AIR CONNECTION

NOTE:
INSTALL ULTRAVIOLET (UV) LIGHT PACKAGE INSIDE UNIT INTERIOR PER EQUIPMENT MANUFACTURER'S RECOMMENDATIONS.

UNIT OVERALL DIMENSIONS ARE: 64" LENGTH, 47.5" WIDTH, AND 73.5" HEIGHT (HEIGHT INCLUDES BASE RAIL).

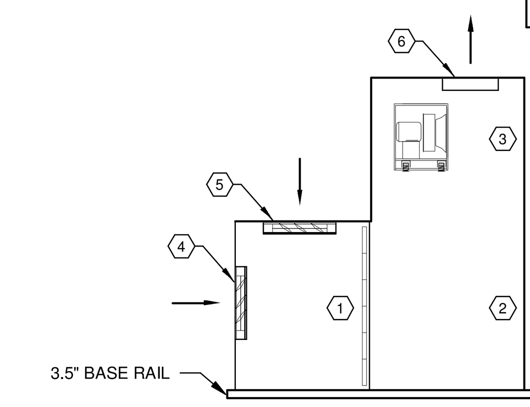

9 DIFFUSER CONNECTION DETAIL
N.T.S.

NOTE:
PROVIDE SUPPORT FOR BRANCH DUCT AS REQ'D TO PREVENT KINKING OF FLEXIBLE DUCT.

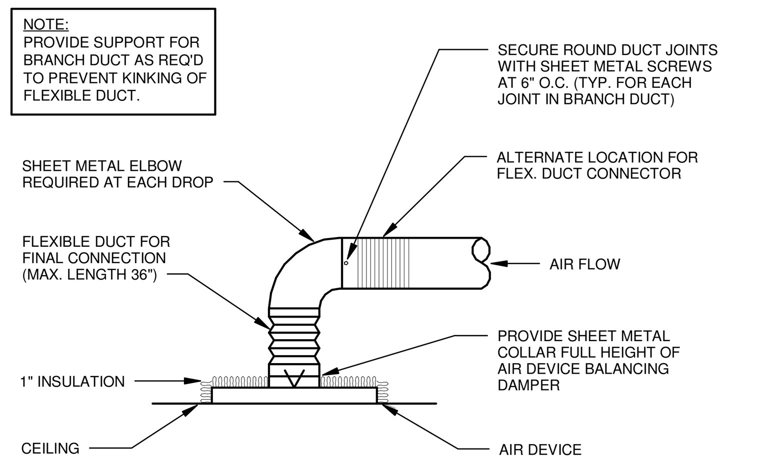

10 CEILING LINEAR SLOT DETAIL
N.T.S.

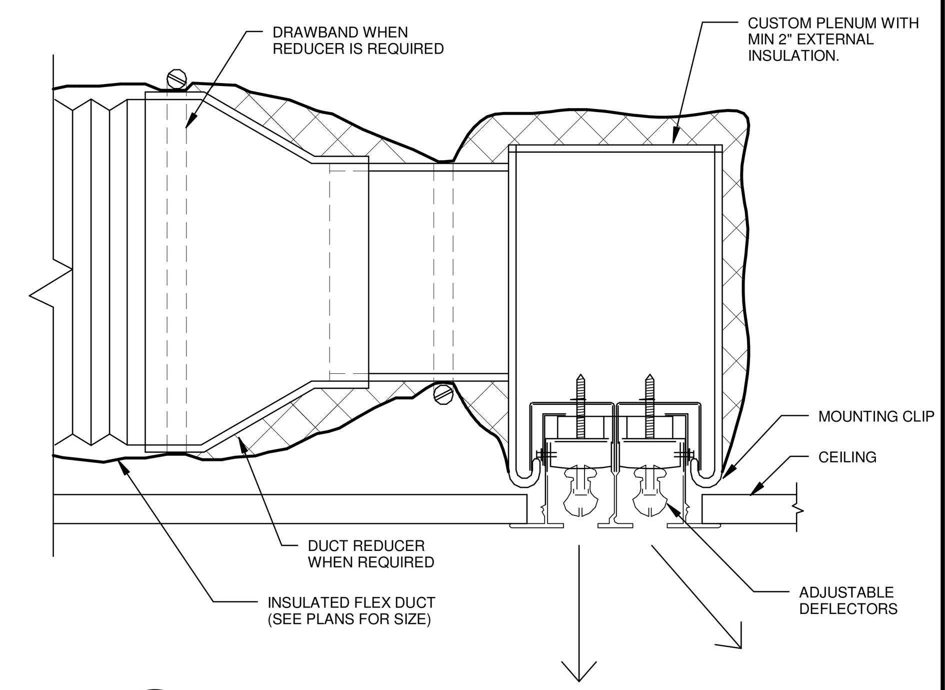

11 DIFFUSER CONNECTION END OF TRUNK DUCT
N.T.S.

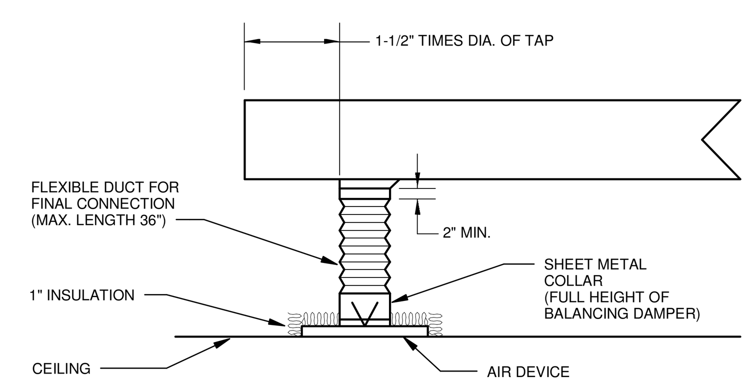

12 DUCT SUPPORT DETAIL
N.T.S.

NOTE:
PROVIDE CONCRETE INSERTS WHERE DUCTWORK IS SUSPENDED FROM CONCRETE DECK (TYPICAL).

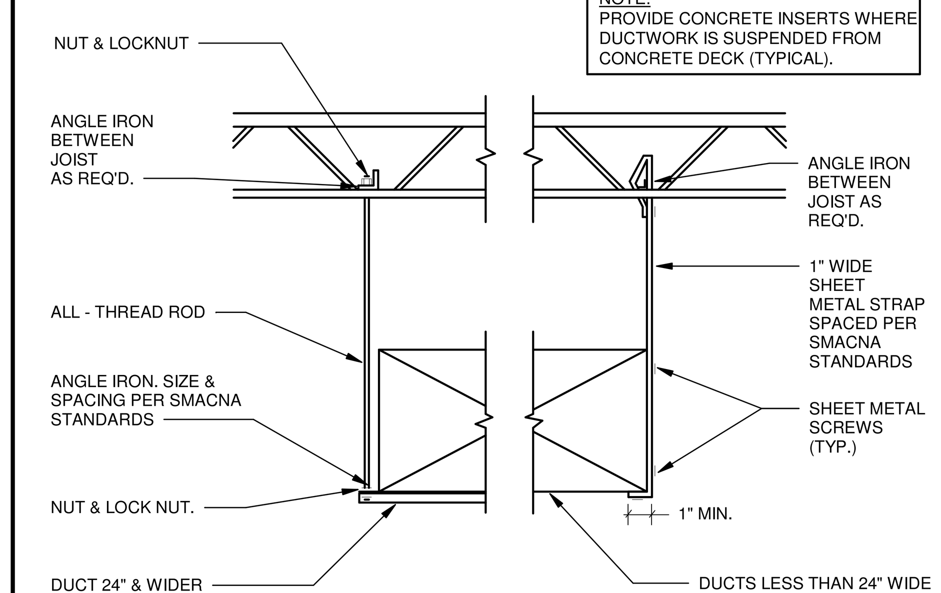

13 DUCT SUPPORT DETAIL
N.T.S.

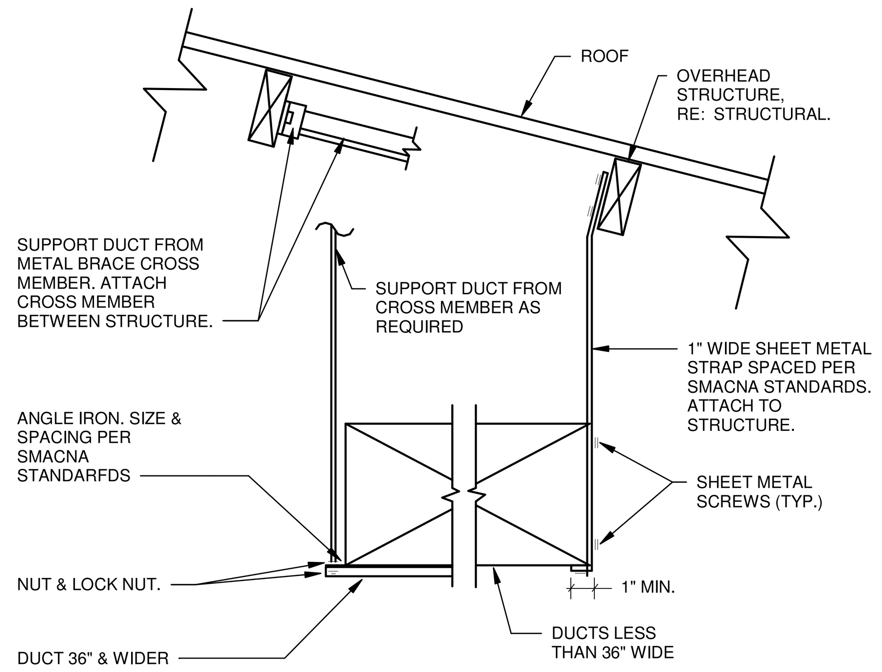

14 EXHAUST FAN DETAIL
N.T.S.

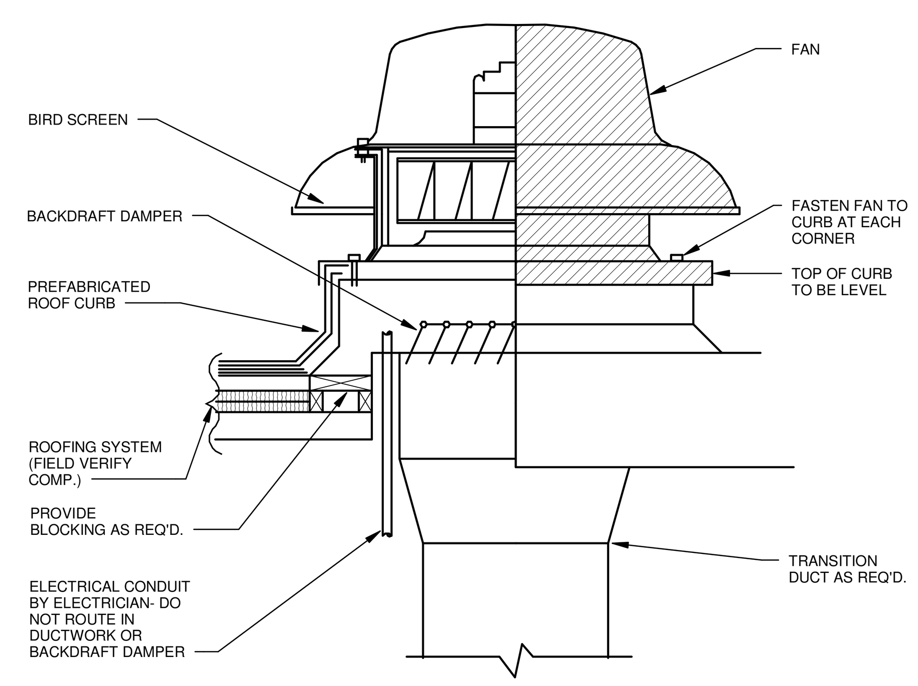

15 EXHAUST FAN DETAIL
N.T.S.

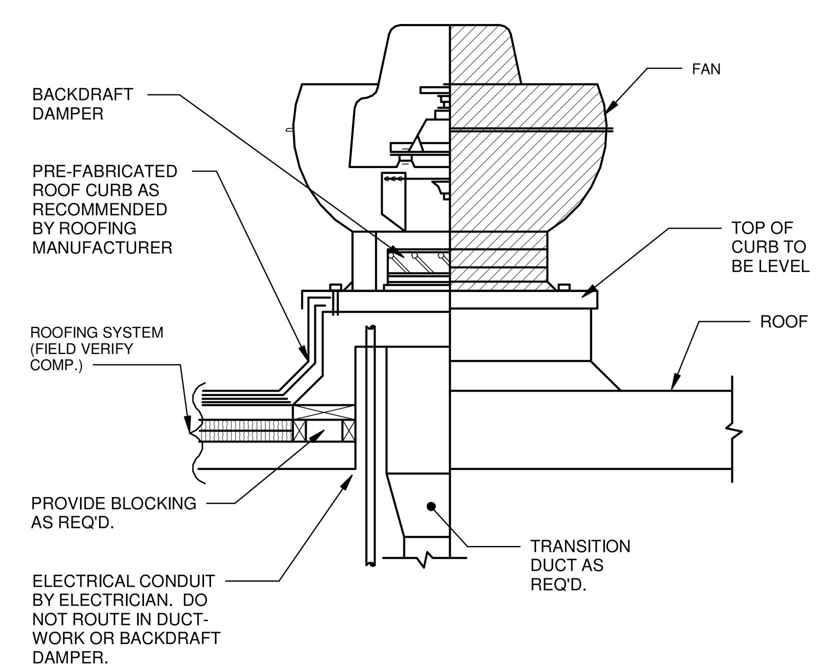

16 A.H.U. DRAIN PIPING
N.T.S.

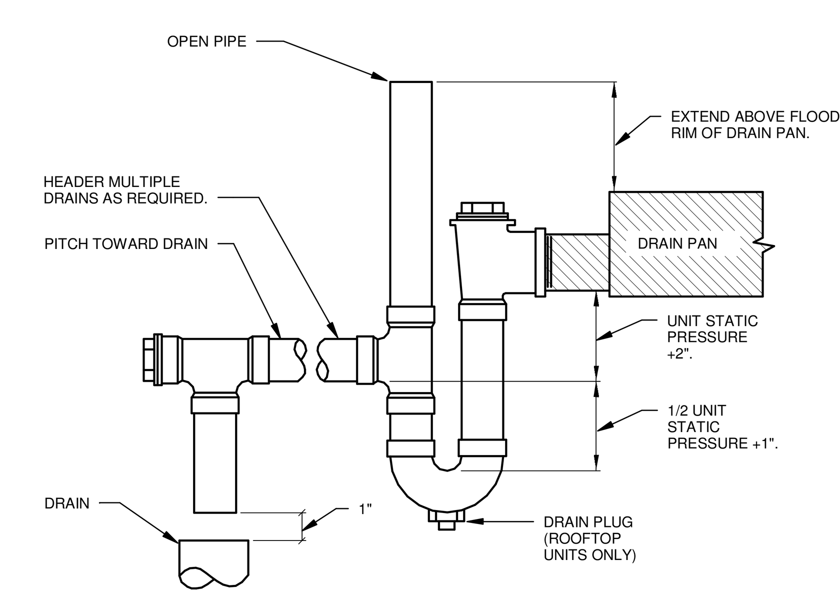

SCM
ARCHITECTS PLLC
1400 KIRK RD, SUITE 220
LITTLE ROCK, AR 72223
LR: (501) 224-3055 FAY: (479) 966-4777
www.scmarchitects.com

STATE OF ARKANSAS REGISTERED PROFESSIONAL ENGINEER No. 15166 TERRY JAMES JACKS 6-21-23

CORPORATE REGISTRATION PETTIT & PETTIT CONSULTING ENGINEERS, INC. No. 78 ARKANSAS ENGINEER

© 2023 PETTIT & PETTIT CONSULTING ENGINEERS, INC.

PERMIT SET

ADDITION AND RENOVATION TO PLEASANT VALLEY COUNTRY CLUB
CLUBHOUSE
1 PLEASANT VALLEY DRIVE
LITTLE ROCK, ARKANSAS 72212

REVISIONS

PROJECT NO. 21075
DATE: June 21, 2023

HVAC DETAILS

M3.01-A

SCM ARCHITECTS P.L.L.C. © 2021