LIGHT FIXTURE SCHEDULE

TYPE MARK	MANUFACTURER	MODEL	ELECTRICAL DATA	DESCRIPTION
A	COLUMBIA LIGHTING	RLB4-35LV-FAM-ED1U	120 V/1-72 VA	4' LED SURFACE MOUNT STRIP LIGHT.
A1	COLUMBIA LIGHTING	RLB4-35LL-FAM-ED1U	120 V/1-29 VA	4' LED SURFACE MOUNT STRIP LIGHT.
A/E	COLUMBIA LIGHTING	RLB4-35LV-FAM-ED1U-ELL14	120 V/1-72 VA	4' LED SURFACE MOUNT STRIP LIGHT WITH EMERGENCY BATTERY.
B	PRESCOLITE	LFCR-6RD-MN-25L35K9-WD-DM1 W/ LFCR-6RD-H-IC	120 V/1-24 VA	6" DOWNLIGHT WITH IC RATED HOUSING. COORDINATE FINISH WITH ARCHITECT.
B2	PRESCOLITE	LFCR-6RD-MN-05L40K9-WD-DM1 W/ LFCR-6RD-H-IC	120 V/1-6 VA	6" DOWNLIGHT WITH IC RATED HOUSING FOR SLOPED CEILING. COORDINATE FINISH WITH ARCHITECT.
B2/E	PRESCOLITE	LFCR-6RD-MN-05L40K9-WD-DM1-EM W/ LFCR-6RD-H-IC	120 V/1-6 VA	6" DOWNLIGHT WITH IC RATED HOUSING AND EMERGENCY BATTERY. COORDINATE FINISH WITH ARCHITECT.
B/E	PRESCOLITE	LFCR-6RD-MN-25L35K9-WD-DM1-EM W/ LFCR-6RD-H-IC	120 V/1-24 VA	6" DOWNLIGHT WITH IC RATED HOUSING AND EMERGENCY BATTERY. COORDINATE FINISH WITH ARCHITECT.
C	LEDI	CBI-28-35-8'6"	120 V/1-24 VA	UNDER-CABINET TAPE LIGHT. COORDINATE EXACT LENGTH WITH ARCHITECT.
F	WILLIAMS	LLM-2-L10/935-S-RD-DIM1-UNV	120 V/1-13 VA	2' SURFACE MOUNT LINEAR LIGHT FIXTURE.
F1	WILLIAMS	LLM-8-L10/935-S-RD-DIM1-UNV	120 V/1-54 VA	8' LED SURFACE MOUNT LINEAR FIXTURE.
F2	WILLIAMS	LLM-12-L10/935-S-RD-DIM1-UNV	120 V/1-80 VA	12' LED SURFACE MOUNT LINEAR FIXTURE.
G	LSI LIGHTING	OPS-WM-3L-5R-UNV-40K8-XXX	120 V/1-20 VA	16" ROUND OUTDOOR WALL LIGHT, WALL MOUNT. COORDINATE FINISH WITH ARCHITECT.
G/E	LSI LIGHTING	OPS-WM-3L-5R-UNV-40K8-XXX-BB	120 V/1-20 VA	16" ROUND OUTDOOR WALL LIGHT, WALL MOUNT WITH EMERGENCY BATTERY. COORDINATE FINISH WITH ARCHITECT
P	VISIONAIRE	AME2-T3-400-PS-1-BOA6-CBA	120 V/1-400 VA	EXISTING POLE LIGHT W/ 20' POLE
X	LSI LIGHTING	VE-U-6-RG-X-WB-XX-SD2	120 V/1-4 VA	LED EDGELIT CEILING MOUNTED EXIT. COORDINATE COLORS AND FINISH WITH ARCHITECT.

LIGHTING KEYED NOTES

1. PROVIDE AND INSTALL 600V 0-10V DIMMING WIRE TO ALL LIGHT FIXTURES IN THE SPACE. WIRE SHALL BE INSTALLED IN CONDUIT.
2. UNDER CABINET LIGHT: PROVIDE AND INSTALL DRIVERS FOR TAPE LIGHTS LOCATED IN THE ELEC 108/IT 102. VERIFY WIRE SIZE FOR VOLTAGE DROP PER MANUFACTURER.
3. LIGHT FIXTURES SHALL BE CONTROLLED VIA THE 'LCP'. ELECTRICAL CONTRACTOR SHALL ROUTE CIRCUIT BACK TO THE 'LCP' IN ELEC 108. SEE THE LIGHTING RELAY PANEL RISER FOR MORE INFORMATION.

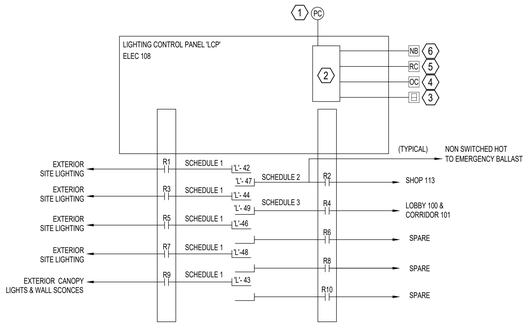

NOTES:

1. LIGHTING CONTROLS SYSTEM SHALL BE PROVIDED AS A COMPLETE AND OPERATIVE SYSTEM. ALL CABLING, MODULES, RELAYS, POWER SUPPLIES, ETC. SHALL BE PROVIDED AS PART OF THE BASE BID.
2. ALL SCHEDULING SHALL BE VERIFIED WITH OWNER PRIOR TO WORK COMMENCING.
3. LIGHTING CONTROL RELAY PANELS SHALL BE UL 924 LISTED AND SHALL TURN ALL CIRCUITS ON WHEN NORMAL POWER IS LOST.
4. COLOR BY ARCHITECT.
5. DO NOT SWITCH THE HOT TO EMERGENCY BALLASTS

SYSTEM SHALL BE EQUAL TO WATTSTOPPER LMCP-24 LIGHTING CONTROL PANEL MEETING REQUIREMENTS OF ASHRAE 90.1-2007 AND IECC 2009.

1. OUTDOOR PHOTOCELL FOR SITE LIGHTING. FIELD LOCATE
2. MASTER PROGRAMMABLE LIGHTING CONTROL RELAY PANEL TO BE EQUAL TO WATTSTOPPER LMCP-24 LIGHTING CONTROL PANEL. ALL TIMES/EVENTS, PROGRAMMED AT THIS PANEL.
3. TYPICAL LOW VOLTAGE CONTROL STATION. PROGRAM PER OWNER DIRECTION.
4. TYPICAL OCCUPANCY SENSOR. PROGRAM PER OWNER DIRECTION.
5. TYPICAL ROOM CONTROLLER. PROGRAM PER OWNER DIRECTION.
6. NETWORK BRIDGES AS REQUIRED TO EXTEND NETWORK CAPACITY.

SCHEDULE PROGRAMMING

SCHEDULE 1 - LIGHTING CONTROLLED BY PHOTOELECTRIC CELL. SYSTEM (ON @ 5 FC). TIMECLOCK OFF FOR OWNER DIRECTED DURATION.

SCHEDULE 2 - ON/OFF VIA WALL SWITCH. AUTOMATIC SWEEP OFF AFTER CLOSE. AUTO ON AT BUSINESS OPENING. TIMES DETERMINED BY OWNER.

SCHEDULE 3 - ON/OFF AT SCHEDULED TIMES. AFTER HOURS OPERATION PROVIDED VIA OCCUPANT OVERRIDE. TIMES DETERMINED BY OWNER.

SCHEDULE 4 - LIGHTING CONTROLLED BY LOCAL ROOM CONTROLLER.

2 LIGHTING RELAY PANEL RISER/'LCP' DIAGRAM

N.T.S.

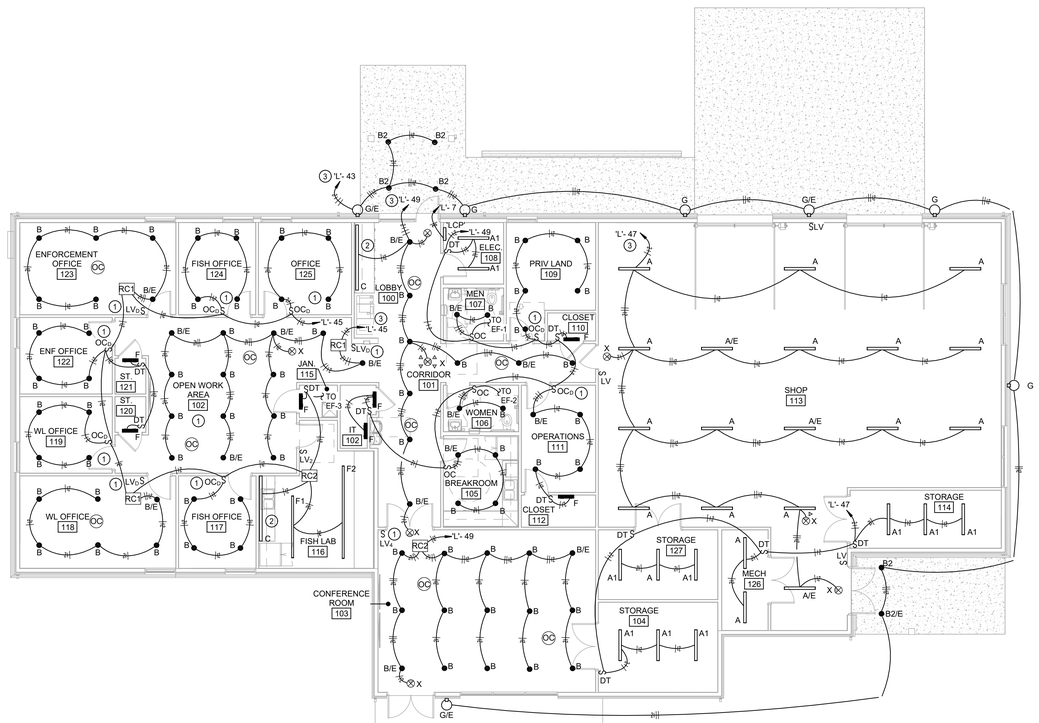

1 FIRST FLOOR PLAN - LIGHTING

1/8" = 1'-0"

WDD ARCHITECTS

ARKANSAS GAME AND FISH COMMISSION
JONESBORO FIELD OFFICE RECONSTRUCTION
600 EAST LAWSON RD.
JONESBORO, AR 72404

FIRST FLOOR PLAN - LIGHTING

NO.	DATE	DESCRIPTION

25-065

07.30.2026

ISSUE

E101

STATE OF ARKANSAS REGISTERED PROFESSIONAL ENGINEER No. 12363 JEFFREY DAVID JENSEN 7-30-26

PETTIT & PETTIT CONSULTING ENGINEERS, INC. LITTLE ROCK, ARKANSAS

CORPORATE REGISTRATION PETTIT & PETTIT CONSULTING ENGINEERS, INC. No. 78 ARKANSAS ENGINEER

© 2026 PETTIT & PETTIT CONSULTING ENGINEERS, INC.