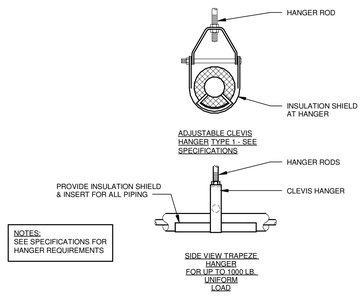

1 PIPING HANGER DETAIL
N.T.S.

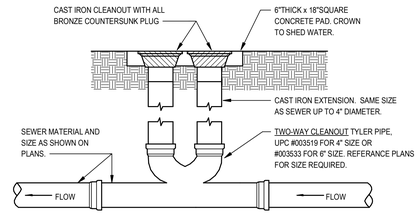

2 TWO-WAY CLEANOUT TO GRADE
SCALE: NONE

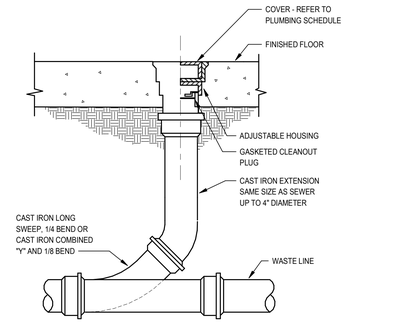

3 FLOOR CLEANOUT DETAIL
SCALE: NONE

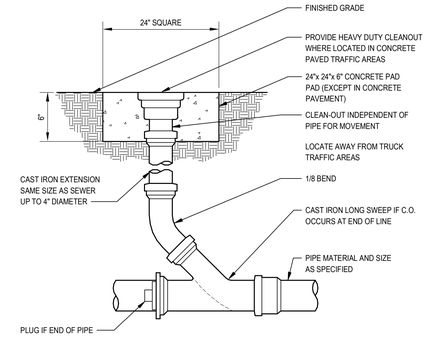

4 EXTERIOR CLEANOUT DETAIL
SCALE: NONE

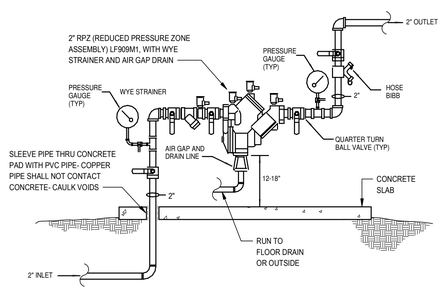

5 REDUCED PRESSURE ZONE ASSEMBLY
SCALE: NONE

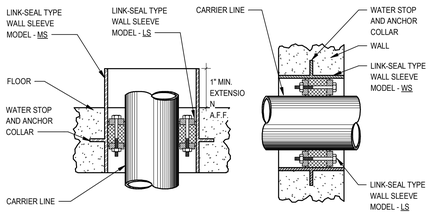

(TYPICAL FOR ALL MAIN WATER AND FIRE PIPE PENETRATIONS THROUGH GROUND FLOOR SLABS AND WALLS THAT ARE BELOW GRADE)

6 WATERPROOF SLEEVE DETAIL
SCALE: NONE

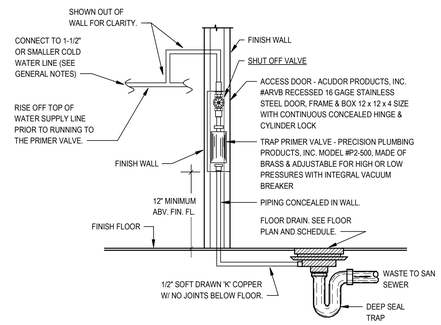

(FOR CONCEALED LOCATIONS)

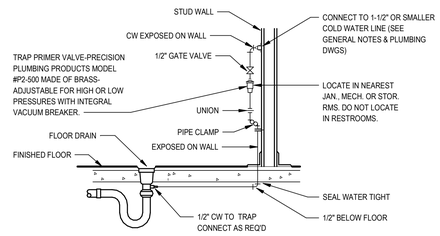

(FOR EXPOSED LOCATIONS)

7 TRAP PRIMER DETAIL
SCALE: NONE

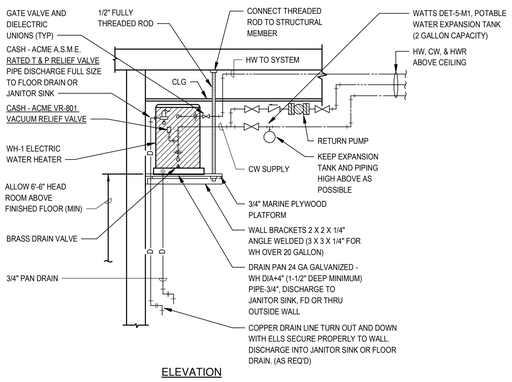

KEEP ALL PIPING AND EXPANSION TANK HIGH AS POSSIBLE FOR MAX. HEADROOM

NOTE: ALL WATER HEATERS WITH A PRESSURIZED STORAGE TANK SHALL BE PROVIDED WITH A DEVICE FOR CONTROLLING PRESSURE DUE TO THERMAL EXPANSION.

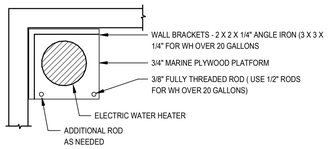

PLAN VIEW

8 ELECTRIC WATER HEATER DETAIL
SCALE: NONE

NOTE: WATER HEATER MUST BE SIDE-CONNECT MODEL

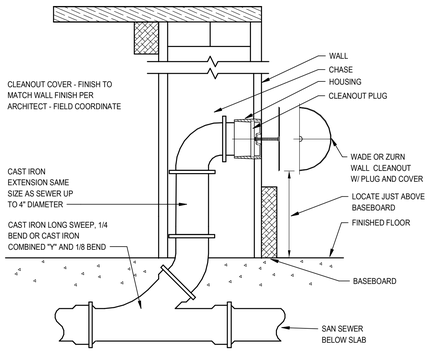

9 WALL CLEANOUT DETAIL
SCALE: NONE

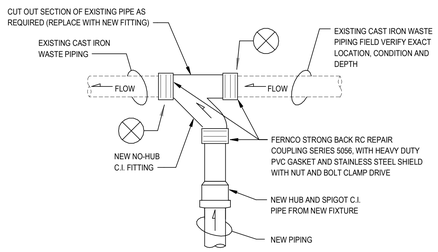

10 CONNECTIONS OF NEW FITTINGS IN EXISTING WASTE PIPING BELOW FLOOR
SCALE: NONE

STATE OF ARKANSAS REGISTERED PROFESSIONAL ENGINEER No. 11043 MARCUS D. CATTET

CORPORATE REGISTRATION PETTIT & PETTIT CONSULTING ENGINEERS, INC. No. 78 ARKANSAS ENGINEER

© 2026 PETTIT & PETTIT CONSULTING ENGINEERS, INC.

WDD ARCHITECTS

ARKANSAS GAME AND FISH COMMISSION
JONESBORO FIELD OFFICE RECONSTRUCTION
600 EAST LAWSON RD
JONESBORO, AR 72404

PLUMBING DETAILS

NO.	DATE	DESCRIPTION

25-065

07.30.2026

ISSUE

P201

2/20/2026 4:21:05 PM Autodesk Docs://Arkansas Game and Fish - Jonesboro Office/25-065 AFFCO Jonesboro Field Office (1700 Patti Conrad).rvt