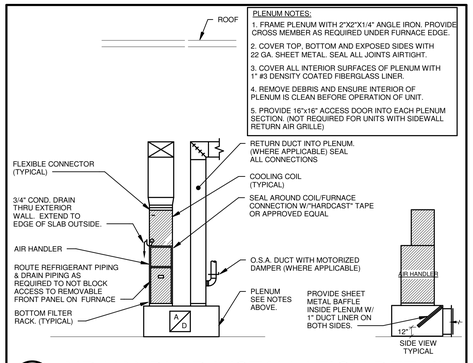

1 AIR HANDLER INSTALLATION DETAIL
N.T.S.

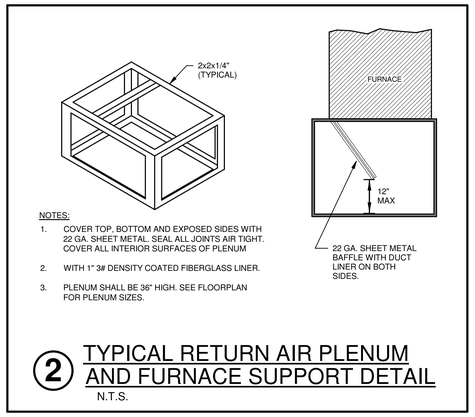

2 TYPICAL RETURN AIR PLENUM AND FURNACE SUPPORT DETAIL
N.T.S.

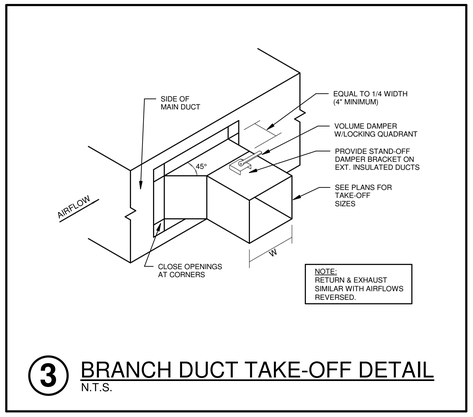

3 BRANCH DUCT TAKE-OFF DETAIL
N.T.S.

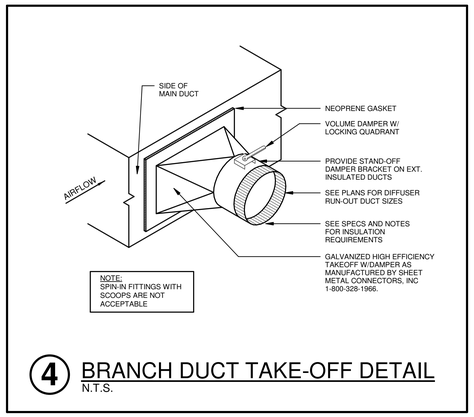

4 BRANCH DUCT TAKE-OFF DETAIL
N.T.S.

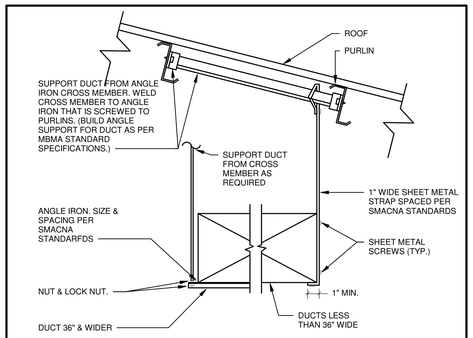

5 DUCT SUPPORT DETAIL
N.T.S.

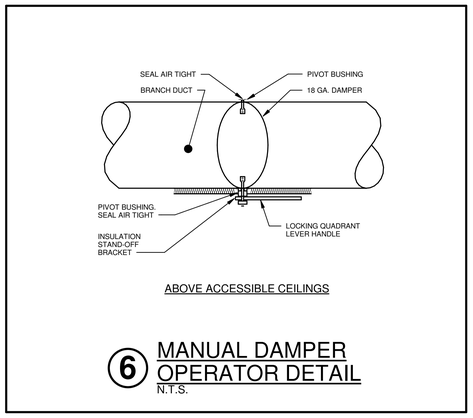

6 MANUAL DAMPER OPERATOR DETAIL
N.T.S.

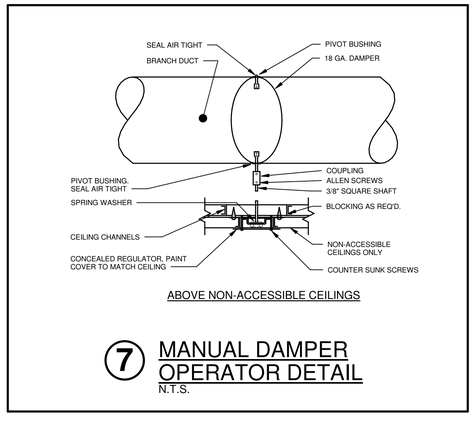

7 MANUAL DAMPER OPERATOR DETAIL
N.T.S.

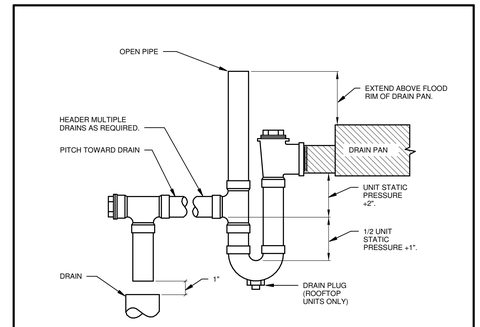

8 A.H.U. DRAIN PIPING
N.T.S.

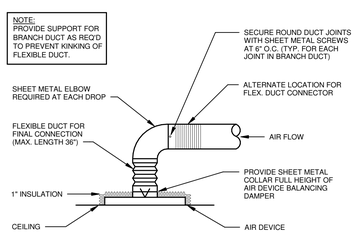

9 DIFFUSER CONNECTION DETAIL
N.T.S.

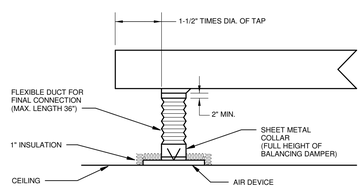

10 DIFFUSER CONNECTION END OF TRUNK DUCT
N.T.S.

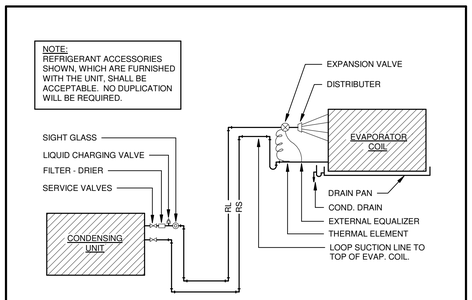

11 REFRIGERANT PIPING DIAGRAM
N.T.S.

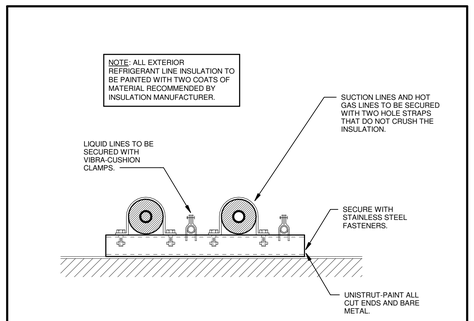

12 REFRIGERANT PIPE SUPPORT DETAIL
N.T.S.

STATE OF ARKANSAS REGISTERED PROFESSIONAL ENGINEER No. 11043 MARCUS D. CASTEEL

CORPORATE REGISTRATION PETTIT & PETTIT CONSULTING ENGINEERS, INC. No. 78 ARKANSAS ENGINEER

© 2026 PETTIT & PETTIT CONSULTING ENGINEERS, INC.

WDD ARCHITECTS

ARKANSAS GAME AND FISH COMMISSION
JONESBORO FIELD OFFICE RECONSTRUCTION
600 EAST LAWSON RD
JONESBORO, AR 72404

HVAC DETAILS

NO.	DATE	DESCRIPTION

25-065

07.30.2026

ISSUE

M301

2/20/2026 4:27:49 PM Autodesk Docs://Arkansas Game and Fish - Jonesboro Office#25-142 AFGC Jonesboro Field Office 2026 Shell Construct.rvt