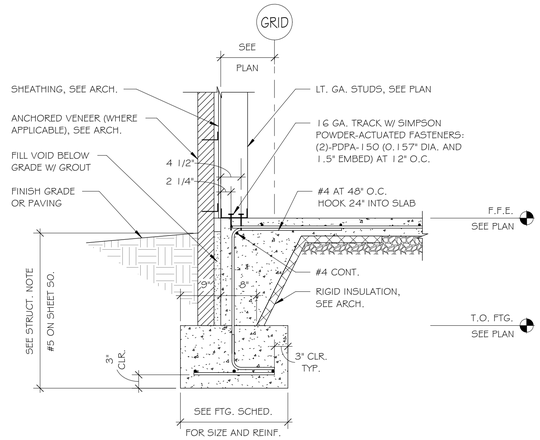

1 TYP. EXTERIOR FTG.
3/4" = 1'-0"

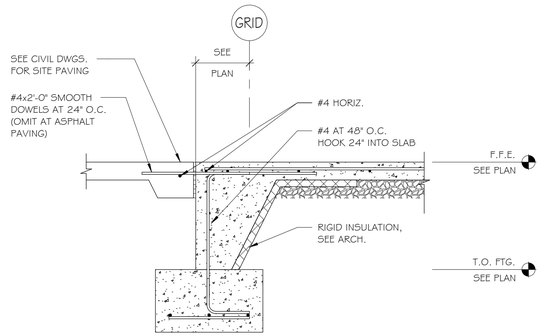

NOTE: SEE DTL. 1/S4 FOR ITEMS NOT NOTED.

2 TYP. EXT. FTG. AT OPNG.
3/4" = 1'-0"

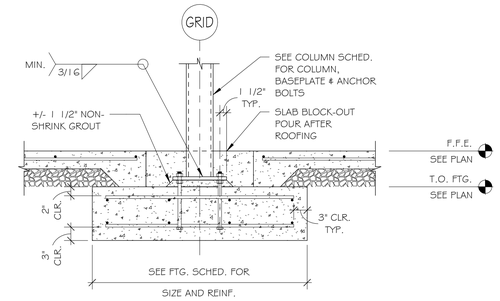

3 TYP. INTERIOR COLUMN FOOTING
3/4" = 1'-0"

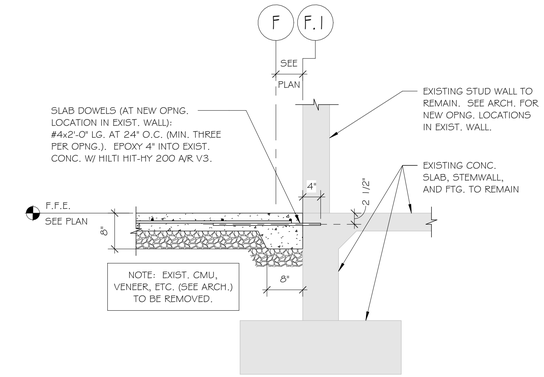

4 SLAB EDGE AT EXIST. BLDG.
3/4" = 1'-0"

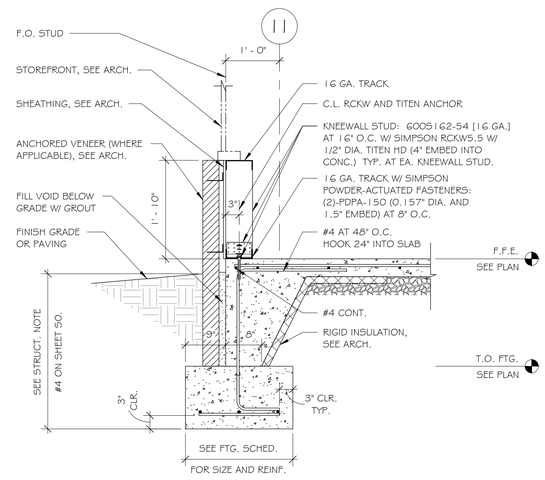

5 KNEEWALL CONN.
3/4" = 1'-0"

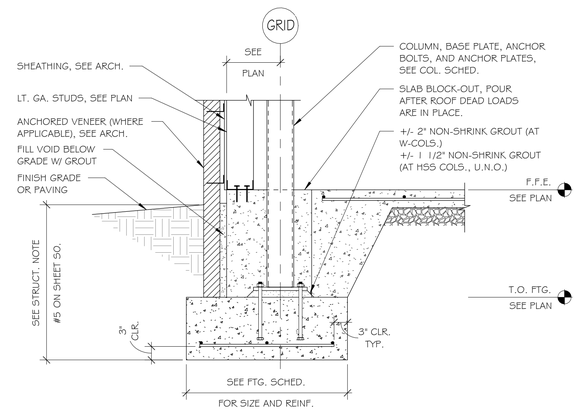

6 TYP. EXTERIOR COL./FTG.
3/4" = 1'-0"

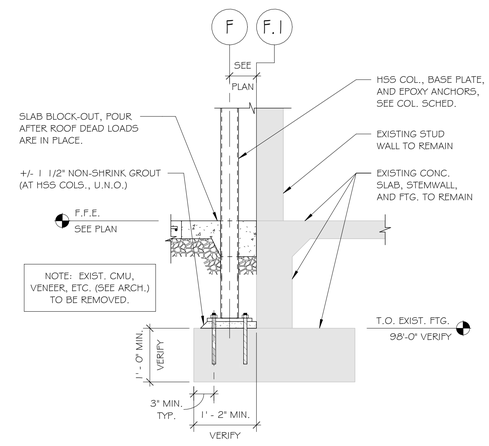

7 NEW COL. AT EXIST. FTG.
3/4" = 1'-0"

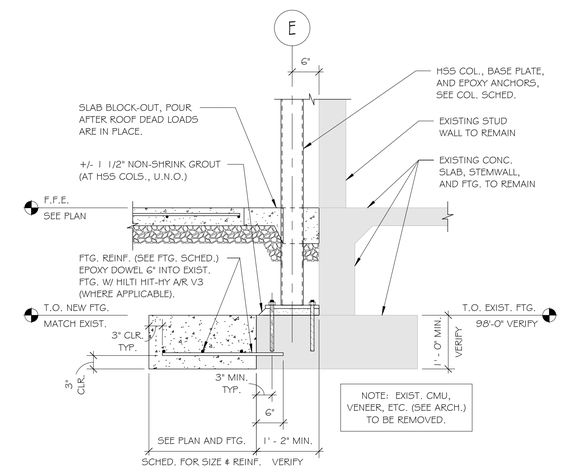

8 NEW COL./FTG. AT EXIST. FTG.
3/4" = 1'-0"

NOTE (TYPE 1 ONLY):
1. ROTATE ABOUT GRID LINES THE COLUMN, BASEPLATE, AND ANCHOR BOLTS AS REQ'D. FOR THE COLUMN TO BE LOCATED WITHIN THE WALL CAVITY. TYP., WHERE NOTED. FOOTINGS DO NOT HAVE TO ROTATE.

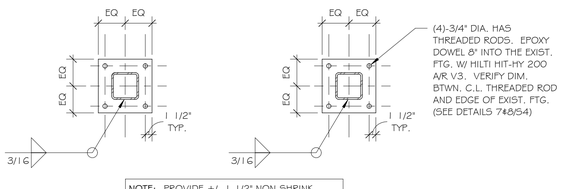

NOTE: PROVIDE +/- 1 1/2" NON-SHRINK GROUT AT MARK "C" LOCATIONS, TYP., U.N.O.

TYPE 1 TYPE 2

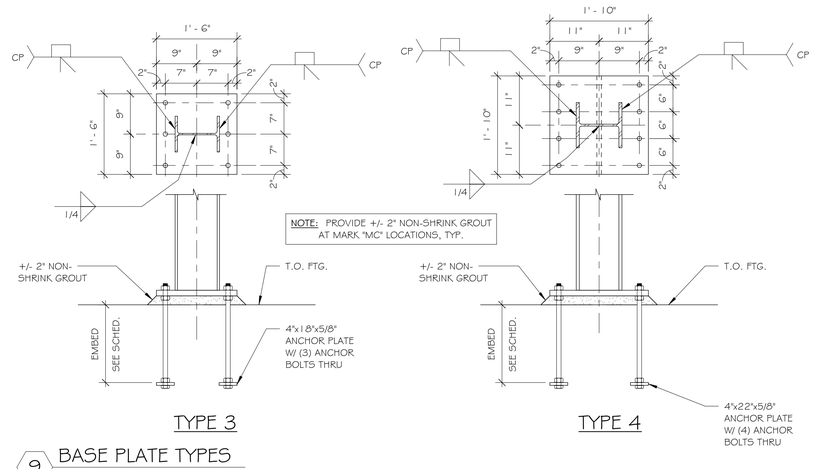

TYPE 3 TYPE 4

9 BASE PLATE TYPES
3/4" = 1'-0"

SEAL STATE OF ARKANSAS REGISTERED PROFESSIONAL ENGINEER No. 11635 LUCAS C. GRAY 2-24-2026

KEY ARCHITECTURE INC.
P.O. BOX 748 FAYETTEVILLE, ARKANSAS 72702
PH: 479.444.6066 FAX: 479.444.1445

Revision Schedule		
Rev. #	Date	Description

NWA PEDIATRICS ADDITION
3730 S PINNACLE HILLS PKWY #3
ROGERS, AR 72758

MANA
3383 N MANA CT. SUITE 201
FAYETTEVILLE, AR 72703

DATE	DRAWN BY
02/23/26	LCG
PROJECT #	CHECKED BY
2438	LCG

SHEET
S4
FOUNDATION DETAILS

JLA Engineers Incorporated
STRUCTURAL CONSULTANTS
P.O. BOX 13
TONTITOWN, AR 72770
TELEPHONE (479) 770-6650
JLA JOB #3245

CERTIFICATE OF AUTHORIZATION JLA ENGINEERS INCORPORATED No. 1594 ARKANSAS

These Drawings and Specifications are the exclusive property of Key Architecture Inc. and are protected by Copyright. Use or reproduction is prohibited without written consents.

3/4" = 1'-0" 2/24/2026 11:10:18 AM Autodesk Docs://3245 MANA Pinnacle Hills Addition/3245 MANA Pinnacle Hills Addition RVT 2025.rvt