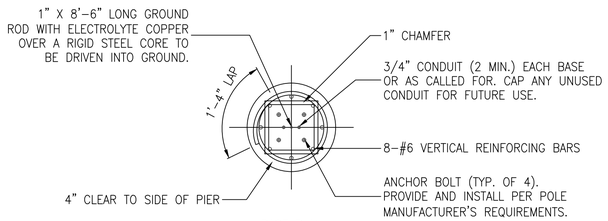

BASE PLAN

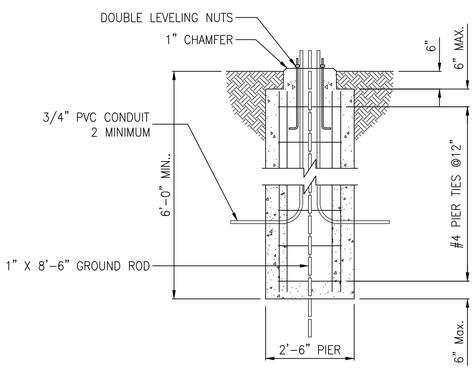

BASE SECTION

NOTES:
1. INSTALLATION TO BE COMPLETED IN ACCORDANCE WITH MANUFACTURER'S SPECIFICATIONS.
2. DO NOT SCALE DRAWINGS.

CONCRETE BASE FOR LIGHTPOLE

MAXIMUM 20' HEIGHT

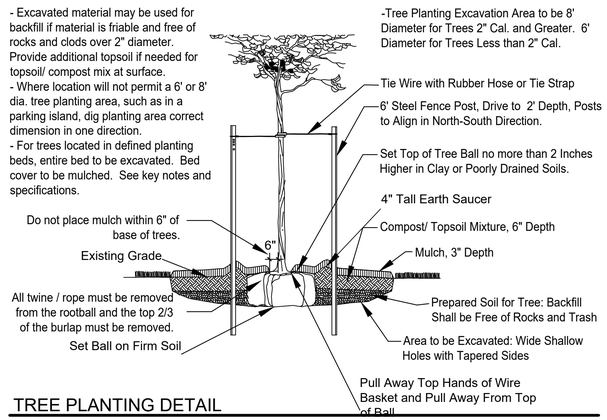

TREE PLANTING DETAIL

N.T.S.

LANDSCAPING

1. PREPARE TOPSOIL FOR SHRUB AND GROUND COVER BEDS BY TILLING A 2 INCH LAYER (165 CF PER 1000 SQ. FT.) OF COMPOST INTO THE UPPER 6 INCHES OF SOIL.
2. ALL PLANTING BEDS THAT ABUT LAWN AREAS TO BE BORDERED BY STEEL EDGING.
3. SOLID SLAB SOD BERMUDA GRASS OR BERMUDA SEED TO BE PLANTED IN ALL TURF AREAS.
4. TOPSOIL DEPTH SHALL BE MINIMUM 18" IN ALL SHRUB AND GROUNDCOVER BEDS.
5. APPLY 3" OF ORGANIC MULCH TO ALL SHRUB AND GROUNDCOVER BEDS.
6. APPLY 1/2 POUND OSMOCOTE 8-6-12 EVENLY OVER CULTIVATED AREA AROUND EACH TREE AND 1 POUND PER 100 SQUARE FEET TO SHRUB AND GROUND COVER PLANTINGS.
7. IRRIGATION SHALL BE AN UNDERGROUND AUTOMATIC SYSTEM.
8. TREAT ALL LANDSCAPE AREAS TO CONTROL WEED GROWTH PRIOR TO STARTING CONSTRUCTION.
9. ALL LANDSCAPE BEDS SHALL BE FREE OF SOD AND MULCH SHALL COVER THE BARE SOIL TO EASE MAINTENANCE.
10. DIG DOWN THE EDGE OF ALL BEDS WHERE THEY ARE ADJACENT TO WALLS, WALKWAYS OR CURBS, SO THAT THE WALL, WALKWAY, OR CURB WILL WORK AS A BED EDGE TO CONTAIN THE MULCH OR GRAVEL.
11. PLANTING BEDS SHALL HAVE AMENDED SOIL TO INSURE THE HEALTH OF THE PLANT MATERIALS.

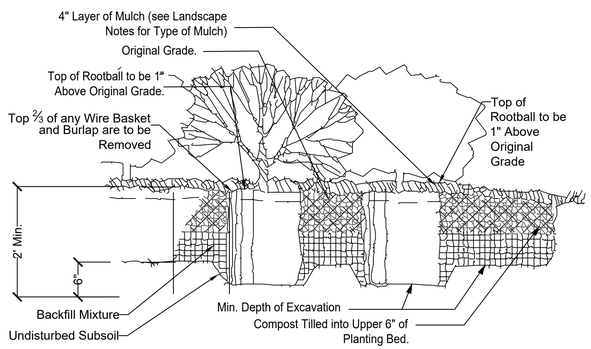

SHRUB PLANTING DETAIL

N.T.S.

TREES

1. EXCAVATION FOR TREE PITS SHALL BE 8' IN DIAMETER. CIRCLE TO BE CENTERED ON TREE AND TRUE IN FORM.
2. STAKE ALL TREES BY USING THREE METAL FENCE POST STAKES AND THREE TIES. DRIVE STAKES APPROXIMATELY 6" OUTSIDE OF TREE ROOTBALL AND AN EQUAL DISTANCE FROM TREE TRUNK.
3. ALL PRESERVED MATURE TREES ON THE SITE SHALL HAVE A MULCH RING ADDED AROUND THE TRUNK.
4. ALL PLANTING HOLES FOR TREES AND SHRUBS SHALL BE BACKFILLED WITH AMENDED SOIL, FREE OF SOD.
5. ALL LANDSCAPE TREES PLANTED TO MEET STREET TREE, MITIGATION TREE OR OTHER LANDSCAPE CODE REQUIREMENTS MUST BE SINGLE STEM, MINIMUM 2" CALIPER TREES. NO DOUBLE OF TRI-STEM TREES WILL BE COUNTED TOWARDS MEETING REQUIREMENTS.
6. IF PLANTING MATERIAL IS TO BE B&B THEN THE B&B MUST BE NATURAL FIBERS AND NOT SYNTHETIC.

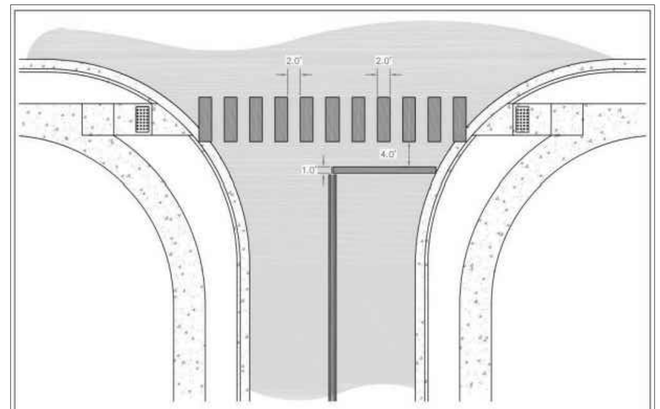

1. WIDTH OF THE CROSSWALK STRIPING SHALL BE THE WIDTH OF THE SIDEWALK PLUS TWO (2) FEET. 1 FOOT EXTRA ON EACH SIDE OF RAMP.
2. CROSSWALK STRIPING SHALL BE CENTERED ON THE ADA RAMP.
3. CROSSWALKS SHALL BE PLACED AT ALL STREET INTERSECTIONS WHERE THERE ARE ADA RAMPS.
4. ALL CROSSWALKS AND STOP BARS SHALL BE WHITE THERMOPLASTIC.
5. CROSSWALKS ARE TO BE INSTALLED PERPENDICULAR TO THE STREET UNLESS APPROVED OTHERWISE BY THE CITY.
6. CROSSWALK PANELS SHALL BE PLACED PARALLEL WITH THE ROAD CENTERLINE.
7. ALL MARKINGS SHALL COMPLY WITH THE CURRENT EDITION OF THE MUTCD.

CITY OF ROGERS
301 WEST CHESTNUT STREET
ROGERS, ARKANSAS 72756
(479) 621-1186

TYPICAL CROSSWALK DETAILS

NOT TO SCALE | FEBRUARY 15, 2012

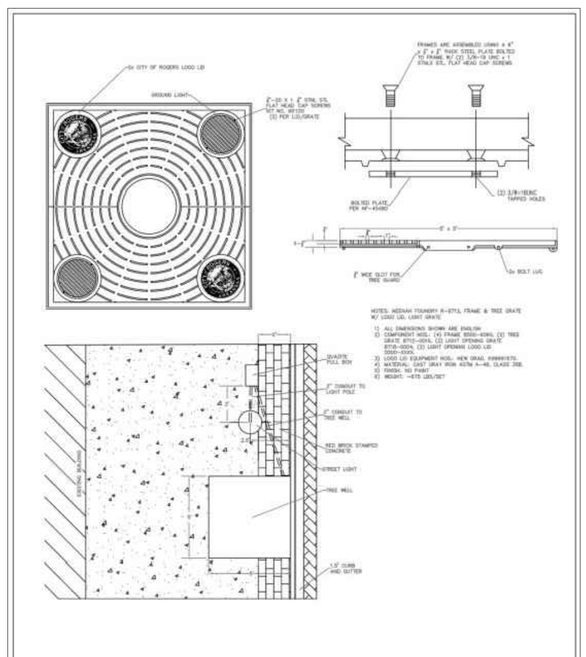

CITY OF ROGERS
301 WEST CHESTNUT STREET
ROGERS, ARKANSAS 72756
(479) 621-1186

TREE WELL PLANTING DETAIL

NOT TO SCALE | PAGE 1 OF 2 | April 10, 2024

ENGINEER: GB
DRAWN BY: MW

STATE OF ARKANSAS REGISTERED PROFESSIONAL ENGINEER No. 9810 GEOFFREY H. BATES
02-19-2026
CERTIFICATE OF AUTHORIZATION BATES & ASSOCIATES, INC. #335 ARKANSAS ENGINEER

Copyright © 2023 Bates & Associates, Inc.

REVISIONS	DATE
SKETCH PLAN FOR REVIEW	11/06/25
1ST SUBMITTAL	11/26/25
2ND SUBMITTAL	01/14/26
3RD SUBMITTAL	01/28/26
ADDED ROOF DRAIN	02/05/26
PLOTTED CONSTRUCTION PLAN	02/05/26
UPDATES TO TITLE BLOCK	02/18/26
ADDED NOTE REGARDING IRRIGATION	02/19/26

MANA HEALTH BUILDING ADDITION
SDP / PIP
SITE DETAILS
ROGERS, ARKANSAS

BATES
Engineers - Surveyors
7230 S Pleasant Ridge Dr / Fayetteville, AR 72704
PH: (479) 442-9350 / batesnwa.com

PROJECT NO. 16-260

DRAWING NO.
DT2