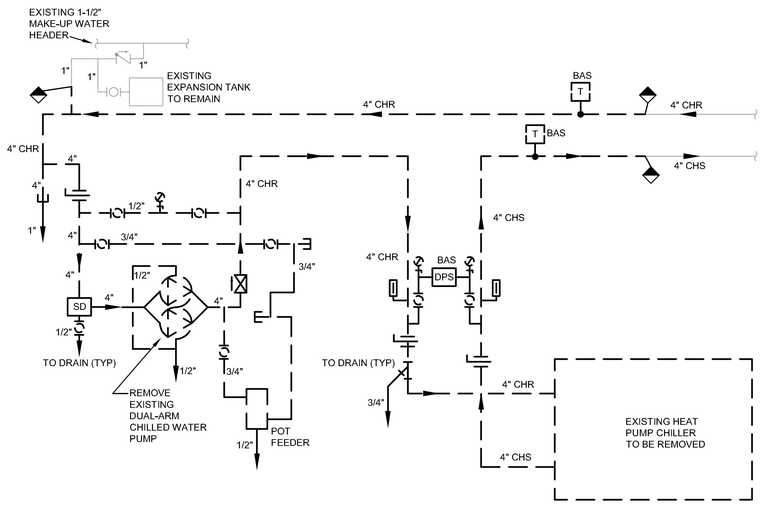

1 CHILLED WATER PIPING SCHEMATIC - DEMOLITION
NTS

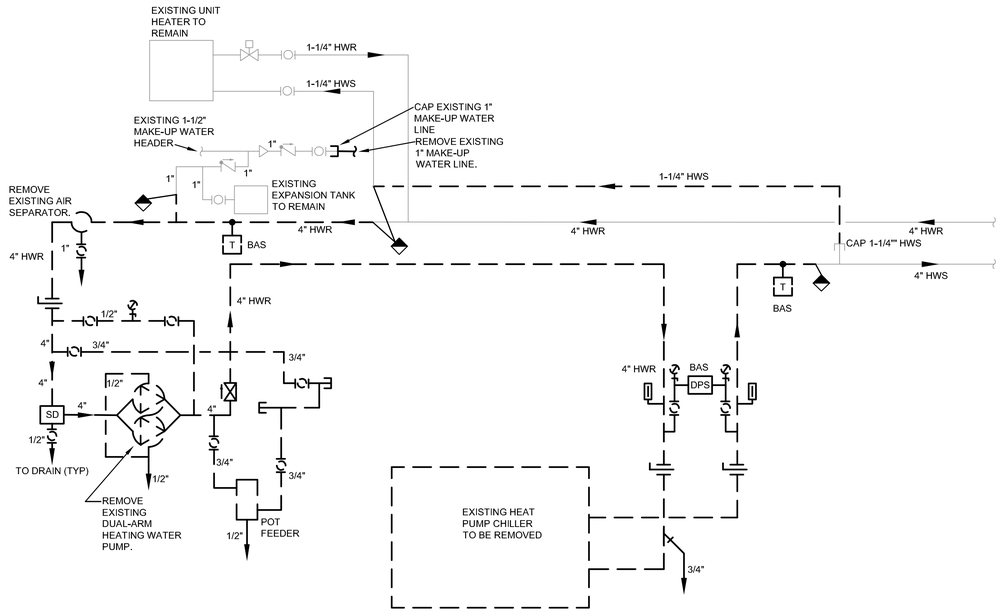

2 HEATING WATER PIPING SCHEMATIC - DEMOLITION
NTS

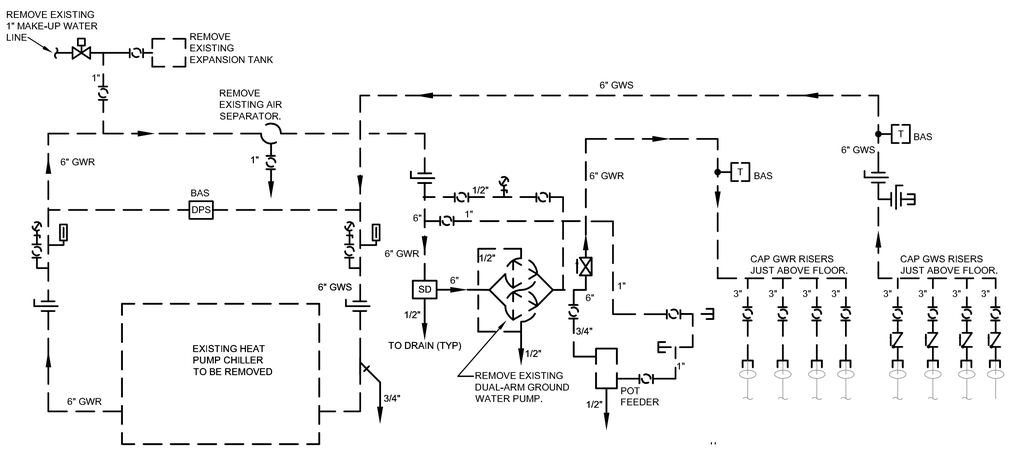

3 GROUND WATER PIPING SCHEMATIC - DEMOLITION
NTS

PIPING LEGEND

- FLEXIBLE CONNECTION
- BAS FM — FLOW METER PROVIDED BY CONTROL CONTRACTOR
- BAS DP — DIFFERENTIAL PRESSURE SENSOR BY CONTROL CONTRACTOR
- P & T TAP
- BAS T — CONTROL SYSTEM TEMPERATURE SENSOR
- BLR T — BOILER CONTROL SYSTEM TEMPERATURE SENSOR
- CH FL — CHILLED WATER FLOW SWITCH PROVIDED BY CHILLER MANUFACTURER
- BAS FL — CONTROL SYSTEM FLOW SWITCH
- BAS VFD — VARIABLE FREQUENCY DRIVE
- PRESSURE GAUGE
- THERMOMETER
- CONTROL VALVE
- CONTROL BYPASS VALVE
- PLUG TYPE BALANCING VALVE
- BUTTERFLY VALVE WITH LEVER LOCK OPERATOR
- BUTTEFLY VALVE WITH GEAR OPERATOR
- AIR VENT - AUTOMATIC
- AIR VENT - MANUAL
- GATE VALVE
- BALL VALVE
- "Y" STRAINER
- PIPING REDUCER/INCREASER
- PRESSURE REDUCNG VALVE
- GLOBE VALVE
- UNION
- PRESSURE RELIEF VALVE
- CHECK VALVE
- TRIPLE DUTY VALVE
- PUMP
- CONNECT TO EXISTING
- DEMOLITION TERMINATION
- DEMOLITION KEY NOTE
- HVAC KEY NOTE
- EXISTING PIPING/EQUIPMENT TO REMAIN
- EXISTING PIPING/EQUIPMENT TO BE REMOVED
- NEW PIPING/EQUIPMENT
- PIPE CAP
- DIRECTION OF FLOW
- PIPE ELBOW DOWN
- PIPE ELBOW UP
- PIPE FLANGE
- PIPE TEE
- PIPE 90° ELBOW
- PIPE 45° ELBOW
- HOSE BIBB

REVIEW DRAWINGS

PRELIMINARY — CORPORATE REGISTRATION — PETTIT & PETTIT CONSULTING ENGINEERS, INC. No. 78 — ARKANSAS ENGINEER — © 2026 PETTIT & PETTIT CONSULTING ENGINEERS, INC.

PRELIMINARY — STATE OF ARKANSAS — REGISTERED PROFESSIONAL ENGINEER No.15166 — JAMES TAYLOR

PETTIT & PETTIT CONSULTING ENGINEERS, INC. LITTLE ROCK, ARKANSAS

pettitpettit CONSULTING ENGINEERS, INC
201 EAST MARKHAM STREET, SUITE 400 | LITTLE ROCK, AR 72201-1631 | 501.374.3731 | WWW.PETTITINC.COM

UAF JEAN TYSON CDC HVAC UPGRADES
UNIVERSITY OF ARKANSAS
FAYETTEVILLE, ARKANSASAS

JOB NO.	25-120
DESIGN	TJJ/MEE
DATE	8-11-26
SHEET NO.	M2.0