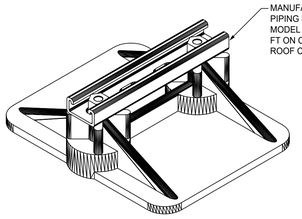

ROOFTOP AC UNIT CONDENSATE SUPPORT — DETAIL NO: 1

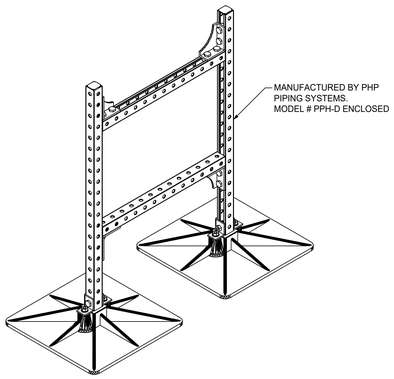

OUTDOOR DUCTWORK SUPPORT — DETAIL NO: 2

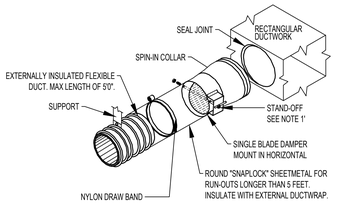

NOTES:
1. PROVIDE STAND-OFF AND EXTENSION ROD TO ACCOMMODATE INSULATION.
2. INSULATE SPIN-IN WITH EXTERNAL DUCT WRAP. SLIT INSULATION AT DAMPER RODS. SEAL JOINTS VAPOR TIGHT WITH MASTIC.
3. SEAL ALL JOINTS TO PREVENT LEAKAGE.

LOW PRESSURE ROUND BRANCH DUCT CONNECTOR — DETAIL NO: 3

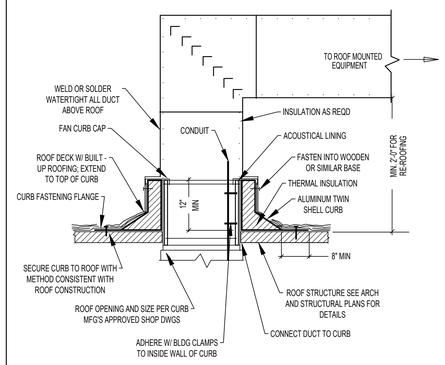

DUCT PENETRATION THRU ROOF — DETAIL NO: 4

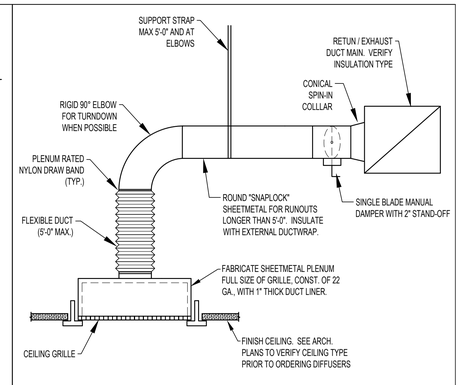

RETURN / EXHAUST GRILLE DETAIL — DETAIL NO: 5

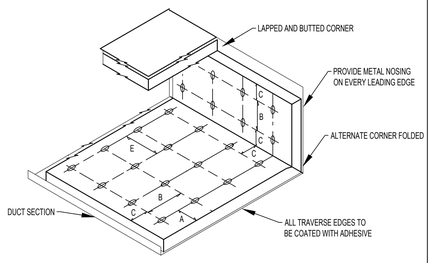

MAXIMUM SPACING FOR FASTENERS ACTUAL INTERVALS CARE APPROXIMATE				
VELOCITY	DIMENSIONS			
	A	B	C	E
0-2500 FPM	3"	12"	4"	18"
2501-6000 FPM	3"	6"	4"	16"

NOTE:
LINER ADHERED TO THE DUCT WITH 90% MINIMUM AREA COVERAGE OF ADHESIVE.

DUCT LINER INSTALLATION — DETAIL NO: 6

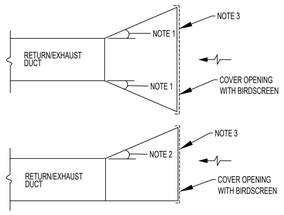

NOTES:
1. MAXIMUM ANGLE OF 15 DEGREES.
2. MAXIMUM ANGLE OF 30 DEGREES.
3. MAXIMUM FACE VELOCITY OF 700 PER MINUTE. FREE AREA OF OPENING IN SQUARE FEET SHALL BE DETERMINED BY REQUIRED CFM DIVIDED BY 700.

EXPOSED RETURN AIR OPENING — DETAIL NO: 7

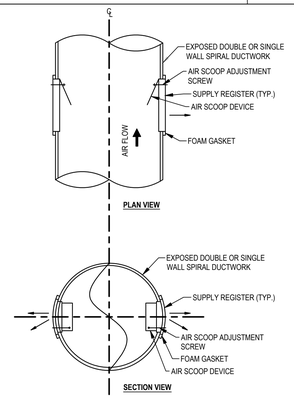

SPIRAL DUCT SUPPLY GRILLE — DETAIL NO: 8

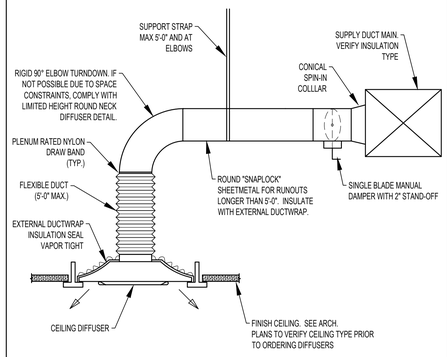

CEILING DIFFUSER — DETAIL NO: 9

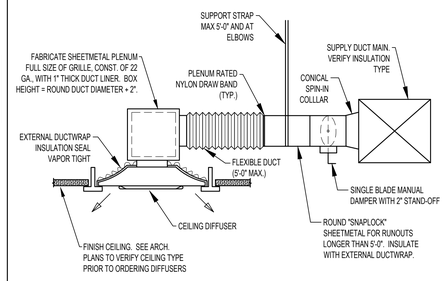

LOW PRESSURE BRANCH DUCT / LIMITED HEIGHT ROUND NECK DIFFUSER — DETAIL NO: 10

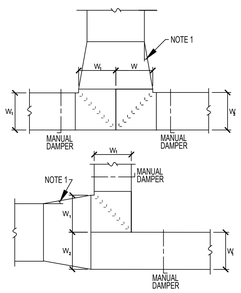

NOTE:
1. MAXIMUM 15 DEGREE ANGLE FOR ECCENTRIC FITTING. MAXIMUM 30 DEGREE ANGLE FOR CONCENTRIC FITTING.

EQUAL AREA SPLITTER — DETAIL NO: 11

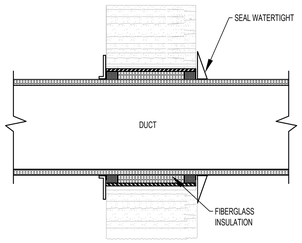

DUCT OUTSIDE WALL PENETRATION — DETAIL NO: 12

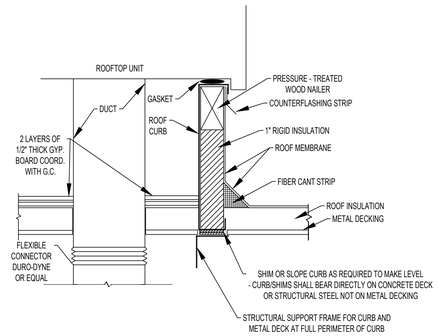

ROOFTOP UNIT CURB — DETAIL NO: 13

NOTE:
EQUIPMENT SHALL BE ANCHORED TO WITHSTAND TOTAL WIND LOAD AT INTERNATIONAL MECHANICAL CODE WIND ZONE FOR BAYTOWN, TX.

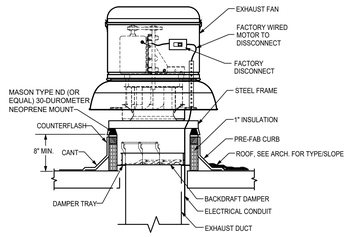

NOTES:
1. PROVIDE BIRD AND DEBRIS SCREEN INTERNAL TO HOUSING.

DOWNBLAST ROOF EXHAUSTER — DETAIL NO: 14

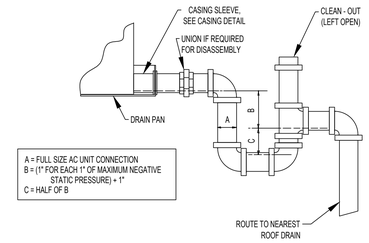

AC UNIT DRAIN TRAP (NEGATIVE PRESSURE) — DETAIL NO: 15

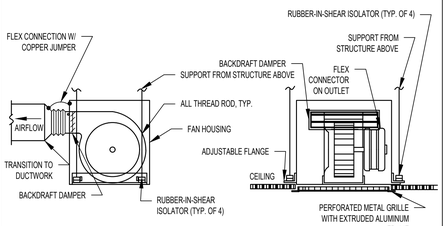

NOTES:
1. PROVIDE LOCAL POWER DISCONNECT
2. PROVIDE THIN LINE LOUVER WITH FLANGE FRAME BETWEEN CABINET FAN AND GRILLE AS REQUIRED

CEILING MOUNTED EXHAUST FAN — DETAIL NO: 16

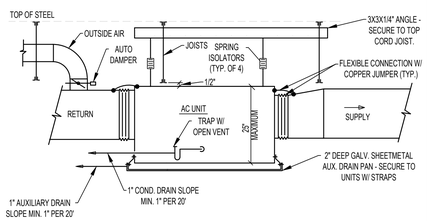

HORIZONTAL AC UNIT SUSPENDED FROM STRUCT. — DETAIL NO: 17

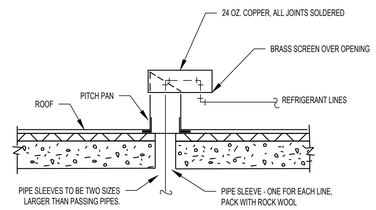

REFRIGERANT LINE ROOF PENETRATION — DETAIL NO: 18

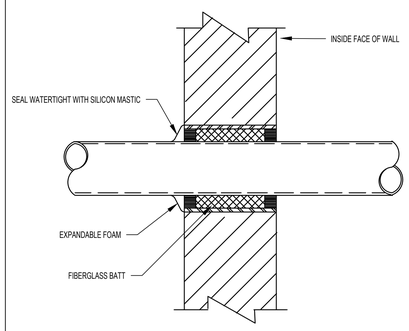

PIPE SLEEVE FOR OUTSIDE WALL ABOVE GRADE — DETAIL NO: 19

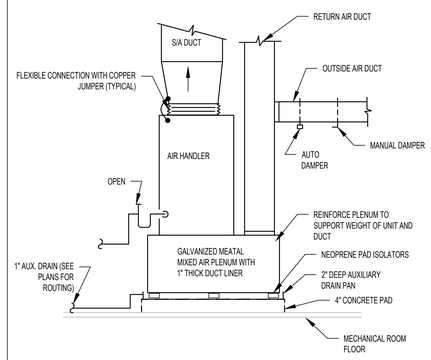

VERTICAL AC UNIT — DETAIL NO: 20

BBG&S
Engineering Consultants, Inc.
MECHANICAL ELECTRICAL ARCHITECTURAL
2870 Old Rocky Ridge Road, Suite 115
Birmingham, AL 35243
Phone: 205-995-9979
www.bbgs.com

2-25-19	JHB	ISSUED FOR BID
3-29-19	MDG	ISSUED FOR CO
4-25-19	JHB	ISSUED FOR CO

LIVE design group
architecture interior design
3117 2nd Avenue South Birmingham, AL 35233
p 205.870.3090
www.LIVEdesigngroup.com

ARKANSAS REGISTERED PROFESSIONAL ENGINEER No. 14850 JAMES J. BONN
08/12/25

CALVARY CHURCH
CALVARY CHURCH FACILITY ADDITION
BENTONVILLE, AR

Revisions

No.	Description	Date

Project Number
21010

Date
08/12/25

HVAC Details

M6.01

This drawing is the property of LIVE design group pc, and is not to be reproduced, copied, or altered in whole or in part or used for any purpose without the approval of LIVE design group pc, and is to be returned upon request.