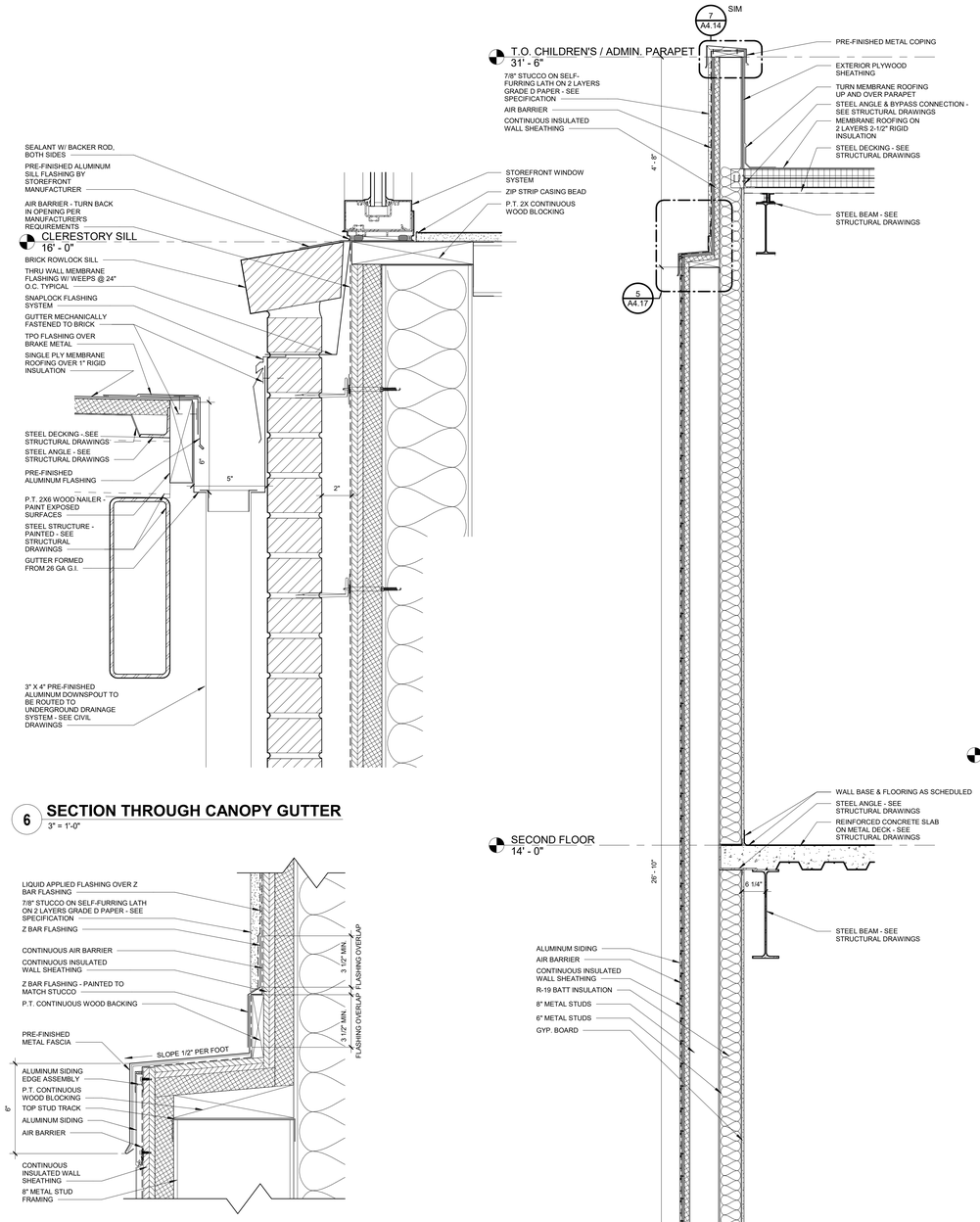

3 WALL SECTION THROUGH ACCENT WALL 01
3/4" = 1'-0"

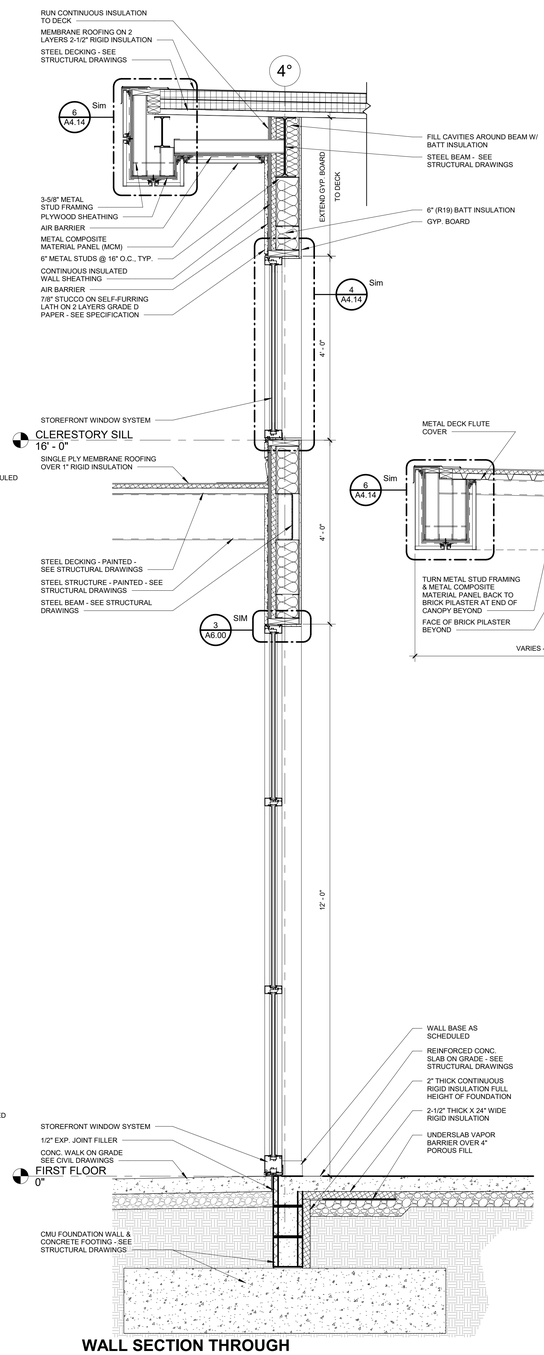

2 WALL SECTION THROUGH ENGINEERED CANOPY 02
3/4" = 1'-0"

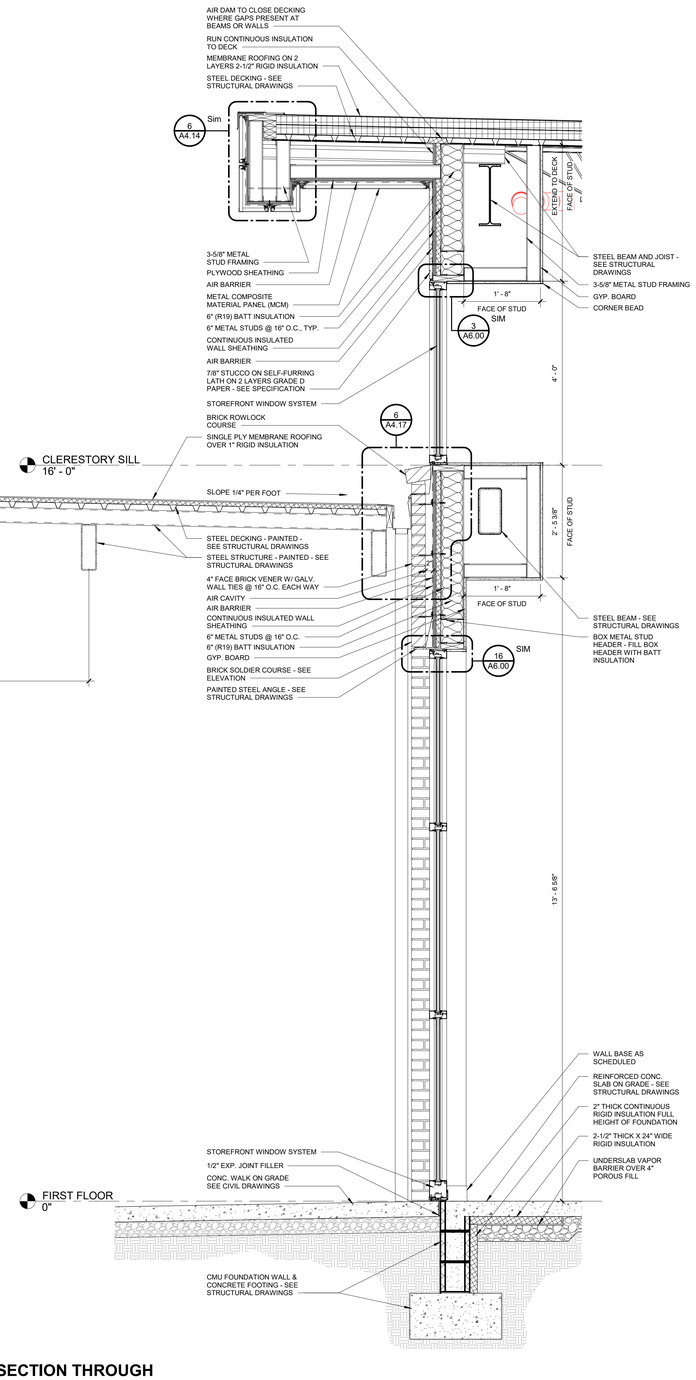

1 WALL SECTION THROUGH ENGINEERED CANOPY
3/4" = 1'-0"

6 SECTION THROUGH CANOPY GUTTER
3" = 1'-0"

5 ACCENT WALL @ STUCCO TRANSITION
3" = 1'-0"

LIVE design group
architecture interior design
3117 2nd Avenue South Birmingham, AL 35233
p 205.870.3090
www.LIVEdesigngroup.com

REGISTERED ARCHITECT
CRAIG A. KRAWCZYK
No. 10045
STATE OF ARKANSAS

Digitally signed by Craig A Krawczyk
Date: 2025.09.17 16:00:37 -05'00'

CALVARY CHURCH
CALVARY CHURCH FACILITY ADDITION
BENTONVILLE, AR

Revisions

No.	Description	Date
1	Addendum 01	09/12/25

Project Number
21010

Date
08/12/2025

WALL SECTIONS

A4.17

This drawing is the property of LIVE design group pc, and is not to be reproduced, copied, or altered in whole or in part or used for any purpose without the approval of LIVE design group pc, and is to be returned upon request. 3117 2nd Avenue South Birmingham, AL 35233 | p 205.870.3090 | www.LIVEdesigngroup.com

9/16/2025 7:34:05 PM