WIRING DIAGRAM (US4050)

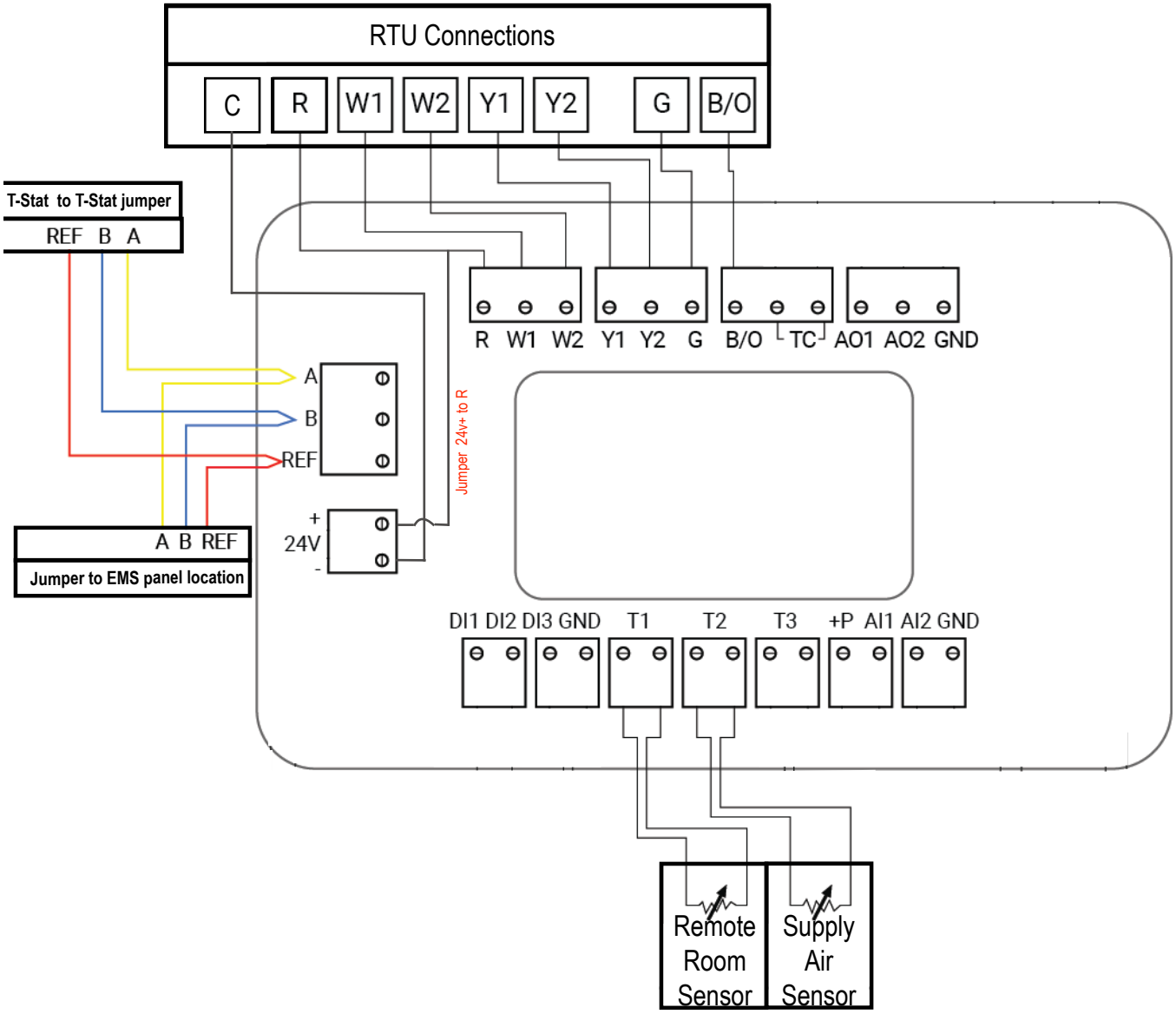

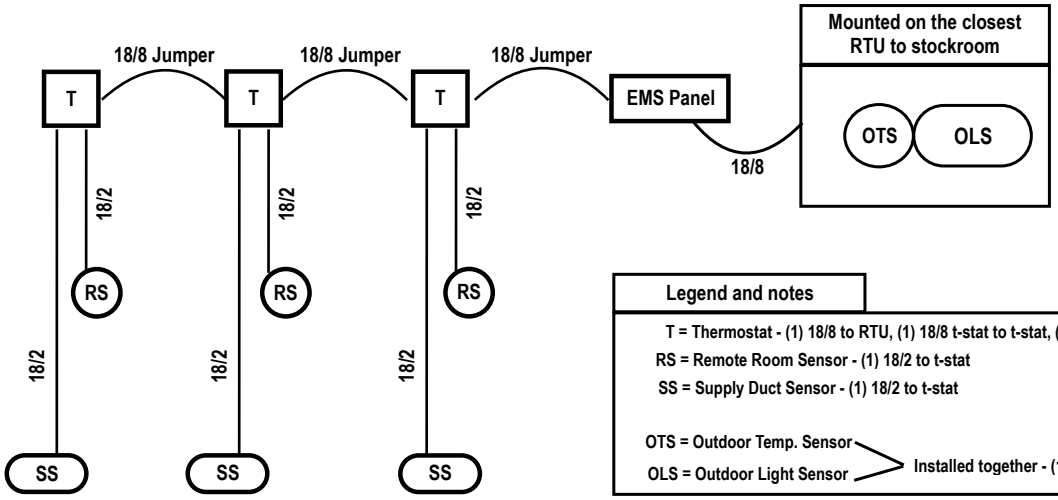

Legend and notes

T = Thermostat - (1) 18/8 to RTU, (1) 18/8 t-stat to t-stat, (1) 18/8 t-stat to EMS panel

RS = Remote Room Sensor - (1) 18/2 to t-stat

SS = Supply Duct Sensor - (1) 18/2 to t-stat

OTS = Outdoor Temp. Sensor

OLS = Outdoor Light Sensor

Installed together - (1) 18/8 to EMS panel