# IOM

**PROJECT:** **VA – Renovate Logistics – B1**

**LOCATION:** **Fayetteville, AR**

**ENGINEER:** **Harrell Design Group**

**MECHANICAL CONTRACTOR:** **Comfort Systems**

**EQUIPMENT:** **Wall Mount Mini Split**
**Tagged: AH-LOG-106 and CU-LOG-106**

**DATE:** **June 12, 2026**


***Josh Davis***
***josh@airetechcorp.com***
***(479) 756-8600***

**3241 W. Huntsville Avenue ● Springdale, AR 72762**
**Voice (479)756-8600 ● Fax (479)751-0576**

# SINGLE ZONE MEGA, STANDARD EFFICIENCY, AND MEGA 115V WALL MOUNTED INSTALLATION MANUAL

Single Zone Mega: LS090HEV2, LS120HEV2, LS180HEV2, LS240HEV2

Single Zone Standard Efficiency: LS090HFV3, LS120HFV3, LS180HFV3, LS240HFV3

Single Zone Mega 115V: LS090HXV2, LS120HXV2

# PROPRIETARY DATA NOTICE

**This document, as well as all reports, illustrations, data, information, and other materials are the property of LG Electronics U.S.A., Inc., and are disclosed by LG Electronics U.S.A., Inc., only in confidence.**
**This document is for design purposes only.**

## ⃠ Do not throw away, destroy, or lose this manual.

Please read carefully and store in a safe place for future reference.
Content familiarity required for proper installation.

The instructions included in this manual must be followed to prevent product malfunction, property damage, injury, or death to the user or other people. Incorrect operation due to ignoring any instructions will cause harm or damage. The level of seriousness is classified by the symbols described below.

A summary list of safety precautions begins on page 3.

**For more technical materials such as submittals, engineering databooks, and catalogs, visit www.lghvac.com.**

For continual product development, LG Electronics U.S.A., Inc., reserves the right to change specifications without notice.
©LG Electronics U.S.A., Inc.

*This document, as well as all reports, illustrations, data, information, and other materials are the property of LG Electronics U.S.A., Inc.*

The instructions below must be followed to prevent product malfunction, property damage, injury or death to the user or other people. Incorrect operation due to ignoring any instructions will cause harm or damage. The level of seriousness is classified by the symbols described below.

## TABLE OF SYMBOLS

| | |
|---|---|
| ⚠DANGER | *This symbol indicates an imminently hazardous situation which, if not avoided, will result in death or serious injury.* |
| ⚠WARNING | *This symbol indicates a potentially hazardous situation which, if not avoided, could result in death or serious injury.* |
| ⚠CAUTION | *This symbol indicates a potentially hazardous situation which, if not avoided, may result in minor or moderate injury.* |
| ***Note:*** | *This symbol indicates situations that may result in equipment or property damage accidents only.* |
| ⃠ | *This symbol indicates an action must not be completed.* |

## INSTALLATION

### ⚠DANGER

⃠ **Don't store or use flammable gas / combustibles near the unit.**
*There is risk of fire, explosion, and physical injury or death.*

### ⚠WARNING

⃠ **Do not install or remove the unit by yourself (end user). Ask the dealer or an LG trained service provider to install the unit.**
*Improper installation by the user will result in water leakage, fire, explosion, electric shock, physical injury or death.*

**For replacement of an installed unit, always contact an LG trained service provider.**
*There is risk of fire, electric shock, explosion, and physical injury or death.*

**The unit is shipped with refrigerant and the service valves closed.** ⃠ **Do not open service valves on the unit until all non-condensibles have been removed from the piping system and authorization to do so has been obtained from the commissioning agent.**
*There is a risk of physical injury or death.*

⃠ **Do not run the compressor with the service valves closed.**
*There is a risk of explosion, physical injury, or death.*

**Periodically check that the outdoor frame is not damaged.**
*There is a risk of explosion, physical injury, or death.*

**Replace all control box and panel covers.**
*If cover panels are not installed securely, dust, water and animals will enter the unit, causing fire, electric shock, and physical injury or death.*

**Always check for system refrigerant leaks after the unit has been installed or serviced.**
*Exposure to high concentration levels of refrigerant gas will lead to illness or death.*

**Wear protective gloves when handling equipment. Sharp edges will cause personal injury.**

**Dispose the packing materials safely.**
- *Packing materials, such as nails and other metal or wooden parts, will cause puncture wounds or other injuries.*
- *Tear apart and throw away plastic packaging bags so that children do not play with them and risk suffocation and death.*

**Install the unit considering the potential for strong winds or earthquakes.**
*Improper installation will cause the unit to fall over, resulting in physical injury or death.*

⃠ **Do not change the settings of the protection devices.**
*If the pressure switch, thermal switch, or other protection device is shorted and forced to operate improperly, or parts other than those specified by LG are used, there is risk of fire, electric shock, explosion, and physical injury or death.*

⃠ **Do not install the unit on a defective stand.**
*There is a risk of physical injury.*




Due to our policy of continuous product innovation, some specifications may change without notification.
©LG Electronics U.S.A., Inc., Englewood Cliffs, NJ. All rights reserved. "LG" is a registered trademark of LG Corp.

# SAFETY INSTRUCTIONS

## INSTALLATION - CONTINUED

### ⚠WARNING

**If the air conditioner is installed in a small space, take measures to prevent the refrigerant concentration from exceeding safety limits in the event of a refrigerant leak.**
*Consult the latest edition of ASHRAE (American Society of Heating, Refrigerating, and Air Conditioning Engineers) Standard 15. If the refrigerant leaks and safety limits are exceeded, it could result in personal injuries or death from oxygen depletion.*

**Install the unit in a safe location where nobody can step on or fall onto it.**
*There is risk of physical injury or death.*

**Properly insulate all cold surfaces to prevent "sweating."**
*Cold surfaces such as uninsulated piping can generate condensate that could drip, causing a slippery surface that creates a risk of slipping, falling, and personal injury.*

### ⚠CAUTION

**Be very careful when transporting the product. Failure to follow these directions will result in minor or moderate physical injury.**

- ⃠ *Do not attempt to carry the product without assistance.*
- *Some products use polypropylene bands for packaging.* ⃠ *Do not use polypropylene bands to lift the unit.*
- *Suspend the unit from the base at specified positions.*
- *Support the unit a minimum of four points to avoid slippage from rigging apparatus.*

***Note:***

⃠ **Don't install the unit where it's directly exposed to ocean winds.**
*Ocean winds will cause corrosion, particularly on the condenser and evaporator fins, which, in turn could cause product malfunction or inefficient performance.*

**When installing the unit in a low-lying area, or a location that is not level, use a raised concrete pad or concrete blocks to provide a solid, level foundation.**
*This will prevent water damage and reduce abnormal vibration.*

**Properly insulate all cold surfaces to prevent "sweating."**
*Cold surfaces such as uninsulated piping can generate condensate that will drip and cause a slippery surface condition and/or water damage to walls.*

**When installing the unit in a hospital, mechanical room, or similar electromagnetic field (EMF) sensitive environment, provide sufficient protection against electrical noise.**
*Inverter equipment, power generators, high-frequency medical equipment, or radio communication equipment will cause the air conditioner to operate improperly. The unit will also affect such equipment by creating electrical noise that disturbs medical treatment or image broadcasting.*

⃠ **Do not use the product for special purposes such as preserving foods, works of art, wine coolers, or other precision air conditioning applications. The equipment is designed to provide comfort cooling and heating.**
*There is risk of property damage.*

⃠ **Do not make refrigerant substitutions. Use R410A only.**
*If a different refrigerant is used, or air mixes with original refrigerant, the unit will malfunction and be damaged.*

**Keep the unit upright during installation to avoid vibration or water leakage.**

⃠ **Do not install the unit in a noise sensitive area.**
**When connecting refrigerant tubing, remember to allow for pipe expansion.**
*Improper piping will cause refrigerant leaks and system malfunction.*

**Take appropriate actions at the end of HVAC equipment life to recover, recycle, reclaim or destroy R410A refrigerant according to applicable U.S. Environmental Protection Agency (EPA) rules.**

**Periodically check that the outdoor frame is not damaged.**
*There is a risk of equipment damage.*

**Install the unit in a safe location where nobody can step on or fall onto it.** ⃠ **Do not install the unit on a defective stand.**
*There is risk of unit and property damage.*

**Install the drain hose to ensure adequate drainage.**
*There is a risk of water leakage and property damage.*

⃠ **Don't store or use flammable gas / combustibles near the unit.**
*There is risk of product failure.*

**Always check for system refrigerant leaks after the unit has been installed or serviced.**
*Low refrigerant levels will cause product failure*

**The unit is shipped with refrigerant and the service valves closed.** ⃠ **Do not open service valves on the unit until all non-condensibles have been removed from the piping system and authorization to do so has been obtained from the commissioning agent.**
*There is a risk of refrigerant contamination, refrigerant loss and equipment damage.*

⃠ **Do not run the compressor with the service valves closed.**
*There is a risk of equipment damage.*



Due to our policy of continuous product innovation, some specifications may change without notification.
©LG Electronics U.S.A., Inc., Englewood Cliffs, NJ. All rights reserved. "LG" is a registered trademark of LG Corp.

## WIRING

### ⚠DANGER

**High voltage electricity is required to operate this system. Adhere to the National Electrical Codes and these instructions when wiring.**
*Improper connections and inadequate grounding can cause accidental injury or death.*

**Always ground the unit following local, state, and National Electrical Codes.**

**Turn the power off at the nearest disconnect before servicing the equipment.**
*Electrical shock can cause physical injury or death.*

**Properly size all circuit breakers or fuses.**
*There is risk of fire, electric shock, explosion, physical injury or death.*

### ⚠WARNING

**The information contained in this manual is intended for use by an industry-qualified, experienced, certified electrician familiar with the U.S. National Electric Code (NEC) who is equipped with the proper tools and test instruments.**
*Failure to carefully read and follow all instructions in this manual can result in personal injury or death.*

**All electric work must be performed by a licensed electrician and conform to local building codes or, in the absence of local codes, with the National Electrical Code, and the instructions given in this manual.**
*If the power source capacity is inadequate or the electric work is not performed properly, it will result in fire, electric shock, physical injury or death.*

**Refer to local, state, and federal codes, and use power wires of sufficient current capacity and rating.**
*Wires that are too small will generate heat and cause a fire.*

**Secure all field wiring connections with appropriate wire strain relief.**
*Improperly securing wires will create undue stress on equipment power lugs. Inadequate connections will generate heat, cause a fire and physical injury or death.*



***Note:***
**The information contained in this manual is intended for use by an industry-qualified, experienced, certified electrician familiar with the U.S. National Electric Code (NEC) who is equipped with the proper tools and test instruments.**
*Failure to carefully read and follow all instructions in this manual can result in equipment malfunction and property damage,.*

Due to our policy of continuous product innovation, some specifications may change without notification.
©LG Electronics U.S.A., Inc., Englewood Cliffs, NJ. All rights reserved. "LG" is a registered trademark of LG Corp.

# SAFETY INSTRUCTIONS

## OPERATION

### ⚠DANGER

**⃠ Do not provide power to or operate the unit if it is flooded or submerged.**
*There is risk of fire, electric shock, physical injury or death.*

**Use a dedicated power source for this product.**
*There is risk of fire, electric shock, physical injury or death.*

**⃠ Do not operate the disconnect switch with wet hands.**
*There is risk of fire, electric shock, physical injury or death.*

**Periodically verify that the hardware securing the unit has not deteriorated.**
*If the unit falls from its installed location, it can cause property damage, product failure, physical injury or death.*

**If gas leaks out, ventilate the area before operating the unit.**
*If the unit is mounted in an enclosed, low-lying, or poorly ventilated area, and the system develops a refrigerant leak, it will cause fire, electric shock, explosion, physical injury or death.*

### ⚠WARNING

**⃠ Do not allow water, dirt, or animals to enter the unit.**
*There is risk of fire, electric shock, physical injury or death.*

**⃠ Avoid excessive cooling, and periodically perform ventilation to the unit.**
*Inadequate ventilation is a health hazard.*

**⃠ Do not touch the refrigerant piping during or after operation.**
*It can cause burns or frostbite.*

**⃠ Do not operate the unit with the panel(s) or protective cover(s) removed; keep fingers and clothing away from moving parts.**
*The rotating, hot, cold, and high-voltage parts of the unit can cause physical injury or death.*

**Periodically verify the equipment mounts have not deteriorated.**
*If the base collapses, the unit could fall and cause physical injury or death.*

**Periodically check power cord and plug for damage.**
*Cord must be replaced by the manufacturer, its service agent, or similar qualified persons in order to avoid physical injury and/or electric shock.*

**⃠ Do not open the inlet grille of the unit during operation. ⃠ Do not operate the unit with the panels or guards removed. ⃠ Do not insert hands or other objects through the inlet or outlet when the unit is plugged in. ⃠ Do not touch the electrostatic filter, if the unit includes one.**
*The unit contains sharp, rotating, hot, and high voltage parts that can cause personal injury and/or electric shock.*

**Securely attach the electrical part cover to the indoor unit and the service panel to the outdoor unit.**
*Non-secured covers can result in burns or electric shock due to dust or water in the service panel.*

### ⚠CAUTION

**⃠ To avoid physical injury, use caution when cleaning or servicing the air conditioner.**

***Note:***
**Clean up the site after installation is finished, and check that no metal scraps, screws, or bits of wiring have been left inside or surrounding the unit.**

**⃠ Do not use this equipment in mission critical or special-purpose applications such as preserving foods, works of art, wine coolers or refrigeration. The equipment is designed to provide comfort cooling and heating.**

**⃠ Do not block the inlet or outlet.**
*Unit will malfunction.*

**Securely attach the electrical part cover to the indoor unit and the service panel to the outdoor unit.**
*Non-secured covers can result in malfunction due to dust or water in the service panel.*

**Periodically verify the equipment mounts have not deteriorated.**
*If the base collapses, the unit could fall and cause property damage or product failure.*

**⃠ Do not allow water, dirt, or animals to enter the unit.**
*There is risk of unit failure.*



Due to our policy of continuous product innovation, some specifications may change without notification.
©LG Electronics U.S.A., Inc., Englewood Cliffs, NJ. All rights reserved. "LG" is a registered trademark of LG Corp.

# TABLE OF CONTENTS


**Safety Instructions ..... 3-6**

**General Data ..... 8-13**
*Unit Nomenclature ..... 8*
*Parts ..... 9*
*Specifications ..... 10-12*
*Electrical ..... 13*

**General Installation Guidelines ..... 14-25**
*Outdoor Unit Location Selection ..... 14-16*
*Required Outdoor Unit Clearances ..... 17*
*Rigging and Lifting / Outdoor Unit Mounting ..... 18-19*
*Indoor Unit Location Selection / Required Clearances ..... 20*
*Indoor Unit Mounting ..... 21-25*

**General Refrigerant Piping System Information ..... 26-35**
*Refrigerant Safety Standards ..... 26*
*Device Connection Limitations ..... 26*
*Selecting Field Supplied Piping ..... 27*
*Copper Expansion and Contraction ..... 28-29*
*Piping Materials and Handling ..... 30*
*Refrigerant System Engineering ..... 31-33*
*Flaring and Brazing Procedures ..... 34-35*

**Refrigerant Piping Connections ..... 36-46**
*Installation Overview ..... 36*
*Special Applications ..... 37*
*Outdoor Unit Connections ..... 38*
*Indoor Unit Connections ..... 39-41*
*Outdoor Unit Drain Piping / Indoor Unit Drain Hose ..... 42-44*
*Bundling ..... 44*
*Insulation ..... 45-46*

**Electrical System Installation ..... 47-56**
*Safety Guidelines ..... 47*
*Connections and Specifications ..... 48-51*
*Controller Options ..... 52*
*Indoor Unit Electrical Connections ..... 53-54*
*Outdoor Unit Electrical Connections ..... 55-56*

**Final Installation Procedures ..... 57-67**
*Triple Leak / Pressure Test ..... 57-58*
*Deep Evacuation Test ..... 58-59*
*Triple Evacuation Test ..... 59-60*
*Refrigerant Trim Charge, Finishing the Job ..... 61-62*
*Reattaching the Indoor Unit Bottom Cover ..... 63*
*Air Filter Disassembly and Assembly ..... 64*
*Installing Batteries, Test Run, Performance Evaluation ..... 65*
*Installer Mode, Cooling Only Mode ..... 66*
*Pump Down Procedure ..... 67*

**Troubleshooting ..... 68-72**
*LG SIMS - Self Diagnosis Functions ..... 68-69*
*Error Codes ..... 70-71*
*Refrigerant Leaks ..... 72*

**Installation Checklist ..... 73**



Due to our policy of continuous product innovation, some specifications may change without notification.
©LG Electronics U.S.A., Inc., Englewood Cliffs, NJ. All rights reserved. “LG” is a registered trademark of LG Corp.

# GENERAL DATA

## Unit Nomenclature

### Single Zone Wall Mount Indoor and Outdoor Units

| LS | N | 090 | HEV | 2 |
|---|---|---|---|---|

Family
LA= Art Cool Premier / Gallery / Mirror
LS= High Efficiency Wall Mount / Standard / Mega

Type
N = Indoor Wall Mount Unit
U = Outdoor Heat Pump Unit
No N or U = System

Nominal Capacity
(Nominal cooling capacity in Btu/h)
090 = 9,000
120 = 12,000
180 = 18,000
240 = 24,000
300/307 = 30,000
360 = 36,000

Indoor/Outdoor Product
HEV = Mega
HFV = Standard Efficiency
HXV = Mega 115V
HYV = Art Cool Premier
HVP = Art Cool Gallery
HSV = Art Cool Mirror, High Efficiency
HV = Standard
HLV = Extended Pipe

Generation or Revision
1 = First
2 = Second
3 = Third
4 = Fourth



Due to our policy of continuous product innovation, some specifications may change without notification.
©LG Electronics U.S.A., Inc., Englewood Cliffs, NJ. All rights reserved. "LG" is a registered trademark of LG Corp.

## Required Tools (field provided)

- Level
- Screwdriver
- Electrical lineman pliers
- Electric drill
- Hole saw
- Drill
- Flaring tool set
- Tubing cutter
- Tube/pipe reamer
- Torque wrenches
- Allen wrench
- Gas-leak detector
- Thermometer
- Measuring tape
- Multimeter
- Ammeter

## Required Parts (field provided)

- Connecting cable (power and control)
- Pipes - vapor line and liquid line, with insulation
- Insulated drain hose
- Additional drain hose

## Included Parts (Depends on Model)

| Part | Quantity | Image |
|---|---|---|
| Installation Plate | One (1) | Mega, Standard Efficiency 9,000 and 12,000 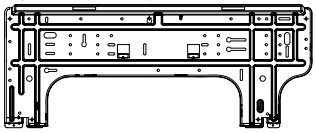 Mega, Standard Efficiency 18,000 and 24,000 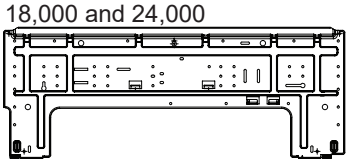 Mega 115V 9,000 and 12,000 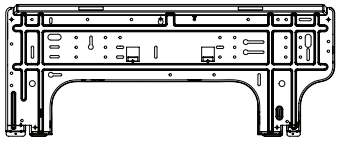 |
| Type “A” Screws | Five (5) | 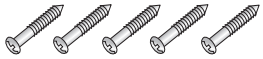 |
| Type “B” Screws | Two (2) | 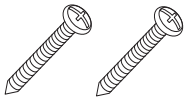 |
| Type “C” Screws | Two (2) | 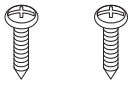 |
| Type “D” Screws | Two (2) | |
| Type “E” Screws | One (1) | |
| Bracket | One (1) | 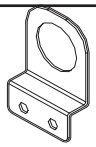 |
| Wireless Controller with Holder | One (1) | |




Due to our policy of continuous product innovation, some specifications may change without notification.
©LG Electronics U.S.A., Inc., Englewood Cliffs, NJ. All rights reserved. “LG” is a registered trademark of LG Corp.

# GENERAL DATA

## Specifications

Table 1: Single Zone Mega System Specifications.

| System Model Number (IDU/ODU) | LS090HEV2 (LSN090HEV2/ LSU090HEV2) | LS120HEV2 (LSN120HEV2/ LSU120HEV2) | LS180HEV2 (LSN180HEV2/ LSU180HEV2) | LS240HEV2 (LSN240HEV2/ LSU240HEV2) |
|---|---|---|---|---|
| Cooling Capacity (Min/Rated/Max) (Btu/h) | 3,070 ~ 9,000 ~10,330 | 3,070 ~ 12,000 ~ 13,780 | 3,685 ~ 18,000 ~ 18,493 | 3,685 ~ 22,000 ~ 24,000 |
| Cooling Power Input[1] (kW) | 0.72 | 1.142 | 1.5 | 2.0 |
| Heating Capacity (Min/Rated/Max) (Btu/h) | 3,070 ~ 10,900 ~ 12,520 | 3,070 ~ 12,000 ~ 13,780 | 3,685 ~ 19,000 ~ 22,997 | 3,685 ~ 22,000 ~25,260 |
| Heating Power Input[1] (kW) | 0.875 | 1.000 | 1.583 | 1.93 |
| COP | 12.46 | 12.00 | 12.00 | 11.40 |
| Max. Heating Capacity (Btu/h) Outdoor 17°F (WB) / Indoor 70°F (DB) | 8,760 (80%) | 9,640 (80%) | 15,270 (80%) | 17,680 (80%) |
| EER2 | 12.5 | 10.5 | 12 | 11 |
| SEER2 | 20 | 19 | 19 | 19 |
| HSPF2 | 9.2 | 9 | 9.4 | 8.8 |
| Power Supply (V/Hz/Ø) | 208-230 / 60 / 1 | | | |
| *Outdoor Unit Operating Range* | | | | |
| Cooling (°F DB) | 14 to 118 | | | |
| Heating (°F WB) | 14 to 65 | | | |
| *Indoor Unit Operating Range* | | | | |
| Cooling (°F WB) | 53 to 75 | | | |
| Heating (°F DB) | 60 to 86 | | | |
| *Indoor Temperature Setting Range* | | | | |
| Cooling (°F) | 64 to 86 | | | |
| Heating (°F) | 60 to 86 | | | |
| *Unit Data* | | | | |
| Refrigerant Type[2] | R410A | | | |
| Refrigerant Control | EEV | | | |
| IDU Sound Pressure[3] dB(A) (H/M/L/Sleep) | 42 / 36 / 28 / 21 | 42 / 36 / 28 / 21 | 48 / 43 / 38 / 32 | 48 / 43 / 38 / 32 |
| ODU Sound Pressure[3] dB(A) | 50 | 50 | 55 | 55 |
| *Unit Weight (lbs)* | | | | |
| IDU (Net / Shipping) | 19.2 / 25.4 | 19.2 / 25.4 | 26 / 30 | 26 / 30 |
| ODU (Net / Shipping) | 55.3 / 60 | 55.3 / 60 | 98.1 / 108 | 98.1 / 108 |
| Power/Communication Cable[4] (No. x AWG) | 4 x 14 | | | |
| *Compressor* | | | | |
| Compressor Type (Qty) | Twin Rotary (1) | | | |
| *Fan* | | | | |
| Indoor Unit Type (Qty) | Cross Flow (1) | | | |
| Outdoor Unit Type (Qty) | Propeller (1) | | | |
| Motor/Drive | Brushless Digital Controlled / Direct | | | |
| *Airflow Rate* | | | | |
| Indoor Unit Max/H/M/L (CFM) | 459 / 353 / 264 / 148 | 459 / 353 / 264 / 148 | 689 / 512 / 459 / 371 | 689 / 512 / 459 / 371 |
| Outdoor Unit (Max. [CFM]) | 953 | 953 | 1,730 | 1,730 |
| *Piping* | | | | |
| Liquid Line (in, OD) | 1/4 | 1/4 | 1/4 | 1/4 |
| Vapor Line (in, OD) | 3/8 | 3/8 | 1/2 | 1/2 |
| Condensation Line (OD, ID) | 27/32, 5/8 | 27/32, 5/8 | 27/32, 5/8 | 27/32, 5/8 |
| Additional Refrigerant Charge (oz/ft) | 0.22 | 0.22 | 0.26 | 0.26 |
| Pipe Length[5] (Minimum/Maximum)(ft) | 9.8 / 49.2 | 9.8 / 49.2 | 9.8 / 65.6 | 9.8 / 65.6 |
| Piping Length[5] (no add'l refrigerant, ft) | 24.6 | 24.6 | 24.6 | 24.6 |
| Max Elevation Difference (ft) | 23 | 23 | 32.8 | 32.8 |

EEV: Electronic Expansion Valve IDU: Indoor Unit ODU: Outdoor Unit

This unit comes with a dry helium charge.

This data is rated 0 ft above sea level with 24.6 of refrigerant line per indoor unit and a 0 ft level difference outdoor and indoor units.

Cooling capacity rating obtained with air entering the indoor unit at 80ºF dry bulb (DB) and 67ºF wet bulb (WB) and outdoor ambient conditions of 95ºF dry bulb (DB) and 75ºF wet bulb (WB).
Heating capacity rating obtained with air entering the indoor unit at 70ºF dry bulb (DB) and 59ºF wet bulb (WB) and outdoor ambient conditions of 47ºF dry bulb (DB) and 43ºF wet bulb (WB).

[1]Power Input is rated at high speed.

[2]Take appropriate actions at the end of HVAC equipment life to recover, recycle, reclaim or destroy R410A refrigerant according to applicable regulations (40 CFR Part 82, Subpart F) under section 608 of CAA.

[3]Sound Pressure levels are tested in an anechoic chamber under ISO Standard 3745.

[4]All communication / connection (power) cable from the outdoor unit to the indoor unit is field supplied and must be a minimum of four-conductor, 14 AWG, stranded, shielded or unshielded (if shielded, it must be grounded to the chassis of the outdoor unit only), and must comply with applicable local and national codes. For detailed electrical information, please see the Electrical Data section.

[5]Piping lengths are equivalent.



Due to our policy of continuous product innovation, some specifications may change without notification.
©LG Electronics U.S.A., Inc., Englewood Cliffs, NJ. All rights reserved. "LG" is a registered trademark of LG Corp.

Table 2: Single Zone Standard Efficiency System Specifications.

| System Model Number (IDU/ODU) | LS090HFV3 (LSN090HFV3 / LSU090HFV3) | LS120HFV3 (LSN120HFV3 / LSU120HFV3) | LS180HFV3 (LSN180HFV3 / LSU180HFV3) | LS240HFV3 (LSN240HFV3 / LSU240HFV3) |
|---|---|---|---|---|
| Cooling Capacity (Min/Rated/Max) (Btu/h) | 3,070 ~ 9,000 ~10,330 | 3,070 ~ 12,000 ~ 13,780 | 3,685 ~ 18,000 ~ 18,493 | 3,685 ~ 22,000 ~ 24,000 |
| Cooling Power Input[1] (kW) | 0.82 | 1.25 | 1.65 | 2.2 |
| Heating Capacity (Min/Rated/Max) (Btu/h) | 3,070 ~ 10,900 ~ 12,520 | 3,070 ~ 12,000 ~ 13,780 | 3,685 ~ 19,000 ~ 22,997 | 3,685 ~ 22,000 ~25,260 |
| Heating Power Input[1] (kW) | 0.95 | 1.05 | 1.74 | 2.02 |
| COP | 11.47 | 11.43 | 10.92 | 10.86 |
| Max. Heating Capacity (Btu/h) Outdoor 17°F (WB) / Indoor 70°F (DB) | 8,760 (80%) | 9,640 (80%) | 15,270 (80%) | 17,680 (80%) |
| EER2 | 12.5 | 10.5 | 12 | 11 |
| SEER2 | 17 | 17 | 17 | 17 |
| HSPF2 | 8.7 | 8.5 | 8.9 | 8.3 |
| Power Supply (V/Hz/Ø) | 208-230 / 60 / 1 | | | |
| *Outdoor Unit Operating Range* | | | | |
| Cooling (°F DB) | 14 to 118 | | | |
| Heating (°F WB) | 14 to 65 | | | |
| *Indoor Unit Operating Range* | | | | |
| Cooling (°F WB) | 53 to 75 | | | |
| Heating (°F DB) | 60 to 86 | | | |
| *Indoor Temperature Setting Range* | | | | |
| Cooling (°F) | 64 to 86 | | | |
| Heating (°F) | 60 to 86 | | | |
| *Unit Data* | | | | |
| Refrigerant Type[2] | R410A | | | |
| Refrigerant Control | EEV | | | |
| IDU Sound Pressure[3] dB(A) (H/M/L/Sleep) | 42 / 36 / 28 / 21 | 42 / 36 / 28 / 21 | 48 / 43 / 38 / 32 | 48 / 43 / 38 / 32 |
| ODU Sound Pressure[3] dB(A) | 50 | 50 | 55 | 55 |
| *Unit Weight (lbs)* | | | | |
| IDU (Net / Shipping) | 19.2 / 25.4 | 19.2 / 25.4 | 26 / 30 | 26 / 30 |
| ODU (Net / Shipping) | 55.3 / 60 | 55.3 / 60 | 98.1 / 108 | 98.1 / 108 |
| Power/Communication Cable[4] (No.x AWG) | 4 x 14 | | | |
| *Compressor* | | | | |
| Compressor Type (Qty) | Twin Rotary (1) | | | |
| *Fan* | | | | |
| Indoor Unit Type (Qty) | Cross Flow (1) | | | |
| Outdoor Unit Type (Qty) | Propeller (1) | | | |
| Motor/Drive | Brushless Digital Controlled / Direct | | | |
| *Airflow Rate* | | | | |
| Indoor Unit Max/H/M/L (CFM) | 459 / 353 / 264 / 148 | 459 / 353 / 264 / 148 | 689 / 512 / 459 / 371 | 689 / 512 / 459 / 371 |
| Outdoor Unit (Max. [CFM]) | 953 | 953 | 1,730 | 1,730 |
| *Piping* | | | | |
| Liquid Line (in, OD) | 1/4 | 1/4 | 1/4 | 1/4 |
| Vapor Line (in, OD) | 3/8 | 3/8 | 1/2 | 1/2 |
| Condensation Line (OD, ID) | 27/32, 5/8 | 27/32, 5/8 | 27/32, 5/8 | 27/32, 5/8 |
| Additional Refrigerant Charge (oz/ft) | 0.22 | 0.22 | 0.26 | 0.26 |
| Pipe Length[5] (Minimum/Maximum)(ft) | 9.8 / 49.2 | 9.8 / 49.2 | 9.8 / 65.6 | 9.8 / 65.6 |
| Piping Length[5] (no add'l refrigerant, ft) | 24.6 | 24.6 | 24.6 | 24.6 |
| Max Elevation Difference (ft) | 23 | 23 | 32.8 | 32.8 |

EEV: Electronic Expansion Valve IDU: Indoor Unit ODU: Outdoor Unit

This unit comes with a dry helium charge.

This data is rated 0 ft above sea level with 24.6 of refrigerant line per indoor unit and a 0 ft level difference outdoor and indoor units.

Cooling capacity rating obtained with air entering the indoor unit at 80ºF dry bulb (DB) and 67ºF wet bulb (WB) and outdoor ambient conditions of 95ºF dry bulb (DB) and 75ºF wet bulb (WB).
Heating capacity rating obtained with air entering the indoor unit at 70ºF dry bulb (DB) and 59ºF wet bulb (WB) and outdoor ambient conditions of 47ºF dry bulb (DB) and 43ºF wet bulb (WB).

[1]Power Input is rated at high speed.

[2]Take appropriate actions at the end of HVAC equipment life to recover, recycle, reclaim or destroy R410A refrigerant according to applicable regulations (40 CFR Part 82, Subpart F) under section 608 of CAA.

[3]Sound Pressure levels are tested in an anechoic chamber under ISO Standard 3745.

[4]All communication / connection (power) cable from the outdoor unit to the indoor unit is field supplied and must be a minimum of four-conductor, 14 AWG, stranded, shielded or unshielded (if shielded, it must be grounded to the chassis of the outdoor unit only), and must comply with applicable local and national codes. For detailed electrical information, please see the Electrical Data section.

[5]Piping lengths are equivalent.





Due to our policy of continuous product innovation, some specifications may change without notification.
©LG Electronics U.S.A., Inc., Englewood Cliffs, NJ. All rights reserved. "LG" is a registered trademark of LG Corp.

# GENERAL DATA

## Specifications

Table 3: Single Zone Mega 115V System Specifications.

| System Model Number (IDU/ODU) | LS090HXV2 (LSN090HXV2/LSU090HXV2) | LS120HXV2 (LSN120HXV2/LSU120HXV2) |
|---|---|---|
| Cooling Capacity (Min/Rated/Max) (Btu/h) | 3,070 ~ 9,000 ~ 10,330 | 3,070 ~ 12,000 ~ 13,780 |
| Cooling Power Input[1] (kW) | 0.732 | 1.142 |
| Heating Capacity (Min/Rated/Max) (Btu/h) | 3,070 ~ 10,900 ~ 12,520 | 3,070 ~ 12,000 ~ 13,780 |
| Heating Power Input[1] (kW) | 0.875 | 1.000 |
| COP | 3.65 | 3.52 |
| EER2 | 12.3 | 10.5 |
| SEER2 | 20 | 19 |
| HSPF2 | 9.2 | 9 |
| Power Supply (V/Hz/Ø) | 115 / 60 / 1 | |
| *Outdoor Unit Operating Range* | | |
| Cooling (°F DB) | 14 to 118 | |
| Heating (°F WB) | 14 to 65 | |
| *Indoor Unit Operating Range* | | |
| Cooling (°F WB) | 53 to 75 | |
| Heating (°F DB) | 60 to 86 | |
| *Indoor Temperature Setting Range* | | |
| Cooling (°F) | 65 to 86 | |
| Heating (°F) | 60 to 86 | |
| *Unit Data* | | |
| Refrigerant Type[2] | R410A | |
| Refrigerant Control | EEV | |
| IDU Sound Pressure[3] dB(A) (H/M/L/Sleep) | 42 / 36 / 28 / 21 | 42 / 36 / 28 / 21 |
| ODU Sound Pressure[3] dB(A) | 50 | 50 |
| *Unit Weight (lbs)* | | |
| IDU (Net/Shipping) | 19.2 / 22 | 19.2 / 22 |
| ODU (Net/Shipping) | 58.4 / 60 | 58.4 / 60 |
| Power/Communication Cable[4] (No. x AWG) | 4 x 14 | |
| *Compressor* | | |
| Compressor Type (Qty) | Twin Rotary (1) | Twin Rotary (1) |
| *Fan* | | |
| IDU Type (Qty) | Cross Flow (1) | |
| ODU Type (Qty) | Propeller (1) | |
| Motor/Drive | Brushless Digitally Controlled / Direct | |
| *Airflow Rate* | | |
| IDU Max/H/M/L (CFM) | 459 / 353 / 264 / 148 | 459 / 353 / 264 / 148 |
| ODU Max (CFM) | 953 | 953 |
| *Piping* | | |
| Liquid Line (in, OD) | 1/4 | 1/4 |
| Vapor Line (in, OD) | 3/8 | 3/8 |
| Condensation Line (OD, ID) | 27/32, 5/8 | 27/32, 5/8 |
| Additional Refrigerant Charge (oz/ft) | 0.22 | 0.22 |
| Pipe Length[5] (Minimum/Maximum)(ft) | 9.8 / 49.2 | 9.8 / 49.2 |
| Piping Length[5] (no add'l refrigerant, ft) | 24.6 | 24.6 |
| Max Elevation Difference (ft) | 23 | 23 |

EEV: Electronic Expansion Valve IDU: Indoor Unit ODU: Outdoor Unit

This unit comes with a dry helium charge.

This data is rated 0 ft above sea level with 24.6 of refrigerant line per indoor unit and a 0 ft level difference outdoor and indoor units.

Cooling capacity rating obtained with air entering the indoor unit at 80ºF dry bulb (DB) and 67ºF wet bulb (WB) and outdoor ambient conditions of 95ºF dry bulb (DB) and 75ºF wet bulb (WB).
Heating capacity rating obtained with air entering the indoor unit at 70ºF dry bulb (DB) and 59ºF wet bulb (WB) and outdoor ambient conditions of 47ºF dry bulb (DB) and 43ºF wet bulb (WB).

[1]Power Input is rated at high speed.

[2]Take appropriate actions at the end of HVAC equipment life to recover, recycle, reclaim or destroy R410A refrigerant according to applicable regulations (40 CFR Part 82, Subpart F) under section 608 of CAA.

[3]Sound Pressure levels are tested in an anechoic chamber under ISO Standard 3745.

[4]All communication / connection (power) cable from the outdoor unit to the indoor unit is field supplied and must be a minimum of four-conductor, 14 AWG, stranded, shielded or unshielded (if shielded, it must be grounded to the chassis of the outdoor unit only), and must comply with applicable local and national codes. For detailed electrical information, please see the Electrical Data section.

[5]Piping lengths are equivalent.



Due to our policy of continuous product innovation, some specifications may change without notification.
©LG Electronics U.S.A., Inc., Englewood Cliffs, NJ. All rights reserved. "LG" is a registered trademark of LG Corp.

## Electrical Data for Mega, Standard Efficiency Models

Table 5: 208-230V, 60Hz, 1-Phase Single Zone Mega, Standard Efficiency System Electrical Data Table.

| Nominal Tons | Unit Model No. | Hertz | Voltage | Voltage Range (Min. to Max.) | MCA | MOP | Compressor Quantity | Compressor Motor RLA | | Outdoor Fan Motor | | Indoor Fan Motor | |
|---|---|---|---|---|---|---|---|---|---|---|---|---|---|
| | | | | | | | | Cooling | Heating | W | FLA | W | FLA |
| 3/4 | LS090HEV2 | 60 | 208 - 230 | 187-253 | 10.0 | 15 | 1 | 7.0 | 7.0 | 43 | 0.4 | 30 | 0.4 |
| 1 | LS120HEV2 | | | | 10.0 | 15 | 1 | 7.0 | 7.0 | 43 | 0.4 | 30 | 0.4 |
| 1-1/2 | LS180HEV2 | | | | 15.0 | 20 | 1 | 10.0 | 10.0 | 85 | 0.4 | 58 | 0.4 |
| 2 | LS240HEV2 | | | | 15.0 | 20 | 1 | 10.0 | 10.0 | 85 | 0.4 | 58 | 0.4 |
| 3/4 | LS090HFV3 | | | | 10.0 | 15 | 1 | 7.0 | 7.0 | 43 | 0.4 | 30 | 0.4 |
| 1 | LS120HFV3 | | | | 10.0 | 15 | 1 | 7.0 | 7.0 | 43 | 0.4 | 30 | 0.4 |
| 1-1/2 | LS180HFV3 | | | | 15.0 | 20 | 1 | 10.0 | 10.0 | 85 | 0.4 | 58 | 0.4 |
| 2 | LS240HFV3 | | | | 15.0 | 20 | 1 | 10.0 | 10.0 | 85 | 0.4 | 58 | 0.4 |

Voltage tolerance is ±10%.
Maximum allowable voltage unbalance is 2%.
MCA = Minimum Circuit Ampacity.

Maximum Overcurrent Protection (MOP) is calculated as follows: (Largest motor FLA x 2.25) + (Sum of other motor FLA) rounded down to the nearest standard fuse size.
RLA = Rated Load Amps.
FLA = Full Load Amps.

## Electrical Data for Mega 115V Models

Table 4: 115V, 60Hz, 1-Phase Single Zone Mega 115V System Electrical Data Table.

| Nominal Tons | Unit Model No. | Hertz | Voltage | Voltage Range (Min. to Max.) | MCA | MOP | Compressor Quantity | Compressor Motor RLA | | Outdoor Fan Motor | | Indoor Fan Motor | |
|---|---|---|---|---|---|---|---|---|---|---|---|---|---|
| | | | | | | | | Cooling | Heating | W | FLA | W | FLA |
| 3/4 | LS090HXV2 | 60 | 115 | 98-132 | 15 | 25 | 1 | 11.0 | 11.0 | 43 | 0.4 | 30 | 0.4 |
| 1 | LS120HXV2 | | | | 15 | 25 | 1 | 11.0 | 11.0 | 43 | 0.4 | 30 | 0.4 |

Voltage tolerance is ±10%.
Maximum allowable voltage unbalance is 2%.
MCA = Minimum Circuit Ampacity.

Maximum Overcurrent Protection (MOP) is calculated as follows: (Largest motor FLA x 2.25) + (Sum of other motor FLA) rounded down to the nearest standard fuse size.
RLA = Rated Load Amps.
FLA = Full Load Amps.




Due to our policy of continuous product innovation, some specifications may change without notification.
©LG Electronics U.S.A., Inc., Englewood Cliffs, NJ. All rights reserved. "LG" is a registered trademark of LG Corp.

# GENERAL INSTALLATION GUIDELINES

Outdoor Unit Location Selection

## Selecting the Best Location for the Outdoor Unit

**⚠DANGER**

- *Do not install the unit in an area where combustible gas will generate, flow, stagnate, or leak. These conditions can cause a fire, resulting in bodily injury or death.*
- *Do not install the unit in a location where acidic solution and spray (sulfur) are often used as it can cause bodily injury or death.*
- *Do not use the unit in environments where oil, steam, or sulfuric gas are present as it can cause bodily injury or death.*

**⚠CAUTION**

*When deciding on a location to place the outdoor unit, be sure to choose an area where run-off water from defrost cycle will not accumulate and freeze on sidewalks or driveways, which will create unsafe conditions. Properly install and insulate any drain hoses to prevent the hose from freezing, cracking, leaking, and causing unsafe conditions from frozen condensate.*

**⚠WARNING**

*Install a fence to prevent vermin from crawling into the unit or unauthorized individuals from accessing it. Vermin and unauthorized individuals will cause a fire, electric shock, physical injury or death. Follow the placement guidelines set forth in "Clearance Requirements".*

***Note:***

*Install a fence to prevent vermin from crawling into the unit or unauthorized individuals from accessing it. Vermin and unauthorized individuals will damage the unit. Follow the placement guidelines set forth in "Clearance Requirements".*

Select a location for installing the outdoor unit that will meet the following conditions:

- Where there is enough structural strength to bear the weight of the unit.
- A location that allows for optimum air flow and is easily accessible for inspection, maintenance, and service.
- Where piping between the outdoor unit and indoor unit is within allowable limits.
- Include space for drainage to ensure condensate flows properly out of the unit when it is in heating mode. Avoid placing the outdoor unit in a low-lying area where water could accumulate.
- If the outdoor unit is installed in a highly humid environment (near an ocean, lake, etc.), ensure that the site is well-ventilated and has a lot of natural light (Example: Install on a rooftop).

**Do Not's**

- *Where it will be subjected to direct thermal radiation from other heat sources, or an area that would expose the outdoor unit to heat or steam like discharge from boiler stacks, chimneys, steam relief ports, other air conditioning units, kitchen vents, plumbing vents, and other sources of extreme temperatures.*
- *Where high-frequency electrical noise / electromagnetic waves will affect operation.*
- *Where operating sound from the unit will disturb inhabitants of surrounding buildings.*
- *Where the unit will be exposed to direct, strong winds.*
- *Where the discharge of one outdoor unit will blow into the inlet side of an adjacent unit (when installing multiple outdoor units).*

## Planning for Snow and Ice

To ensure the outdoor unit operates properly, certain measures are required in locations where there is a possibility of heavy snowfall or severe windchill or cold:

1. Prepare for severe winter wind chills and heavy snowfall, even in areas of the country where these are unusual phenomena.
2. Position the outdoor unit so that its airflow fans are not buried by direct, heavy snowfall. If snow piles up and blocks the airflow, the system will malfunction.
3. Remove any snow that has accumulated four (4) inches or more on the top of the outdoor unit.
4. In climates that can experience significant snow buildup, mount the outdoor unit on a raised, field-provided platform or stand. The raised support platform must be high enough to allow the unit to remain above possible snow drifts, and must be higher than the maximum anticipated snowfall for the location.
5. Design the mounting base to prevent snow accumulation on the platform in front or back of the unit frame.
6. Provide a field fabricated snow protection hood to keep snow and ice and/or drifting snow from accumulating on the coil surfaces.
7. To prevent snow and heavy rain from entering the outdoor unit, install the condenser air inlets and outlets facing away from direct winds.
8. Consider tie-down requirements in case of high winds or where required by local codes.



Due to our policy of continuous product innovation, some specifications may change without notification.
©LG Electronics U.S.A., Inc., Englewood Cliffs, NJ. All rights reserved. "LG" is a registered trademark of LG Corp.

**Planning for Snow and Ice, continued.**

**⚠CAUTION**

*When deciding on a location to place the outdoor unit, be sure to choose an area where run-off water from defrost cycle will not accumulate and freeze on sidewalks or driveways, which will create unsafe conditions. Properly install and insulate any drain hoses to prevent the hose from freezing, cracking, leaking, and causing unsafe conditions from frozen condensate.*

## *Note:*

*Choose an area where run-off water from defrost cycle will not accumulate and freeze on sidewalks or driveways. Properly install and insulate any drain hoses to prevent the hose from freezing, cracking, leaking, and damaging the outdoor unit.*

## *Note:*

*The indoor unit will take longer to provide heat, or heating performance will be reduced in winter if the unit is installed:*

1. *In a narrow, shady location.*
2. *Near a location that has a lot of ground moisture.*
3. *In a highly humid environment.*
4. *In an area in which condensate does not drain properly.*

## Tie-Downs and Lightning Protection

### Tie-Downs

- The strength of the roof must be checked before installing the outdoor units.
- If the installation site is prone to high winds or earthquakes, when installing on the wall or roof, securely anchor the mounting base using a field-provided tie-down configuration approved by a local professional engineer.
- The overall tie-down configuration must be approved by a local professional engineer.

## *Note:*

*Always refer to local code when using a wind restraint system.*

### Lightning Protection

- To protect the outdoor unit from lightning, it must be placed within the specified lightning safety zone.

Figure 1: Lightning Protection Diagram.

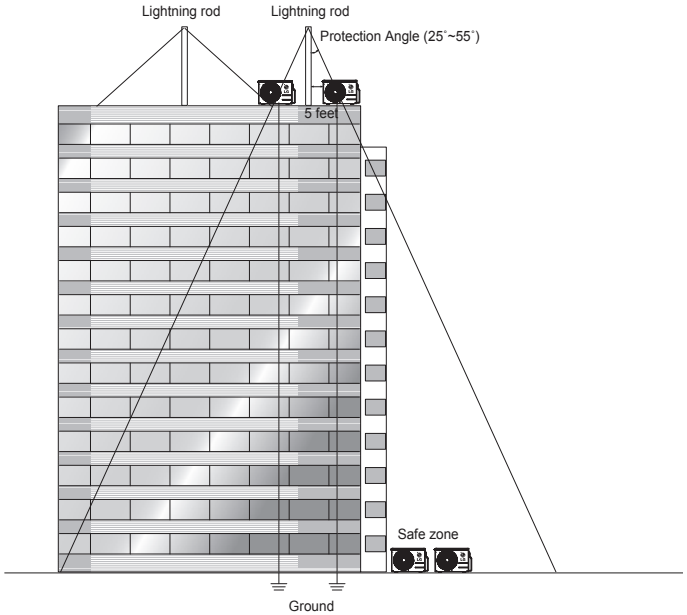


Table 6: Safety Zone Specifications.

| Building Height (feet) | 66 | 98 | 148 | 197 |
|---|---|---|---|---|
| Protection Angle (˚) | 55 | 45 | 35 | 25 |

- Power cable and communication cable must be installed five (5) feet away from lightning rod.
- A high-resistance ground system must be included to protect against induced lightning or indirect strike.

## *Note:*

*If the building does not include lightning protection, the outdoor unit will be damaged from a lightning strike. Inform the customer of this possibility in advance.*





Due to our policy of continuous product innovation, some specifications may change without notification.
©LG Electronics U.S.A., Inc., Englewood Cliffs, NJ. All rights reserved. "LG" is a registered trademark of LG Corp.

# GENERAL INSTALLATION GUIDELINES

## Outdoor Unit Location Selection

### Oceanside Applications

**Use of a Windbreak to Shield from Sea Wind**

***Note:***

*Ocean winds will cause corrosion, particularly on the condenser and evaporator fins, which, in turn could cause product malfunction or inefficient performance.*

- ⃠ Avoid installing the outdoor unit where it would be directly exposed to ocean winds.
- Install the outdoor unit on the side of the building opposite from direct ocean winds.
- Select a location with good drainage.
- Periodically clean dust or salt particles off of the heat exchanger with water.
- If the outdoor unit must be placed in a location where it would be subjected to direct ocean winds, install a concrete windbreak strong enough to block any winds.
- Windbreak must be more than 150% of the outdoor unit's height. There must be 2 to 3-1/2 inches of clearance between the outdoor unit and the windbreaker for purposes of air flow.

***Note:***

*Additional anti-corrosion treatment will need to be applied to the outdoor unit at oceanside locations.*

**Use of a Building to Shield from Sea Wind**

If a windbreak is not possible, a building or larger structure must be used to shield the outdoor unit from direct exposure to the sea wind. The unit must be placed on the side of the building directly opposite to the direction of the wind as shown at right.

Figure 2: Oceanside Placement Using Windbreak.

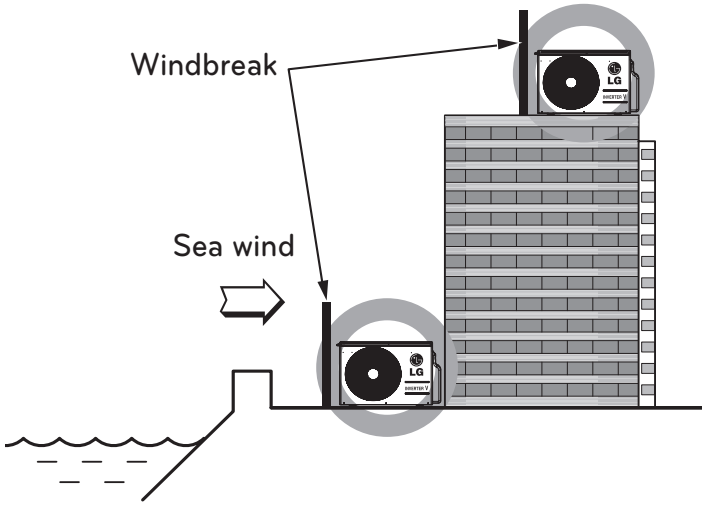


Figure 3: Placement Using Building as Shield.

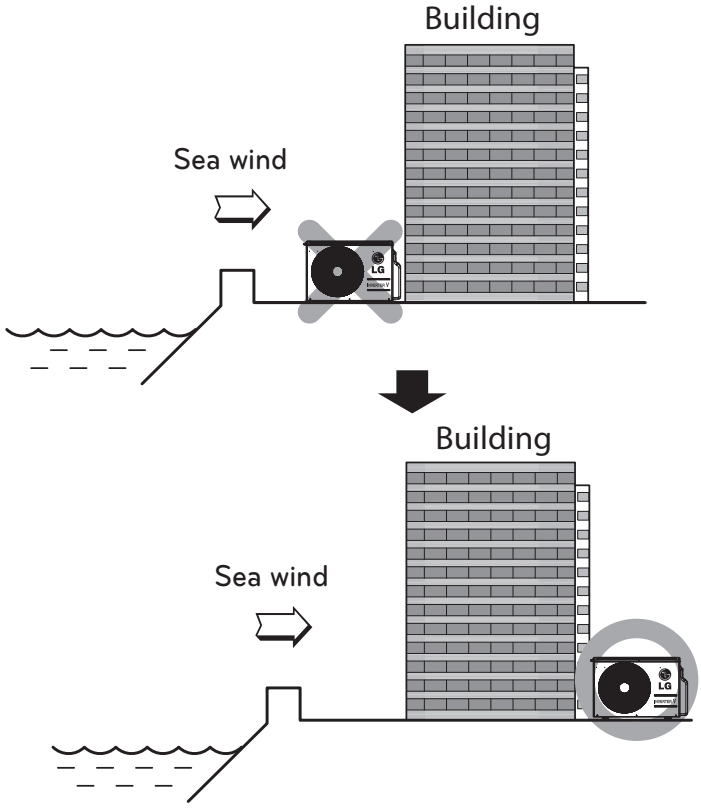




Due to our policy of continuous product innovation, some specifications may change without notification.
©LG Electronics U.S.A., Inc., Englewood Cliffs, NJ. All rights reserved. "LG" is a registered trademark of LG Corp.

## Minimum Allowable Clearance and Service Access Requirements

Proper clearance for the outdoor unit coil is critical for proper operation. When installing the outdoor unit, consider service, inlet and outlet, and minimum allowable space requirements as illustrated in the diagrams below.

- Include enough space for airflow and for service access. If installing multiple outdoor units, ⃠ avoid placing the units where the discharge of one unit will blow into the inlet side of an adjacent unit.
- If an awning is built over the unit to prevent direct sunlight or rain exposure, make sure that the discharge air of the outdoor unit isn't restricted.
- ⃠ No obstacles to air circulation around the unit; keep proper distances from ceilings, fences, floor, walls, etc. (Install a fence to prevent pests from damaging the unit or unauthorized individuals from accessing it.)

### Mega, Standard Efficiency, and Mega 115V Outdoor Unit Service Access and Allowable Clearances

Specific clearance requirements in the diagram below are for all outdoor units. The figure below shows the overall minimum clearances that must be observed for safe operation and adequate airflow around the outdoor unit.

When placing the outdoor unit under an overhang, awning, sunroof or other "roof-like structure", observe the clearance requirements (as shown in Cases 1 and 2) for height in relation to the unit. To have successful service access to the outdoor unit, see the figure below for minimum spacing. When installing multiple outdoor units, see Cases 4 and 5 for correct spacing requirements.

***Note:***

*If the outdoor unit is installed between standard and minimum clearances, capacity decreases approximately 10%.*

Figure 4: Single Zone Mega, Standard Efficiency, and Mega 115V Outdoor Unit Service Access and Allowable Clearances Diagram.

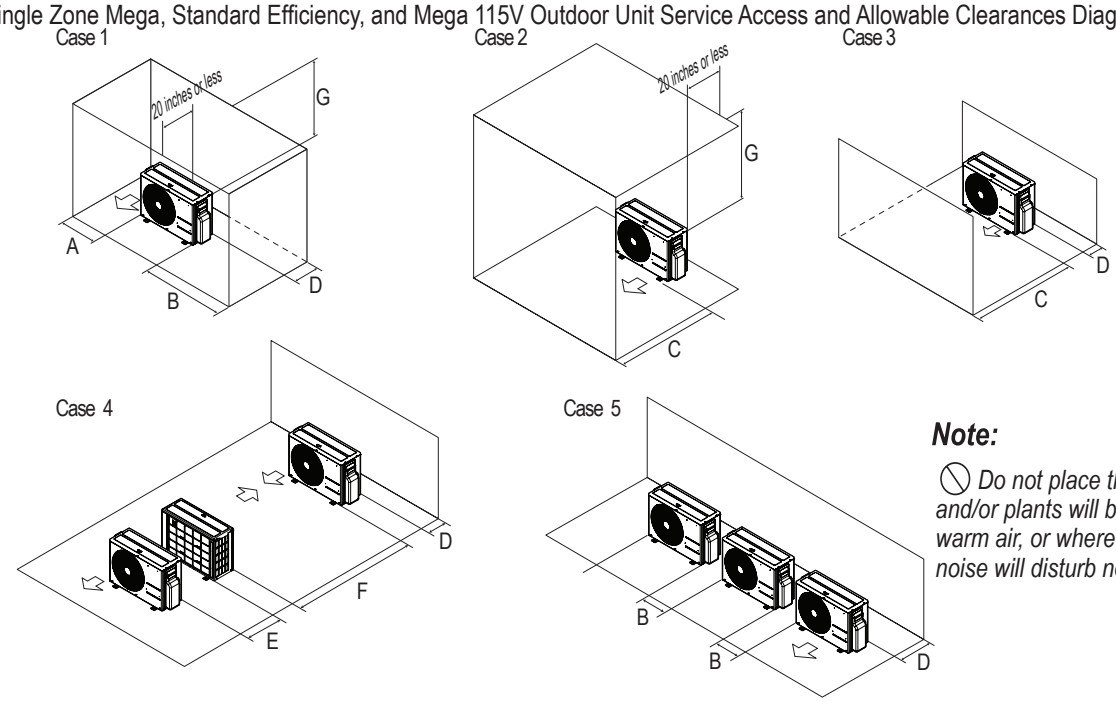


***Note:***

⃠ *Do not place the unit where animals and/or plants will be in the path of the warm air, or where the warm air and/or noise will disturb neighbors.*

Table 7: Single Zone Mega, Standard Efficiency, and Mega 115V Outdoor Unit Service Access and Allowable Clearances Diagram Legend.

| Unit: Inch | | A | B | C | D | E | F | G |
|---|---|---|---|---|---|---|---|---|
| Case 1 | Standard | 12 | 24 | - | 12 | - | - | - |
| | Minimum | 4 | 10 | - | 4 | - | - | 40 |
| Case 2 | Standard | - | - | 20 | - | - | - | - |
| | Minimum | - | - | 14 | - | - | - | 40 |
| Case 3 | Standard | - | - | 20 | 12 | - | - | - |
| | Minimum | - | - | 14 | 4 | - | - | - |
| Case 4 | Standard | - | - | - | 12 | 24 | - | - |
| | Minimum | - | - | - | 4 | 8 | 79 | - |
| Case 5 | Standard | - | 24 | - | 12 | - | - | - |
| | Minimum | - | 10 | - | 4 | - | - | - |



Due to our policy of continuous product innovation, some specifications may change without notification.
©LG Electronics U.S.A., Inc., Englewood Cliffs, NJ. All rights reserved. "LG" is a registered trademark of LG Corp.

# GENERAL INSTALLATION GUIDELINES

Rigging and Lifting / Outdoor Unit Mounting

## Rigging and Lifting Instructions

**⚠WARNING**

**Wear protective gloves and safety goggles when handling equipment. Sharp edges will cause personal injury.**

**Dispose of the packing materials safely.**

- *Packing materials, such as nails and other metal or wooden parts, will cause puncture wounds or other injuries.*
- *Tear apart and throw away plastic packaging bags so that children do not play with them and risk suffocation and death.*

**⚠CAUTION**

- *Be very careful when transporting the product. There is a risk of the product falling and causing physical injury.*
- *Use appropriate moving equipment to transport each frame; ensure the equipment is capable of supporting the weights listed.*
- *Some products use polypropylene bands for packaging. ⃠ Do not use polypropylene bands to lift the unit.*
- *Support the outdoor unit at a minimum of four points to avoid slippage from rigging apparatus.*

### *Note:*

- *Make sure the outdoor unit is in its original packaging to avoid damage during local transport.*
- *At the time of delivery, the package must be checked for any damage (exterior and interior). Report any damage to the carrier claims agent immediately.*
- *Handle the outdoor unit with care. Keep the outdoor unit upright to avoid damaging inside components.*
- *If a forklift is to transport the outdoor unit, the forklift arms must pass through the openings at the bottom.*
- *If a crane is to suspend the outdoor unit, it is required that two (2) ropes at least twenty-three (23) feet in length be used. Pass the ropes under the unit. Pass the rope through the two (2) forklift slots each at the front and rear of the outdoor unit.*
- *To prevent damage to the outdoor unit, always lift the unit with the ropes attached at four (4) points at an angle of ≤40°.*
- *Always include padding to protect the outdoor unit from rope damage, and take into consideration the outdoor unit's center of gravity.*

## General Outdoor Unit Mounting

Any underlying structure or foundation must be designed to support the weight of the outdoor unit. ⃠ Avoid placing the unit in a low lying area where water and ice will accumulate. Securely attach the outdoor unit to a condenser pad, base rails, or a mounting platform that is solidly anchored to the ground or building structure. When installing the outdoor unit on the wall or roof top, securely anchor the mounting base to account for wind, earthquakes, or vibration.

### Anchoring the Outdoor Unit

- Tightly anchor the outdoor unit with a bolt and nut to a concrete or rigid platform (see next page for more details).
- When installing on a wall (with field-supplied brackets), roof, or rooftop, securely anchor the mounting platform with nails, taking into consideration the possibility of strong winds or earthquakes.
- If there is a possibility of vibration from the outdoor unit transmitting to the building, add an anti-vibration material.

Figure 5: Examples of Outdoor Unit Mounting Methods.

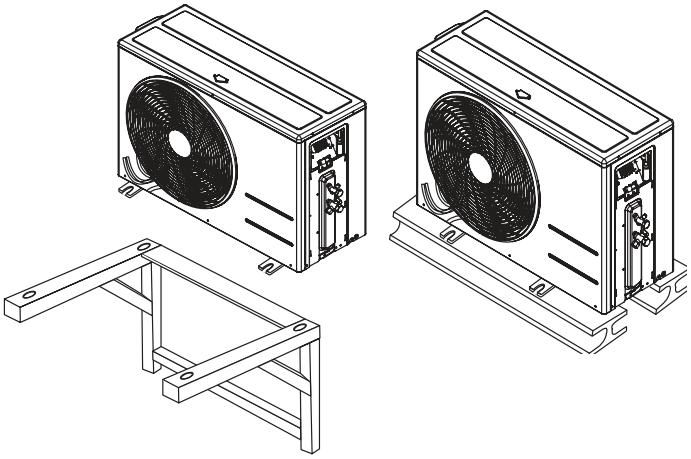

### *Note:*

*Follow applicable local codes for clearance, mounting, anchor and vibration attenuation requirements.*



Due to our policy of continuous product innovation, some specifications may change without notification.
©LG Electronics U.S.A., Inc., Englewood Cliffs, NJ. All rights reserved. "LG" is a registered trademark of LG Corp.

### Concrete Platform Specifications

- Concrete foundations must be made of one part cement, two parts sand, and four parts gravel.
- The surface of the foundation must be finished with mortar with rounded edges, and weatherproofed.

Figure 6: Example of Using an Insert for a Hole in a Reinforced Concrete Beam.

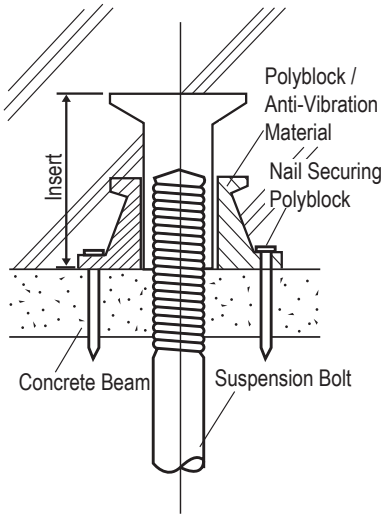


Figure 7: Close up of Bolt Attachment.

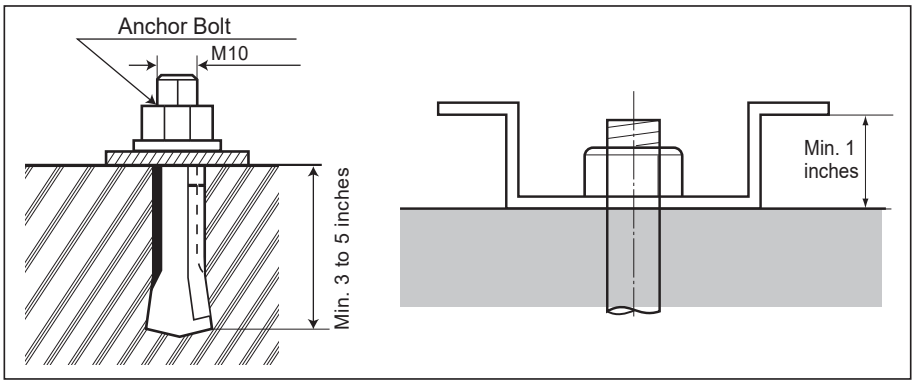


### Outdoor Unit Platform Dimensional Requirements

Figure 8: Single Zone Mega, Standard Efficiency, and Mega 115V Wall Mount Outdoor Units (Appearances Will Vary Depending on Model).

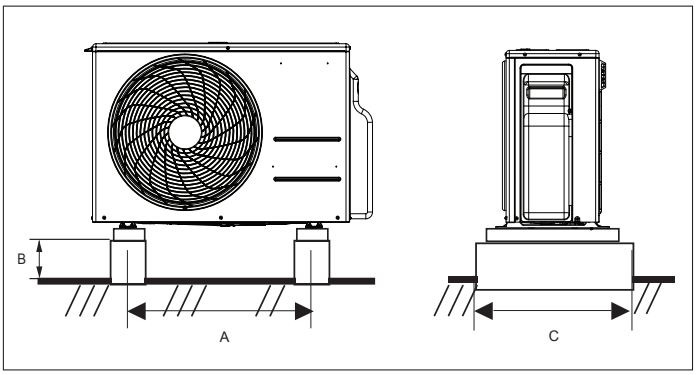


Table 8: Mega , Standard Efficiency, and Mega 115V Outdoor Unit Foundation Specifications.

| Model | Foundation (Inches) | | | Leg Thickness (Inches) |
|---|---|---|---|---|
| | A | B | C | |
| LSU090HEV2, LSU120HEV2, LSU090HFV3, LSU120HFV3; LSU090HXV2, LSU120HXV2 | 18-7/32 | Minimum 4 | 11-1/32 | 1/16 |
| LSU180HEV2, LSU180HFV3, LSU240HEV2, LSU240HFV3 | 23-1/16 | Minimum 4 | 15-3/4 | 1/16 |

## *Note:*

*Review the specifications for field-supplied pad mounts or brackets to verify that outdoor dimension requirements are met.*

### Bolting the Outdoor Unit to the Platform

1. Ensure that the concrete platform will not degrade easily, and has enough structural strength to bear the weight of the unit.
2. Include an H-beam support. Firmly attach the corners, otherwise the support will bend.
3. Use a hexagon nut.
4. Use anti-vibration material.
5. Include enough space around the concrete foundation for condensate drainage.
6. Seal all wiring and piping access holes to prevent insects from entering the unit.

Figure 9: Bolting the Outdoor Unit to the Platform (Piping Location Will Differ Depending on Outdoor Unit Model).

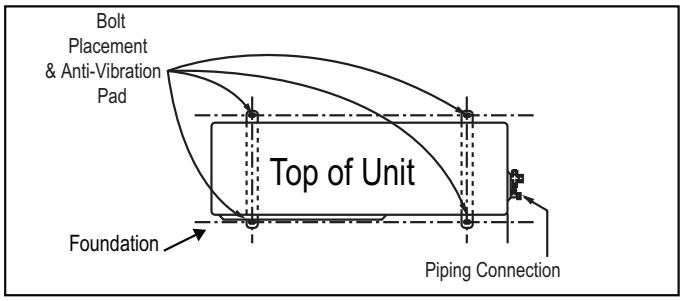


## *Note:*

*All referenced materials are to be field-supplied. Images are not to scale.*



Due to our policy of continuous product innovation, some specifications may change without notification.
©LG Electronics U.S.A., Inc., Englewood Cliffs, NJ. All rights reserved. "LG" is a registered trademark of LG Corp.

# GENERAL INSTALLATION GUIDELINES

Indoor Unit Location Selection / Required Indoor Unit Clearances

## Selecting the Best Location for the Indoor Unit

***Note:***

*Follow recommended best practices when choosing an indoor location for the single zone indoor unit.*

Figure 10: Indoor Unit Clearance Requirements.

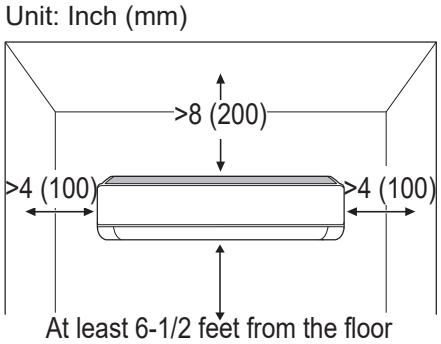


### Dos

- Follow the table at right for minimum clearance of indoor unit from the top of the unit to the ceiling.
- Clearance gap between any wall or enclosure and the left or right side of the unit must be greater than 4 inches. Ensure there is sufficient maintenance space.
- Unit must be at least 6-1/2 feet from the floor for adequate clearance.
- Place the unit where drainage can be obtained easily. Condensation drain must be conveniently routed away from the unit.
- Locate the indoor unit in a location where it can be easily connected to the outdoor unit within allowable limits.
- Use a metal detector to locate studs in the walls. Anchor unit following stud location to prevent damage to the wall.

Table 9: Indoor Unit Ceiling Clearance.

| Ceiling Clearance (inches) | Indoor Unit Model(s) |
|---|---|
| 8 | LSN090HEV2, LSN120HEV2, LSN180HEV2, LSN240HEV2, LSN090HFV3, LSN120HFV3, LSN180HFV3, LSN240HFV3 LSN090HXV2, LSN120HXV2 |

### Do Not's

- *Do not install the unit near a heat or steam source, or where considerable amounts of oil, iron powder, or flour are used. (These materials will generate condensate, cause a reduction in heat exchanger efficiency, or the drain to malfunction. If this is a potential problem, install a ventilation fan large enough to vent out these materials.)*
- *Ensure there are no obstacles to air circulation around the unit; keep proper distances from ceilings, doorways, floor, walls, etc.*
- *Do not install in an area where operation sound will disturb occupants--place the unit where noise prevention is taken into consideration*
- *Do not install near doorway.*
- *Avoid installing the unit near high-frequency generators.*

Figure 11: Installing Near a Heat or Steam Source.

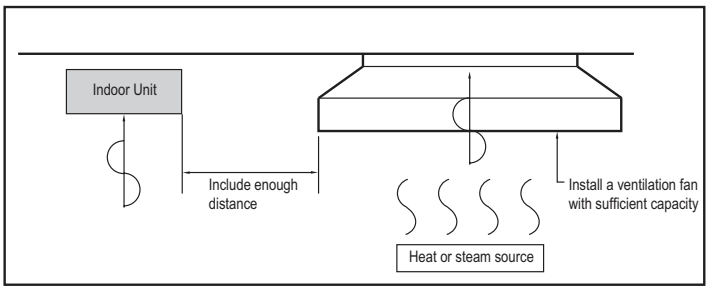


## ⚠ WARNING

*The unit must not be installed where sulfuric acid and flammable or corrosive gases are generated, vented into, or stored. There is risk of fire, explosion, and physical injury or death.*

**The unit will be damaged, will malfunction, and / or will not operate as designed if installed in any of the conditions listed.**

## *Note:*

- *Indoor units (IDUs) must not be placed in an environment where the IDUs will be exposed to harmful volatile organic compounds (VOCs) or in environments where there is improper air make up or supply or inadequate ventilation. If there are concerns about VOCs in the environment where the IDUs are installed, proper air make up or supply and/ or adequate ventilation must be provided. Additionally, in buildings where IDUs will be exposed to VOCs consider a factory-applied epoxy coating to the fan coils for each IDU.*
- *If the unit is installed near a body of water, the installation parts are at risk of corroding. Appropriate anti-corrosion methods must be taken for the unit and all installation parts.*

### Installing in an Area Exposed to Unconditioned Air

In some installation applications, areas (floors, walls) in some rooms will be exposed to unconditioned air (room may be above or next to an unheated garage or storeroom). To countermeasure:

- Verify that carpet is or will be installed (carpet will increase the temperature by three [3] degrees).
- Add insulation between the floor joists.
- Install radiant heat or another type of heating system to the floor.



Due to our policy of continuous product innovation, some specifications may change without notification.
©LG Electronics U.S.A., Inc., Englewood Cliffs, NJ. All rights reserved. "LG" is a registered trademark of LG Corp.

## Drilling the Piping Hole in the Wall

Follow all piping clearance recommendations.

1. Using a 2-9/16 inch hole core drill bit, drill a hole at either the right or left side of the wall mounting, pre-chosen following installation guidelines and application needs.
   - The slant of the hole must be 3/16” to 5/16 inches from level with the slant being upward on the indoor unit side and downward on the outdoor unit side.
2. Finish off the newly drilled hole as shown with bushing and sleeve covering to prevent damage to the insulation and piping.

Figure 12: Drilling Piping Hole.

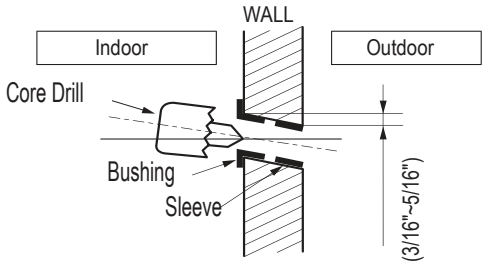


## Mounting the Installation Plate to the Wall

Follow the procedure below and general best practices when mounting the indoor unit’s installation plate to a wall.

1. Depending on the model, the wall mounted indoor unit is shipped with the installation plate attached to its back. To remove, unscrew the one (1) screw that holds the installation plate to the back of the indoor unit.
2. Align the centerline using a leveling tool. Measure the wall and mark the centerline.
3. Attach the installation plate to the wall following the measurements and marks. Use the type “A” screws that are factory-supplied with the plate. If mounting the unit on a concrete wall, use field-supplied anchor bolts.
4. Observe all rear piping clearances when drilling into the wall.

### ⚠ WARNING

- *When choosing a location for the wall mount plate, be sure to take into consideration routing of wiring for power outlets within the wall. Contacting wiring can cause serious bodily injury or death.*
- *Use caution when drilling holes through the walls for the purposes of piping connections. Power wiring can cause serious bodily injury or death.*

## *Note:*

*Select the location carefully. Unit must be anchored to a strong and solid wall to prevent unnecessary vibration.*

Figure 13: Mega 115V Wall Mount Indoor Unit Installation Plate.

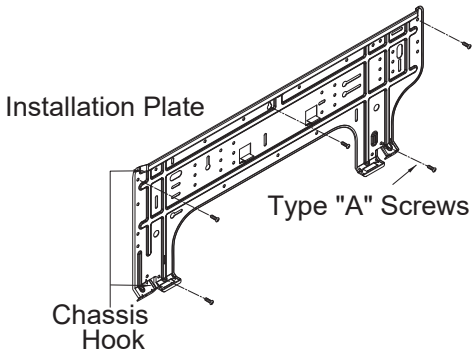


Figure 14: Mega 115V Wall Mount Indoor Unit Installation Plate Dimensions.

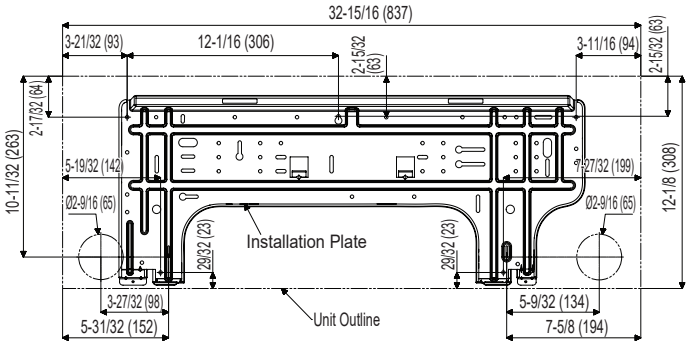


Figure 15: Mega, Standard Efficiency 9K and 12K Wall Mount Indoor Unit Installation Plate.

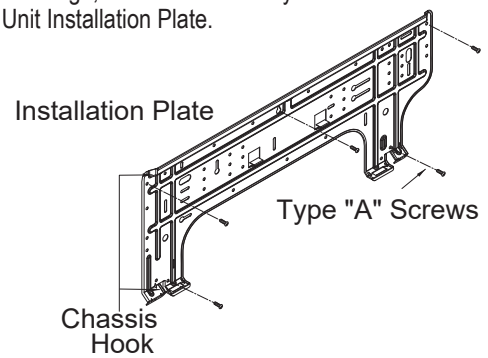


Figure 16: Mega, Standard Efficiency 9K and 12K Wall Mount Indoor Unit Installation Plate Dimensions.

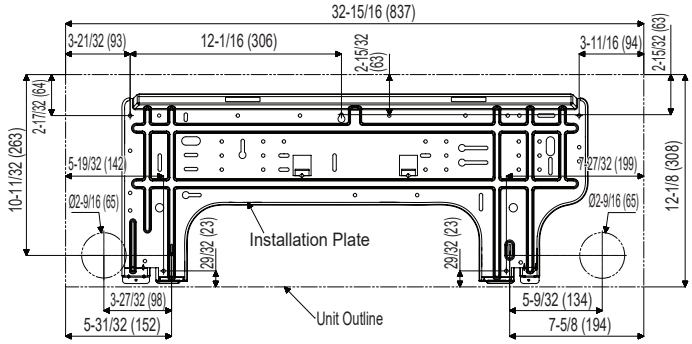





Due to our policy of continuous product innovation, some specifications may change without notification.
©LG Electronics U.S.A., Inc., Englewood Cliffs, NJ. All rights reserved. “LG” is a registered trademark of LG Corp.

# GENERAL INSTALLATION GUIDELINES

## Indoor Unit Mounting

Figure 17: Mega, Standard Efficiency 18K and 24K Wall Mount Indoor Unit Installation Plate.

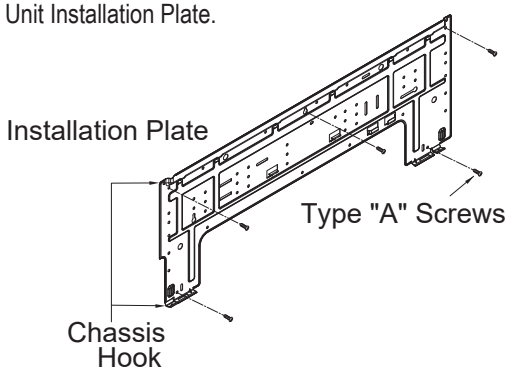


Figure 18: Mega, Standard Efficiency 18K and 24K Wall Mount Indoor Unit Installation Plate Dimensions.

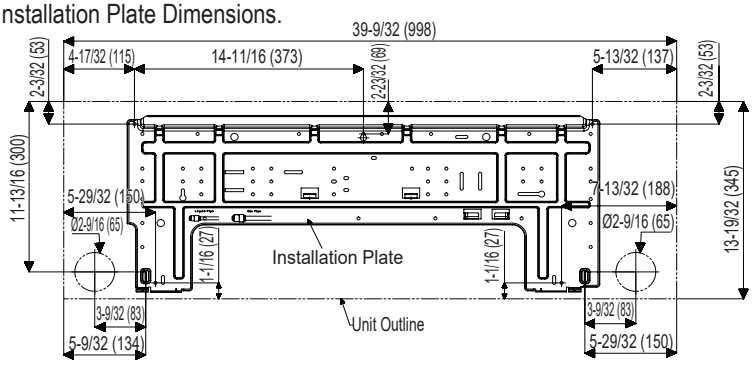


## Removing the Indoor Unit Bottom Cover (HEV2, HFV3, and HXV2 Indoor Units)

To access the indoor unit piping port connections, terminal block, and to make the indoor unit installation procedure easier, it is recommended that the bottom cover be removed first.

1. Unsnap the bottom cover at its top left and right sides (Location 1).
2. Unsnap each of the three (3) or four (4) small C-hooks located in the middle of the bottom cover (Location 2). Number of C-hooks present depends on model of indoor unit.
3. Lift the three (3) to four (4) hinges on the bottom cover up and out of the channels molded to the left, right, and middle of the indoor unit (Location 3). Number of hinges present depends on model of indoor unit.
4. Set aside the bottom cover to re-install after all procedures are complete.

Figure 19: Indoor Unit with the Bottom Cover On (Bottom View; Appearances Will Vary Depending on Indoor Unit Model).

Figure 20: Steps to Removing the Bottom Cover.

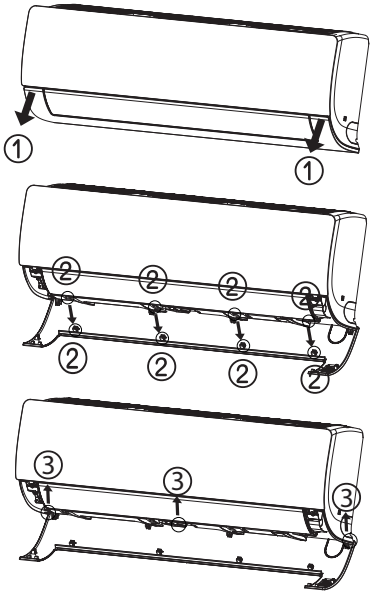


Figure 21: Removing the Bottom Cover (Appearances Will Vary Depending on Indoor Unit Model).

Due to our policy of continuous product innovation, some specifications may change without notification.
©LG Electronics U.S.A., Inc., Englewood Cliffs, NJ. All rights reserved. "LG" is a registered trademark of LG Corp.

### Removing the Indoor Unit Bottom Cover (HEV2, HFV3, and HXV2 Indoor Units), continued.

Figure 23: Bottom Cover with Top and Middle Unsnapped, Front View (Appearances Will Vary Depending on Indoor Unit Model).

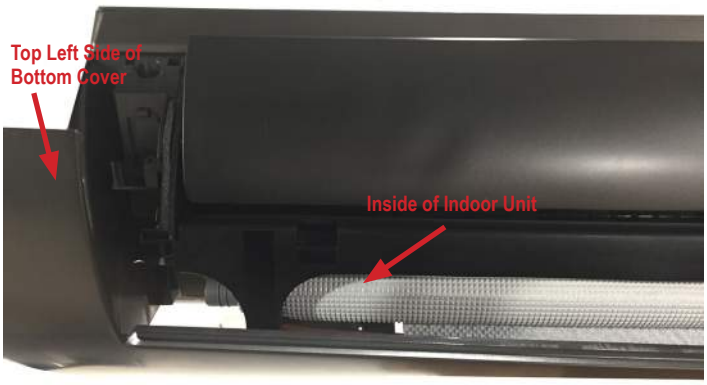


Figure 22: Back of Bottom Cover Completely Removed from Indoor Unit (Appearances Will Vary Depending on Indoor Unit Model).

Figure 24: Close Up of Bottom Cover Connections (Appearances Will Vary Depending on Indoor Unit Model).

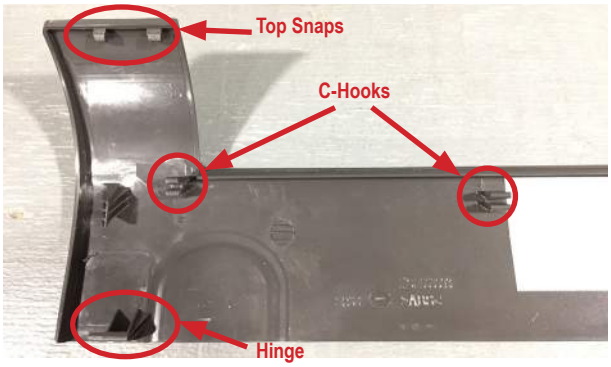






Due to our policy of continuous product innovation, some specifications may change without notification.
©LG Electronics U.S.A., Inc., Englewood Cliffs, NJ. All rights reserved. "LG" is a registered trademark of LG Corp.

# GENERAL INSTALLATION GUIDELINES

Indoor Unit Mounting

## Mounting the Indoor Unit to the Installation Plate

1. Position the indoor unit onto the upper portion of the installation plate.

2. Engage the hooks at the top of the indoor unit with the upper edge of the installation plate (number of hooks depends on model type).

3. Ensure the hooks are properly seated on the installation plate by shaking the indoor unit left and right.

Figure 25: Attaching the Indoor Unit to the Installation Plate (Appearances Will Vary Depending on Model).

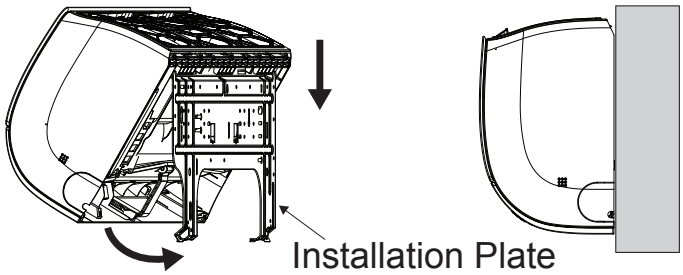


### *Note:*

*Permanently secure the indoor unit to the wall ONLY AFTER all other tasks such as Refrigerant Piping Connections, Drain Piping Connections, Electrical Connections, and Final Installation Procedures are complete. See next page for steps on how to prepare for piping and electrical connections.*

Figure 26: Finishing Indoor Unit Installation to the Wall Plate (Appearances Will Vary Depending on Model).

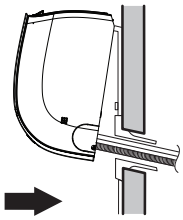

4. Carefully guide the refrigerant piping and drain piping through the access hole.

5. Push the bottom of indoor unit towards the installation plate to anchor to the wall.
   - Press the lower left and right sides of the unit against the installation plate until the hooks engage into their slots.
   - A clicking sound will be heard as the bottom of the indoor unit attaches to the installation plate successfully.
   - Pay attention to the positioning of the piping through the wall.

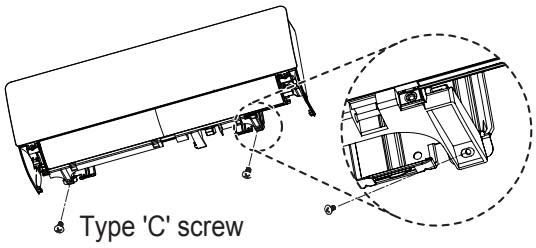


6. Finish the installation by completely securing the indoor unit to the installation plate using the factory-supplied two Type “C” screws at the locations indicated.

**⚠ WARNING**

*The indoor unit can fall from the wall if it is not properly installed and secured to the installation plate. Falling indoor units can cause bodily injury or death.*

### *Note:*

- *To avoid a gap between the indoor unit and the wall, ensure the screws are correctly and fully secured to the installation plate.*
- *To prevent condensate from forming due to an inflow of outdoor air, before indoor unit installation is finished, completely seal the piping access hole in the wall.*



Due to our policy of continuous product innovation, some specifications may change without notification.
©LG Electronics U.S.A., Inc., Englewood Cliffs, NJ. All rights reserved. “LG” is a registered trademark of LG Corp.

## Preparing for Piping / Electrical Connections

1. To prepare the indoor unit for piping and electrical installation, disengage bottom on indoor unit from installation plate by reversing Steps 6, 5, and 4 from the previous procedure, if those procedures have been performed.

2. Unsnap the piping / drain hose holder (L-bracket) out from the indoor unit chassis. Prop it open between the indoor unit chassis and installation plate to separate the bottom of the indoor unit from the wall. This will allow for more working space.

Figure 28: Mounting the Indoor Unit on Installation Plate.

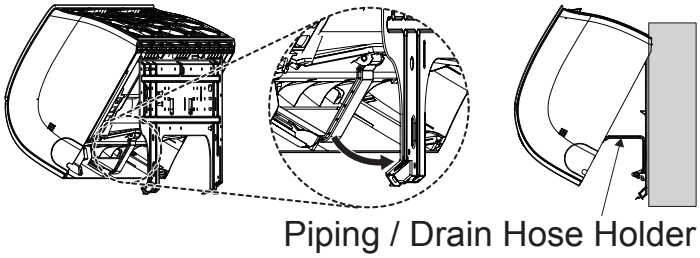


Figure 27: L-bracket Closed (Appearances Will Vary Depending on Indoor Unit Model).

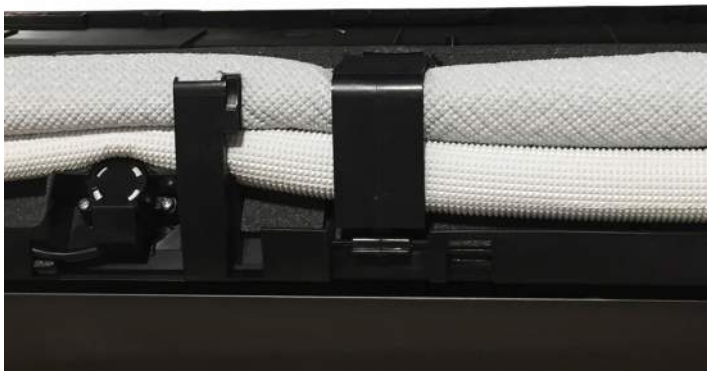

Figure 29: L-bracket Open (Appearances Will Vary Depending on Indoor Unit Model).

### *Note:*

- *Go to the Refrigerant Piping Connections section of this manual for information on indoor unit piping connection installation. See also the Refrigerant Piping Connections section for drain piping installation.*
- *Go to the Electrical Installation section of this manual for information on electrical wiring to the indoor unit.*
- *After all Refrigerant Piping and Electrical Connection procedures are complete, snap the L-bracket closed, and secure the indoor unit to the installation plate as detailed in Steps 5 and 6 in "Mounting the Indoor Unit to the Installation Plate".*



Due to our policy of continuous product innovation, some specifications may change without notification.
©LG Electronics U.S.A., Inc., Englewood Cliffs, NJ. All rights reserved. "LG" is a registered trademark of LG Corp.

# REFRIGERANT SAFETY STANDARDS / DEVICE CONNECTION LIMITATIONS

## Refrigerant Safety Standards

ASHRAE Standards 15-2010 and 34-2010 address refrigerant safety and the maximum allowable concentration of refrigerant in an occupied space. Refrigerant will dissipate into the atmosphere, but a certain volume of air is required to safely dissipate the refrigerant. For R410A refrigerant, the maximum allowable concentration of refrigerant is 26 lbs./1,000 cubic feet (Addendum L modified the RCL to 26) of occupied spaces. Buildings with 24-hour occupancy are allowed half of that concentration.

If a single zone system develops a refrigerant leak, the entire refrigerant charge of the system will dump into the area where the leak occurs. To meet ASHRAE Standards 15 and 34, the smallest room volume on the system must be calculated and compared to the maximum allowable concentration. Also consult state and local codes in regards to refrigerant safety.

## Device Connection Limitations

A single-zone system consists of one outdoor unit and one indoor unit. One of the most critical elements of a single-zone system is the refrigerant piping. If the connection piping is not within allowable limits, there will be reliability, performance, noise, and vibration issues. The table below lists pipe length limits that must be followed in the design of a Single Zone Mega, Standard Efficiency, or Mega 115V refrigerant pipe system. Refer to the figure at right for maximum length and elevation of piping.

Figure 30: System Layout.

Max Length = A
Max Elevation = B

Unit = Feet

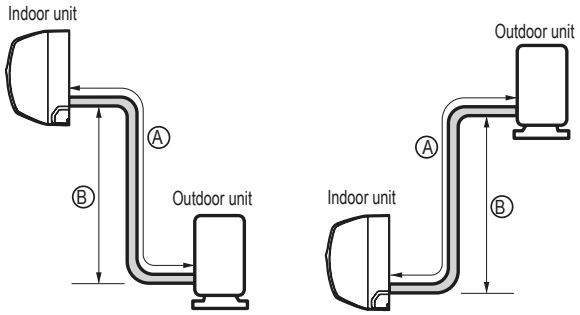


Table 10: Single Zone Mega, Standard Efficiency, and Mega 115V Refrigerant Piping System Limitations.

| Model Numbers | | LS090HEV2, LS120HEV2 LS090HFV3, LS120HFV3 | LS180HEV2, LS240HEV2 LS180HFV3, LS240HFV3 | LS090HXV2, LS120HXV2 |
|---|---|---|---|---|
| Pipe Sizes | Vapor | 3/8 inches | 1/2 inches | 3/8 inches |
| | Liquid | 1/4 inches | 1/4 inches | 1/4 inches |
| Pipe Length (ELF = Equivalent Length of pipe in Feet) | Standard Piping Length | 24.6 | 24.6 | 24.6 |
| | Piping Length with No Additional Refrigerant | 24.6 | 24.6 | 24.6 |
| | Longest total equivalent piping length | 49.2 | 65.6 | 49.2 |
| | Shortest total equivalent piping length | 9.8 | 9.8 | 9.8 |
| | Distance between fittings and indoor units or outdoor units | ≥20 inches | ≥20 inches | ≥20 inches |
| Elevation (All Elevation Limitations are Measured in Actual Feet) | If outdoor unit is above indoor unit | 23 feet | 32.8 feet | 23 feet |
| | If outdoor unit is below indoor unit | 23 feet | 32.8 feet | 23 feet |
| Additional Refrigerant Needed (oz/ft) | | 0.22 | 0.26 | 0.22 |



Due to our policy of continuous product innovation, some specifications may change without notification.
© LG Electronics U.S.A., Inc., Englewood Cliffs, NJ. All rights reserved. "LG" is a registered trademark of LG Corp.

## Selecting Field-Supplied Copper Piping

***Note:***
*Always follow local codes when selecting and installing copper pipe and piping system components.*

Approved piping for use with LG Single Zone products will be marked "R410 RATED" along the length of the pipe. Piping wall thickness must meet local code requirements and be approved for a maximum operating pressure of 551 psi. When bending piping, try to keep the number of bends to a minimum, and use the largest radii possible to reduce the equivalent length of installed piping; also, bending radii greater than ten (10) piping diameters can minimize pressure drop. Be sure no traps or sags are present.

### For Single Zone Systems

LG prefers the use of ACR copper piping rated at the system working pressure was used.

***Note:***
*Always properly support the piping as per the instructions in the "Pipe Supports" section.*

Table 12: ACR Rated Copper Tubing Material.

| | |
|---|---|
| **Type** | Seamless Phosphorous Deoxidized |
| **Class** | UNS C12200 DHP |
| **Straight Lengths** | H58 Temper |
| **Coils** | O60 Temper |

Table 11: Piping Tube Thicknesses.

| **OD (in)** | 1/4 | 3/8 | 1/2 | 5/8 | 3/4 | 7/8 | 1-1/8 | 1-3/8 | 1-5/8 |
|---|---|---|---|---|---|---|---|---|---|
| **Material** | Rigid or Soft ACR Rated for R410A | | | Rigid or Solid ACR Rated for R410A | | | | | |
| **Min. Bend Radius (in)** | 0.563 | 0.9375 | 1.5 | 2.25 | 3.0 | 3.0 | 3.5 | 4.0 | 4.5 |
| **Min. Wall Thickness (in)** | 0.03 | 0.03 | 0.03 | 0.03 | 0.03 | 0.03 | 0.03 | 0.04 | 0.050 |

Table 13: ACR Copper Tubing Dimensions and Physical Characteristics[1-3].

| **Nominal Pipe Outside Diameter (in)** | **Actual Outside Diameter (in)** | **Drawn Temper** | | | **Annealed Temper** | | |
|---|---|---|---|---|---|---|---|
| | | **Nominal Wall Thickness (in)** | **Weight (lb/ft)** | **Cubic ft per Linear ft** | **Nominal Wall Thickness (in)** | **Weight (lb/ft)** | **Cubic ft per Linear ft** |
| 1/4 | 0.250 | -- | -- | -- | 0.030 | 0.081 | 0.00020 |
| 3/8 | 0.375 | 0.030 | 0.126 | 0.00054 | 0.032 | 0.134 | 0.00053 |
| 1/2 | 0.500 | 0.035 | 0.198 | 0.00101 | 0.032 | 0.182 | 0.00103 |
| 5/8 | 0.625 | 0.040 | 0.285 | 0.00162 | 0.035 | 0.251 | 0.00168 |
| 3/4 | 0.750 | 0.042 | 0.362 | 0.00242 | 0.042 | 0.362 | 0.00242 |
| 7/8 | 0.875 | 0.045 | 0.455 | 0.00336 | 0.045 | 0.455 | 0.00336 |
| 1-1/8 | 1.125 | 0.050 | 0.655 | 0.00573 | 0.050 | 0.655 | 0.00573 |

*[1]All dimensions provided are in accordance with ASTM B280 – Standard..*
*[2]Design pressure = 551 psig.*
*[3]The Copper Tube Handbook, 2010, Copper Development Association Inc., 260 Madison Avenue, New York, NY 10016.*

***Note:***
- *Commercially available piping often contains dust and other materials. Always blow it clean with a dry inert gas.*
- *Prevent dust, water or other contaminants from entering the piping during installation.*




Due to our policy of continuous product innovation, some specifications may change without notification.
© LG Electronics U.S.A., Inc., Englewood Cliffs, NJ. All rights reserved. "LG" is a registered trademark of LG Corp.

## Copper Expansion and Contraction

Under normal operating conditions, the vapor pipe temperature of a Duct Free System can vary as much as 280°F. With this large variance in pipe temperature, the designer must consider pipe expansion and contraction to avoid pipe and fitting fatigue failures.

Refrigerant pipe along with the insulation jacket form a cohesive unit that expands and contracts together. During system operation, thermal heat transfer occurs between the pipe and the surrounding insulation.

If the pipe is mounted in free air space, no natural restriction to movement is present if mounting clamps are properly spaced and installed. When the refrigerant pipe is mounted underground in a utility duct stacked among other pipes, natural restriction to linear movement is present. In extreme cases, the restrictive force of surface friction between insulating jackets could become so great that natural expansion ceases and the pipe is "fixed" in place. In this situation, opposing force caused by change in refrigerant fluid/vapor temperature can lead to pipe/fitting stress failure.

The refrigerant pipe support system must be engineered to allow free expansion to occur. When a segment of pipe is mounted between two fixed points, provisions must be provided to allow pipe expansion to naturally occur. The most common method is the inclusion of expansion Loop or U-bends. Each segment of pipe has a natural fixed point where no movement occurs. This fixed point is located at the center point of the segment assuming the entire pipe is insulated in a similar fashion. The natural fixed point of the pipe segment is typically where the expansion Loop or U-bend must be.

Linear pipe expansion can be calculated using the following formula:

$$LE = C \times L \times (T_r - T_a) \times 12$$

| | | |
|---|---|---|
| LE | = | Anticipated linear tubing expansion (in.) |
| C | = | Constant (For copper = $9.2 \times 10^{-6}$ in./in.°F) |
| L | = | Length of pipe (ft.) |
| $T_R$ | = | Refrigerant pipe temperature (°F) |
| $T_a$ | = | Ambient air temperature (°F) |
| 12 | = | Inches to feet conversion (12 in./ft.) |

1. From Table 13 find the row corresponding with the actual length of the straight pipe segment.
2. Estimate the minimum and maximum temperature of the pipe. In the column showing the minimum pipe temperature, look up the anticipated expansion distance. Do the same for the maximum pipe temperature.
3. Calculate the difference in the two expansion distance values. The result will be the anticipated change in pipe length.

### General Example:

A system is installed and the design shows that there is a 100 foot straight segment of tubing between an indoor unit and the outdoor unit. In heating, this pipe transports hot gas vapor to the indoor units at 120 °F. In cooling, the same tube is a suction line returning refrigerant vapor to the outdoor unit at 40 °F. Look up the copper tubing expansion at each temperature and calculate the difference.

### Vapor Line

Transporting Hot Vapor: 100 ft. pipe at 120 °F = 1.40 in.

Transporting Suction Vapor: 100 ft. pipe at 40 °F = 0.40 in.

Anticipated Change in Length: 1.40 in. – 0.40 in. = 1.00 in.

### Liquid Line

The liquid temperature remains relatively the same temperature; only the direction of flow will reverse. Therefore, no significant change in length of the liquid line is anticipated.

When creating an expansion joint, the joint height must be a minimum of two times the joint width. Although different types of expansion arrangements are available, the data for correctly sizing an Expansion Loop is provided in Table 14. Use soft copper with long radius bends on longer runs or long radius elbows for shorter pipe segments. Using the anticipated linear expansion (LE) distance calculated, look up the Expansion Loop or U-bend minimum design dimensions. If other types of expansion joints are chosen, design per ASTM B-88 Standards.

See table on next page for precalculated anticipated expansion for various pipe sizes and lengths of refrigerant tubing.

### To find the anticipated expansion value:

1. From the table on the next page, find the row corresponding with the actual feet of the straight pipe segment.
2. Estimate the minimum and maximum temperature of the pipe.
3. In the column showing the minimum pipe temperature, look up the anticipated expansion distance corresponding to the segment length. Do the same for the maximum pipe temperature.
4. Calculate the difference in the two expansion distance values. The result will be the change in pipe length.



Due to our policy of continuous product innovation, some specifications may change without notification.
© LG Electronics U.S.A., Inc., Englewood Cliffs, NJ. All rights reserved. "LG" is a registered trademark of LG Corp.

# COPPER EXPANSION AND CONTRACTION

Table 14: Linear Thermal Expansion of Copper Tubing in Inches.

| Pipe Length[1] | Fluid Temperature °F | | | | | | | | | | | | | | | | | | | |
|---|---|---|---|---|---|---|---|---|---|---|---|---|---|---|---|---|---|---|---|---|
| | 35° | 40° | 45° | 50° | 55° | 60° | 65° | 70° | 75° | 80° | 85° | 90° | 95° | 100° | 105° | 110° | 115° | 120° | 125° | 130° |
| 10 | 0.04 | 0.04 | 0.05 | 0.06 | 0.06 | 0.07 | 0.08 | 0.08 | 0.09 | 0.09 | 0.10 | 0.10 | 0.11 | 0.11 | 0.11 | 0.12 | 0.13 | 0.14 | 0.15 | 0.15 |
| 20 | 0.08 | 0.08 | 0.10 | 0.12 | 0.13 | 0.14 | 0.15 | 0.16 | 0.17 | 0.18 | 0.19 | 0.20 | 0.21 | 0.22 | 0.22 | 0.23 | 0.26 | 0.28 | 0.29 | 0.30 |
| 30 | 0.12 | 0.12 | 0.15 | 0.18 | 0.20 | 0.21 | 0.23 | 0.24 | 0.26 | 0.27 | 0.29 | 0.30 | 0.32 | 0.33 | 0.32 | 0.35 | 0.39 | 0.42 | 0.44 | 0.45 |
| 40 | 0.16 | 0.16 | 0.20 | 0.24 | 0.26 | 0.28 | 0.30 | 0.32 | 0.34 | 0.36 | 0.38 | 0.40 | 0.42 | 0.44 | 0.43 | 0.46 | 0.52 | 0.56 | 0.58 | 0.60 |
| 50 | 0.20 | 0.20 | 0.25 | 0.30 | 0.33 | 0.35 | 0.38 | 0.40 | 0.43 | 0.45 | 0.48 | 0.50 | 0.53 | 0.55 | 0.54 | 0.58 | 0.65 | 0.70 | 0.73 | 0.75 |
| 60 | 0.24 | 0.24 | 0.30 | 0.36 | 0.39 | 0.42 | 0.45 | 0.48 | 0.51 | 0.54 | 0.57 | 0.60 | 0.63 | 0.66 | 0.65 | 0.69 | 0.78 | 0.84 | 0.87 | 0.90 |
| 70 | 0.28 | 0.28 | 0.35 | 0.42 | 0.46 | 0.49 | 0.53 | 0.56 | 0.60 | 0.63 | 0.67 | 0.70 | 0.74 | 0.77 | 0.76 | 0.81 | 0.91 | 0.98 | 1.02 | 1.05 |
| 80 | 0.32 | 0.32 | 0.40 | 0.48 | 0.52 | 0.56 | 0.60 | 0.64 | 0.68 | 0.72 | 0.76 | 0.80 | 0.84 | 0.88 | 0.86 | 0.92 | 1.04 | 1.12 | 1.16 | 1.20 |
| 90 | 0.36 | 0.36 | 0.45 | 0.54 | 0.59 | 0.63 | 0.68 | 0.72 | 0.77 | 0.81 | 0.86 | 0.90 | 0.95 | 0.99 | 0.97 | 1.04 | 1.17 | 1.26 | 1.31 | 1.35 |
| 100 | 0.40 | 0.40 | 0.50 | 0.60 | 0.65 | 0.70 | 0.75 | 0.80 | 0.85 | 0.90 | 0.95 | 1.00 | 1.05 | 1.10 | 1.08 | 1.15 | 1.30 | 1.40 | 1.45 | 1.50 |
| 120 | 0.48 | 0.48 | 0.60 | 0.72 | 0.78 | 0.84 | 0.90 | 0.96 | 1.02 | 1.08 | 1.14 | 1.20 | 1.26 | 1.32 | 1.30 | 1.38 | 1.56 | 1.68 | 1.74 | 1.80 |
| 140 | 0.56 | 0.56 | 0.70 | 0.84 | 0.91 | 0.98 | 1.05 | 1.12 | 1.19 | 1.26 | 1.33 | 1.40 | 1.47 | 1.54 | 1.51 | 1.61 | 1.82 | 1.96 | 2.03 | 2.10 |
| 160 | 0.64 | 0.64 | 0.80 | 0.96 | 1.04 | 1.12 | 1.20 | 1.28 | 1.36 | 1.44 | 1.52 | 1.60 | 1.68 | 1.76 | 1.73 | 1.84 | 2.08 | 2.24 | 2.32 | 2.40 |
| 180 | 0.72 | 0.72 | 0.90 | 1.08 | 1.17 | 1.26 | 1.35 | 1.44 | 1.53 | 1.62 | 1.71 | 1.80 | 1.89 | 1.98 | 1.94 | 2.07 | 2.34 | 2.52 | 2.61 | 2.70 |

[1]Pipe length baseline temperature = 0°F. "Expansion of Carbon, Copper and Stainless Steel Pipe," *The Engineers' Toolbox*, www.engineeringtoolbox.com.

Figure 31: Coiled Expansion Loops and Offsets (Plan View).

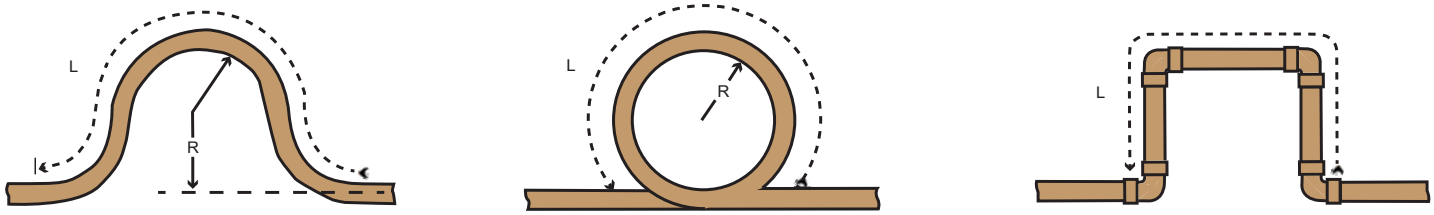


Large Tubing U-bend (>3/4 in.) Loop Small Tubing U-bend (<3/4 in.)

***Note:***
*All expansion loops and offsets must be installed in the horizontal plane to prevent the possibility of trapping oil. Loops and offsets in vertical risers must also be installed in a horizontal plane.*

Table 15: Radii of Coiled Expansion Loops and Developed Lengths of Expansion Offsets.

| Anticipated Linear Expansion (LE) (inches) | | Nominal Tube Size (OD) inches | | | |
|---|---|---|---|---|---|
| | | 1/4 | 3/8 | 1/2 | 3/4 |
| 1/2 | R[1] | 6 | 7 | 8 | 9 |
| | L[2] | 38 | 44 | 50 | 59 |
| 1 | R[1] | 9 | 10 | 11 | 13 |
| | L[2] | 54 | 63 | 70 | 83 |
| 1-1/2 | R[1] | 11 | 12 | 14 | 16 |
| | L[2] | 66 | 77 | 86 | 101 |
| 2 | R[1] | 12 | 14 | 16 | 19 |
| | L[2] | 77 | 89 | 99 | 117 |
| 2-1/2 | R[1] | 14 | 16 | 18 | 21 |
| | L[2] | 86 | 99 | 111 | 131 |
| 3 | R[1] | 15 | 17 | 19 | 23 |
| | L[2] | 94 | 109 | 122 | 143 |
| 3-1/2 | R[1] | 16 | 19 | 21 | 25 |
| | L[2] | 102 | 117 | 131 | 155 |
| 4 | R[1] | 17 | 20 | 22 | 26 |
| | L[2] | 109 | 126 | 140 | 166 |

[1]R = Centerline Length of Pipe. [2]L = Centerline Minimum Radius (inches).





Due to our policy of continuous product innovation, some specifications may change without notification.
© LG Electronics U.S.A., Inc., Englewood Cliffs, NJ. All rights reserved. "LG" is a registered trademark of LG Corp.

# PIPING MATERIALS AND HANDLING

## Piping Materials and Handling

Pipes used for the refrigerant piping system must include the specified thickness, and the interior must be clean.

While handling and storing, ⃠ do not bend or damage the pipes, and take care not to contaminate the interior with dust, moisture, etc.

Keep Pipes Capped While Storing.

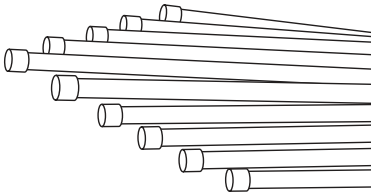

Keep refrigerant pipe dry, clean, and airtight.

| | Dry | Clean | Airtight |
|---|---|---|---|
| | No moisture should be inside the piping. | No dust should be inside the piping. | No leaks should occur. |
| | 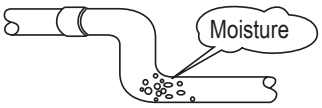  | 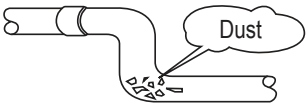  | 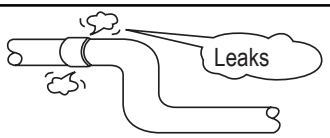  |
| **Possible Problems** | - Significant hydrolysis of refrigerant oil.<br>- Refrigerant oil degradation.<br>- Poor insulation of the compressor.<br>- System does not operate properly.<br>- EEVs, capillary tubes are clogged. | - Refrigerant oil degradation.<br>- Poor insulation of the compressor.<br>- System does not operate properly.<br>- EEVs and capillary tubes become clogged. | - Refrigerant gas leaks / shortages.<br>- Refrigerant oil degradation.<br>- Poor insulation of the compressor.<br>- System does not operate properly. |
| **Solutions** | - Remove moisture from the piping.<br>- Piping ends should remain capped until connections are complete.<br>- ⃠ Do not install piping on a rainy day.<br>- Connect piping properly at the unit's side.<br>- Remove caps only after the piping is cut, the burrs are removed, and after passing the piping through the walls.<br>- Evacuate system to a minimum of 500 microns and insure the vacuum holds at that level for 24 hours | - Remove dust from the piping.<br>- Piping ends should remain capped until connections are complete.<br>- Connect piping properly at the side of the unit.<br>- Remove caps only after the piping is cut and burrs are removed.<br>- Retain the cap on the piping when passing it through walls, etc. | - Test system for air tightness.<br>- Perform brazing procedures that comply with all applicable standards.<br>- Perform flaring procedures that comply with all applicable standards.<br>- Perform flanging procedures that comply with all applicable standards.<br>- Ensure that refrigerant lines are pressure tested to 550 psig and hold for 24 hours. |



Due to our policy of continuous product innovation, some specifications may change without notification.
© LG Electronics U.S.A., Inc., Englewood Cliffs, NJ. All rights reserved. "LG" is a registered trademark of LG Corp.

Proper system operation depends on the installer using utmost care while assembling the piping system. The following pages are an overview of best practices when installing the refrigerant piping system.

***Note:***

*LG Electronics U.S.A.,Inc., is not responsible for any piping calculations, refrigerant leaks, degradation of performance, any other potential problems or damages caused by the interconnecting piping, their joint connections, isolation valves, or introduced debris inside the piping system.*

## ⃠ No Pipe Size Substitutions

Use only the pipe size selected by the information in this manual. Using a different size is prohibited and will result in a system malfunction or failure to work at all.

## ⃠ No In-line Refrigeration Components

Components such as oil traps, solenoid valves, filter-driers, sight glasses, tee fittings, and other after-market accessories are ⃠ not permitted on the refrigerant piping system between the outdoor units and the indoor units. LG Single Zone systems are provided with redundant systems that make sure oil is properly returned to the compressor. Sight-glasses and solenoid valves will cause vapor to form in the liquid stream. Over time, driers will deteriorate and introduce debris into the system. The designer and installer must verify the refrigerant piping system is free of traps, sagging pipes, sight glasses, filter driers, etc.

## Field-Provided Isolation Ball Valves

LG maintains a neutral position on using isolation valves in LG HVAC refrigerant piping systems. LG does not endorse any manufacturer of isolation valves. It is recognized that installing isolation valves will simplify future maintenance requirements, and, if used, considerations must be taken including, but not limited to, the following:

- Pressure drops for any component used, including isolation valves, must be known in equivalent pipe length and calculated into the total and segment equivalent piping lengths and compared to product design limitations.
- In all cases, materials must be suitable for the application and any applicable codes, including, but not limited to, diameter and wall thickness continuity per ACR standards.

Failure to do so will cause significant performance degradation. Proper leak checks must be performed. Using isolation valves does not automatically void any LG product warranty, however, a limited warranty will be voided in whole or part if any field supplied accessory fail in any way that causes product failure.

## Using Elbows

Field-supplied elbows are allowed if they are long radius and designed for use with R410A refrigerant. The designer and installer, however, must be cautious with the quantity and size of fittings used, and must account for the additional pressure losses in equivalent pipe length calculation for each branch. The equivalent pipe length of each elbow must be added to each pipe segment manually (see table).

Table 16: Equivalent Piping Length for Elbows.

| Elbow (ft.) | 1/4 | 3/8 | 1/2 | 5/8 | 3/4 |
|---|---|---|---|---|---|
| | 0.5 | 0.6 | 0.7 | 0.8 | 1.2 |

## Pipe Bends

When bending soft copper, use long radius bends. Refer to the “Radii of Coiled Expansion Loops and Developed Lengths of Expansion Offsets” table for minimum radius specifications.



Due to our policy of continuous product innovation, some specifications may change without notification.
© LG Electronics U.S.A., Inc., Englewood Cliffs, NJ. All rights reserved. “LG” is a registered trademark of LG Corp.

## Obstacles

When an obstacle, such as an I-beam or concrete T, is in the path of the planned refrigerant pipe run, it is best practice to route the pipe over the obstacle. If adequate space is not available to route the insulated pipe over the obstacle, then route the pipe under the obstacle. In either case, it is imperative the length of the horizontal section of pipe above or below the obstacle be a minimum of three (3) times the longest vertical rise (or fall) at either end of the segment.

Figure 32: Installing Piping Above and Below an Obstacle.

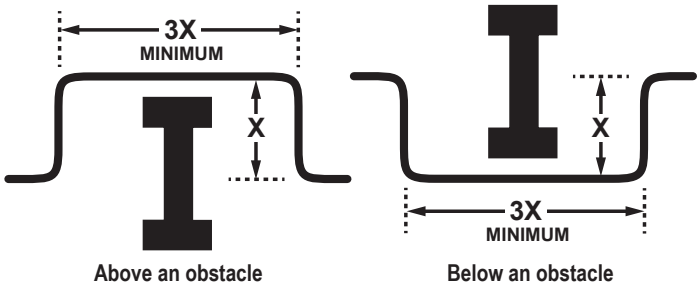


## Pipe Supports

A properly installed pipe system must be adequately supported to avoid pipe sagging. Sagging pipes become oil traps that lead to equipment malfunction.

Pipe supports must ⃠ never touch the pipe wall; supports must be installed outside (around) the primary pipe insulation jacket. Insulate the pipe first because pipe supports must be installed outside (around) the primary pipe insulation jacket. Clevis hangers must be used with shields between the hangers and insulation. Field provided pipe supports must be designed to meet local codes. If allowed by code, use fiber straps or split-ring hangers suspended from the ceiling on all-thread rods (fiber straps or split ring hangers can be used as long as they do not compress the pipe insulation). Place a second layer of insulation over the pipe insulation jacket to prevent chafing and compression of the primary insulation within the confines of the support pipe clamp.

A properly installed pipe system will have sufficient supports to avoid pipes from sagging during the life of the system. As necessary, place supports closer for segments where potential sagging could occur. Maximum spacing of pipe supports must meet local codes. If local codes do not specify pipe support spacing, pipe must be supported:

- Maximum of five (5) feet on center for straight segments of pipe up to 3/4 inches outside diameter size.
- Maximum of six (6) feet on center for pipe up to one (1) inch outside diameter size.
- Maximum of eight (8) feet on center for pipe up to two (2) inches outside diameter size.

Wherever the pipe changes direction, place a hanger within twelve (12) inches on one side and within twelve (12) to nineteen (19) inches of the bend on the other side.

Figure 33: Pipe Hanger Details.

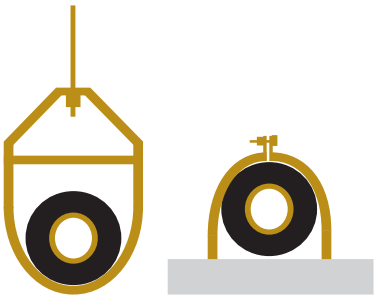

***Note:***
*Use a 4" + long sheet curved sheet metal saddles between hanger bracket and insulation to promote linear expansion/contraction.*

Figure 34: Typical Pipe Support Location—Change in Pipe Direction.

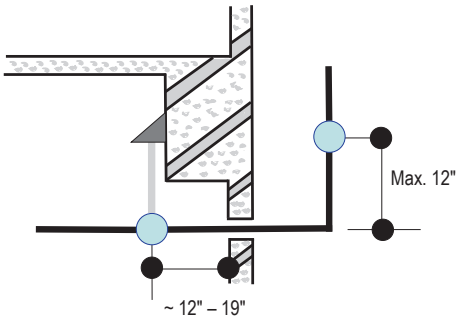




Due to our policy of continuous product innovation, some specifications may change without notification.
© LG Electronics U.S.A., Inc., Englewood Cliffs, NJ. All rights reserved. "LG" is a registered trademark of LG Corp.

## Pipe Sleeves at Penetrations

LG recommends that all pipe penetrations through walls, floors, and pipes buried underground be properly insulated and routed through an appropriate wall sleeve of sufficient size to prevent compression of refrigerant pipe insulation and free movement of the pipe within the sleeve. Use 4"+ curved sheet metal saddles between the bottom surface of the pipe and the bottom surface of the penetration.

Figure 35: Pipe Sleeve Options.

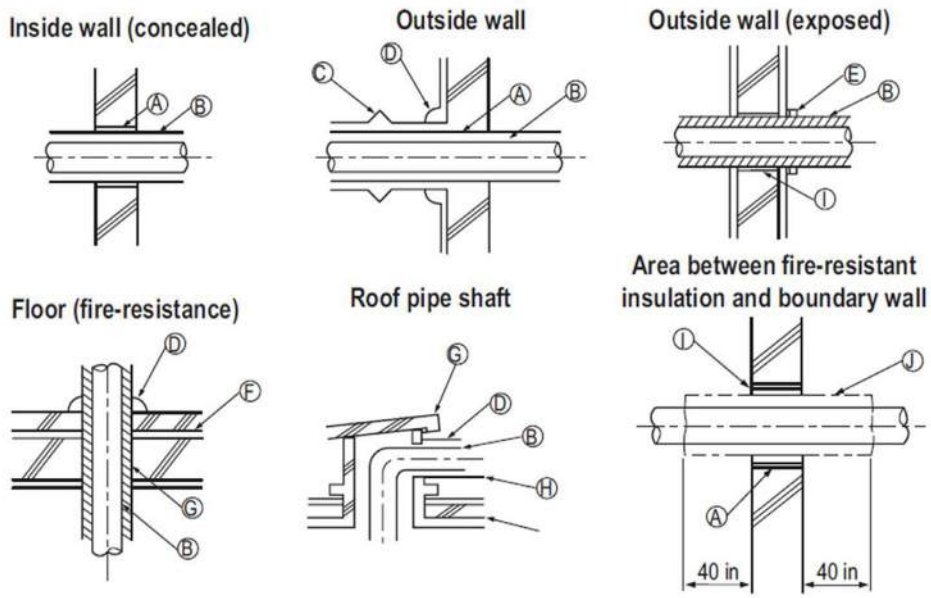


Ⓐ Sleeve
Ⓑ Insulation
Ⓒ Lagging
Ⓓ Caulk
Ⓔ Band
Ⓕ Water-resistant layer
Ⓖ Sleeve with edge
Ⓗ Lagging
Ⓘ Mortar or other fire-resistant caulk
Ⓙ Fire-resistant insulation

When filling an access hole with mortar, cover the area with steel plate so that the insulation will not fall through. For this area, use fire-resistant materials for both the insulation and cover. (Vinyl cover should not be used.)

***Note:***
*Diameter of penetrations must be determined by pipe diameter plus the thickness of the insulation.*

## Underground Refrigerant Piping

Refrigerant pipe installed underground must be routed inside a vapor tight protective sleeve to prevent insulation deterioration and water infiltration. Refrigerant pipe installed inside underground casing must be continuous without any joints. Underground refrigerant pipe must be located at a level **below the frost line**.

Table 17: Utility Conduit Sizes.

| Liquid Pipe[1] | Vapor Pipe[1] | | | |
|---|---|---|---|---|
| | 3/8 (2.0[2,5]) | 1/2 (2.0[2,5]) | 5/8 (2-1/8[2,5]) | 3/4 (2-1/4[2,5]) |
| 1/4 (1.0)[3] | 4 | 4 | 4 | 4 |
| 3/8 (1-1/8)[3] | 4 | 4 | 4 | 5 |
| 1/2 (1-1/2)[4] | 5 | 5 | 5 | 5 |
| 5/8 (1-5/8)[4] | 5 | 5 | 5 | 5 |
| 3/4 (1-3/4)[4] | 5 | 5 | 5 | 5 |

[1]OD pipe diameter in inches; Values in parenthesis () indicate OD of pipe with insulation jacket.

[2]Diameter of pipe with insulation. Thickness of pipe insulation is typical. Actual required thickness will vary based on surrounding ambient conditions and must be calculated and specified by the design engineer.

[3]Insulation thickness (value in parenthesis) = 3/8 inch.

[4]Insulation thickness (value in parenthesis) = 1 inch.

[5]Insulation thickness (value in parenthesis) = 3/4 inch.

Figure 36: Typical Arrangement of Single Zone Refrigerant Pipe and Cable(s) in a Utility Conduit.

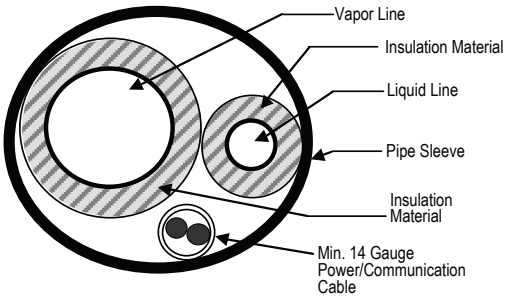


Table 18: Heat Pump Unit Refrigerant Pipe Connections (All Flared Type).

| Model | Liquid Conn. (inches) | Vapor Conn. (inches) |
|---|---|---|
| LSU090HEV2, LSU120HEV2, LSU090HFV3, LSU120HFV3, LSU90HXV2, LSU120HXV2 | 1/4 | 3/8 |
| LSU180HEV2, LSU240HEV2, LSU180HFV3, LSU240HFV3 | 1/4 | 1/2 |

***Note:***
*Provide expansion joints in long pipe segments and place in an accessible conduit box for inspection. Use galvanized curved sheet metal saddles at all mounting points. Pipe must be allowed to move freely linearly.*




Due to our policy of continuous product innovation, some specifications may change without notification.
© LG Electronics U.S.A., Inc., Englewood Cliffs, NJ. All rights reserved. "LG" is a registered trademark of LG Corp.

# FLARING AND BRAZING PROCEDURES

## Flaring and Brazing Procedures

One of the main causes of refrigerant leaks is a defective connection. For LG HVAC systems, the installer needs to know how perform both flared and brazed connections successfully.

***Note:***

- *During installation, it is imperative to keep the piping system free of contaminants and debris such as copper burrs, slag, or carbon dust.*
- ⃠ *Do not use kinked pipe caused by excessive bending in one specific area on its length.*

## Flaring Procedure

***Note:***

*When selecting flare fittings, always use a 45° fitting rated for use with high pressure refrigerant R410A. Selected fittings must also comply with local, state, or federal standards.*

1. Cut the pipe to length.
   - Measure the distance between the indoor unit and the outdoor unit.
   - Cut the pipes a little longer than measured distance.

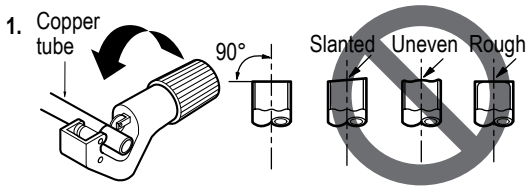


2A. Remove the burrs.
   - Completely remove all burrs from pipe ends.
   - When removing burrs, point the end of the copper pipe down to avoid introducing foreign materials in the pipe.

2B. Slide the flare nut onto the copper tube.

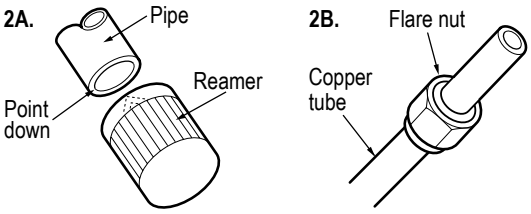


3. Flaring the pipe end.
   - Use the proper size flaring tool to finish flared connections as shown.
   - ALWAYS create a 45° flare when working with R410A.

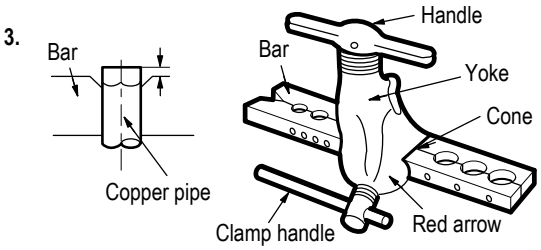


4. Carefully inspect the flared pipe end.
   - Compare the geometry with the figure to the right
   - If the flare is defective, cut it off and re-do procedure.
   - If flare looks good, blow the pipe clean with dry nitrogen.

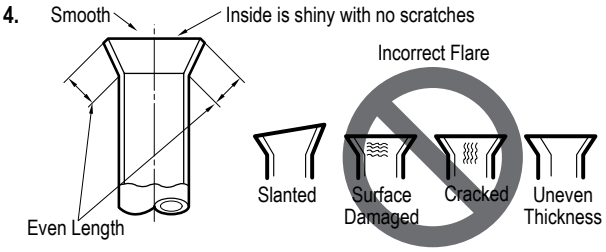


Dimensions of the Flare.

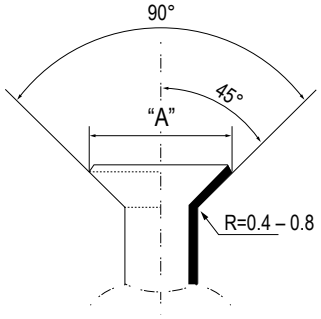


Flared Connection Dimensions / Tightening Torque.

| Pipe Size (in. O.D.) | Outside Diameter (mm) | "A" Dimension (mm [in.]) |
|---|---|---|
| 1/4 | 6.35 | ~ 9.1 (11/32 - 23/64) |
| 3/8 | 9.52 | ~ 13.2 (1/2 - 33/64) |
| 1/2 | 12.7 | ~ 16.6 (41/64 - 21/32) |
| 5/8 | 15.88 | ~ 19.7 (49/64 - 25/32) |
| 3/4 | 19.05 | - |



Due to our policy of continuous product innovation, some specifications may change without notification.
© LG Electronics U.S.A., Inc., Englewood Cliffs, NJ. All rights reserved. "LG" is a registered trademark of LG Corp.

### Tightening the Flare Nuts

Tightening Torque for Flare Nuts.

| Pipe Size (in. O.D.) | Outside Diameter (mm) | Tightening Torque (ft-lbs.) |
|---|---|---|
| 1/4 | 6.35 | 13.0 - 18.0 |
| 3/8 | 9.52 | 24.6 - 30.4 |
| 1/2 | 12.7 | 39.8 - 47.7 |
| 5/8 | 15.88 | 45.4 - 59.3 |
| 3/4 | 19.05 | 71.5 - 87.5 |

1. When connecting the flare nuts, coat the flare (outside only) with polyvinyl ether (PVE) refrigeration oil only.

***Note:***

*⃠ Do not use polyolyester (POE) or any other type of mineral oil as a thread lubricant. These lubricants are not compatible with the PVE oil used in this system and create oil sludge leading to equipment damage and system malfunction.*

*⃠ Do not add any contaminants inside the refrigerant piping.*

2. Initially hand tighten the flare nuts using three (3) or four (4) turns.
3. To finish tightening the flare nuts, use both a torque wrench and a backup wrench.
4. After all the piping has been connected and the caps have been tightened, check for refrigerant gas leaks.

### Loosening the Flare Nuts

Always use two (2) wrenches to loosen the flare nuts.

## Brazing Practices

### ⚠ WARNING

**⃠ Do not braze in an enclosed location. ⃠ Do not allow the refrigerant to leak during brazing. Always test for gas leaks before and after brazing.**

*If the refrigerant combusts, it generates a toxic gas the will cause physical injury or death.*

1. Joints are brazed in the field. Single Zone refrigeration system components contain very small capillary tubes, small orifices, electronic expansion valves, oil separators, and heat exchangers that can easily become blocked. Proper system operation depends on the installer using best practices and utmost care while assembling the piping system.
2. Store pipe stock in a dry place; keep stored pipe capped and clean.
3. Blow clean all pipe sections with dry nitrogen prior to assembly.
4. Always use a non-oxidizing material for brazing. ⃠ Do not use flux, soft solder, or anti-oxidant agents. If the proper material is not used, oxidized film will accumulate and clog or damage the compressors. Flux can harm the copper piping or refrigerant oil.
5. Use a tubing cutter, ⃠ do not use a saw to cut pipe. De-bur and clean all cuts before assembly.
6. Brazing joints:
   - Use a dry nitrogen purge operating at a minimum pressure of three (3) psig and maintain a steady flow.
   - Use a 15% silver phosphorous copper brazing alloy to avoid overheating and produce good flow.
   - Protect isolation valves, electronic expansion valves, and other heat-sensitive control components from excessive heat with a wet rag or heat barrier spray.

Figure 37: Refrigerant Pipe Brazing.

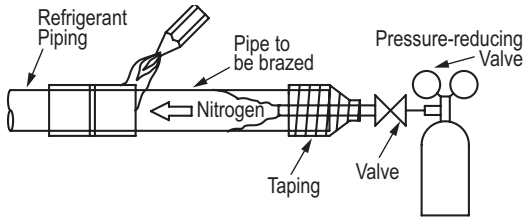


### ⚠ WARNING

- *⃠ Do not allow the refrigerant to leak during brazing; if the refrigerant combusts, it generates a toxic gas. There is risk of fire, explosion, and physical injury or death.*
- *⃠ Do not braze in an enclosed location, and always test for gas leaks before / after brazing. There is risk of fire, explosion, and physical injury or death.*




Due to our policy of continuous product innovation, some specifications may change without notification.
© LG Electronics U.S.A., Inc., Englewood Cliffs, NJ. All rights reserved. "LG" is a registered trademark of LG Corp.

# REFRIGERANT PIPING CONNECTIONS

## Installation Overview

### Installation

Single Zone Mega, Standard Efficiency, and Mega 115V Wall-Mounted systems are one-to-one systems. There is a direct piping connection between the outdoor unit and the indoor unit. The figure at right illustrates the basic pipe connections between the outdoor and indoor unit. Refer to the illustration when proceeding with pipe connections.

The illustration shows the indoor unit being installed at a higher position than the outdoor unit. However, if the outdoor unit is installed at a higher position than the indoor unit, the basic pipe connections are the same.

Refer to the "Connection Limitations" section for specific length limitations in conjunction with outdoor unit and indoor unit positioning.

### *Note:*

- *When proceeding with piping connections, adhere to pipe support spacing lengths as shown in the General Refrigerant Piping System Information section. Refer to the "Pipe Supports" section for information on using clamps and pipe support materials.*
- *Always adhere to local codes regarding piping and accurate support spacing along the piping system.*
- *Always include insulation on all refrigerant and drain piping to ensure condensate does not form and cause damage to walls, floors, etc.*

Figure 38: Installation and Piping Connection Overview (Appearances Will Vary Depending on Model).

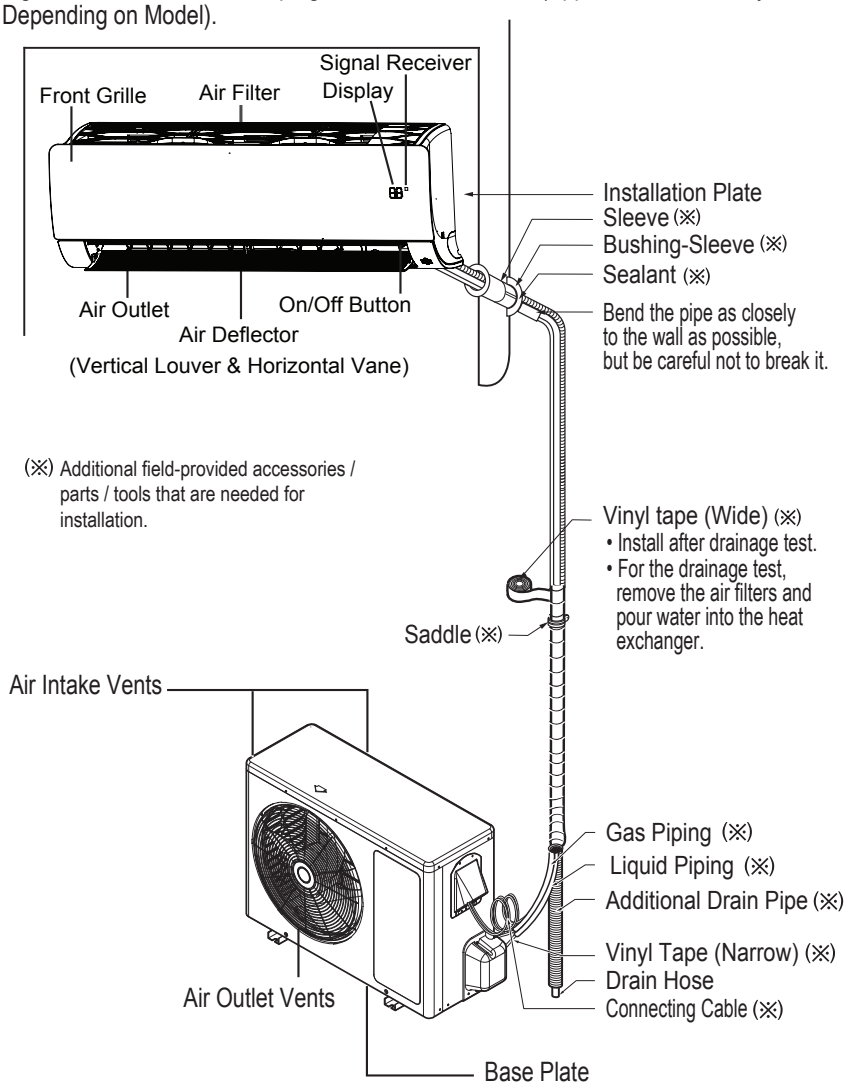




Due to our policy of continuous product innovation, some specifications may change without notification.
©LG Electronics U.S.A., Inc., Englewood Cliffs, NJ. All rights reserved. "LG" is a registered trademark of LG Corp.

## Special Applications

If an additional drain hose is necessary, the end of drain outlet must be routed above the ground. Secure the drain hose appropriately.

### When the Outdoor Unit is Installed Below the Indoor Unit:

1. Use a conduit, piping set cover, or bundle the (separately) insulated refrigerant piping, the drain hose, and the communications / connection (power) cable together.
2. Make sure to include some slack in the wiring. Wiring must be installed in an upwards direction to prevent water from accessing into the control box.
3. Secure the conduit, piping set cover, or bundle along the outside wall using saddles or a similar type of piping support.
4. Seal any openings in the wall that are around the piping.

### When the Outdoor Unit is Installed Above the Indoor Unit:

1. Use a conduit, piping set cover, or bundle the (separately) insulated refrigerant piping and the communications / connection (power) cable together up to the outdoor unit service valves.
2. Make sure to include some slack in the wiring. Wiring must be installed in upwards direction to prevent water from traveling into the control box.
3. If necessary, secure the conduit, piping set cover, or bundle along the outside wall using saddles or a similar type of piping support.
4. Ensure the insulated drain hose from the indoor unit is installed away from the outdoor unit, and in a downwards direction. If necessary, secure along the outside wall using saddles or a similar type of support.
5. Seal any openings in the wall that are around the piping.

Figure 39: Special Applications.

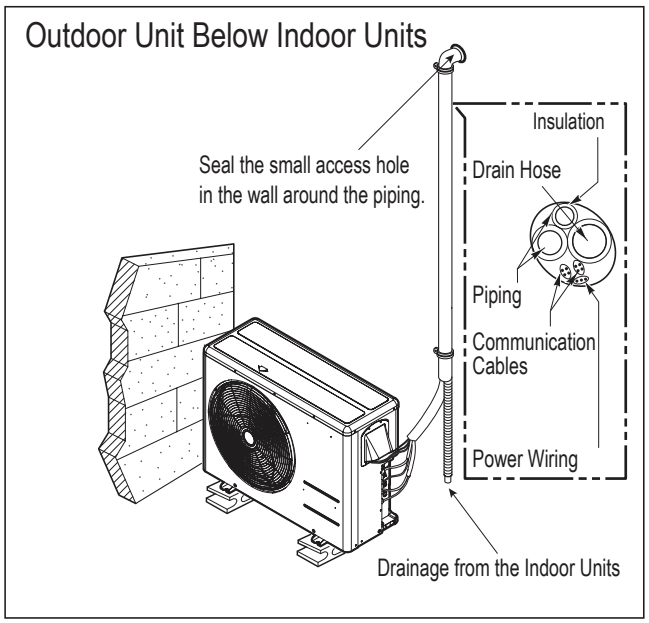


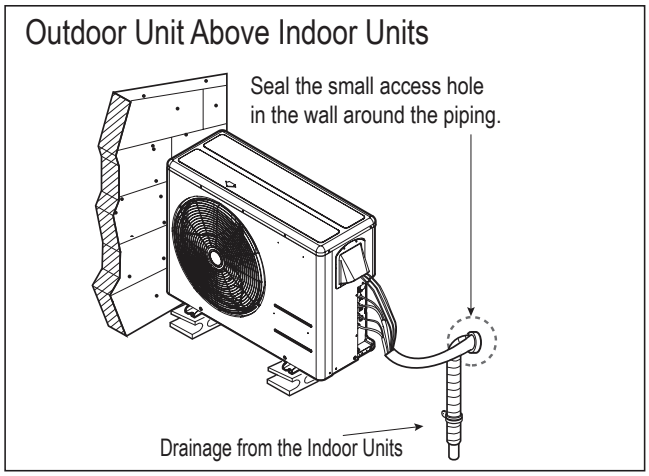




Due to our policy of continuous product innovation, some specifications may change without notification.
©LG Electronics U.S.A., Inc., Englewood Cliffs, NJ. All rights reserved. "LG" is a registered trademark of LG Corp.

# REFRIGERANT PIPING CONNECTIONS

Outdoor Unit Connections

## Outdoor Unit Connections

1. Remove the piping cover or piping / control box cover (configuration depends on outdoor unit model) from the unit by loosening the fastening screws.
2. Align the center of the refrigerant piping and corresponding connection as shown.
3. Refer to the figures below for liquid and gas (vapor) piping attachments onto the outdoor unit.
4. Place a couple of drops of PVE refrigerant oil on outside of the flare before assembling. ⃠ Do not add any contaminants. Tighten the flare nut initially by hand.
5. Finish tightening the flare nut with a torque wrench until the wrench clicks. Follow torque guidelines in the table below. See figures for correct connection points.

Figure 40: LSU090-120HEV2, LSU090-120HFV3, LSU090-120HXV2 Piping / Control Box Cover Removal (Appearances Will Differ Depending on Model).

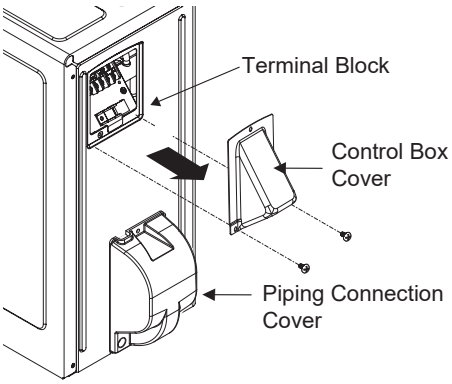


Figure 41: LSU180-240HEV2, LSU180-240HFV3 Piping / Control Box Cover Removal.

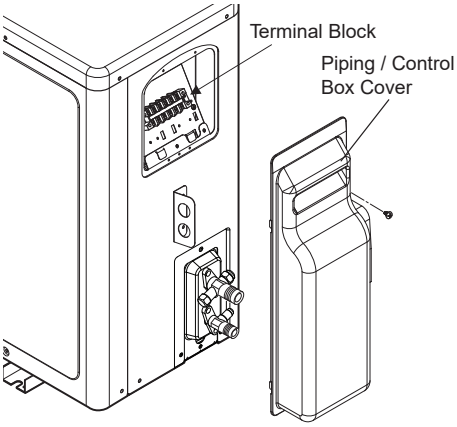


Figure 42: Outdoor Unit Piping Connection (Appearances Will Differ Depending on Model).

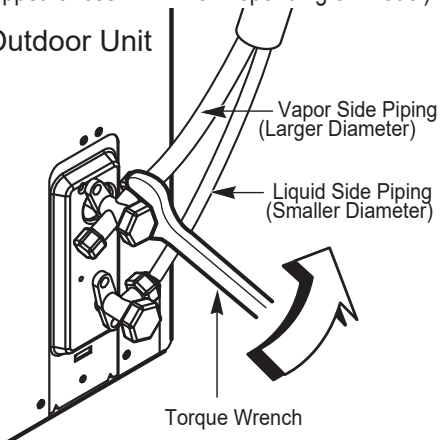


Figure 43: Pipe Attachment.

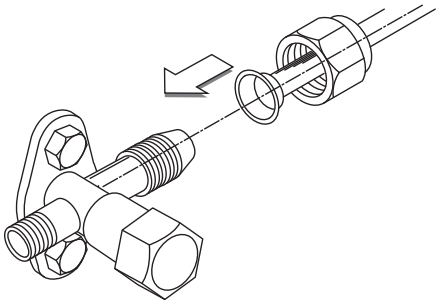

Table 19: Torque Wrench Tightening.

| Pipe Size (in. O.D.) | Outside Diameter (mm) | Torque (ft-lbs.) |
|---|---|---|
| 1/4 | 6.35 | 13.0 - 18.0 |
| 3/8 | 9.52 | 24.6 - 30.4 |
| 1/2 | 12.7 | 39.8 - 47.7 |
| 5/8 | 15.88 | 45.4 - 59.3 |
| 3/4 | 19.05 | 71.5 - 87.5 |



Due to our policy of continuous product innovation, some specifications may change without notification.
©LG Electronics U.S.A., Inc., Englewood Cliffs, NJ. All rights reserved. "LG" is a registered trademark of LG Corp.

## Removing the Indoor Unit Bottom Cover (HEV2, HFV3, and HXV2)

To access the indoor unit piping port connections, and to make the indoor unit installation procedure easier, it is recommended that the bottom cover be removed first.

1. Unsnap the bottom cover at its top left and right sides (Location 1).
2. Unsnap each of the three (3) or four (4) small C-hooks located in the middle of the bottom cover (Location 2). Number of C-hooks present depends on model of indoor unit.
3. Lift the three (3) to four (4) hinges on the bottom cover up and out of the channels molded to the left, right, and middle of the indoor unit (Location 3). Number of hinges present depends on model of indoor unit.
4. Set aside the bottom cover to re-install after all procedures are complete.

Figure 44: Removing the Bottom Cover.

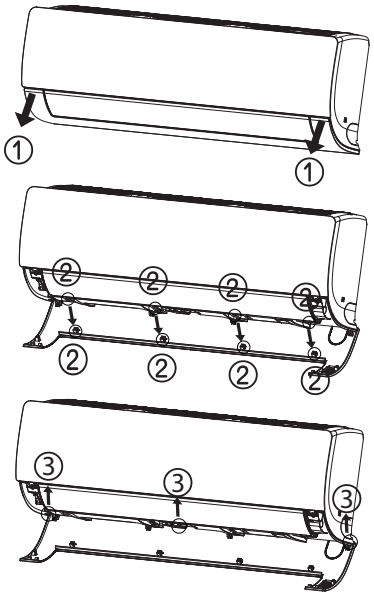


Figure 45: Removing the Bottom Cover, Alternate View.

## Accessing and Positioning the Indoor Unit Piping / Connections (HEV2, HFV3, and HXV2)

1. Unsnap the piping / drain hose holder (L-bracket) out from the indoor unit chassis. Prop it open between the indoor unit chassis and installation plate to separate the bottom of the indoor unit from the wall. This will allow for more working space.

Figure 46: Propping Open the Piping / Drain Hose Holder (L-bracket).

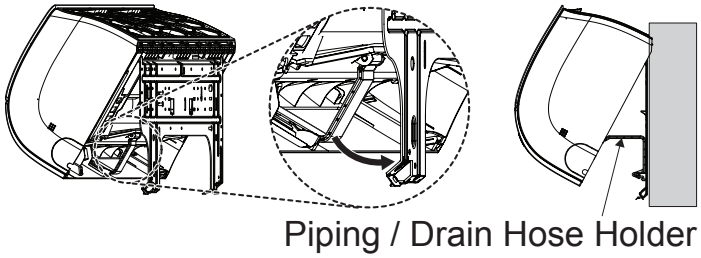


Figure 47: Back of Indoor Unit.

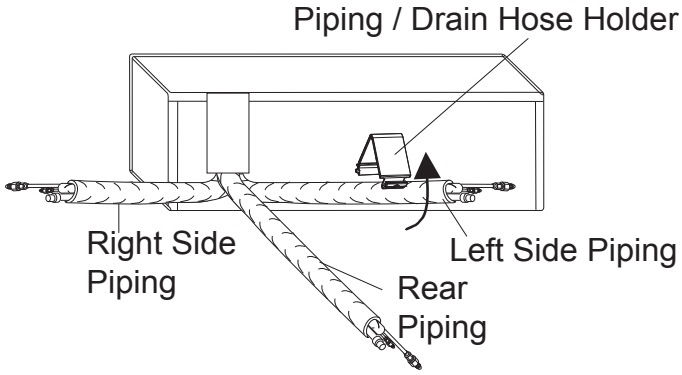


2. Remove the piping port cover.
3. Position the piping by unfolding and bending the piping slowly downward first as shown, then to the left or right (pre-chosen following installation guidelines and application needs) as shown. Secure piping with the piping holder.

Figure 48: Bending Piping at Rear of Indoor Unit.

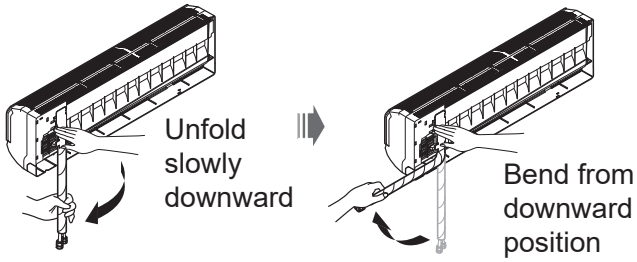




Due to our policy of continuous product innovation, some specifications may change without notification.
©LG Electronics U.S.A., Inc., Englewood Cliffs, NJ. All rights reserved. "LG" is a registered trademark of LG Corp.

# REFRIGERANT PIPING CONNECTIONS

## Indoor Unit Connections

**Accessing and Positioning the Indoor Unit Piping / Connections (HEV2, HFV3, and HXV2), continued.**

### *Note:*

- *⃠ Do not bend the piping directly backwards or to the left or right sides without bending it downward first; this will damage the indoor unit piping.*
- *⃠ Do not forcibly press the refrigerant piping onto the bottom frame or the front grille; this will damage the indoor unit piping and / or indoor unit frame.*
- *Ensure the piping is straight. ⃠ Do not kink the piping; this will damage the indoor unit and piping.*

Figure 49: Improper Piping Bending.

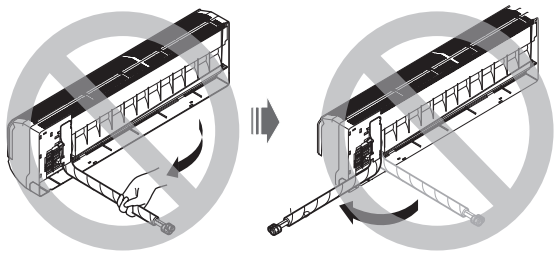

Figure 50: Keep Piping Straight; ⃠ Avoid Kinks.

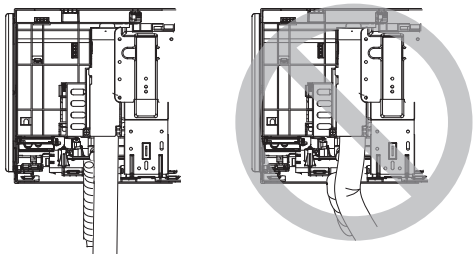

**Piping Installation When Piping is on the Left Side (HEV2, HFV3, and HXV2)**

### *Note:*

- *See the Electrical System Installation section for information on how to connect the communication / connection (power) cable from the outdoor unit.*
- *For left-side piping, it is recommended that the communication / power connections are complete before starting the piping connections.*

1. Insert drain hose on left (feature will differ depending on model of indoor unit).
2. Align the center of the refrigerant piping and corresponding connection as shown on the next page.
3. Place a couple of drops of refrigerant oil on outside of the flare before assembling. ⃠ Do not add any contaminants. Tighten the flare nut initially by hand.
4. Finish tightening the flare nut with a torque wrench until the wrench clicks. Follow torque guidelines in the table on the next page.

### *Note:*

*When tightening the flare nut with a torque wrench, ensure the direction for tightening follows the arrow on the wrench.*

5. Bundle the refrigerant piping, drain hose, and communication / connection (power) cable together. Ensure that the drain hose is located at the bottom of the bundle.
   - If using a conduit for the power wiring / communications cable, see the next page.

Figure 51: Piping Installation When Piping is on the Left Side.

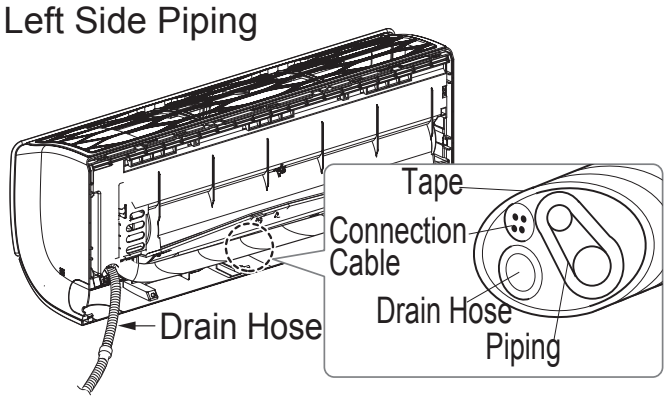


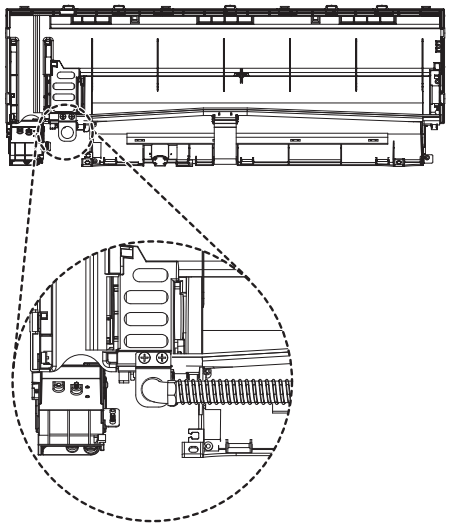

### *Note:*

*Positioning the drain hose at the top of the bundle can cause condensate to overflow from the drain pan in the inside of the indoor unit.*



Due to our policy of continuous product innovation, some specifications may change without notification.
©LG Electronics U.S.A., Inc., Englewood Cliffs, NJ. All rights reserved. "LG" is a registered trademark of LG Corp.

**Accessing and Positioning the Indoor Unit Piping / Connections (HEV2, HFV3, and HXV2), continued.**

**Piping Installation When Piping is on the Right Side (HEV2, HFV3, and HXV2)**

Figure 52: Piping Installation When Piping is on the Right Side.

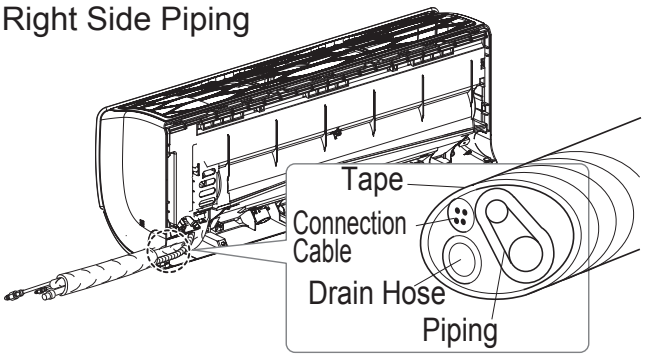


## *Note:*

*See the Electrical System Installation section for information on how to connect the communication / connection (power) wiring from the outdoor unit.*

1. Align the center of the refrigerant piping and corresponding connection as shown.
2. Place a couple of drops of refrigerant oil on outside of the flare before assembling. ⃠ Do not add any contaminants. Tighten the flare nut initially by hand.
3. Finish tightening the flare nut with a torque wrench until the wrench clicks. Follow torque guidelines in the table below.

## *Note:*

*When tightening the flare nut with a torque wrench, ensure the direction for tightening follows the arrow on the wrench.*

4. Bundle the refrigerant piping, drain hose, and communication / connection (power) cable together. Ensure that the drain hose is located at the bottom of the bundle.
   - If using a conduit for the power wiring / communications cable, see below.

## *Note:*

*Positioning the drain hose at the top of the bundle can cause condensate to overflow from the drain pan in the inside of the indoor unit.*

Table 20: Torque Wrench Tightening.

| Pipe Size (in. O.D.) | Outside Diameter (mm) | Torque (ft-lbs.) |
|---|---|---|
| 1/4 | 6.35 | 13.0 - 18.0 |
| 3/8 | 9.52 | 24.6 - 30.4 |
| 1/2 | 12.7 | 39.8 - 47.7 |
| 5/8 | 15.88 | 45.4 - 59.3 |
| 3/4 | 19.05 | 71.5 - 87.5 |

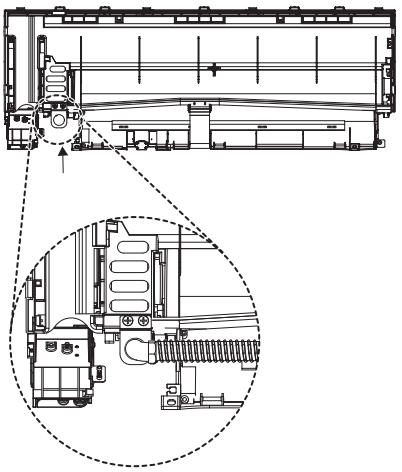

Figure 53: Indoor Unit Connection.

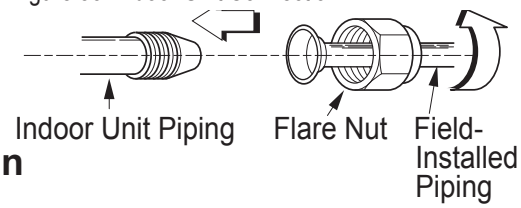


## Using a Conduit for IDU Wiring / Cable Installation

## *Note:*

*Use a liquidtight 3/4 inch elbow connector for flexible conduit.*

1. Prop indoor unit away from wall bracket.
2. Guide communication / connection (power) cable insulation into the conduit.

Figure 54: Liquidtight 3/4 Inch Elbow Connector Attached to Flexible Conduit.

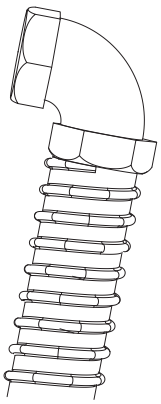

## *Note:*

*Check local, state, and federal codes when choosing a conduit size. See the "Communication / Connection (Power) Cable Specifications from Outdoor Unit to Indoor Unit" in the Electrical System Installation section for information.*

3. Attach conduit using the liquidtight 3/4 inch elbow connector.
4. Reassemble the indoor unit properly onto the wall bracket.
5. If conduit is not used, see pages in this section for refrigerant piping, condensate drain, power wiring / communication cable bundling information.
6. To protect the piping, condensate drain, and conduit from the elements, add a lineset cover from the indoor access hole to the outdoor unit.





Due to our policy of continuous product innovation, some specifications may change without notification.
©LG Electronics U.S.A., Inc., Englewood Cliffs, NJ. All rights reserved. "LG" is a registered trademark of LG Corp.

# REFRIGERANT PIPING CONNECTIONS

Outdoor Unit Drain Piping / Indoor Unit Drain Hose

## ODU Condensate Drain Piping Installation

Depending on the installation location, it could be necessary to install factory-supplied drain plug(s). See the section Outdoor Unit Location Selection for information in reference to ODU placement.

### *Note:*

*Ensure drain piping is insulated. Drain water from the defrost mode will freeze and build up in the outdoor unit, impairing heating performance, and even will damage the outdoor unit.*

Figure 55: HEV2, HFV3 Outdoor Unit Drain Connection Components

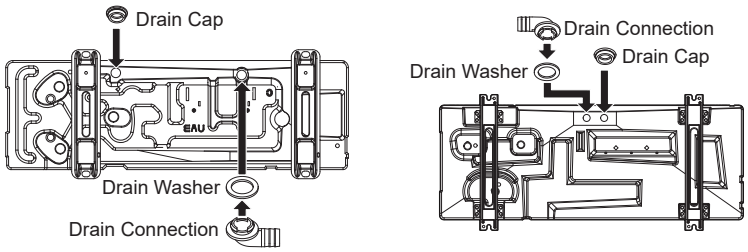


LSU090HEV2, LSU120HEV2 LSU090HFV3, LSU120HFV3

LSU180HEV2, LSU240HEV2 LSU180HFV3, LSU240HFV3

### Installing Outdoor Unit Drain Plug / Piping

1. See diagrams at right for drain connection, drain caps, and drain washer locations specific to each outdoor unit. Components and location differ depending on model of outdoor unit.
2. Connect field-supplied vinyl condensate piping to the outdoor unit drain connection. If the field-supplied vinyl piping is too long, position it to prevent kinks.

### *Note:*

*Check local codes for materials approved for field-suppled condensate drain piping.*

Figure 56: HXV2 ODU Drain Connection Components

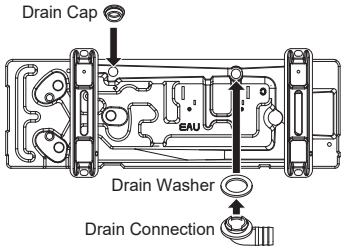


LSU090HXV2, LSU120HXV2

## Choosing the Indoor Unit Condensate Drain Hose Connection Side (HEV2, HFV3, and HXV2)

1. Remove the drain plug on left or right side depending on the piping installation. Insert the drain hose on the left side when left side piping is used; install the drain hose on the right side when right side piping is used.
2. Plug up the unused drain hose hole with a drain cap.
3. Install the drain hose onto the drain connection, and firmly attach it to the indoor unit using a type “E” screw.

Figure 57: Choosing the Location of the Drain Hose Connection (HEV2, HFV3, HXV2).

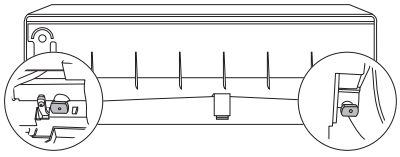

## Condensate Drain Hose Installation; from Indoor Unit to Drain System (HEV2, HFV3, and HXV2)

Figure 58: Installing the Drain Hose.

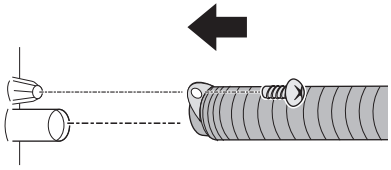

### *Note:*

*Refer to the diagrams and follow proper installation and the position of the drain hose along the refrigerant piping installation path to avoid leaks. After the drain hose is set in place, always follow with leak / pressure testing and deep evacuation procedures of the refrigerant piping to be sure all refrigerant piping is properly installed. Re-check and retest as necessary.*

- Drain hose is routed from the indoor unit through the structure (wall) to the outdoor. It must slope at an angle where it is higher at the indoor unit and lower toward the outdoor area, thereby letting gravity push any condensation down and out.
- The drain hose might need to be extended so that condensate can be properly routed away.
- The drain hose extension must be properly insulated to ensure condensation will not damage walls, floors, etc. Foamed polyethylene or equivalent of at least 5/16 inches thick is required.

Figure 59: Correct Slope Angle for Drain Hose.

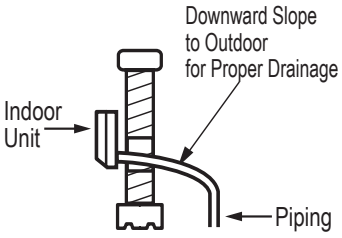


Figure 60: Indoor Unit Drain Hose Extension.

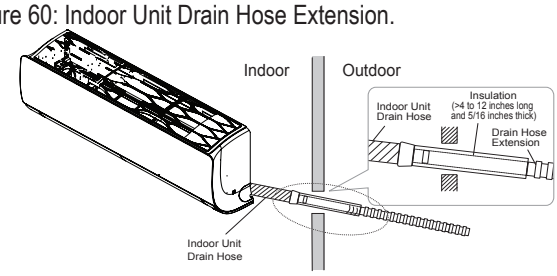




Due to our policy of continuous product innovation, some specifications may change without notification.
©LG Electronics U.S.A., Inc., Englewood Cliffs, NJ. All rights reserved. “LG” is a registered trademark of LG Corp.

**Condensate Drain Hose Installation; from Indoor Unit to Drain System (HEV2, HFV3, and HXV2), continued.**

- Insert the drain hose >two (2) inches so it won't pull out of the field-supplied drain pipe.
- ⃠ Avoid piping the drain hose as shown in the diagrams in the figure below. These methods are incorrect and can cause leaks at the indoor unit site.

Figure 61: Inserting the Drain Hose >Two (2) inches Into the Field-Supplied Drain Pipe.

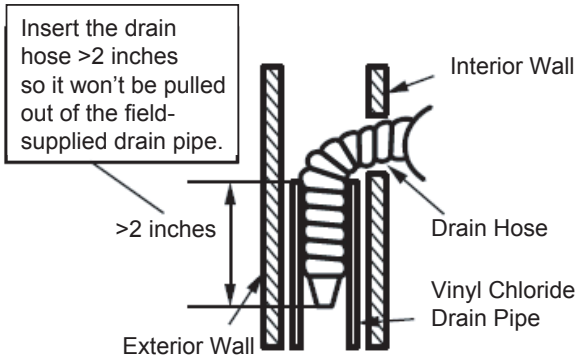


Figure 62: Incorrect Slope Angles for the Drain Hose.

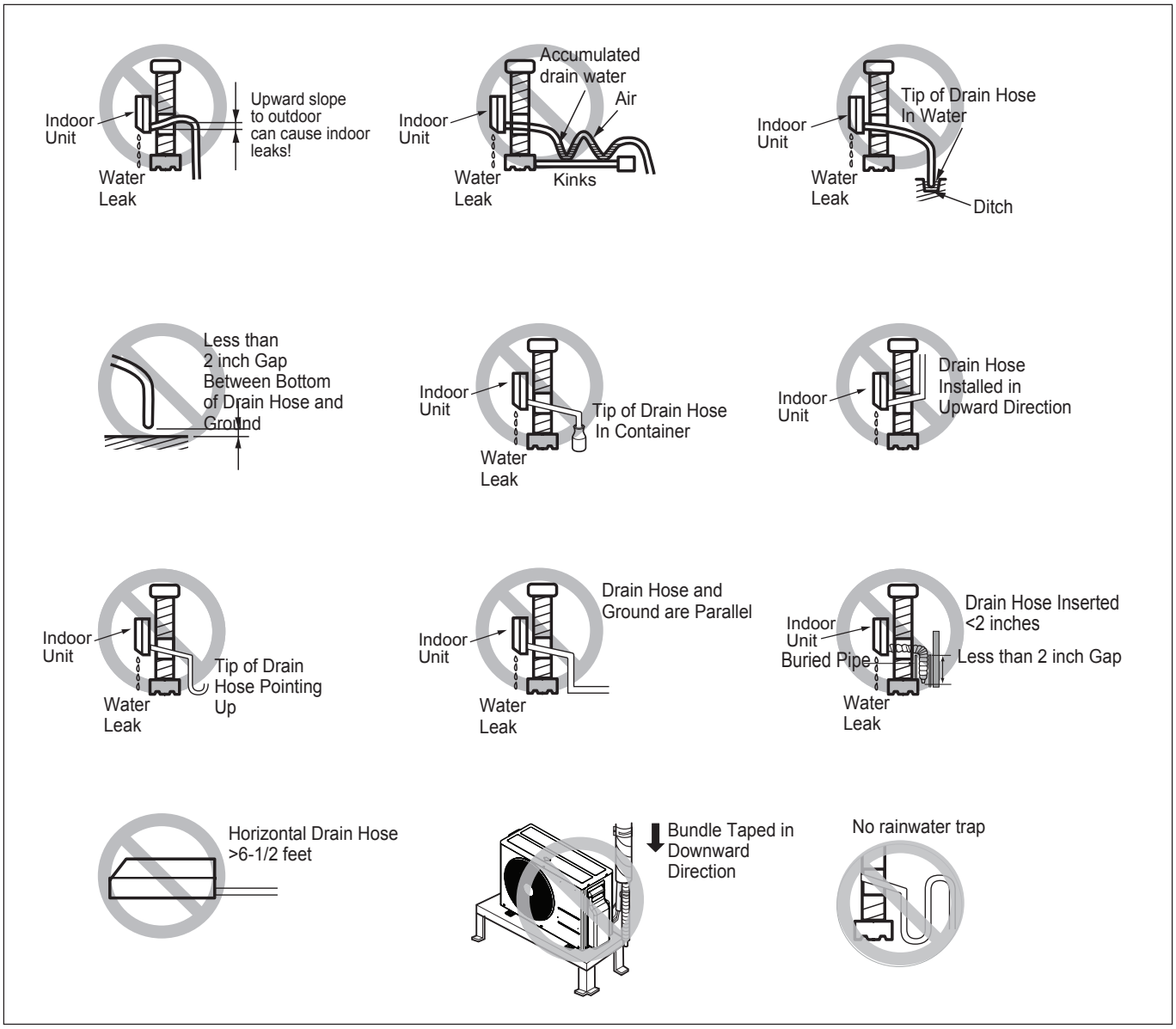






Due to our policy of continuous product innovation, some specifications may change without notification.
©LG Electronics U.S.A., Inc., Englewood Cliffs, NJ. All rights reserved. "LG" is a registered trademark of LG Corp.

# REFRIGERANT PIPING CONNECTIONS

Indoor Unit Drain Hose

## Checking the Indoor Unit Drain Hose for Leaks

1. Pour a glass of water on the evaporator.
2. Verify that the water flows appropriately through and out of the drain hose without any leaks.

## Bundling

If a conduit or piping set cover is not used on the connection from the outdoor unit to the interior, bundle both separately insulated refrigerant pipes, the drain hose, and outdoor unit to indoor unit communication / connection (power) cable together with wide vinyl tape.

1. Both piping must be fully and separately encased in insulation material: Overlap the field installation piping insulation material and the indoor unit piping insulation material.
2. Bind together the two pipes, using vinyl tape. Make sure there are no gaps during the binding.
3. Be sure the cutting line is placed upward.
4. Wrap the rear piping section with narrow vinyl tape.
5. Continue to wrap the indoor unit pipe as connected to the outdoor connection pipe.
6. Using a wider vinyl tape, bundle the piping and drain hose together.
   - Tape must be sufficient to cover the piping in order to fit into the rear piping housing area at the back of the indoor unit.

## *Note:*

- *Always include insulation on all refrigerant and drain piping to ensure condensate does not form and cause damage to walls, floors, etc.*
- *Refer to "Communication / Connection (Power) Cable Specifications from Outdoor Unit to Indoor Unit" in the Electrical System Installation section for information.*

Figure 65: Cutaway of Proper Bundling.

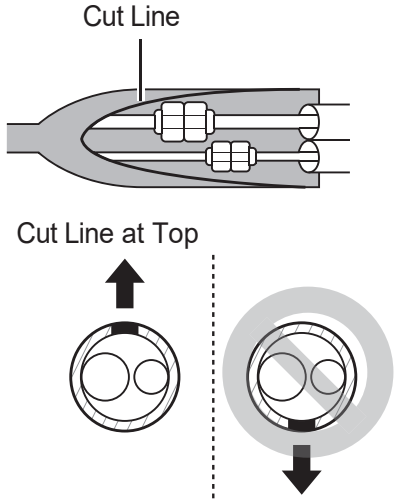


Figure 63: Checking for Leaks at the Indoor Unit.

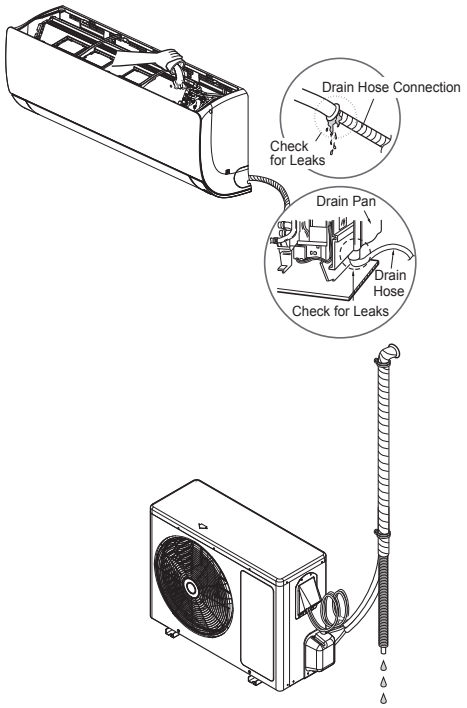


Figure 64: Bundling the Connection Components (From Outdoor Unit to Indoor Unit).

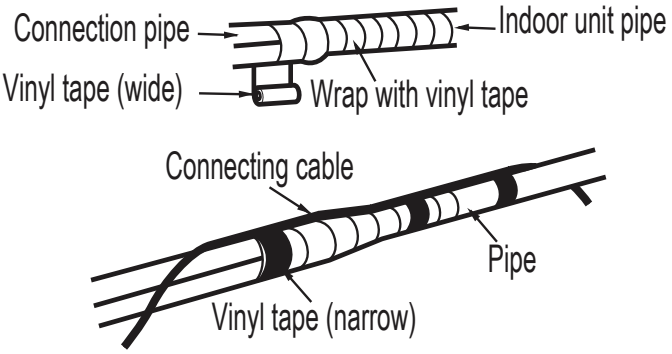


Figure 66: Cutaway of.Proper Pipe and Cable Bundling.

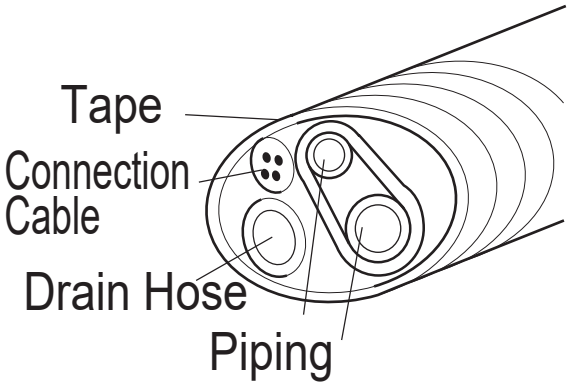




Due to our policy of continuous product innovation, some specifications may change without notification.
©LG Electronics U.S.A., Inc., Englewood Cliffs, NJ. All rights reserved. "LG" is a registered trademark of LG Corp.

## Refrigerant Piping System Insulation

***Note:***

*For information regarding insulation for underground or penetration situations, see the "General Refrigerant Piping System Information" section.*

All refrigerant piping from the outdoor unit to the indoor units must be insulated correctly for safety and usage. Refrigerant piping, field-provided isolation ball valves (if present), service valves, and elbows must be properly and completely insulated using closed cell pipe insulation (up to the indoor unit piping connections). To prevent heat loss / heat gain through the refrigerant piping, all refrigerant piping including liquid lines and vapor lines must be insulated separately. Insulation must be a minimum 1/2 inches thick, and thickness will need to be increased based on ambient conditions and local codes. Table on next page lists minimum wall thickness requirements for Ethylene Propylene Diene Methylene (EPDM) insulation.

Inside the outdoor unit, maximum pipe temperature is 248°F and minimum pipe temperature is -40°F. For field insulation of refrigerant piping between outdoor units and indoor units, consider the following pipe temperature ranges for an operating heat pump system:

- Heating mode refrigerant temperature ranges: Liquid = 75 to 118°F; High Pressure Vapor = 95 to 220°F
- Cooling mode refrigerant temperature ranges: Liquid = 75 to 118°F; Low Pressure Vapor = 40 to 90°F

All insulation joints must be glued with no air gaps. Insulation material must fit snugly against the refrigeration pipe with no air space between it and the pipe. ⃠ Do not allow insulation passing through pipe hangers, inside conduit, and/or sleeves to be compressed. Protect insulation inside hangers and supports with a second layer. All pipe insulation exposed to the sun and outdoor elements must be properly protected with PVC, aluminum vapor barrier, or alternatively placed in a weather-resistant enclosure such as a pipe rack with a top cover; and meet local codes.

Figure 67: Typical Insulation Butt-Joint at Indoor Unit Casing.

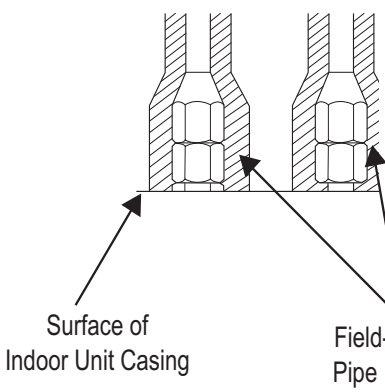


Figure 68: Typical Refrigerant Flare Fitting Insulation Detail.

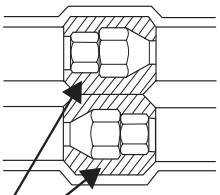

Figure 69: Insulating the Shut Off / Insulation Ball Valve (If Present).

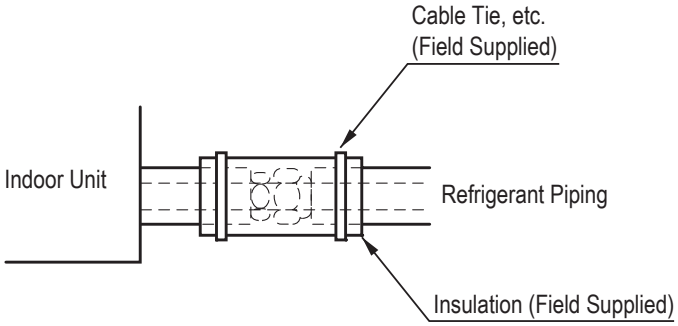


***Note:***

*Always include plenty of insulation on all refrigerant and drain piping to ensure condensate does not form and cause damage to walls, floors, etc.*



Due to our policy of continuous product innovation, some specifications may change without notification.
©LG Electronics U.S.A., Inc., Englewood Cliffs, NJ. All rights reserved. "LG" is a registered trademark of LG Corp.

# INSULATION

### Minimum Refrigerant Pipe Ethylene Propylene Diene Methylene (EPDM) Insulation Wall Thickness Requirements

***Note:***

- *⃠ Do not insulate gas and liquid pipes together as this can result in pipe leakage and malfunction due to extreme temperature fluctuations.*
- *Always properly insulate the piping. Insufficient insulation will result in condensation, reduced heating/cooling performance, etc. Also, if the pipes aren't insulated properly, condensation could potentially cause damage to building finishes. Pay special attention to insulating the pipes installed in the ceiling plenum.*
- *Fully insulate the piping connections.*
- *Follow locals codes and the designer's instructions when selecting ethylene propylene diene methylene (EPDM) insulation wall thickness.*

Table 21: Minimum Refrigerant Pipe EPDM Insulation Wall Thickness Requirements.[1]

<table>
<tr><th colspan="2" rowspan="2">Classification / Piping O.D.</th><th colspan="2">Air-conditioned location</th><th colspan="2">Non-air conditioned location</th></tr>
<tr><th>1. Typical Conditioned Location</th><th>2. Special Conditioned Location</th><th>3. Typical Unconditioned Location</th><th>4. Special Unconditioned Location</th></tr>
<tr><td rowspan="2">Liquid pipe</td><td>ø1/4 inch</td><td rowspan="2">>1/2 inches</td><td rowspan="2">>1/2 inches</td><td rowspan="2">>1/2 inches</td><td rowspan="2">>1/2 inches</td></tr>
<tr><td>ø3/8 inch</td></tr>
<tr><td></td><td>≥ø1/2 inch</td><td>>1/2 inches</td><td>>1/2 inches</td><td>>1/2 inches</td><td>>1/2 inches</td></tr>
<tr><td rowspan="12">Vapor pipe</td><td>ø3/8 inch</td><td rowspan="6">>1/2 inches</td><td rowspan="8">>3/4 inches</td><td rowspan="8">>3/4 inches</td><td rowspan="12">>1 inch</td></tr>
<tr><td>ø1/2 inch</td></tr>
<tr><td>ø5/8 inch</td></tr>
<tr><td>ø3/4 inch</td></tr>
<tr><td>ø7/8 inch</td></tr>
<tr><td>ø1 inch</td></tr>
<tr><td>ø1-1/8 inches</td><td rowspan="5">>3/4 inches</td></tr>
<tr><td>ø1-1/4 inches</td><td rowspan="5">>1 inch</td><td rowspan="5">>1 inch</td></tr>
<tr><td>ø1-3/8 inches</td></tr>
<tr><td>ø1-1/2 inches</td></tr>
<tr><td>ø1-3/4 inches</td></tr>
</table>

*[1]The thickness of the above insulation material is based on heat conductivity of 0.61 Btu/in/h/ft²/°F.*

**1. Typical Conditioned Location**

A building plenum or space that contains conditioned air that does not exceed 80°F DB.

**2. Special Conditioned Location**

1. When the location is air conditioned, but there is severe temperature/humidity difference due to high ceilings.
   - Church, auditorium, theater, lobby, etc.
2. When the location is air conditioned, but internal temperature/humidity are high.
   - Bathroom, swimming pool, locker room, etc.

**3. Typical Unconditioned Location**

An unconditioned space inside a building.

**4. Special Unconditioned Location: If conditions 1 and 2 below are present.**

1. An unconditioned space or plenum of a building.
2. An area where there is an elevated humidity level.

**5. Additional Insulation for Indoor Units May be Required in Humid Environments.**

The air conditioner factory insulation has been tested according to "ISO Conditions with Mist," and it satisfies the requirements. If the system has been operating for a long time in a high humidity environment (dew point temperature: more than 73°F), condensate is likely to form. If this happens, install 3/8 inch thick EPDM insulation that is plenum-rated with a heat-resistance factor of more than 248°F.



Due to our policy of continuous product innovation, some specifications may change without notification.
©LG Electronics U.S.A., Inc., Englewood Cliffs, NJ. All rights reserved. "LG" is a registered trademark of LG Corp.

### ⚠ WARNING

**LS090-120HEV2, LS090-120HFV3, and LS090-120HXV2 indoor units and outdoor units have similar frames; however, LS090-120HEV2 and LS090-120HFV3 systems require 208-230V, 60Hz, 1ph power supply. LS090-120HXV2 systems require 115V, 60Hz, 1ph power supply. Verify which system is being installed. An incorrect power supply will result in electric shock, fire, physical injury, or death.**

### ⚠ WARNING

- *All power wiring and communication cable installation must be performed by trained service providers working in accordance with local, state, and National Electrical Code (NEC) / UL / ETL federal regulations related to electrical equipment and wiring, and following the manufacturer product diagrams, requirements, and instructions in this manual. Failure to do so will lead to electric shock which can cause physical injury or death.*
- *Verify that main power to the unit is completely off before proceeding. Follow all safety and warning information outlined at the beginning of this manual. Failure to do so will cause electric shock and bodily injury or death.*
- *Familiarize yourself with the location of the circuit breaker. Be sure that a circuit breaker or some other emergency power cutoff device is in place before any power wiring is done to the system. Failure to do so will cause bodily injury or death.*
- ⃠ *Never touch any power lines or live cables before all power is cutoff to the system. To do so will cause bodily injury or death.*
- *Undersized wiring will lead to unacceptable voltage at the unit and will cause a fire, which will cause bodily injury or death.*
- *Properly ground the Single Zone outdoor and indoor units. Ground wiring is required to prevent accidental electrical shock, bodily injury, and death during current leakage.*
- *Ground wiring must always be installed by a trained technician.*
- *Install appropriately sized breakers / fuses / overcurrent protection switches and wiring in accordance with local, state, and NEC regulations related to electrical equipment and wiring, and following the instructions in this manual. Using an oversized breaker or fuse will result in electric shock, physical injury or death.*
- ⃠ *Do not connect ground wire to refrigerant, gas, or water piping; to lightning rods; to telephone ground wiring; or to the building plumbing system. Failure to properly provide a NEC-approved earth ground will result in electric shock, fire, physical injury or death.*

## *Note:*

- *Consider ambient conditions (temperature, direct sunlight, inclement weather, etc.) when selecting, installing, and connecting the power wiring.*
- *Properly ground the Single Zone outdoor and indoor unit. Improperly connected ground wire can cause communication problems from electrical noise and motor current leakage. Ground wiring must always be installed by a trained technician.*
- *Install appropriately sized breakers / fuses / overcurrent protection switches and wiring in accordance with local, state, and NEC regulations related to electrical equipment and wiring, and following the instructions in this manual. Using an oversized breaker or fuse will result in equipment malfunction and property damage.*
- ⃠ *Do not connect ground wire to refrigerant, gas, or water piping; to lightning rods; to telephone ground wiring; or to the building plumbing system. Failure to properly provide a NEC-approved earth ground can result in property damage and equipment malfunction.*
- ⃠ *Do not operate the air conditioning system until the refrigerant piping installation is complete. Operating the system before refrigerant piping is finalized will damage the compressor.*

## Power Wiring / Communication Cable Connections

Best practice dictates using solderless ring or fork terminals at all power wiring and communication cable terminations. Use copper bearing ring or fork terminals; ⃠ do not use galvanized or nickel plate over steel. Use appropriate crimping tool to attach the ring or fork terminals at all power wiring and control cable terminations.

Figure 70: Close up of a Typical Ring Terminal.

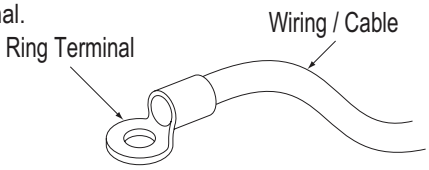


### To Install a Ring or Fork Terminal:

1. Trim the wiring with wire cutters or pliers, then strip the insulation to expose the strand wiring to about 3/8 inches.
2. Using a ring terminal fastener or pliers, securely clamp a ring terminal to each stripped wire end.

Figure 71: Distance Between the Terminal Connections.

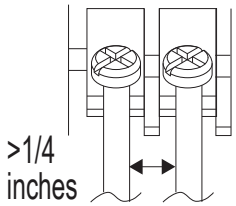






Due to our policy of continuous product innovation, some specifications may change without notification.
©LG Electronics U.S.A., Inc., Englewood Cliffs, NJ. All rights reserved. "LG" is a registered trademark of LG Corp.

# ELECTRICAL SYSTEM INSTALLATION

Connections and Specifications

## Power Wiring / Communication Cable Connections, continued

**To Connect the Wiring to the Terminals:**

1. Remove the JIS terminal screws from the (outdoor unit or indoor unit) terminal plate with a JIS screwdriver. (See information about LG terminal connections below.)
2. Position the ring terminal around the terminal, place the terminal screw in the ring, and tighten to the terminal plate using a JIS screwdriver.
   - Firmly attach the wire; secure in a way to prevent external forces from being imparted to the terminal block.
   - Use an appropriately sized JIS screwdriver for tightening the terminals.
   - ⃠ Do not overtighten the connections; overtightening will damage the terminals.

If ring terminals or fork terminals are not available, then:

- ⃠ Do not terminate different gauge wires to the power terminal block. (Slack in the wiring will generate heat.)
- When terminating wires of the same thickness, follow the instructions demonstrated in the figures below.

Figure 72: Adding a Ring Terminal to the Wiring.

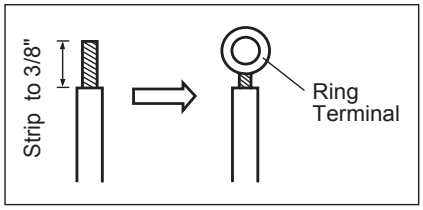


Figure 73: Tightening the Ring Terminal to the Terminal Plate.

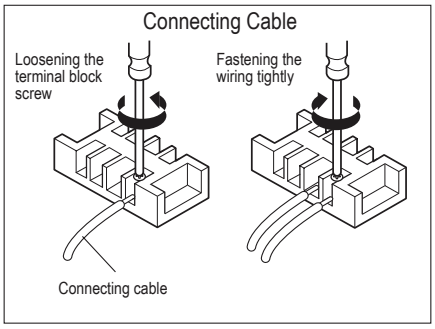


### ⚠ WARNING

*If power wires are not properly terminated and firmly attached, there is risk of fire, electric shock, and physical injury or death.*

### *Note:*

- ⃠ *Never apply line voltage power to the communications cable terminal block. If contact is made, the PCBs will be damaged.*
- *Always include some allowance in the wiring length when terminating. Firmly attach the wiring or cable, but provide some slack to facilitate removing the electrical panels while servicing, and to prevent external forces from damaging the terminal block.*

Figure 74: Proper and Improper Power Wiring Connections.

● :Copper Wire

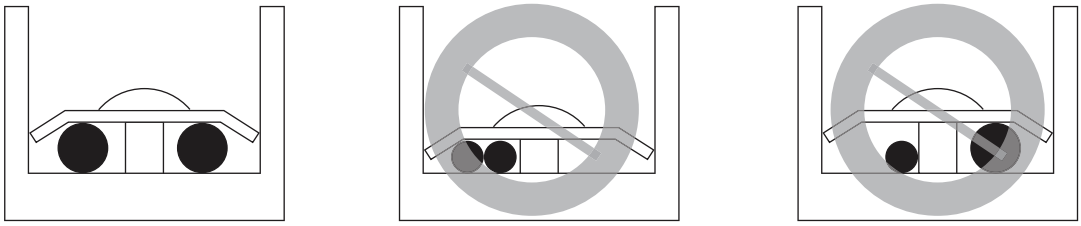

Terminate multiple power wires of the same gauge to both sides.

⃠ Do not terminate two wires on one side.

⃠ Do not terminate different gauge wires to a terminal block.

## Terminal Connections

LG uses a "JIS" type of screw for all terminals; use a JIS screwdriver to tighten and loosen these screws and ⃠ avoid damaging the terminal. ⃠ Do not overtighten the connections — overtightening will damage the terminals — but firmly and securely attach the wiring in a way to prevent external forces from being imparted to the terminal block.

Figure 75: JIS Screws.

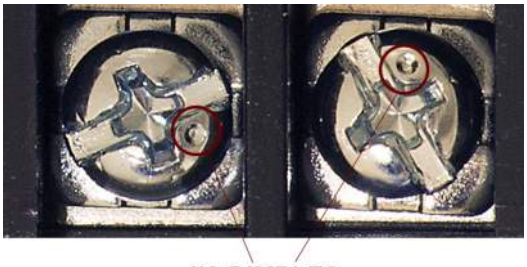

JIS DIMPLES

### *Note:*

- *The terminals labeled "GND" are NOT ground terminals. The terminals labeled ⏚ ARE ground terminals.*
- *Polarity matters. Always connect "A" to "A" and "B" to "B."*
- ⃠ *Do not include splices or wire nuts in the communication cable.*



Due to our policy of continuous product innovation, some specifications may change without notification.
©LG Electronics U.S.A., Inc., Englewood Cliffs, NJ. All rights reserved. "LG" is a registered trademark of LG Corp.

**⚠WARNING**

**LS090-120HEV2, LS090-120HFV3, and LS090-120HXV2 indoor units and outdoor units have similar frames; however, LS090-120HEV2 and LS090-120HFV3 systems require 208-230V, 60Hz, 1ph power supply. LS090-120HXV2 systems require 115V, 60Hz, 1ph power supply. Verify which system is being installed. An incorrect power supply will result in electric shock, fire, physical injury, or death.**

## Power Supply / Power Wiring Specifications

- **HEV2 and HFV3 systems operate at 1Ø, 208-230V, 60Hz.**
- **HXV2 systems operate at 1Ø, 115V, 60Hz**
- Power wiring / power wiring gauge to the outdoor unit(s) must be solid or stranded, and must comply with all National Electrical Code (NEC), UL, and local electrical codes.
- The indoor unit is powered by the outdoor unit.
- Power supply, wire types and sizes, and circuit breaker must be selected based on NEC, UL, and local codes. Maximum allowable voltage fluctuation ±10% or nameplate rated value.
- Properly ground the outdoor unit and indoor unit per NEC, UL, and local codes.
- Ground wire must be longer than the common power / communication wires.
- Connect the wiring firmly so the wires cannot be easily pulled out.
- Refer to the inside of the chassis cover or control cover for circuit and terminal block diagrams.
- Always match color codes of each wire and follow wiring diagram.
- ⃠ Do not install power wiring to the outdoor unit and the communication / connection (power) cable to the indoor unit in the same conduit. Use separate conduits.

Figure 77: Single Zone Outdoor Unit Power Wiring Diagram.

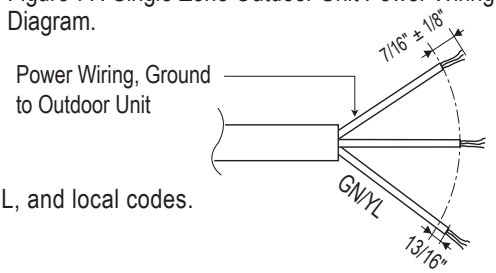


Figure 76: Power Wiring Conduit.

**⚠DANGER**

*Refer to Electrical Data table for ampere ratings. Properly size all circuit breakers / fuses, wiring and field provided components per local codes. There is risk of fire, electric shock, explosion, physical injury or death.*

**⚠WARNING**

- *All power wiring installation must be performed by trained service providers working in accordance with local, state, and NEC regulations related to electrical equipment and wiring, and following the instructions in this manual. Failure to do so will lead to electric shock and bodily injury or death.*
- *Use specified wiring for connections, and ensure that external force is not imparted to terminal connections. It will generate heat and / or cause a fire, resulting in physical injury or death.*
- *Use heat-proof electrical wire capable of withstanding temperatures up to 167°F to avoid wiring malfunction and electrical shock, which will cause physical injury or death.*
- *Install appropriately sized breakers / fuses / overcurrent protection switches and wiring in accordance with local, state, and NEC regulation related to electrical equipment and wiring, and following the instructions in this manual. Generated overcurrent will include some amount of direct current. Using an oversized breaker or fuse will result in electric shock, physical injury or death.*
- *Use the appropriate type of overcurrent protection. Generated overcurrent will include some amount of direct current, and if the appropriate type of overcurrent protection is not installed, there is a risk of fire, electric shock, and physical injury or death.*
- *Ground wiring is required to prevent accidental electrical shock during current leakage, communication problems from electrical noise, and motor current leakage. ⃠ Do not connect the ground line to the pipes. There is risk of fire, electric shock, explosion, physical injury or death.*
- *Per code, install a main indoor breaker, and an outdoor service disconnect that interrupts all power sources simultaneously. There is risk of fire, electric shock, explosion, physical injury or death.*

## *Note:*

- *If there is a possibility of momentary blackout, or the power goes on and off while the system is operating, install a field-supplied phase loss protection circuit. If not, the compressor and other components will be damaged.*
- *Use heat-proof electrical wire capable of withstanding temperatures up to 167°F to avoid damage to unit.*
- *Install appropriately sized breakers / fuses / overcurrent protection switches and wiring in accordance with local, state, and NEC regulations related to electrical equipment and wiring, and following the instructions in this manual. Generated overcurrent will include some amount of direct current. Using an oversized breaker or fuse will result in equipment malfunction and property damage.*
- ⃠ *Do not connect ground wire to refrigerant, gas, or water piping; to lightning rods; to telephone ground wiring; or to the building plumbing system. Failure to properly provide a NEC approved earth ground can result in property damage and equipment malfunction.*





Due to our policy of continuous product innovation, some specifications may change without notification.
©LG Electronics U.S.A., Inc., Englewood Cliffs, NJ. All rights reserved. "LG" is a registered trademark of LG Corp.

# ELECTRICAL SYSTEM INSTALLATION

Connections and Specifications

## Communication / Connection (Power) Cable Specifications from Outdoor Unit to Indoor Unit

- For communication / connection (power) wires between the Single Zone outdoor unit and the indoor unit, use a minimum 14 gauge, four (4) conductor, stranded, shielded or unshielded wire. If shielded, the wire must be grounded to the chassis at the outdoor unit only.
- Insulation material as required by local code.
- Firmly attach the cable; provide slack but secure in a way to prevent external forces from being imparted on the terminal block.
- Wiring must be completed without splices.

### *Note:*

- *Always verify the communication cable is connected to a communications terminal on the Single Zone unit. ⃠ Never apply line voltage power to the communication cable connection. If contact is made, the PCBs will be damaged.*
- *The shield of the communications cable connecting the outdoor unit to the indoor unit must be grounded only to the outdoor unit frame.*
- *Tie the shield of each cable segment together using a wire nut at the indoor unit. Maintain polarity throughout the communication network.*
- *Position the incoming power to the outdoor unit away from the power / communications cables from the outdoor unit to the indoor unit.*
- *⃠ Never use a common multiple-core communications cable.*

Figure 78: Typical Single Zone Outdoor Unit to Indoor Unit Wiring and Communications Cable Diagram.

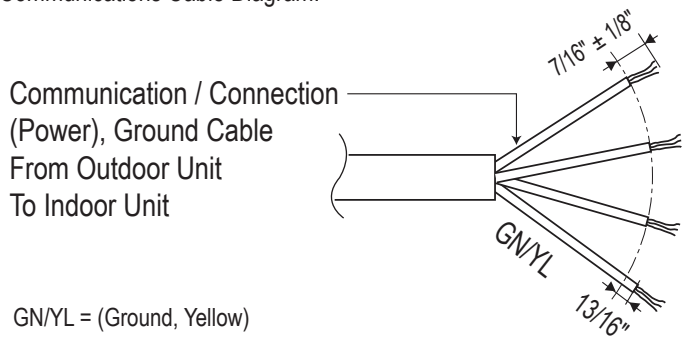


GN/YL = (Ground, Yellow)

**⚠ WARNING**

*All power wiring and communication cable installation must be performed by trained service providers working in accordance with local, state, and National Electrical Code (NEC) / UL / ETL federal regulations related to electrical equipment and wiring, and following the manufacturer product diagrams, requirements, and instructions in this manual. Failure to do so will lead to electric shock which can cause physical injury or death.*



Due to our policy of continuous product innovation, some specifications may change without notification.
©LG Electronics U.S.A., Inc., Englewood Cliffs, NJ. All rights reserved. "LG" is a registered trademark of LG Corp.

Figure 79: LS090HEV2, LS120HEV2, LS090HFV3, LS120HFV3 Power / Communication System Diagram.

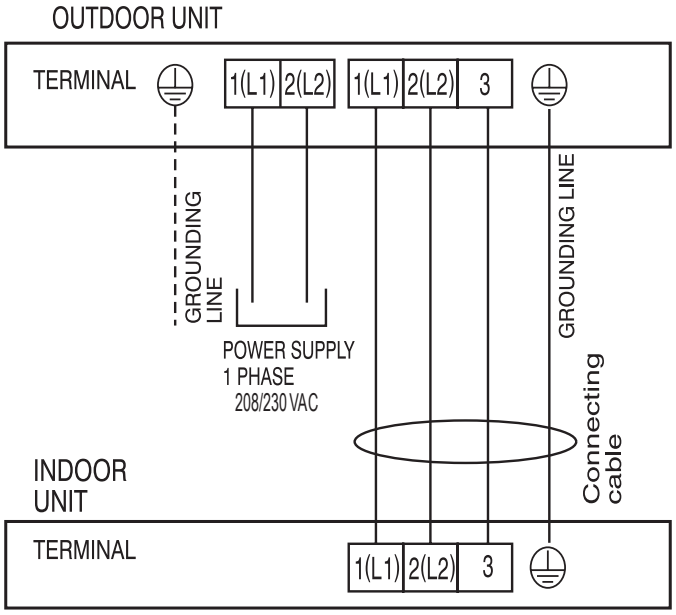


Figure 80: LS180HEV2, LS240HEV2, LS180HFV3, LS240HFV3 Power / Communication System Diagram.

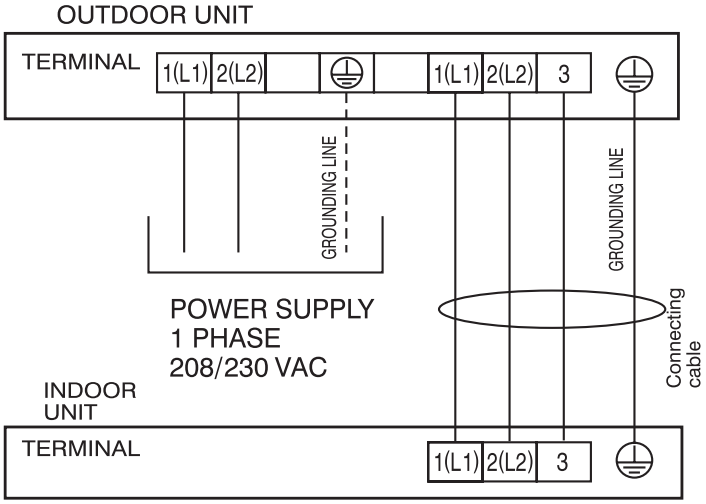


Figure 81: LS090-120HXV2 Power / Communication System Diagram.

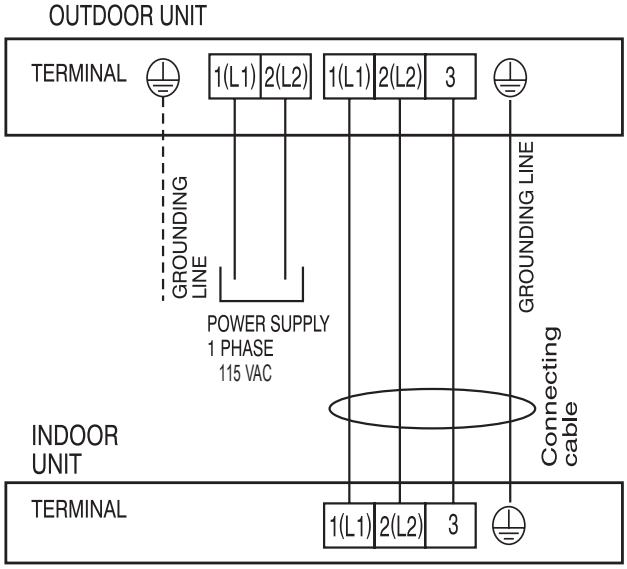






Due to our policy of continuous product innovation, some specifications may change without notification.
©LG Electronics U.S.A., Inc., Englewood Cliffs, NJ. All rights reserved. "LG" is a registered trademark of LG Corp.

# ELECTRICAL SYSTEM INSTALLATION

Controller Options

## Controller Options

Single Zone Mega, Standard Efficiency, and Mega 115V Wall Mount systems include a wireless handheld remote controller (Model No. AKB74955602). Optional LG-suppled wired controllers are available. See "Functions, Controls, Options" in the Single Zone HEV2, HFV3, HXV2 Wall Mounted Engineering Manual", or contact an LG representative for more information.

Figure 82: AKB74955602 Wireless Handheld Remote Controller.

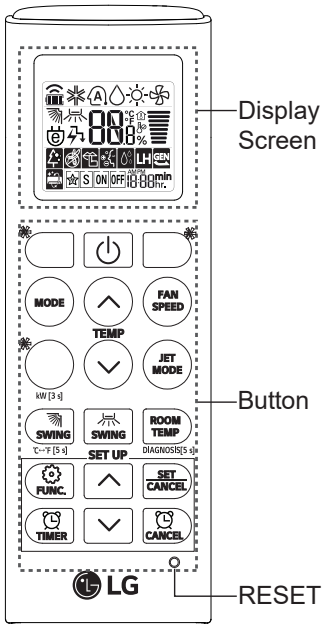


### Wireless Handheld Remote Controller features:

- Display Panel: Displays operation conditions.
- On / Off Button: Turns system operation on and off.
- Mode Button: Selects the operation mode: Cooling, Heating, Auto, Dry (Dehumidification), or Fan.
- Temp Up / Down Buttons: Adjusts the desired room temperature in the different modes.
- Fan Speed Button: Sets desired fan speed.
- Reset: Initializes the handheld remote control settings.

### Wired Controller Connections

Optional controllers (see "Functions, Controls, Options", in the Single Zone HEV2, HFV3, HXV2 Wall Mounted Engineering Manual" or contact an LG representative for more information) can connect to the Single Zone Mega, Standard Efficiency, and Mega 115V Wall Mount indoor units in one of two different ways.

1. LG Wired Remote Extension Cable with Molex plug (PZCWRC1; sold separately) that connects to the CN-REMO terminal on the indoor unit PCB.

2. Field-supplied controller cable that connects to the indoor unit terminal block (must be at least UL2547 or UL1007, and at least FT-6 rated if local electric and building codes require plenum cable usage). Communication cable from indoor unit to remote controller(s) is to be 22 AWG, 3-conductor, twisted, stranded, unshielded. Wiring must comply with all applicable local and national codes.

Figure 83: PZCWRC1 LG Wired Remote Extension Cable.

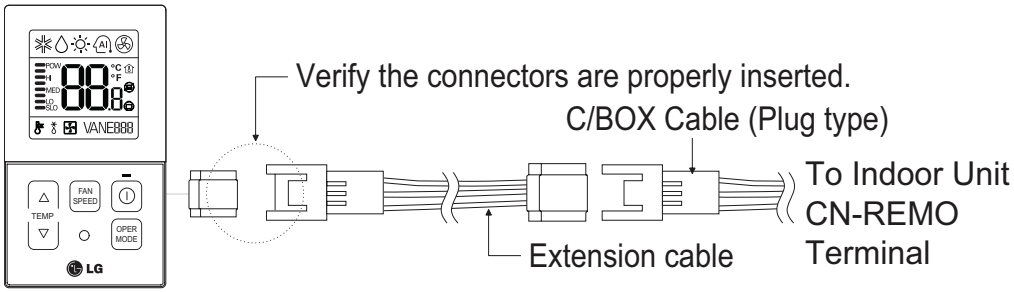


Figure 84: Wired Controller Connection on the Indoor Unit Terminal Block (Appearances and Terminal Placement Will Vary Depending on Model).

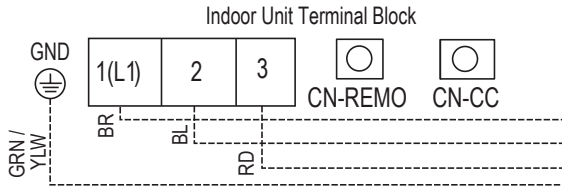


### *Note:*

*When using field-supplied controller cable, make sure to connect the yellow to yellow (communications wire), red to red (12V power wire), and black to black (ground wire) terminals from the remote controller to the indoor unit terminal blocks.*



Due to our policy of continuous product innovation, some specifications may change without notification.
©LG Electronics U.S.A., Inc., Englewood Cliffs, NJ. All rights reserved. "LG" is a registered trademark of LG Corp.

## Connecting Indoor Unit Electrical Wiring (HEV2, HFV3, and HXV2)

**⚠ WARNING**

- *Verify that main power to the unit is completely off before proceeding with these steps as there is a risk of electrical shock, bodily injury, and / or death.*
- *Follow all safety and warning information outlined at the beginning and throughout this manual. Failure to do so will cause electrical shock, bodily injury, and / or death.*

### *Note:*

- *Follow all safety and warning information outlined at the beginning and throughout this manual. Failure to do so will cause unit failure.*
- *Connect the communication / connection (power) cable to the indoor unit by matching the terminals on the outdoor unit control board. Verify the color of the wires at the outdoor unit, along with the terminal numbers, match those for the indoor unit.*
- *Images are representative; actual appearance will vary.*
- *Refer to the circuit diagram on the indoor unit bottom cover.*

1. The bottom panel must have already been removed. If it hasn't been removed, unsnap the bottom cover at its top left and right sides (Location 1).

2. Unsnap each of the three (3) or four (4) small C-hooks located in the middle of the bottom cover (Location 2). Number of C-hooks present depends on model of indoor unit.

3. Lift the three (3) to four (4) hinges on the bottom cover up and out of the channels molded to the left, right, and middle of the indoor unit (Location 3). Number of hinges present depends on model of indoor unit.

4. Set aside the bottom cover to re-install after all procedures are complete.

5. Terminal block is located at the front bottom-right—hand side of the indoor unit. To access the terminals, unscrew the metal control cover screw (if applicable), and raise the metal control cover.

6. Using a JIS screwdriver, connect the cable terminals to the terminal block. Ensure wire color and terminal number of the indoor unit matches those of the outdoor unit. Refer to the wiring diagram on the inside of the bottom cover.

7. Choice of the cable path out of the indoor unit and to the outdoor unit depends on refrigerant piping / drain hose installation: left side piping, following back of indoor unit; right side piping, through the knockout hole; or rear piping.

**⚠ WARNING**

**LS090-120HEV2, LS090-120HFV3, and LS090-120HXV2 indoor units and outdoor units have similar frames; however, LS090-120HEV2 and LS090-120HFV3 systems require 208-230V, 60Hz, 1ph power supply. LS090-120HXV2 systems require 115V, 60Hz, 1ph power supply. Verify which system is being installed. An incorrect power supply will result in electric shock, fire, physical injury, or death.**

Figure 85: Steps to Removing the Bottom Cover.

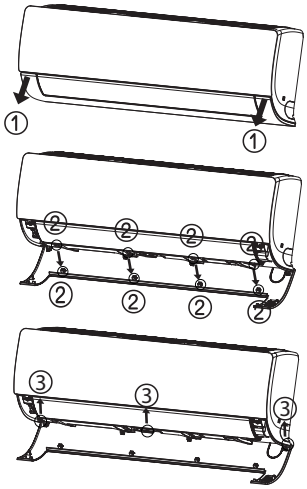


Figure 86: Removing the Bottom Cover (Appearances Will Vary Depending on Indoor Unit Model).

Figure 87: Location of the Indoor Unit Terminal Block.

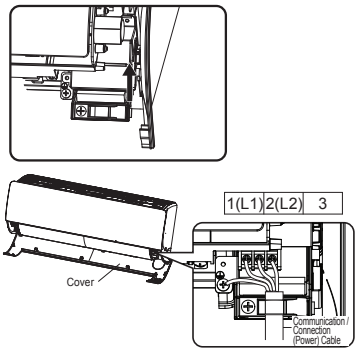


Figure 88: Terminal Cover Down.

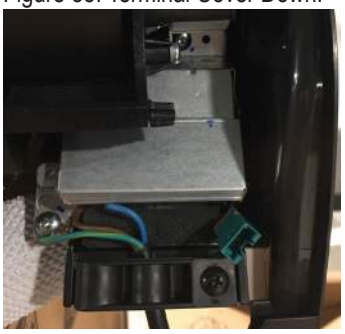

Figure 89: Terminal Cover Up.

Due to our policy of continuous product innovation, some specifications may change without notification.
©LG Electronics U.S.A., Inc., Englewood Cliffs, NJ. All rights reserved. "LG" is a registered trademark of LG Corp.

# ELECTRICAL SYSTEM INSTALLATION

## Indoor Unit Electrical Connections

Cable Installation When Piping is on the Left Side:

- Insert the communication / connection (power) cable through the bottom of the indoor unit,
- Connect the terminals to the terminal block.
- Secure the cable onto the terminal block with the cable retainer.
- Secure the refrigerant piping, drain hose, and communication / connection (power) cable together using cable ties and conduit, or by the bundling method.

### *Note:*

- *Each wire must be securely attached to the terminal block.*
- *Ground cable must be longer than the other wires.*
- *Secure the cable onto the control board using a cable tie.*
- *Use a conduit to protect the cable / refrigerant piping from the indoor unit to the outdoor unit.*

Cable Installation When Piping is on the Right Side:

- Connect the terminals to the terminal block.
- Secure the cable onto the terminal block with the cable retainer.
- Secure the refrigerant piping, drain hose, and communication / connection (power) cable together using cable ties and conduit, or by the bundling method.

### *Note:*

*Position the drain hose at the bottom. Positioning the drain hose at the top of the bundle can cause condensate to overflow from the drain pan in the inside of the indoor unit.*

### *Note:*

*For more information on conduits or the bundling method, see the Refrigerant Piping Connection section.*

8. Reattach the metal control cover using the screw (if applicable).

Figure 90: Cable / Refrigerant Piping / Drain Hose Installation Options.

### Wiring When Piping is on the Left Side

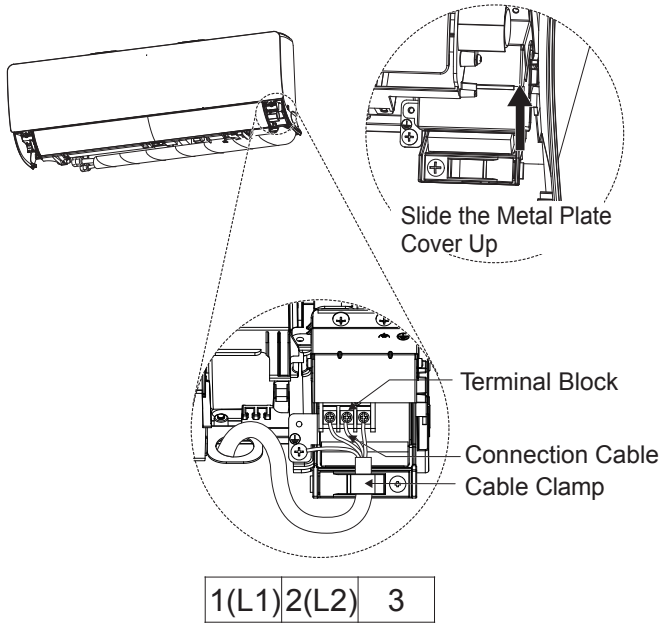


### Wiring When Piping is on the Right Side

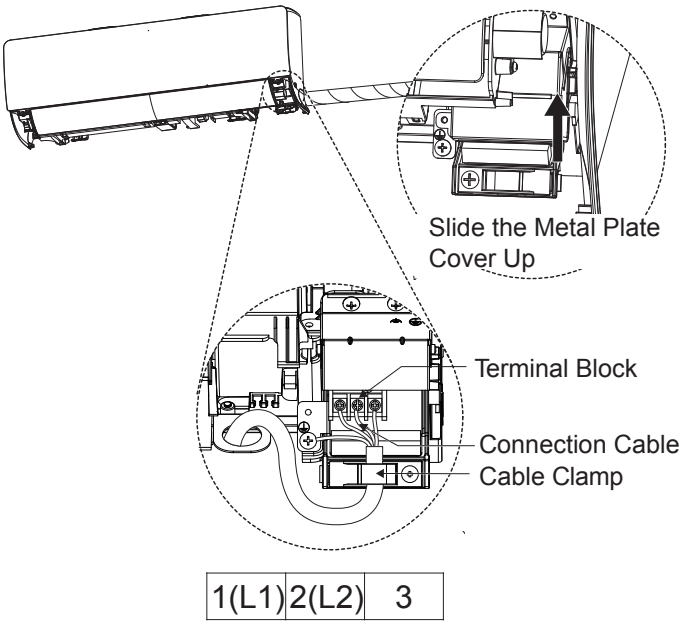


**⚠ WARNING**

**LS090-120HEV2, LS090-120HFV3 and LS090-120HXV2 indoor units and outdoor units have similar frames; however, LS090-120HEV2 and LS090-120HFV3 systems require 208-230V, 60Hz, 1ph power supply. LS090-120HXV2 systems require 115V, 60Hz, 1ph power supply. Verify which system is being installed. An incorrect power supply will result in electric shock, fire, physical injury, or death.**



Due to our policy of continuous product innovation, some specifications may change without notification.
©LG Electronics U.S.A., Inc., Englewood Cliffs, NJ. All rights reserved. "LG" is a registered trademark of LG Corp.

## Connecting Outdoor Unit Wiring

**⚠ WARNING**

- *Verify that main power is completely off and that no power is going through the Single Zone system before proceeding with these steps. Follow all safety and warning information outlined at the beginning of this manual. Failure to do so will cause electric shock, bodily injury and / or death.*
- *Per code, install a main indoor breaker, and an outdoor service disconnect that interrupts all power sources simultaneously. There is risk of fire, electric shock, explosion, physical injury or death.*
- *Verify that the circuit breaker or some other emergency power cutoff device is in place before any power wiring is done to the system. Failure to do so will cause electric shock, bodily injury and / or death.*
- ⃠ *Never touch any power lines or live cables before all power is cutoff to the system. To do so will cause bodily injury or death.*

1. Using a Phillips head screwdriver, remove the piping / control box cover or control box cover (depends on model) from the outdoor unit.

2. Inspect all wiring inside the chassis to be sure they are secure and have not loosen during transportation and installation of the outdoor unit. Inspect wires for damage or cracks.

**⚠ WARNING**

*Loose, damaged, or cracked wires will cause electric shock, bodily injury and / or death.*

### *Note:*

*Loose wires can cause the wiring to burn out, damaging the outdoor unit.*

3. Confirm that electrical power supply capacity will be sufficient to run the unit. Verify that a circuit breaker and service disconnect are installed. See the Electrical table in the Product Data section for details on electrical requirements.

**⚠ WARNING**

*Per code, install a main indoor breaker, and an outdoor service disconnect that interrupts all power sources simultaneously. There is risk of fire, electric shock, explosion, physical injury or death.*

4. Confirm that the right gauge size is used for all wiring. Follow all federal, state, and local codes related to wiring.

5. Guide the power wiring to the outdoor unit, and communications / connection (power) cable from the outdoor unit to the indoor unit, through the conduit holes on the outdoor unit or control box cover (see images on the right and on the next page). Install conduits to protect the wiring and cable.

**⚠ WARNING**

**LS090-120HEV2, LS090-120HFV3, and LS090-120HXV2 indoor units and outdoor units have similar frames; however, LS090-120HEV2 and LS090-120HFV3 systems require 208-230V, 60Hz, 1ph power supply, while LS090-120HXV2 systems require 115V, 60Hz, 1ph power supply. Verify which system is being installed. An incorrect power supply will result in electric shock, fire, physical injury, or death.**

Figure 91: Circuit Breaker.

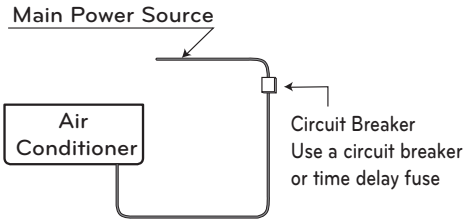


Figure 92: Accessing LSU090-120HEV2, LSU090-120HFV3, and LSU090-120HXV2 Outdoor Unit Wiring Connections (Appearances Will Differ Depending on Model).

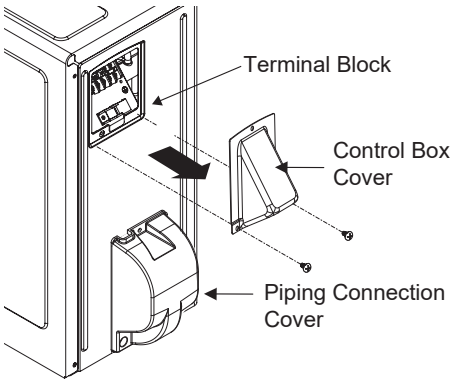


Figure 93: Accessing LSU180-240HEV2 and LSU180-240HFV3 Outdoor Unit Wiring Connections.

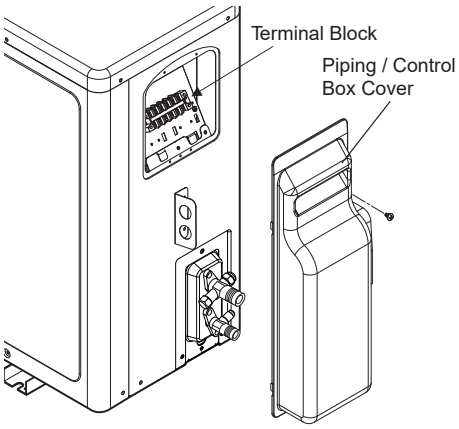






Due to our policy of continuous product innovation, some specifications may change without notification.
©LG Electronics U.S.A., Inc., Englewood Cliffs, NJ. All rights reserved. "LG" is a registered trademark of LG Corp.

# ELECTRICAL SYSTEM INSTALLATION

## Outdoor Unit Electrical Connections

**Connecting Outdoor Unit Wiring, continued.**

### *Note:*

*Do not install power wiring to the outdoor unit and the communication / connection (power) cable to the indoor unit in the same conduit. Use separate conduits. Communication problems will occur.*

Figure 94: Example of Conduit.

6. Using a JIS screwdriver, connect wires as shown at right. See also indoor unit wiring diagram found on its bottom cover, and outdoor unit wiring diagram on the inside of its chassis cover.
   - Each wire must be individually and securely attached to each terminal.

**⚠ WARNING**

*Loose, damaged, or cracked wires will cause electric shock, bodily injury and / or death.*

### *Note:*

*Loose wires can cause the wiring to burn out, damaging the outdoor unit.*

- *Secure wiring / cables with cable ties.*
- *Pay attention to the location / connection of the ground cable.*
- *Maintain a minimum of 1/4 inches of wire length from terminal block to cable bundle.*

7. When finished, reattach the piping / control box cover or control box cover (depends on model) to the outdoor unit with the screws.

Figure 95: HEV2, HFV3, and HXV2 Outdoor Unit Conduit Holes / Access Points.

LSU090-240HEV2, LSU090-240HFV3, LSU090-120HXV2

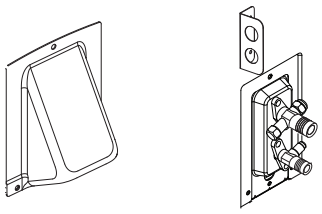

Figure 96: Outdoor Unit Electrical Connections.

LSU090-120HEV2 Outdoor Unit Terminal Block
LSU090-120HFV3 Outdoor Unit Terminal Block

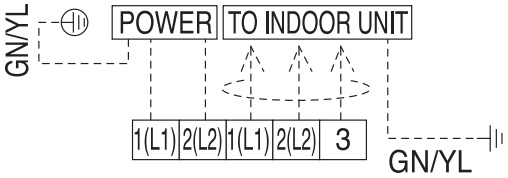


LSU180-240HEV2 Outdoor Unit Terminal Block
LSU180-240HFV3 Outdoor Unit Terminal Block

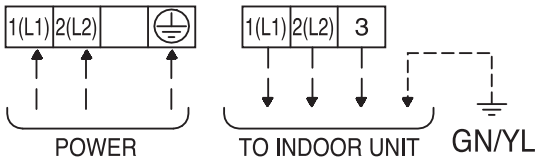


LSU090-120HXV2 Outdoor Unit Terminal Block

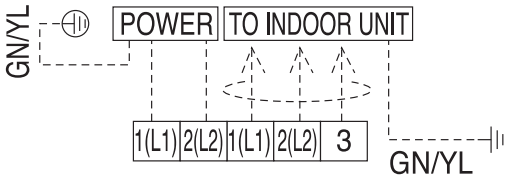


**⚠ WARNING**

**LS090-120HEV2, LS090-120HFV3 and LS090-120HXV2 indoor units and outdoor units have similar frames; however, LS090-120HEV2 and LS090-120HFV3 systems require 208-230V, 60Hz, 1ph power supply. LS090-120HXV2 systems require 115V, 60Hz, 1ph power supply. Verify which system is being installed. An incorrect power supply will result in electric shock, fire, physical injury, or death.**



Due to our policy of continuous product innovation, some specifications may change without notification.
©LG Electronics U.S.A., Inc., Englewood Cliffs, NJ. All rights reserved. "LG" is a registered trademark of LG Corp.

## Triple Leak / Pressure Test

After the refrigerant piping installation is complete, perform a triple leak / pressure test. Triple leak / pressure test is performed between the outdoor unit and indoor unit to verify that refrigerant can flow through the system without danger of leaks or pressure losses. Air and moisture that is left in the piping can lead to undesirable results and can cause damage to the system. It is important to go through a complete leak / pressure cycle to be sure that the refrigerant piping is cleared out. This process will have to be repeated if any air or moisture be is found to remain in the piping.

### *Note:*

*Insufficient or incorrectly done air purging will lead to the following:*

- *Pressure in the system can rise.*
- *Operating current can rise.*
- *Inefficient cooling or heating mode capability.*
- *Moisture in the refrigerant circuit will freeze and block capillary tubing.*
- *Water can lead to corrosion of parts in the system.*

**⚠DANGER**

*Using combustible gases, including oxygen will result in fire or explosion, resulting in personal injury or death. Use inert gas (medical-grade dry nitrogen) when checking leaks, cleaning, installing/repairing pipes, etc. The use of an 800 psig or higher nitrogen regulator is required for safety.*

### *Note:*

- *⃠ Never perform the leak test using refrigerant.*
- *⃠ To avoid nitrogen entering the refrigerant system in a liquid state, the top of the cylinder must be higher than its bottom (used in a vertical standing position) when the system is pressurized.*
- *Use only a leak-free gauge manifold set.*
- *Piping system must not be pressured to more than 550 psi. Pressures greater than 550 psi will damage the piping system and cause unit malfunction.*

Figure 97: Outdoor Unit Service Valves. (Appearances Will Vary Depending on Model.)

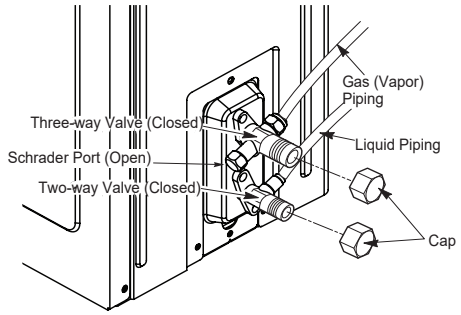


Figure 98: Triple Leak / Pressure Test Diagram.

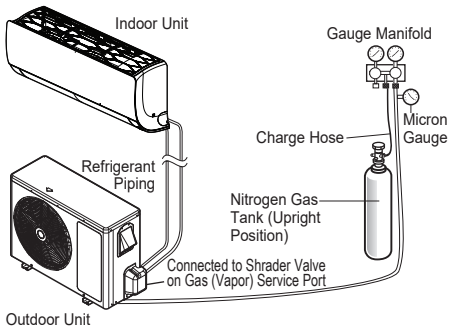


### Triple Leak / Pressure Check Procedure

1. After the refrigerant piping installation is complete, open the isolation ball valves, if any, that will have been included in the piping system.

2. Verify that both the liquid and gas (vapor) suction line outdoor unit service ports are closed, and the stem head access caps are tight. The leak / pressure check is to be performed only to the refrigerant piping system and the connected indoor unit.

3. Remove the cap on the gas (vapor) suction line Schrader port. Connect the (medical-grade dry) nitrogen cylinder regulator to a gauge manifold, then connect the gauge manifold to the gas (vapor) suction Schrader port on the service port.

4. Perform the leak / pressure check at 150 psig for fifteen (15) minutes (standing pressure check).

5. Perform the leak / pressure check at 300 psig for thirty (30) minutes (standing pressure check).

6. Perform the leak / pressure check at 550 psig for one (1) hour to make sure the piping system is leak-free. After the gauge reading reaches 550 psig, isolate the system by first closing the gauge manifold, then close the nitrogen cylinder valve. Check the flared (and any brazed connections) for leaks by applying a bubble solution to all joints.

### *Note:*

*The bubble solution must be a solution designed for refrigerant leak testing. Common soap solution must ⃠ never be used on refrigerant piping as those contain chemicals that could corrode copper and brass, and cause product malfunction.*






Due to our policy of continuous product innovation, some specifications may change without notification.
©LG Electronics U.S.A., Inc., Englewood Cliffs, NJ. All rights reserved. "LG" is a registered trademark of LG Corp.

# FINAL INSTALLATION PROCEDURES

Triple Leak / Pressure and Deep Evacuation Tests

**Triple Leak / Pressure Check Procedure, continued.**

7. If the pressure does NOT drop for one (1) hour, the system passes the test.

8. If the pressure drops, there is a leak and it must be found. Remove the bubble solution with a clean cloth, repair the leak(s), and perform the leak / pressure check again.

9. After the system has been thoroughly tested and no leaks are found, depressurize by loosening the charging hose connector at the nitrogen cylinder regulator. When system pressure returns to normal, completely disconnect the charging hose from the cylinder, and release the nitrogen charge from all refrigerant piping. Wipe off any remaining bubble solution with a clean cloth.

## Deep Evacuation Procedure

After the leak / pressure check is complete, it is required that a deep evacuation procedure is be performed to the refrigerant piping and the connected indoor unit. Deep evacuation must be performed through the gas (vapor) suction line Schrader port on the outdoor unit service port.

### *Note:*

*The deep evacuation procedure is required for Single Zone systems. A triple evacuation procedure seen on the following pages is a best practices recommendation for Single Zone systems.*

### *Note:*

*For faster evacuation, the Schrader core can be removed, and an auxiliary service port can used. Make sure to re-install the original Schrader core before operating the system.*

- Deep evacuate through just the gas (vapor) suction Schrader port on the outdoor unit service port.
- The outdoor unit service valves must remain closed and the stem head access caps tight. ⃠ Do not open the outdoor unit service valves and release the factory refrigerant charge until trim charge is complete, and the system is ready to operate.
- Any field-installed ball valves in the refrigerant system (if used) must be open to ensure all piping is free and clear for deep evacuation on all piping and the connected indoor unit.

### *Note:*

- ⃠ *Do not apply power to the system before performing the deep evacuation procedure. There is a possibility that the EEV valve will close and isolate sections of the piping system, making the deep evacuation procedure inconclusive.*
- ⃠ *Never perform evacuation using refrigerant.*
- *Use only a vacuum pump that can reach 500 microns, vacuum rated hoses or copper tubing, and a leak-free gauge manifold set.*
- *Use only new vacuum pump oil from a properly sealed (unopened) container, and change oil in pump before EVERY use.*
- *Subsequent oil changes will be necessary after several hours of continuous operation; have extra oil on hand.*
- *Use a quality micron gauge in good operating order and install as far away from pump as possible.*

**Deep Evacuation Procedure Steps**

1. If this procedure is performed shortly after the leak / pressure test, the cap and core on the gas (vapor) suction Schrader port must have already been removed, and the manifold must already be connected. If the procedure was not performed shortly after the leak / pressure test, make sure to remove the cap and core on the gas (vapor) suction Schrader port. Verify that the service valves on the outdoor unit are closed, and the stem head access caps are tight.

2. Connect the gauge manifold along with the vacuum pump to the gas (vapor) suction Schrader port (with core removed) using a vacuum hose. Open the gauge manifold and the vacuum pump valves.



Due to our policy of continuous product innovation, some specifications may change without notification.
©LG Electronics U.S.A., Inc., Englewood Cliffs, NJ. All rights reserved. "LG" is a registered trademark of LG Corp.

**Deep Evacuation Procedure, continued.**

3. Evacuate to static micron level ≤500 for at least one (1) hour.

4. Micron level must remain ≤500 for two (2) hours. If the vacuum gauge rises and stops, the system may contain moisture; therefore, it will be necessary to repeat the steps of vacuum break and drying.

5. After maintaining the system in vacuum for two (2) hours, check if the vacuum gauge rises or not. If it doesn't rise, then the system is properly evacuated.

6. Close manifold gauges.

7. Shut the valves before turning off and disconnecting the vacuum pump.

Figure 99: Evacuation Procedure Diagram.

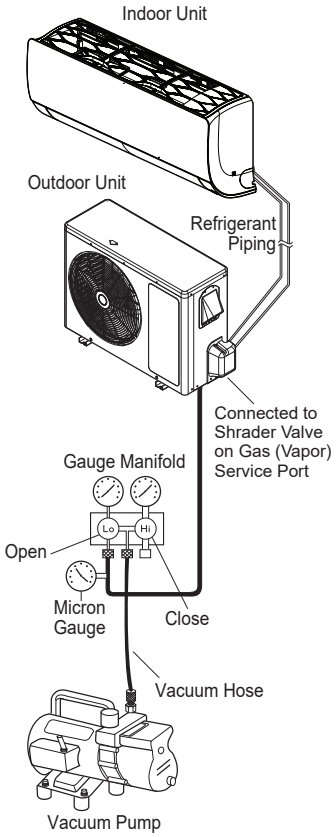


## Triple Evacuation Procedure

After the leak / pressure check is complete, it is a best practices recommendation that a triple evacuation procedure is performed to the refrigerant piping and the connected indoor unit. Triple evacuation must be performed through the gas (vapor) suction Schrader port on the outdoor unit service port.

### *Note:*

*The deep evacuation procedure is required for Single Zone systems. The triple evacuation procedure is a best practices recommendation for Single Zone systems.*

### *Note:*

*For faster evacuation, the Schrader core can be removed, and an auxiliary service port can used. Make sure to re-install the original Schrader core before operating the system.*

- Evacuate through just the gas (vapor) suction Schrader port on the outdoor unit service port.
- The outdoor unit service valves must remain closed and the stem head access caps tight. ⃠ Do not open the outdoor unit service valves and release the factory refrigerant charge until trim charge is complete, and the system is ready to operate.
- Any field-installed ball valves in the refrigerant system (if used) must be open to ensure all piping is free and clear for evacuation on all piping and connected indoor unit.

### *Note:*

- ⃠ *Never perform evacuation using refrigerant.*
- *Use only a vacuum pump that can reach 500 microns, vacuum rated hoses or copper tubing, and a leak-free gauge manifold set.*
- *Use only new vacuum pump oil from a properly sealed (unopened) container, and change oil in pump before EVERY use.*
- *Subsequent oil changes will be necessary after several hours of continuous operation; have extra oil on hand.*
- *Use a quality micron gauge in good operating order and install as far away from pump as possible.*



Due to our policy of continuous product innovation, some specifications may change without notification.
©LG Electronics U.S.A., Inc., Englewood Cliffs, NJ. All rights reserved. "LG" is a registered trademark of LG Corp.

# FINAL INSTALLATION PROCEDURES

## Triple Evacuation Test

### Triple Evacuation Procedure Steps

1. If this procedure is performed shortly after the leak / pressure test, the cap and core on the gas (vapor) suction Schrader port must have already been removed, and the manifold must already be connected. If the procedure was not performed shortly after the leak / pressure test, make sure to remove the cap and core on the gas (vapor) suction Schrader port. Verify that the service valves on the outdoor unit are closed, and the stem head access caps are tight.

2. Connect the gauge manifold along with the vacuum pump to the gas (vapor) suction Schrader port (with core removed) using a vacuum hose. Open the gauge manifold and the vacuum pump valves.

***Note:***

*After the vacuum pump is first operated, if hoses, manifold, and vacuum valves are leak free (and oil is not moisture laden), the gauge must read <100 microns within one (1) minute.*

⃠ *Do not proceed if the gauge does not read <100 microns within one (1) minute. There is a leak in the hose, gauge manifold, or vacuum valve, and the equipment must be replaced.*

3. Operate the vacuum pump and evacuate the system to the 2,000 micron level. Isolate the pump by closing the manifold gauges and the vacuum pump valve, and then watch the micron level. Micron level will rise a bit, but MUST eventually stop rising for fifteen (15) minutes.

- If the micron level DOES NOT stop rising, there is a leak, and the leak test must be performed again.
- If the micron level DOES rise above 2,000 micron, re-open the manifold gauges and the vacuum pump valve and continue evacuation back down to 2,000 micron level.
- If the micron level holds at 2,000 micron, continue to step 4.

4. Break vacuum with 50 psig nitrogen purge for an appropriate amount of time (this is to “sweep” moisture from piping).

5. Purge nitrogen from the system until the pressure drops down to 1 to 3 psig.

6. Evacuate to 1,000 micron level. Isolate the pump by closing the manifold gauges and the vacuum pump valve, and then watch the micron level. Micron level will rise a bit, but MUST eventually stop rising for fifteen (15) minutes.

- If the micron level DOES NOT stop rising, there is a leak, and the leak test must be performed again.
- If the micron level DOES rise above 1,000 micron, re-open the manifold gauges and the vacuum pump valve, and continue evacuation back down to 1,000 micron level.
- If the micron level holds at 1,000 micron, continue to step 7.

7. Break vacuum with 50 psig nitrogen purge for an appropriate amount of time.

8. Purge nitrogen from the system until the pressure drops down to 1 to 3 psig.

9. Evacuate to static micron level ≤500 for at least one (1) hour.

10. Micron level must remain ≤500 for two (2) hours. If the vacuum gauge rises and stops, the system may contain moisture; therefore, it will be necessary to repeat the steps of vacuum break and drying.

11. After maintaining the system in vacuum for two (2) hours, check if the vacuum gauge rises or not. If it doesn’t rise, then the system is properly evacuated.

12. Close manifold gauges.

13. Shut the valves before turning off and disconnecting the vacuum pump.



Due to our policy of continuous product innovation, some specifications may change without notification.
©LG Electronics U.S.A., Inc., Englewood Cliffs, NJ. All rights reserved. “LG” is a registered trademark of LG Corp.

## Refrigerant Trim Charge

The single zone system will need an additional refrigerant charge if the installed piping lengths are greater than the "piping length (no additional refrigerant, ft.) specification" listed in the product tables. See the product sections in the engineering and installation manuals. The additional refrigerant charge can be calculated manually using the information in the engineering and / or installation manuals, or by LATS.

1. Keep the outdoor unit service values closed while adding the trim charge to the system. See the specification tables in the front of this installation manual for base charge, and see below for the correct additional refrigerant trim charge amounts for each system.

2. Charge through just the gas (vapor) suction Schrader port.

**⚠ WARNING**

- *Follow all guidelines when handling refrigerant.*
- ⃠ *Never inhale or handle refrigerant directly. Doing so will cause bodily injury.*

Table 22: Single Zone Mega, Standard Efficiency, and Mega 115V Refrigerant Piping System Additional Refrigerant Charge.

| Model Numbers | | Refrigerant Piping Length (ft.) | | | | | | | | | | | |
|---|---|---|---|---|---|---|---|---|---|---|---|---|---|
| | | 16.4 | 24.6 | 32.8 | 41.0 | 49.2 | 65.6 | 82.0 | 98.4 | 114.8 | 131.2 | 147.6 | 164.0 |
| ***Mega, Standard Efficiency Models*** | | | | | | | | | | | | | |
| LS090HEV2 (LSN090HEV2 / LSU090HEV2) LS090HFV3 (LSN090HFV3 / LSU090HFV3) | Additional Refrigerant Charge (oz.) | 0 | 0 | 1.8 | 3.6 | 5.4 | - | - | - | - | - | - | - |
| LS120HEV2 (LSN120HEV2 / LSU120HEV2) LS120HFV3 (LSN120HFV3 / LSU120HFV3) | | 0 | 0 | 1.8 | 3.6 | 5.4 | - | - | - | - | - | - | - |
| LS180HEV2 (LSN180HEV2 / LSU180HEV2) LS180HFV3 (LSN180HFV3 / LSU180HFV3) | | 0 | 0 | 2.1 | 4.3 | 6.4 | 10.7 | - | - | - | - | - | - |
| LS240HEV2 (LSN240HEV2 / LSU240HEV2) LS240HFV3 (LSN240HFV3 / LSU240HFV3) | | 0 | 0 | 2.1 | 4.3 | 6.4 | 10.7 | - | - | - | - | - | - |
| ***Mega 115V Models*** | | | | | | | | | | | | | |
| LS090HXV2 (LSN090HXV2 / LSU090HXV2) | Additional Refrigerant Charge (oz.) | 0 | 0 | 1.8 | 3.6 | 5.4 | - | - | - | - | - | - | - |
| LS120HXV2 (LSN120HXV2 / LSU120HXV2) | | 0 | 0 | 1.8 | 3.6 | 5.4 | - | - | - | - | - | - | - |

## *Note:*

- *Capacity is based on standard length.*
- *Equivalent Pipe Length = Actual Pipe Length + Number of Bends x 0.3.*
- *Additional Refrigerant Charge Calculation : X (g) = [ (Refrigerant Pipe Length) - (No Charge Pipe Length) ] × (Additional Refrigerant).*
- *There is no need to add refrigerant if equivalent pipe is less than the "piping length with no additional refrigerant" in the table above.*





Due to our policy of continuous product innovation, some specifications may change without notification.
©LG Electronics U.S.A., Inc., Englewood Cliffs, NJ. All rights reserved. "LG" is a registered trademark of LG Corp.

## Finishing the Job

After the Triple Leak and Evacuation (and refrigerant trim charge, if any) procedures have been performed, follow the steps below to open the refrigerant lines.

1. Verify that the auxiliary service port is removed (if used in the Evacuation procedure) and the original Schrader core was re-installed on the gas (vapor) suction service port.

2. The service ports are a back-seated type with a right hand thread. Remove the service valve caps on both the gas (vapor) suction and the liquid service ports.

3. Using an appropriately sized Allen wrench, fully open the valves on both the gas (vapor) suction and the liquid service ports by turning the valve stem counterclockwise.

4. Turn until the valve stem is out, stops, and the valve is completely backseated. ⃠ Do not apply excessive force.

5. Securely replace service port caps on both the gas (vapor) suction and the liquid using an adjustable wrench.



Due to our policy of continuous product innovation, some specifications may change without notification.
©LG Electronics U.S.A., Inc., Englewood Cliffs, NJ. All rights reserved. “LG” is a registered trademark of LG Corp.

## Reattaching the Indoor Unit Bottom Cover (HEV2, HFV3, and HXV2)

Reattach the indoor unit bottom cover after all other installation procedures are complete.

1. If ON, shut power OFF to the system.

2. At the bottom of the bottom cover, insert the three (3) to four (4) hinges into the channels molded to the left, right, and middle of the indoor unit (Location 1). Number of hinges present depends on model of indoor unit.

3. After all hinges are secure, match the three (3) or four (4) small C-hooks located in the middle of the bottom cover (Location 2) to their sockets on the indoor unit. (Number of C-hooks present depends on model of indoor unit.) On the outside of the bottom cover, securely snap the C-hooks in place at each location using the heel of the palm.

4. Match the snaps at the top left and right sides of the bottom cover to their sockets, and push to lock the bottom cover to the indoor unit (Location 3).

5. Verify the bottom cover is securely installed by pushing the bottom cover to the indoor unit at all attachment locations.

### *Note:*

*To prevent bending the bottom cover (and subsequent damage), assemble the bottom cover correctly.*

Figure 100: Close Up of Bottom Cover Connections (Appearances Will Vary Depending on Indoor Unit Model).

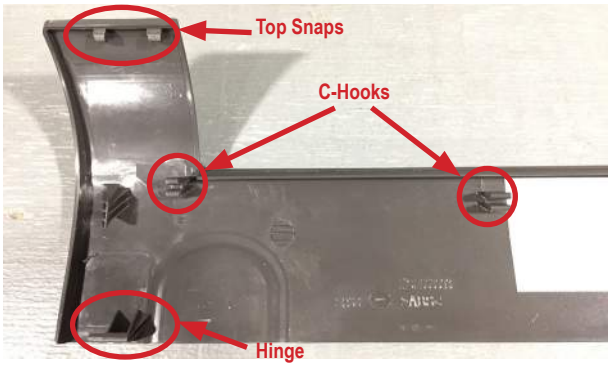


Figure 101: Inserting the Bottom Cover Hinges into the Indoor Unit Channels (Step 2).

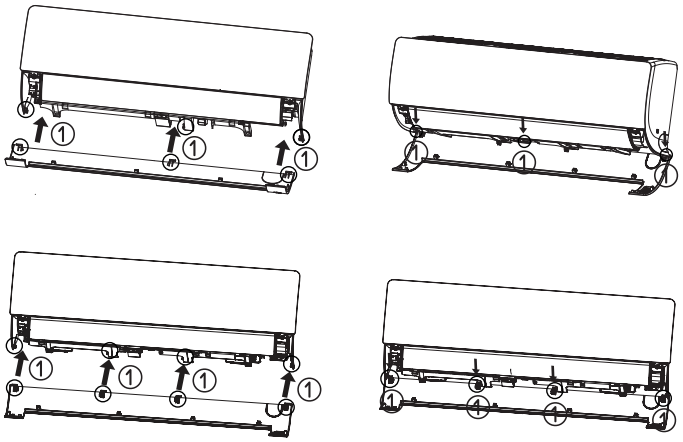

Figure 102: Securing the Bottom Cover C-hooks to the Indoor Unit Sockets (Step 3).

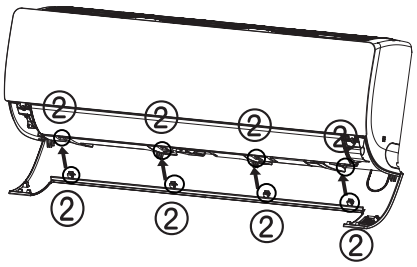

Figure 103: Snapping the Top Left and Right Sides (Step 4).

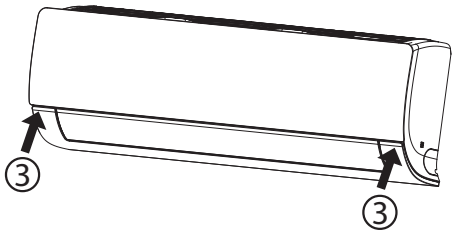

Figure 104: Checking that All Attachment Locations Are Secure (Step 5).

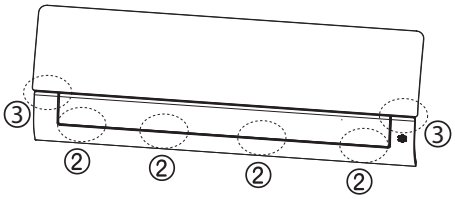





Due to our policy of continuous product innovation, some specifications may change without notification.
©LG Electronics U.S.A., Inc., Englewood Cliffs, NJ. All rights reserved. "LG" is a registered trademark of LG Corp.

# FINAL INSTALLATION PROCEDURES

Air Filter Disassembly and Assembly

## Air Filter Disassembly and Assembly (HEV2, HFV3, and HXV2)

### Air Filter Disassembly

1. Turn power off to the system.
2. Find the handles located at the top-front of the air filter molded into the plastic frame support.
3. Lift handles slightly up and out to remove the air filter.

Figure 105: Disassembling the Air Filter (Appearances Will Vary Depending on Indoor Unit Model).

2. Lifting the Air Filter by the Handles.

3. Disassembling the Air Filter.

### Air Filter Assembly

1. Turn power OFF to the system.
2. Holding the air filter by its handles, match the hooks and grooves on the air filter to the hooks and grooves at the top-back of the indoor unit. (Number of hooks and grooves present depends on model of indoor unit.)
3. Match the air filter bars and grooves to the grooves and hooks at the top-front of the indoor unit.
4. Use thumbs to gently snap the air filter to the indoor unit where the top-front bars, grooves, and hooks are located.
5. Check the sides of the front grille to verify the air filter is assembled correctly.
6. Turn power back on to the system.

Figure 106: Assembling the Air Filter (Appearances Will Vary Depending on Indoor Unit Model).

2. Matching Hooks to Top-Back Grooves.

Three (3) Top-Back Hooks to Grooves.

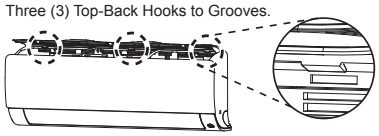

Four (4) Top-Back Hooks to Grooves.

3. Location of Two (2) Top-Front Bars.

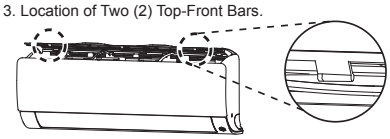

Example of Indoor Unit Hook to Air Filter Groove.

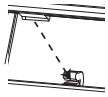

4. Securing the Air Filter on the Indoor Unit.

5. Checking the Sides for Correct Air Filter Assembly.

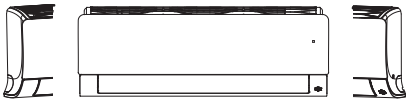

## Note:

- *It is easier to assemble and disassemble the air filter if standing on a ladder looking down at the top of the indoor unit.*
- *Do not bend the air filter; this damages it.*
- *If the air filter is not assembled correctly, dust and other substances will enter the indoor unit.*



Due to our policy of continuous product innovation, some specifications may change without notification.
©LG Electronics U.S.A., Inc., Englewood Cliffs, NJ. All rights reserved. "LG" is a registered trademark of LG Corp.

## Installing Batteries into the Handheld Remote Controller

For information on using the handheld remote controller, refer to its owner's manual.

1. The remote controller needs two AAA (1.5V) batteries for operation. Remove the battery cover from the back of the remote controller by pushing the tab down in the direction seen at right.

2. Insert the two new batteries.
   - Align batteries by the (+) and (-) sides.
   - The interior battery compartment of the remote controller will have clear markings for the (+) and (-) placement.

3. Verify that the batteries have clicked into the compartment and are firmly engaged with the contacts on either side of them.

4. Reattach the back cover of the remote controller.

5. Proceed with powering on the remote controller and use as needed. Remove the batteries if system won't be used for an extended time.

Figure 107: Installing the Remote Controller Batteries.

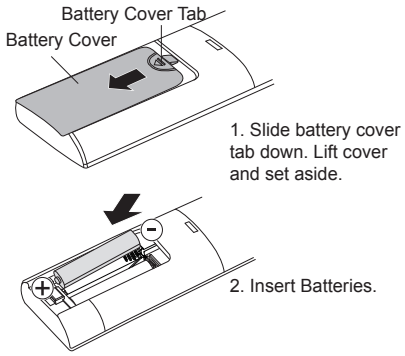


## Test Run

After all installation procedures are complete, the system is ready for a test run. Follow the guidelines below.

1. Check that all drain piping, refrigerant piping, and wiring / cables are properly connected.

2. Check that both the gas (vapor) suction and liquid refrigerant piping service valves are fully open.

3. Install the batteries into the handheld remote controller (see above).

4. Turn on the power to the outdoor unit, and press and hold the On / Off button for three (3) to five (5) seconds; this switches the system to test operation mode.

5. The system will operate in cooling with maximum air flow for 18 minutes before returning to the factory default setting. While system operates in the test operation mode, note any issues that occur, and fix as necessary.

Figure 108: Test Operation Mode.

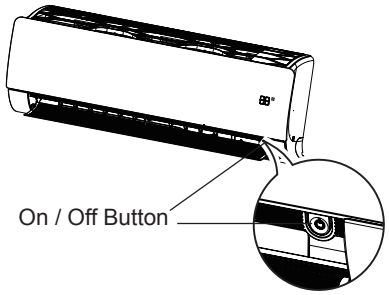


## Performance Evaluation

Operate the unit in heating and / or cooling, depending on outdoor conditions, for 15 to 20 minutes, then check the system refrigerant charge (feature availability depends on model):

1. Measure the pressure of the gas (vapor) suction service valve. See optimum psig in table at right.

2. Measure the air temperature from both the inlets and outlets.

3. Verify the difference between the inlet and outlet temperatures is >14.4°F.

4. The air conditioner is now ready to use.

Figure 109: Performance Evaluation Measurement Locations.

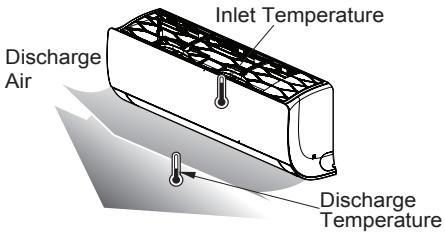


Table 23: Gas Side Pressure at Optimum Condition When System is in Cooling.

| Outside Ambient Temperature | Gas (Vapor) Service Valve Pressure |
|---|---|
| 95°F | 120~135 psig |

### *Note:*

- *If all modes can't be tested all at one time, testing must be performed later when weather conditions permit.*
- *If the actual pressure is higher than shown, the system is most likely overcharged, and charge must be removed. If the actual pressure is lower than shown, the system is most likely undercharged, and charge must be added.*





Due to our policy of continuous product innovation, some specifications may change without notification.
©LG Electronics U.S.A., Inc., Englewood Cliffs, NJ. All rights reserved. "LG" is a registered trademark of LG Corp.

# FINAL INSTALLATION PROCEDURES

Installer Mode, Cooling Only Mode

## Installer Mode

It will be necessary to switch to Installer mode if the system needs to operate in Heating Only or Cooling Only modes, or the Pump Down procedure needs to be performed.

**To Enter Installer Mode:**

1. Press the Reset and "A" buttons. A very slender tool is needed to access the Reset button.

2. Set the code by pressing the Up and Down Temperature buttons, and then press the ON / OFF button. The Up Temperature button changes the code on the ten (10) digit; the Down Temperature button changes the code on the one (1) digit.

Figure 110: Using the Handheld Controller to Change System to Installer Mode.

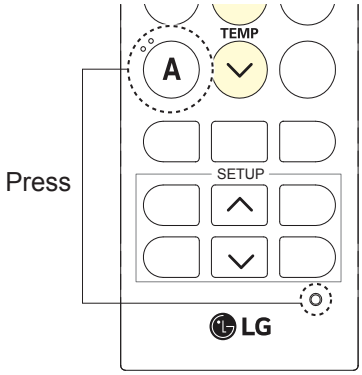


## Enabling Cooling Only Mode

Before running the Pump Down procedure, the unit must be switched to Cooling Only mode. To be able to run Cooling Only mode, the unit must be changed to Installer mode (see previous page for instructions).

1. Supply power to the system, but system must be OFF with all functions inactive.
2. Enter the Installer mode.
3. Set code to 45 for Mega (HEV2), Standard Efficiency (HFV3), and Mega 115V (HXV2).
4. Press ON / OFF button and select the code number 45. Unit will beep to acknowledge that code has been received.
5. Turn off power for a minimum of 30 seconds.
6. Turn power back on to system.

## Disabling Cooling Only Mode

After Pump Down procedure has been performed, Cooling Only mode will need to be disabled, and the system will need to be returned to normal operating mode.

1. Supply power to the system, but system must be OFF with all functions inactive.
2. Enter the Installer mode.
3. Set code to 43 for HEV2, HFV3 systems, or 46 for HXV2 systems.
4. Press ON / OFF button and select the code number 43 for HEV2, HFV3 systems, or 46 for HXV2 systems. Unit will beep to acknowledge that code has been received.
5. Turn off power for a minimum of 30 seconds.
6. Turn power back on to system.

## *Note:*

- *After the system is in Installer mode (with Cooling Only mode initiated), automatic operation is suspended.*
- *After Cooling Only mode is disabled, the system will return to normal operation.*
- *Installer mode cannot be entered if the unit is running. The system must be completely OFF.*
- *All Installer code numbers must be entered when system is OFF.*
- *WLAN Module's communication time will lag by about one (1) minute after unit is turned back on, and in normal operating mode.*
- *Entire lock or Mode lock cannot be set if heating or automatic operation is set through a central controller.*



Due to our policy of continuous product innovation, some specifications may change without notification.
©LG Electronics U.S.A., Inc., Englewood Cliffs, NJ. All rights reserved. "LG" is a registered trademark of LG Corp.

## Pump Down Procedure

This procedure is performed when the refrigerant piping system is serviced. Pumping down collects all the refrigerant in the outdoor unit without losing any charge. Always adhere to and be familiar with local codes regarding the handling of refrigerant.

The system must operate in Cooling Only mode to proceed with the pump down procedure. If needed, refer to the previous sections for proper steps to place the unit into Cooling Only mode.

1. Turn off the unit's power switch. Connect a low-pressure gauge manifold hose to the charge port on the gas (vapor) suction service valve.
2. Open the gas (vapor) suction service valve halfway, and purge the air in the manifold hose using the refrigerant.
3. Fully close the liquid piping service valve.
4. Turn on the unit's power switch and start the Cooling Only mode operation.
5. Observe the pressure gauge reading. When it changes 14.2 to 7.1 psig, fully close the gas line valve and then immediately turn the unit off. Pump down procedure is complete and all refrigerant will be collected into the outdoor unit.

**⚠ WARNING**

- ⃠ *Never inhale or handle refrigerant directly. Doing so will cause bodily harm and injury.*
- *After pump down, power must be turned off before the hose is removed. If the system is operated without the hose connected, air inside the compressor will cause the pressure to increase, and possibly cause an explosion and physical injury.*

***Note:***
*Perform Pump Down procedure in the Cooling Only mode.*




Due to our policy of continuous product innovation, some specifications may change without notification.
©LG Electronics U.S.A., Inc., Englewood Cliffs, NJ. All rights reserved. "LG" is a registered trademark of LG Corp.

# TROUBLESHOOTING

## LG SIMS - Self Diagnosis Functions

The SIMs WLAN module and the smart phone app together provide monitoring and troubleshooting capability for LG Duct Free Systems. SIMs function only with LG Duct Free products. LG SIMs can also be used with Single Zone one-to-one configurations such as the Single Zone Wall Mount systems. SIMs app is available for Apple® iPhone® iOS or Android™ smart phone operating systems. Download the latest version from the App Store (iPhone iOS) or Google Play™ store (Android). (Apple and iPhone are trademarks of Apple Inc., registered in the U.S. and other countries. Android and Google Play store are trademarks of Google LLC.)

SIMs can display and graph operational data for the air conditioner system including the indoor unit and the outdoor unit. SIMs also displays error codes and a troubleshooting guide. A full copy of the LG SIMs Smart Inverter Monitoring System User's Manual is available on the www.lghvac.com website.

To use SIMs, you must be a trained HVAC service technician familiar with variable refrigerant flow (VRF) systems in general, and with LG's Duct Free System products. You must understand the inverter air conditioning operation cycle, the meaning of the data displayed by SIMs, and how to use the data to troubleshoot the system.

Figure 111: LG SIMs App and WLAN Module.

Figure 112: SIMs WLAN Module to DFS System Example.

## ⚠ WARNING

*High voltages capable of causing death are used in this equipment. Outdoor unit power remains connected during this procedure. Take extreme caution not to touch electrical components or connections. Failure to observe this warning can result in death or severe injury.*

## *Note:*

- *The Duct Free System air conditioning system must run for at least 15–20 minutes before data collected by SIMs is valid for troubleshooting.*
- *The free SIMs app must be correctly installed on the smart phone before using SIMs.*
- *Some outdoor units have an LGMV extension cable accessed by removing the side handle cover. If the outdoor unit does not have this extension cable, access the LGMV connector by removing the top cover of the outdoor unit.*

### SIMs App Main Info Screen

The main screen is the first screen displayed after wireless connection is established. Tap the Main Info tab to display current readings regarding the indoor and outdoor unit(s). The Operational Info area of the screen will show active functions or modes by illuminating the light to the right of the function.

Additional Help information can be accessed by tapping the Help Menu buttons at the bottom of this screen.

Figure 113: SIMs App Main Info Screen

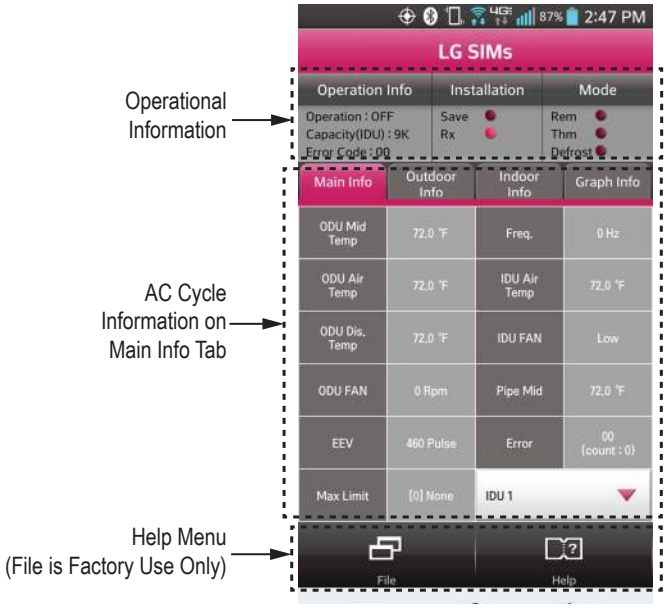




Due to our policy of continuous product innovation, some specifications may change without notification.
©LG Electronics U.S.A., Inc., Englewood Cliffs, NJ. All rights reserved. "LG" is a registered trademark of LG Corp.

## SIMs App Screens

### Outdoor Info/ Component Screen

Displays the following information:

- Frequency
- FAN1 RPM
- FAN2 RPM
- DC Link
- Current
- Voltage
- EEV Mode
- Restart Timer
- Comp Mode
- EEV

### Outdoor Info/ Temperature Screen

Displays the following information:

- Inv TD
- Suction
- Discharge
- Cond Mid
- Cond Out
- Heatsink
- Air Temp

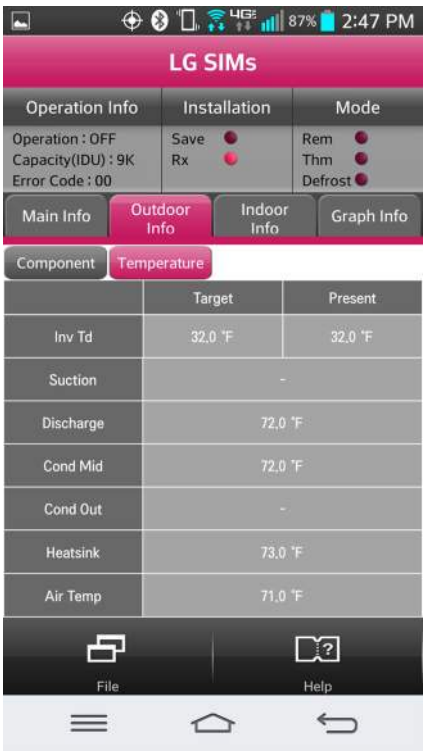


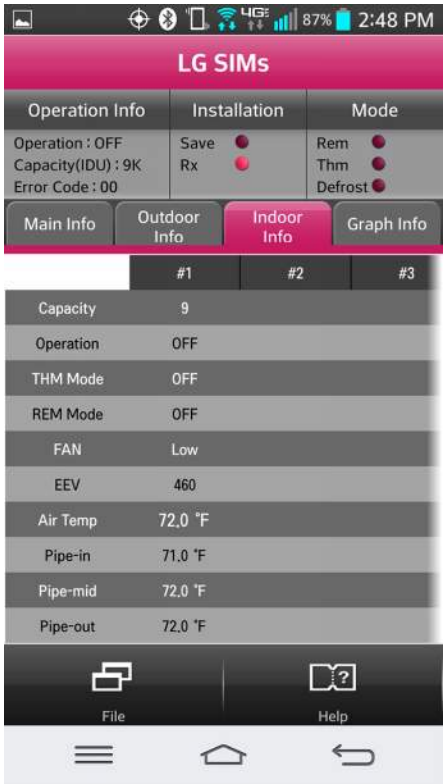


### Indoor Info Tab

Displays the following information:

- Frequency
- Operation
- THM Mode
- REM Mode
- FAN
- EEV
- Air Temp
- Pipe-in
- Pipe-mid
- Pipe-out

### Graph Info Tab

This tab has three sub sections:

- IDU - Indoor Unit Temperature graph. Displays IDU information in graph format. Information displayed is for the IDU # selected on the Main screen.
- ODU - Outdoor Unit Temperature and Frequency graph. Displays ODU information in graph format.
- ODU Electric - Outdoor Unit Electric data graph is displayed.

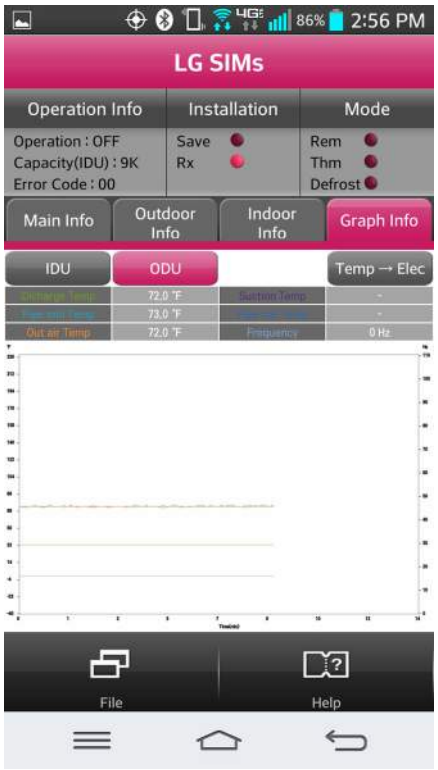






Due to our policy of continuous product innovation, some specifications may change without notification.
©LG Electronics U.S.A., Inc., Englewood Cliffs, NJ. All rights reserved. "LG" is a registered trademark of LG Corp.

# TROUBLESHOOTING

Error Codes

## Troubleshooting Using Error Codes

Refer to the table below and on the next page for error codes that are generated from the indoor and outdoor units. These codes are the most common. Your particular system might generate additional codes not listed here. Please contact LG Support if you see these types of errors and a simple power cycle has not corrected the issue.

### Error Codes

- Indicate different types of unit failures, assists in self-diagnosis and to track the frequency of occurrence.
- Error codes are shown on the control board LEDs of indoor and outdoor units and the SIMs app. Also, check the wired remote controller display first for error codes if present.
- If two or more errors occur simultaneously, the lower error code number is displayed first.
- After error is resolved, the error code does not display.

### Decoding the Error Display

The first and second number on the LED indicates error number. Example: 21 = LED1 2x blink, LED2 1x blink.

### Error Code Nomenclature Definitions

- MICOM: Non-volatile memory chip where unit setup information is stored.
- EEPROM: Non-volatile memory chip where device identification, size, and factory defined default component operating parameters are stored.

## Mega, Standard Efficiency, and Mega 115V Single Zone Wall Mounted Indoor Unit Error Codes

Table 24: Single Zone HEV2, HFV3, and HXV2 Wall Mounted Indoor Unit Error Codes.

| Error Code | Description | No. of Times Indoor Unit LEDs Blink | |
|---|---|---|---|
| | | LED1 (Single Digit) | LED2 (Ten Digit) |
| 1 | Indoor unit room temperature sensor error | 1X | - |
| 2 | Indoor unit inlet pipe sensor error | 2X | - |
| 3 | Wired remote control error | 3X | |
| 4 | Float switch error (optional) | 4X | - |
| 5 | Communication error between indoor unit and outdoor unit | 5X | - |
| 6 | Indoor unit outlet pipe sensor error | 6X | - |
| 9 | Indoor unit EEPROM error | 9X | - |
| 10 | Indoor unit BLDC motor fan lock | -- | 1X |
| 12 | Indoor unit middle pipe sensor error | 2X | 1X |
| 21 | DC Peak (IPM Fault); Compressor DC voltage was too high | 2X | 1X |
| 22 | Current Transformer2 (CT2) error; Alternating current (AC) input too high | 2X | 2X |
| 23 | DC Link Low Volt | 2X | 3X |
| 25 | AC Low/High Volt | 2X | 5X |
| 26 | DC Comp Position Error (not providing rotation), Locking | 2X | 6X |
| 27 | PSC Fault; Current to inverter compressor between AC and DC converter circuit too high | 2X | 7X |
| 28 | Inverter compressor DC voltage is too high | 2X | 8X |
| 29 | Inverter compressor amperage is too high | 2X | 9X |
| 31 | Current-to-current transformer (CT) thermistor is too low | 3X | 1X |
| 32 | Inverter Compressor Discharge Pipe (D-Pipe) Overheat | 3X | 2X |
| 40 | CT Sensor Error; Thermistor is disconnected or shorted out | 4X | - |
| 41 | D-Pipe Sensor INV is disconnected or shorted out | 4X | 1X |
| 44 | Outdoor Air Sensor is disconnected or shorted out | 4X | 4X |
| 45 | Middle thermistor of outdoor unit condenser coil is disconnected or shorted out | 4X | 5X |
| 46 | Outdoor unit suction line thermistor is disconnected or shorted out | 4X | 6X |
| 48 | Outdoor unit coil outlet (liquid line) thermistor is disconnected or shorted out | 4X | 8X |
| 53 | Communication failure from outdoor unit to indoor unit | 5X | 3X |
| 60 | Outdoor unit printed circuit board (PCB) EEPROM check sum error | 6X | - |
| 61 | Outdoor unit condenser coil temperature is too high | 6X | 1X |
| 62 | Outdoor unit inverter compressor PCB heat sink temperature is too high | 6X | 2X |
| 63 | Condenser coil pipe thermistor temperature is too low | 6X | 3X |
| 65 | Heat sink thermistor has disconnected or has shorted out | 6X | 5X |
| 67 | Outdoor brushless direct current (BLDC) fan motor lock error | 6X | 7X |



Due to our policy of continuous product innovation, some specifications may change without notification.
©LG Electronics U.S.A., Inc., Englewood Cliffs, NJ. All rights reserved. "LG" is a registered trademark of LG Corp.

## Mega, Standard Efficiency, and Mega 115V Single Zone Wall Mounted Outdoor Unit Error Codes

The Single Zone Wall Mounted outdoor unit error codes are visible on the outdoor unit, as well as from the indoor unit. However, the indoor unit error codes are only visible from the indoor unit and will not display at the outdoor unit. When troubleshooting the system, be sure to verify if the error codes that are being displayed are specific for indoor or outdoor units.

Table 25: Single Zone HEV2, HFV3, and HXV2 Wall Mounted Error Codes.

| Error Code | Description | No. of Times Outdoor Unit LEDs Blink | |
|---|---|---|---|
| | | LED1 | LED2 |
| 21 | DC Peak (IPM Fault); Compressor DC voltage was too high | 2X | 1X |
| 22 | Current Transformer2 (CT2) error; Alternating current (AC) input too high | 2X | 2X |
| 23 | DC Link Low Volt | 2X | 3X |
| 25 | AC Low/High Volt | 2X | 5X |
| 26 | DC Comp Position Error (not providing rotation), Locking | 2X | 6X |
| 27 | PSC Fault; Current to inverter compressor between AC and DC converter circuit too high | 2X | 7X |
| 28 | Inverter compressor DC voltage is too high | 2X | 8X |
| 29 | Inverter compressor amperage is too high | 2X | 9X |
| 31 | Current-to-current transformer (CT) thermistor is too low | 3X | 1X |
| 32 | Inverter Compressor Discharge Pipe (D-Pipe) Overheat | 3X | 2X |
| 40 | CT Sensor Error; Thermistor is disconnected or is shorted out | 4X | - |
| 41 | D-Pipe Sensor INV is disconnected or shorted out | 4X | 1X |
| 44 | Outdoor Air Sensor is disconnected or shorted out | 4X | 4X |
| 45 | Middle thermistor of outdoor unit condenser coil is disconnected or shorted out | 4X | 5X |
| 46 | Outdoor unit suction line thermistor is disconnected or shorted out | 4X | 6X |
| 48 | Outdoor unit coil outlet (liquid line) thermistor is disconnected or shorted out | 4X | 8X |
| 53 | Communication failure from outdoor unit to indoor unit | 5X | 3X |
| 60 | Outdoor unit printed circuit board (PCB) EEPROM check sum error | 6X | - |
| 61 | Outdoor unit condenser coil temperature is too high | 6X | 1X |
| 62 | Outdoor unit inverter compressor PCB heat sink temperature is too high | 6X | 2X |
| 63 | Condenser coil pipe thermistor temperature is too low | 6X | 3X |
| 65 | Heat sink thermistor has disconnected or has shorted out | 6X | 5X |
| 67 | Outdoor brushless direct current (BLDC) fan motor lock error | 6X | 7X |

**Refer to Service Manuals posted on www.lghvac.com for a full description of all error codes and work-arounds.**



Due to our policy of continuous product innovation, some specifications may change without notification.
©LG Electronics U.S.A., Inc., Englewood Cliffs, NJ. All rights reserved. "LG" is a registered trademark of LG Corp.

# CAUTIONS FOR REFRIGERANT LEAKS



## Cautions for Refrigerant Leaks / Introduction

ASHRAE Standards 15-2010 and 34-2010 offer guidelines that address refrigerant safety and the maximum allowable concentration of refrigerant in an occupied space. Refrigerant will dissipate into the atmosphere, but a certain volume of air is required for this to occur safely. For R410A refrigerant, the maximum allowable concentration is 0.026 lbs./ft$^3$ per 1,000 ft$^3$ of air in an occupied space. Buildings with twenty-four (24) hour occupancy allow half of that concentration.[1]

ASHRAE Standards 15 and 34 assume that if a system develops a leak, its entire refrigerant charge will dump into the area where the leak occurs. To meet ASHRAE Standards 15 and 34, calculate the refrigerant concentration that may occur in the smallest room volume on the system, and compare the results to the maximum allowable concentration number (see below for information on how to calculate the refrigerant concentration).[1] Also consult state and local codes in regards to refrigerant safety.

**⚠ WARNING**

*Verify the maximum refrigerant concentration level in the space where the indoor unit will be mounted meets the concentration limit for the application. If the refrigerant leaks and safety limits are exceeded, it could result in personal injuries or death from oxygen depletion.*

## *Note:*

*Take appropriate actions at the end of HVAC equipment life to recover, recycle, reclaim or destroy R410A refrigerant according to applicable US EPA rules.*

To calculate the potential refrigerant concentration level (RCL):

1. Measure the occupied space dimensions (in feet).
2. Calculate the cubic foot volume of air in the smallest occupied space. (To obtain a detailed overview of the RCL, perform the same calculations to the second smallest zone, the third smallest zone until the RCL is obtained for all zones. Also, pay special attention to areas such as basements, etc., where refrigerant cannot dissipate easily.)
3. Divide the refrigerant charge of the Single Zone system serving the area in pounds by the results of step 1.
4. If the calculation indicates that the potential refrigerant concentration level is higher than the allowed RCL, increase the cubic volume of the smallest occupied space or modify the piping system design.
5. The allowable RCL limit for most applications must be equal to or less than 0.026 lbs./ft$^3$. However, in special occupied spaces, such as hospitals and nursing homes, where occupants may have limited mobility, the allowable RCL limit is cut in half. See ASHRAE Standard 34-2007 and local codes for detailed information.[1]

### Refrigerant Concentration Limit (RCL) Calculations

To calculate total refrigerant amount per system:

**Amount of Factory-Charged Refrigerant per Outdoor Unit** + **Amount of Additional Refrigerant Trim Charge** = **Total System Refrigerant Charge**

$$\text{RCL (lbs./ft}^3\text{)} = \frac{\text{Total System Refrigerant Charge (lbs.)}}{\text{Volume of Smallest Occupied Space (ft}^3\text{)}}$$

*[1] American Society of Heating, Refrigeration and Air Conditioning Engineers, Inc. (ASHRAE). Atlanta, GA. ASHRAE, Inc. Information about ASHRAE Standard 15-2010 / 34-2010 and addenda current as of the date of this publication.*



Due to our policy of continuous product innovation, some specifications may change without notification.
©LG Electronics U.S.A., Inc., Englewood Cliffs, NJ. All rights reserved. "LG" is a registered trademark of LG Corp.

# INSTALLATION CHECKLIST

## Major Component Rough-In

| Description | Check |
|---|---|
| Single Zone outdoor unit was connected properly per local code and the product installation procedures. | |
| All literature and bagged accessories have been removed from the fan discharge. | |
| Indoor unit was installed, properly supported, and located indoors in a non-corrosive environment. | |
| Single Zone unit's gravity condensate drain line was connected and routed where it properly drains away or, if installed in a mechanical room, was connected and properly routed to a drain terminal. | |

## Piping and Insulation

| Description | Check |
|---|---|
| Single-zone and multi-zone duct-free split systems: ACR copper piping rated at the system working pressure for R410A was used. | |
| All refrigerant pipes and valves were insulated separately. Insulation is positioned up against the walls of the indoor unit. No gaps shown. Insulation was not compressed at clamps and hangers. | |

## Brazing Practices

| Description | Check |
|---|---|
| Medical grade (there are 4 available) dry nitrogen for purging during brazing was used (constant 3 psi while brazing). | |
| 15% silver brazing material only. | |

## Refrigerant Piping

| Description | Check |
|---|---|
| All pipe materials were properly stored, capped, and clean. All burrs were removed after cutting and pipe ends were reamed before brazing. | |
| During refrigerant pipe installation, for each segment of pipe, a record was made of the pipe length (including expansion loops, offsets, double-back sections), and sizes, as well as the quantity and type of elbows used. | |
| Expansion loops, coils or other acceptable measures are provided where necessary to absorb temperature-change based pipe movement. | |
| A torque wrench and backup wrench were used to tighten all flare connections. | |
| The back side of all flares were lubricated with a small drop of PVE refrigeration oil before tightening flare fittings. | |
| Ensure all field made flares are 45°. Use factory-supplied flare nuts only. | |
| Pipe segments were secured to the structure using a combination of fixed and floating clamps, and all wall penetrations were sleeved. | |
| Pipe insulation was not compressed at any point. | |
| No oil traps, solenoid valves, sight glasses, filter driers, or any other unauthorized refrigerant specialties were present. | |
| (Optional) High quality R-410A rated full port ball valves (Schrader between the valve body and the indoor units) used at the indoor unit and at will in the refrigerant piping. | |

## Condensate Pump / Drain Installation

| Description | Check |
|---|---|
| Condensate drain installed on indoor units. Extended condensate piping material used is acceptable under local code. Insulated to prevent condensation. | |
| Indoor unit condensate drain pipes were installed correctly. | |
| Indoor unit with a gravity drain were level or slightly canted toward the drain connection and is supported properly. | |
| Drain lines are properly insulated to prevent condensation. | |

## Power Wire and Communication Cables

| Description | Check |
|---|---|
| Power wiring to the Single Zone outdoor unit is solid or stranded, and complies with all local and national electrical codes. | |
| Power wiring was connected to a single phase 208-230V source (Mega, Standard Efficiency) or 115V source (Mega 115V). | |
| Ground wire was installed and properly terminated at the unit. | |
| The power supplied was clean with voltage fluctuations within specifications. (±10% of nameplate). | |
| Power wiring to the Single Zone outdoor unit was installed per all local electrical code requirements. | |
| • Communication / connection (power) wiring from the outdoor unit to the indoor unit is minimum 14 gauge, four-conductor, stranded, shielded or unshielded.<br>• If shielded, must be grounded to chassis at the outdoor unit only. | |
| Wiring to the indoor unit was installed per all local electrical code requirements. | |
| Communication / connection (power) wiring from the outdoor unit to the indoor unit can be run in the same conduit. | |
| Communication type RS-485–BUS type. | |
| LG-supplied cable was used; or 22-3 AWG, twisted, stranded, unshielded cable (minimum) was used between the indoor unit and its zone controller. No cables were spliced, and no wire caps are present. | |
| Appropriate crimping tool was used to attach ring or spade terminals at all power wiring and control cable terminations. | |
| Power and control wires were run in the same conduit (outdoor unit to indoor only) as provided in the product installation manual. Power to outdoor unit and power/communications to indoor unit CANNOT be run in the same conduit. | |





Due to our policy of continuous product innovation, some specifications may change without notification.
©LG Electronics U.S.A., Inc., Englewood Cliffs, NJ. All rights reserved. "LG" is a registered trademark of LG Corp.

LG Electronics, U.S.A., Inc.
Air Conditioning Technologies
4300 North Point Parkway
Alpharetta, Georgia 30022
www.lghvac.com

IM_SZ_WallMounted_HEV2_HFV3_HXV2_11_22
Supersedes: IM_SZ_Wall_Mounted_HEV2_HFV3_HXV2_05_21
IM_SZ_Mega_Mega115V_HEV2_HXV2_04_20
IM_SZ_Mega_Mega115V_HEV2_HXV2_08_19
IM_SZ_Mega_Mega115V_HEV2_HXV_06_19
IM_WallMounted_All_11_15
IM_WallMounted_All_08_15

# WARRANTY CARD
# LG RESIDENTIAL / LIGHT COMMERCIAL SYSTEMS

**Outdoor Units = ODUs, Indoor Units = IDUs**
**Single-Zone System Components**
Art Cool™ Gallery: LAN***HVP IDUs / LAU***HVP ODUs
Art Cool Mirror Wall-Mounted: LAN***HSV3 IDUs / LAU***HSV3 ODUs, LAN***HSV4 IDUs / LSU***HSV4 ODUs
LAN***HSV5 IDUs / LSU***HSV5 ODUs
Art Cool Premier: LAN***HYV1 IDUs / LAU***HYV1 ODUs, LAN***HYV2 IDUs / LAU***HYV2 ODUs,
LAN***HYV3 IDUs / LAU***HYV3 ODUs
Ceiling-Cassette: LCN**7HV IDUs / LUU**7HV ODUs, LCN**7HV4 IDUs / LUU**7HV ODUs, LCN**8HV4 IDUs / LUU**7HV ODUs,
LCN**8HV4 IDUs / LUU**9HV ODUs, LCN**8HV IDUs / LUU**9HV ODUs, LCN**8HV4 IDUs / LUU**0HV ODUs
Ceiling-Concealed Duct: LHN**7HV IDUs / LUU**7HV ODUs, LHN**8HV IDUs / LUU**9HV ODUs,
LDN**7HV4 IDUs / LUU**7HV ODUs, LDN**7HV4 IDUs / LUU**9HV ODUs
Ceiling-Concealed High Static Duct: LHN**8HV / LUU**0HV
Contractor Inverter Vertical Air Handling Units: LVN**0HCV IDUs / LUU**0HCV ODUs, LVN**1HV4 IDUs / LUU**0HCV ODUs
LGRED° Ceiling-Cassette: LCN**8HV4 IDUs / LUU**0HHV ODUs, LCN**9HV IDUs / LUU**0HHV ODUs
LGRED° Ceiling-Concealed Duct: LDN**7HV4 IDUs / LUU**0HHV ODUs, LHN**8HV IDUs / LUU**0HHV ODUs
LGRED° Convertible Mid-Static Duct: LHN**8HV1 IDUs / LUU**0HHV ODUs
LGRED° Vertical Air Handling Units: LVN**1HV4 IDUs / LUU**0HHV ODUs, LVN**0HV IDUs / LUU**0HHV ODUs
Low-Wall Console: LQN***HV4 IDUs / LUU**7HV ODUs, LQN**0HV4 IDUs / LUU**0HV ODUs
Mega 115 Standard Wall-Mounted: LSN***HXV IDUs / LSU***HXV ODUs, LSN***HXV2 IDUs / LSU***HXV2 ODUs
Mega Standard Efficiency Wall-Mounted: LSN***HFV3 IDUs / LSU***HFV3 ODUs
Mega Standard Wall-Mounted: LSN***HEV1 IDUs / LSU***HEV1 ODUs, LSN***HEV2 IDUs / LSU***HEV2 ODUs
Standard Extended Piping Wall-Mounted: LSN***HLV IDUs / LSU***HLV ODUs, LSN***HLV3 IDUs / LSU***HLV3 ODUs
Standard High Efficiency Wall-Mounted: LSN***HSV4 IDUs / LSU***HSV4 ODUs, LSN***HSV5 IDUs / LSU***HSV5 ODUs
Standard Convertible Mid-Static Duct: LHN**8HV1 IDUs / LUU**0HV ODUs
Standard Vertical Air Handling Units: LVN***HV4 IDUs / LUU**8HV ODUs, LVN***HV IDUs / LUU**8HV ODUs,
LVN***HV4 IDUs / LUU**9HV ODUs, LVN***HV(4) IDUs / LUU**0HV ODUs,
LVN300HCV IDUs / LUU360HV ODUs, LVN***HV IDUs / LUU601HV

**Multi F / Multi F MAX Multi-Zone Outdoor Units / Branch Distribution Units**
Multi F with LGRED ODUs: LMU180HHV, LMU240HHV, LMU300HHV
Multi F MAX with LGRED ODUs: LMU36*HHV, LMU42*HHV, LMU480HHV
Multi F ODUs: LMU183HV, LMU180HV, LMU18CHV, LMU243HV, LMU240HV, LMU24CHV, LMU303HV, LMU30CHV, LMU363HV, LMU36CHV
Multi F MAX ODUs: LMU48*HV, LMU54*HV, LMU60*HV
Multi F MAX Branch Distribution Units: PMBD36**

**Multi F / Multi F MAX Multi-Zone Indoor Units**
Art Cool Mirror Wall-Mounted: IDUs: LAN***HSV4, LAN***HSV5
Art Cool Gallery IDUs: LMAN***HVP
Ceiling-Cassette IDUs: LCN097-127HV4, LMCN077HV, LMCN185HV, LMCN078HV, LCN098-128-188HV4
Convertible Mid-Static Duct LHN**8HV1 IDUs
High-Static Duct IDUs: LMHN***HV, LHN***HV
Low-Static Duct IDUs: LMDN**6HV, LDN***7HV4, LMDN**7HV4
Low-Wall Console IDUs: LQN***HV4, LMQN***HV
Standard Wall-Mounted IDUs: LMN***HVT, LSN***HSV4, LSN***HSV5
Vertical / Horizontal Air Handling Units: LMVN***HV, LVN***HV4

**Other Components**
Residential Energy Recovery Ventilator (ERV) Units: ARV*****RA6

**THIS LIMITED WARRANTY IS VALID IN THE UNITED STATES AND APPLIES ONLY TO THE ORIGINAL END USE PURCHASER OF THE SYSTEM AT THE SAME LOCATION ON WHICH THE SYSTEM WAS ORIGINALLY INSTALLED.**
**FOR A COPY OF THIS WARRANTY, VISIT WWW.LGHVAC.COM.**

LG Electronics U.S.A., Inc. ("LG") warrants that it will repair or replace defective internal functional parts ("Part[s]") of a qualified LG RESIDENTIAL / LIGHT COMMERCIAL System (each, a "System") that fail during the warranty period if such parts prove to be defective due to improper materials and / or manufacturing workmanship under normal application, installation, use and service conditions. This Limited Warranty shall apply to Systems sold by LG in the continental United States, Alaska, and Hawaii and extends only to the original end use purchaser of the System at the same location on which the System was originally installed (all such persons hereinafter referred to as "Customer"). A qualified System is one that has been (a) installed by an individual or company that (i) has successfully completed LG Residential / Light Commercial product training conducted at an LG Factory Owned Academy or authorized LG Partner Academy (the "Training Requirements"), and (ii) holds a current government issued license that authorizes the individual or company to service and install heating, ventilation, and air conditioning equipment in the state where the System is located, if such a license is required; and (b) installed, started, operated and serviced in compliance with (i) guidelines set forth in installation, operation, maintenance and engineering publications made available by LG, (ii) software based design programs made available by LG, (iii) applicable local, state and federal law and, (iv) applicable building, mechanical, plumbing and electrical codes and best industry standards and practices.

## LIMITED WARRANTY PERIOD

1. STANDARD FIVE (5) YEAR WARRANTY FOR A QUALIFIED SYSTEM - The Part(s) of a qualified System, including the compressor, are warranted for a period (the "Standard Parts Warranty Period") ending five (5) years after the date of original installation. In absence of proof of installation the warranty date will end five (5) years from the date of manufacture.
2. ADDITIONAL TWO (2) YEAR COMPRESSOR PART WARRANTY - The Compressor is warranted for an additional two (2) year period after the end of the applicable Standard Part Warranty Period (the "Compressor Warranty Period").

## EXTENDED WARRANTY

The Standard Warranty Period and the Compressor Warranty Period are extended to a total of ten (10) years (the "Extended Warranty Period") for qualified Systems that have been (a) installed by a party that has completed the Training Requirements, (b) installation is pursuant to LG's published instructions, and (c) product is registered within 60 days of startup at www.lghvac.com.

## HOW DOES THIS LIMITED WARRANTY APPLY

1. The remedies set forth in the Limited Warranty are the sole and exclusive remedies of Customer for defective Part(s) during the applicable warranty period.
2. Replacement Part(s) shall be of like kind and quality and may be new or remanufactured. Replacement Part(s) shall be warranted in accordance with this Limited Warranty for the remaining portion of the original System's warranty period or ninety (90) days after installation of the Replacement Part(s), whichever is longer.
3. Defective Part(s) must be held for a period of at least ninety (90) days and may be requested to be returned to LG. Any such returned defective Part(s) become the property of LG. This Limited Warranty covers the transportation cost for any returns of defective Parts to the extent requested by LG and for reshipment of any replaced Part(s) to the Customer, but does not cover expedited shipping, risk of loss including shipping damage or loss for return of the defective Part(s) to LG or its authorized agent and any other costs associated with installation, removal, or re-installation of the Part(s). If any Part(s) returned to LG are found not to be defective or the applicable warranty period has expired, the Customer shall be responsible for return shipping cost.
4. This Limited Warranty does not cover charges for labor or any other costs incurred in connection with this Limited Warranty, including, but not limited to, fuel and transportation costs, lodging, refrigerant, etc., incurred in the trouble shooting, maintenance, repair, removing, replacing, installing, complying with local building and electric codes, handling, or replacement of Part(s) and the complete System or for any costs or expenses for providing temporary or substitute equipment or service during periods of malfunction or non-use pending replacement or completion of repairs under this Limited Warranty.

5. LG will not be responsible or liable for any costs for any parts, labor, supplies, or refrigerant necessary to alter, rework, or modify the System to prepare the System for proper commissioning.
6. This Limited Warranty shall not be enlarged, extended, or effected, and no additional obligation or liability shall be created by LG providing technical advice, information, service(s), applications suggestions, or equipment modifications to any person or entity associated with the installation, service, repair, maintenance or operation of the System.

## LIMITED WARRANTY EXCLUSIONS AND LIMITATIONS

The Limited Warranty is void and of no effect, and LG will have no liability hereunder to any Customer or third party, to the extent any of the following occur:

1. A System is sold and/or installed outside the continental United States, Alaska, and Hawaii or is removed from the location where it was originally installed.
2. A System is sold AS IS or WITH ALL FAULTS or this Limited Warranty is otherwise expressly disclaimed.
3. Any serial number of any System or any Part(s) thereof is altered, defaced or removed.
4. The System is misused, neglected, or the Customer fails to operate the System as specified by the manufacturer's instructions, or to properly perform all recommended preventive and routine maintenance as defined in LG published documents. Routine maintenance includes procedures such as cleaning the condensate drain system, evaporator, and condenser coils, and cleaning and / or replacing of air filters or belts.
5. Any installation, repair, maintenance or service is performed by unauthorized or unqualified third party service providers.
6. Damage and / or failure caused by a power surge (whether caused by lightning or fluctuations in or interruptions of electrical power), faulty power supply, fire, water, wind, impact damage from projectiles, earthquake, flooding, theft, riot, or any acts of God.
7. Damage and / or failure caused by improper wiring, installation, or handling of the System while in transit or in a storage facility.
8. Damage and / or failure caused by System exposure to corrosive chemical vapors and / or liquids, contaminates, or any corrosive agent including, but not limited to, chlorine, formaldehyde, acetaldehyde, sulfur, silicone, acetic acid, etc.
9. Damage and / or failure to the System due to operating in a wet environment or in harmful environmental conditions including sea or salt-water.
10. Damage caused by ice or frozen or broken water pipes.
11. Damage due to ordinary wear and tear.
12. Damage and / or failure as result of exposure to excessive or harmful volatile organic compounds (VOCs) or where damage and / or failure occur due to improper air make up or supply or inadequate ventilation.
13. Damage and / or failure caused by improper application of the System and / or the improper matching of any component of the System or other failure to comply with the manufacturer's instructions or recommendations.
14. Damage and/or failure caused by modification and/or alteration of the System or any component of the System in order to meet or circumvent government codes or regulations.
15. Maintenance or field provided Part(s) other than those provided by LG such as filters, field installed components or accessories including, but not limited to, refrigerant piping, drain lines, control and electrical wiring, ductwork, etc.
16. Damage and / or failure due to using unapproved refrigerant types or recycled refrigerant.
17. Damage and / or failure caused by improper adjustments of user controls.
18. Acts, omissions, and conduct of any and all third parties including, but not limited to, the installing contractor and any repairs, service or maintenance by unauthorized or unqualified persons.
19. The System has been purchased online from a source not expressly authorized by LG.

## LIMITED WARRANTY CONDITIONS

The extended Limited Warranty for the Systems shall be valid only if all of the following conditions are met:

1. Vacuum drying at commissioning followed LG's published guidelines.
2. All brazing of pipe-work was performed with nitrogen flow in pipe to eliminate oxidation.
3. Correct refrigerant charge used at time of commissioning.
4. Correct refrigerant charge used after any repairs (no leaks in the System).
5. Equipment was operating within LG's published and recommended temperature limits.
6. Equipment was not operated during the construction phase.

## LIMITATION OF WARRANTY SCOPE

EXCEPT TO THE EXTENT PROHIBITED BY APPLICABLE LAW, THIS LIMITED WARRANTY IS EXCLUSIVE AND IN LIEU OF ALL OTHER EXPRESS OR IMPLIED WARRANTIES, INCLUDING BUT NOT LIMITED TO ANY IMPLIED WARRANTY OF MERCHANTABILITY, NON-INFRINGEMENT OF THIRD PARTY RIGHTS AND FITNESS FOR A PARTICULAR PURPOSE.

UNDER NO CIRCUMSTANCES SHALL LG BE LIABLE FOR ANY INDIRECT, INCIDENTAL, SPECIAL OR CONSEQUENTIAL DAMAGES INCLUDING, WITHOUT LIMITATION, LOST GOODWILL, LOST REVENUE OR PROFITS, WORK STOPPAGE, SYSTEM FAILURE, IMPAIRMENT OF OR DAMAGE TO OTHER EQUIPMENT OR GOODS, COST OF REMOVAL AND REINSTALLATION OF THE SYSTEM, LOSS OF USE, INJURY TO PERSONS OR PROPERTY ARISING OUT OF OR RELATED TO THE SYSTEM. LG'S TOTAL LIABILITY, IF ANY, UNDER THIS LIMITED WARRANTY SHALL NOT EXCEED THE INVOICE VALUE PAID BY THE CUSTOMER FOR THE SYSTEM WHICH IS THE SUBJECT OF A CLAIM OR DISPUTE.

SOME STATES DO NOT ALLOW THE EXCLUSION OR LIMITATION OF INCIDENTAL OR CONSEQUENTIAL DAMAGES, OR ALLOW DISCLAIMERS OF IMPLIED WARRANTIES, SO THE ABOVE LIMITATIONS OR EXCLUSIONS MAY NOT APPLY TO THE CUSTOMER. THIS LIMITED WARRANTY GIVES THE CUSTOMER SPECIFIC LEGAL RIGHTS. CUSTOMERS MAY ALSO HAVE OTHER RIGHTS THAT VARY FROM STATE TO STATE.

No one is authorized by LG to modify this Limited Warranty in any respect or to create for LG any other obligation or liability in connection with the System unless done so in a written agreement with the signature of the President or a Senior Vice President of LG. Customer agrees that any purported change by LG shall be null and void unless the President or a Senior Vice President of LG shall have expressly so agreed to such change in writing.

If any clause of the Limited Warranty is found to be illegal or unenforceable, that clause will be severed from this Limited Warranty and the remainder of the Limited Warranty will be given full force and effect.

## ASSERTION OF CLAIMS

The assertion of claims under this Limited Warranty is expressly conditioned upon the Customer: (i) informing the authorized reseller / distributor of the System in writing of the alleged claim during the applicable warranty period, or (ii) sending written notification of the alleged claim directly to the address stated below during the applicable warranty period in the event that the authorized reseller / distributor no longer exists (e.g. due to discontinuance of business or bankruptcy). Any such assertion of claims must be accompanied by the original sales receipt as the proof of purchase and time of installation of the System. The assertion of the claim must occur within thirty (30) days from the date that the claim is identified. The return of Part(s) may only occur after the written authorization of LG has been given.

## OBTAINING WARRANTY PARTS AND ADDITIONAL INFORMATION

Contact the licensed HVAC contractor who installed the System, or the nearest licensed HVAC contractor, dealer, or distributor (visit www.lghvac.com for contact information) to report any defect within the applicable warranty period. Proof of the installation date by a licensed HVAC contractor is required when requesting warranty parts. Present the sales receipt, building permit, or other documentation that establishes proof and date of installation. If proof of installation date cannot be rendered, this Limited Warranty shall be deemed to begin on the date of manufacture.

## DISPUTE

Except to the extent prohibited by applicable law, the Customer agrees she / he will not bring any action, regardless of form, arising out of or in any way connected with this Limited Warranty more than one (1) year after the cause of action has occurred.

## ARBITRATION

The laws of the State of New York govern this Limited Warranty and all of its terms and conditions, without giving effect to any conflicts of laws principles. All actions at law or in equity arising out of or relating to these terms and conditions shall be submitted to confidential arbitration in New York, New York. Arbitration under this Limited Warranty shall be conducted under the rules then prevailing of the American Arbitration Association. The arbitrator's award shall be binding and may be entered as a judgment in any court of competent jurisdiction. To the fullest extent permitted by applicable law, no arbitration under this Limited Warranty shall be joined to any legal proceeding or arbitration involving any other party, whether through class arbitration proceedings or otherwise.

## VALIDITY

This Limited Warranty shall be valid from April 1, 2017 and shall apply to all Residential / Light Commercial Systems sold to Customers and installed and started up on or after this date. Proof of installation date must be provided upon request. LG reserves the right to unilaterally amend the provisions, clauses or applications of this Limited Warranty from time to time without notice, however any such changes shall not be retrospective.

WD_LG_Res_Lgt_Comm_LTD_EXT_01_2024
Supersedes: WD_LG_Res_Lgt_Comm_LTD_EXT_09_2023
WD_LG_Res_Lgt_Comm_LTD_EXT_07_2023
WD_LG_Res_Lgt_Comm_LTD_EXT_06_2023
WD_LG_Res_Lgt_Comm_LTD_EXT_05_2023
WD_LG_Res_Lgt_Comm_LTD_EXT_03_2023
WD_LG_Res_Lgt_Comm_LTD_EXT_01_2023
WD_LG_Res_Lgt_Comm_LTD_EXT_07_2022
WD_LG_Res_Lgt_Comm_LTD_EXT_10_2021
WD_LG_Res_Lgt_Comm_LTD_EXT_05_2021
WD_LG_Res_Lgt_Comm_LTD_EXT_01_2021
WD_LG_Res_Lgt_Comm_LTD_EXT_09_2020
WD_LG_Res_Lgt_Comm_LTD_EXT_04_2020
WD_LG_Res_Lgt_Comm_LTD_EXT_03_2020A
WD_LG_Res_Lgt_Comm_LTD_EXT_03_2020
WD_LG_Res_Lgt_Comm_LTD_EXT_09_19
WD_LG_Res_Lgt_Comm_LTD_EXT_07_19
WD_LG_Res_Lgt_Comm_LTD_EXT_05_19
WD_LG_Res_Lgt_Comm_LTD_EXT_11_18
WD_LG_Res_Lgt_Comm_LTD_EXT_03_18