IOM

PROJECT: **VA – Renovate Logistics – B1**

LOCATION: **Fayetteville, AR**

ENGINEER: **Harrell Design Group**

MECHANICAL CONTRACTOR: **Comfort Systems**

EQUIPMENT: **AHU**
Tagged: 1-AHU-LOG

DATE: **June 12, 2026**

Josh Davis
josh@airetechcorp.com
(479) 756-8600

3241 W. Huntsville Avenue ● Springdale, AR 72762
Voice (479)756-8600 ● Fax (479)751-0576

Installation, Start-Up and Service Instructions

CONTENTS

Page
SAFETY CONSIDERATIONS 2
Servicing 4
Evacuation, Removal, and Repair 4
Charging 4
A2L REFRIGERANT INFORMATION 4
Detection of Flammable Refrigerants 4
Ignition Source Mitigation 5
Minimum Conditioned Space Area 5
- CALCULATING THE MINIMUM CONDITIONED SPACE AREA

Duct System and Ventilation 6
INTRODUCTION 6
Unit Identification 6
PRE-INSTALLATION 13
Rigging 13
Suspended Units 13
Service Clearance 13
Condensate Drain 13
External Vibration Isolators 13
INSTALLATION 17
Base Rail Split 17
Mixing Box 18
- DAMPER ACTUATORS
- DUCTWORK ATTACHMENT

Install Condensate Drain 20
Variable Frequency Drive (VFD) 20
Install Fan Motor 20
- JUNCTION BOX CONDENSATE PREVENTION
- POWER KNOCKOUTS

Motor Nameplate Data 21
Fan Motor Starter 22
- WIRING
- START-UP AND TEST

Disconnect 22
- DISCONNECT WIRING
- START-UP AND TEST

VFD 23
- FIELD-WIRING ACH580
- START-UP AND TEST
- ACH580 VFD OPERATION
- START UP CHANGING PARAMETERS INDIVIDUALLY
- VFD MODES
- ACH580 STANDARD DISPLAY MODE
- PARAMETERS MODE
- CHANGED PARAMETERS MODE
- DRIVE PARAMETER BACKUP MODE
- UPLOAD ALL PARAMETERS
- DOWNLOAD ALL PARAMETERS FROM BACKUP
- CLOCK SET MODE
- I/O SETTINGS MODE

VFD Diagnostics 30
- FAULTS (RED LED LIT)
- ALARMS (GREEN LED FLASHING)
- CORRECTING FAULTS
- CORRECTING ALARMS
- CONTROL PANEL CLEANING
- BATTERY REPLACEMENT
- ACH180 VFD STANDARD KEYPAD DETAIL

Submenus 30
Options Menu and Main Menu 31
ACH180 VFD Diagnostics 32
- FAULTS (RED LED LIT)

ACH580 Maintenance Schedule 34
- MAIN FAN REPLACEMENT IP21 AND IP55 (UL TYPE 1 AND UL TYPE 12)
- AUXILIARY COOLING FAN REPLACEMENT IP21 AND IP55 (UL TYPE 1 AND UL TYPE 12)
- RECOMMENDED MAINTENANCE (ACH180)

Control Panel Cleaning 38
Cleaning the Heatsink 39
Replacing the Cooling Fans 39
Install Sheaves on Motor and Fan Shafts 40
- ALIGNMENT

Install V-Belts 42
- TENSION MEASUREMENT PROCEDURE

Water and Steam Coil Piping Recommendations . 45
- GENERAL
- WATER COILS
- STEAM COILS

Coil Freeze-Up Protection 50
- WATER COILS
- STEAM COILS
- INNER DISTRIBUTING TUBE STEAM COILS
- IDT STEAM COIL PIPING

Refrigerant Piping, Direct-Expansion (DX) Coils . . 52
- SUCTION PIPING
- EXPANSION VALVE PIPING
- HOT GAS BYPASS
- UNLOADING CONSIDERATIONS
- SPECIAL PIPING WITH 4 SPLITS PER COIL

Electric Heaters 57
- CONNECT POWER AND CONTROL WIRES

Discharge Modification 61
START-UP 62
Check List 62

Manufacturer reserves the right to discontinue, or change at any time, specifications or designs without notice and without incurring obligations.

- FILTERS
- FANS
- COILS

SERVICE 63
General 63
Fan Motor Replacement 63
Coil Cleaning 63
- DETERGENT
- STEAM

Winter Shutdown (Chilled Water Coil Only) 63
- ANTIFREEZE METHODS OF COIL PROTECTION
- AIR DRYING METHOD OF COIL PROTECTION (UNIT AND COIL MUST BE LEVEL FOR THIS METHOD.)

Field-Installed Coils (39LA,LD Only) 64
Coil Removal 64
- HORIZONTAL UNIT SLANT COIL REMOVAL (39LA UNITS)
- VERTICAL UNIT SLANT COIL REMOVAL (39LD UNITS)
- HORIZONTAL OR VERTICAL UNIT — DUAL COIL REMOVAL (39LA, LD UNITS — SIZE 25)
- HORIZONTAL OR VERTICAL UNIT — VERTICAL COIL REMOVAL (39LB,LC,LF,LH UNITS)

Changing Coil Hand 68
- NU-FIN COILS
- DIRECT EXPANSION COILS
- CHILLED WATER AND HOT WATER COILS
- STEAM INNER DISTRIBUTING TUBE COILS
- PIPING

Filters 69
- FILTER SECTIONS

Fan Shaft Bearing Removal 70
Fan and Shaft Removal 72
Lubrication 72
- MOTORS
- BEARINGS

Fan Sled Disassembly 73
LEAK DETECTION AND DISSIPATION 74
Overview 74
Dissipation System Components 74
VARIABLE FAN DRIVE (VFD) 77
FACTORY WIRING 77
A2L Enclosure Wiring 77
- SENSOR

FIELD WIRING 78
General 78
Shipping Splits 78
BUILDING MANAGEMENT SYSTEM (BMS) 79
SMOKE DETECTOR OVERRIDE 79
DECOMMISSIONING 79
START-UP CHECKLIST — 39L AHU UNITS CL-1

SAFETY CONSIDERATIONS

Air-handling equipment is designed to provide safe and reliable service when operated within design specifications. Improper installation, adjustment, alteration, service maintenance, or use can cause explosion, fire, electrical shock, or other conditions which may cause personal injury or property damage. Use good judgment and follow safe practices as outlined below. Consult a qualified installer, service agency, or your distributor or branch for information or assistance. The qualified installer or agency must us factory-authorized kits, accessories, or replacement parts when modifying this product. Refer to individual instructions packaged with the kits or accessories when installing. To avoid injury to personnel and damage to equipment or property when operating this equipment, use good judgment and follow safe practices as outlined below.

Follow all safety codes. Wear safety glasses, protective clothing, and work gloves. Have a fire extinguisher available. Read these instructions thoroughly and follow all warnings or cautions included in literature and attached to the unit. Affix any labels that ship with the unit or accessory installation instructions to the unit. Consult local building codes and appropriate national electrical codes (in U.S.A. ANSI/NFPA70, National Electrical Code (NEC); in Canada, CSAC22.1) for special requirements.

Recognize safety information. This is the safety-alert symbol ⚠. When you see this symbol on the unit and in instructions or manuals, be alert to the potential for personal injury. Under-stand the signal words DANGER, WARNING, and CAUTION. These words are used with the safety-alert symbol. DANGER identifies the most serious hazards which will result in severe personal injury or death. WARNING signifies hazards which could result in personal injury or death. CAUTION is used to identify unsafe practices which may result in minor personal injury or product and property damage. NOTE is used to high-light suggestions which will result in enhanced installation, reliability, or operation.

The following symbols may be seen on the equipment:

Unit Label Safety Symbols

	WARNING	This symbol shows that the appliance used a flammable refrigerant. If the refrigerant is leaked and exposed to an ignition source, there is a risk of fire.
	CAUTION	This symbol shows that the operation manual should be read carefully.
	CAUTION	This symbol shows that the service personnel should be handling the equipment with reference to the installation manual.
	CAUTION	This symbol shows that the information is available such as the operating manual or installation manual.

⚠ DANGER

NEVER enter an enclosed fan cabinet or reach into a unit while the fan is running.

LOCK OPEN AND TAG the fan motor power disconnect switch before working on a fan. Take fuses with you and note removal on tag. Electric shock can cause personal injury or death.

LOCK OPEN AND TAG the electric heat coil power disconnect switch before working on or near heaters.

⚠ WARNING

CHECK the assembly and component weights to be sure that the rigging equipment can handle them safely. Note also, the centers of gravity and any specific rigging instructions.

CHECK for adequate ventilation so that fumes will not migrate through ductwork to occupied spaces when welding or cutting inside air-handling unit cabinet or plenum.

WHEN STEAM CLEANING COILS be sure that the area is clear of personnel.

DO NOT attempt to handle access covers and removable panels on outdoor units when winds are strong or gusting until you have sufficient help to control them. Make sure panels are properly secured while repairs are being made to a unit.

DO NOT remove access panel fasteners until fan is completely stopped. Pressure developed by a moving fan can cause excessive force against the panel which can injure personnel.

DO NOT work on dampers until their operators are disconnected.

BE SURE that fans are properly grounded before working on them.

⚠ WARNING

UNIT OPERATION AND SAFETY HAZARD

Failure to follow this warning could cause personal injury, death and/or equipment damage.

R-454B is an A2L refrigerant. All service equipment or components must be A2L refrigerant rated. Do not use non-A2L rated equipment or components on R-454B refrigerant equipment.

⚠ AVERTISSMENT

RISQUE DE FONCTIONNEMENT ET DE SÉCURITÉ DE L'APPAREIL

Le non-respect de cet avertissement peut entraîner des blessures corporelles, la mort et/ou des dommages matériels.

Le R-454B est un réfrigérant A2L. Tous les équipements ou composants d'entretien doivent être homologués A2L. N'utilisez pas d'équipements ou de composants non homologués A2L sur un équipement fonctionnant au R-454B.

⚠ WARNING

RISK OF FIRE — FLAMMABLE REFRIGERANT

Do not use means to accelerate the defrosting process or to clean, other than those recommended by the manufacturer.

Do not pierce or burn.

Be aware that refrigerants may not contain an odor.

⚠ AVERTISSMENT

RISQUE D'INCENDIE — RÉFRIGÉRANT INFLAMMABLE

N'utilisez aucun moyen pour accélérer le dégivrage ou pour nettoyer autre que ceux recommandés par le fabricant.

Ne pas percer ni brûler.

Sachez que les réfrigérants peuvent être inodores.

⚠ WARNING

DO NOT USE TORCH to remove any component. System contains oil and refrigerant under pressure.

To remove a component, wear protective gloves and goggles and proceed as follows:

a. Shut off electrical power to unit.
b. Recover refrigerant to relieve all pressure from system using both high-pressure and low pressure ports.
c. Traces of vapor should be displaced with nitrogen and the work area should be well ventilated. Refrigerant in contact with an open flame produces toxic gases.
d. Cut component connection tubing with tubing cutter and remove component from unit. Use a pan to catch any oil that may come out of the lines and as a gage for how much oil to add to the system.
e. Carefully unsweat remaining tubing stubs when necessary. Oil can ignite when exposed to torch flame.

Failure to follow these procedures may result in personal injury or death.

⚠ CAUTION

DO NOT re-use compressor oil or any oil that has been exposed to the atmosphere. Dispose of oil per local codes and regulations. DO NOT leave refrigerant system open to air any longer than the actual time required to service the equipment. Seal circuits being serviced and charge with dry nitrogen to prevent oil contamination when timely repairs cannot be completed. Failure to follow these procedures may result in damage to equipment.

⚠ CAUTION

SECURE drive sheaves with a rope or strap before working on a fan to ensure that rotor cannot free-wheel.

DO NOT restore power to unit until all temporary walkways inside components have been removed.

NEVER pressurize equipment in excess of specified test pressures.

PROTECT adjacent flammable material when welding or flame cutting. Use sheet metal or asbestos cloth to contain sparks. Have a fire extinguisher at hand and ready for immediate use.

⚠ WARNING

This equipment may contain a UV-C LAMP. Look for this UVC warning on panels or doors before opening.

Disconnect UVC power before opening access doors, removing panels, or installing, maintaining, or servicing UVC lamps or fixtures. Do not operate UVC with open access doors or with panels removed. Do not operate UVC outside of unit cabinet. Exposure to UVC can cause harm to the eyes and skin. Review the UVC lamp accessory installation instructions for details on installing, testing, and maintaining UVC lamps.

⚠ AVERTISSMENT

Cet équipement peut contenir une LAMPE UV-C. Recherchez ces aver-tissements UVC sur les panneaux ou les portes avant de les ouvrir.

Débran-chez l'alimentation UVC avant d'ou-vrir les portes d'accès, de retirer les panneaux ou d'installer, d'entretenir ou de réparer des lampes ou des lumi-naires UVC. N'utilisez pas de lampes UVC en dehors du boîtier de l'appar-eil. L'exposition aux UVC peut endommager les yeux et la peau. Consultez les instructions d'installation des accessoires de lampe UVC pour plus de détails sur l'installation, le test et l'entretien des lampes UVC.

IMPORTANT: The installation of air-handling units and all associated components, parts, and accessories which make up the installation and subsequent maintenance shall be in accordance with the regulations of ALL authorities having jurisdiction and MUST conform to all applicable codes. It is the responsibility of the installing contractor to determine and comply with ALL applicable codes and regulations. Field-supplied motors should be Underwriters Laboratories (UL) or Canadian Standards Association (CSA) approved. Field wiring must comply with National Electrical Code (NEC) and all local requirements.

Servicing

Prior to, and during the work being performed on an appliance containing A2L refrigerants, the area must be checked with an appropriate refrigerant detector to ensure that the person or persons performing work are aware of a potentially toxic or flammable atmosphere. The area must also be surveyed to ensure there are no flammable hazards or ignition risks. “No Smoking” signs shall be displayed.

Should any hot work need to be performed on the refrigerant system, or associated parts, appropriate fire extinguishing equipment shall be available nearby. Have a dry powder or CO_2 fire extinguisher adjacent to the charging area.

All maintenance staff and others working in the local area shall also be instructed on the nature of work being carried out. Work in confined spaces shall be avoided wherever possible.

Evacuation, Removal, and Repair

When breaking into the refrigerant circuit to make repairs – or for any other purpose – conventional procedures shall be used. However, for flammable refrigerants it is important that best practice be followed, since flammability is a consideration.

The following procedure shall be adhered to:

1. Safely remove refrigerant following local and national regulations.
2. Evacuate.
3. Purge the circuit with inert gas (optional for A2L refrigerants).
4. Evacuate (optional for A2L refrigerants).
5. Continuously flush or purge with inert gas when using flame to open circuit.
6. Open the circuit.

For appliances containing flammable refrigerants, purging shall be achieved by breaking the vacuum in the system with oxygen-free nitrogen and continuing to fill until the working pressure is achieved, then venting to atmosphere, and finally pulling down to a vacuum. This process may need to be repeated several times until the system is free from refrigerant. When the final oxygen-free nitrogen charge is used, the system shall be vented down to atmospheric pressure to enable work to take place.

The refrigerant charge shall be recovered into the correct recovery cylinders if venting is not allowed by local and national codes. Ensure that the correct number of cylinders for holding the total system charge is available. All cylinders to be used are designated for the recovered refrigerant and labeled for that refrigerant. Cylinders shall be complete with pressure-relief valve and associated shut-off valves in good working order. Empty recovery cylinders are evacuated and, if possible cooled before recovery occurs.

The recovery equipment shall be in good working order with a set of instructions concerning the equipment that is at hand and shall be suitable for the recovery of the flammable refrigerant. If in doubt, the manufacturer should be consulted. In addition, a set of calibrated weighing scales shall be available and in good working order. Hoses shall be complete with leak-free disconnect coupling and in good condition.

The recovered refrigerant shall be processed according to local legislation in the correct recovery cylinder, and the relevant waste transfer not arranged. Do not mix refrigerants in recovery units, and especially not in cylinders.

If compressors or compressor oils are to be removed, ensure that they have been evacuated to an acceptable level to make certain that flammable refrigerant does not remain within the lubricant. The compressor body shall not be heated by an open flame or other ignition sources to accelerate this process. When oil is drained from a system, it shall be carried out safely.

At no point during this process should the outlet for the vacuum pump be close to any potential ignition sources, and ventilation shall be available.

Charging

In addition to conventional charging procedures, the following requirements shall be followed.

1. Ensure that contamination of different refrigerants does not occur when using charging equipment. Hoses or lines shall be as short as possible to minimize the amount of refrigerant contained in them.
2. Cylinders shall be kept in an appropriate position according to the instructions.
3. Ensure that the refrigerating system is earthed prior to charging the system with refrigerant.
4. Label the system when charging is complete (if not already).
5. Extreme care shall be taken not to overfill the refrigerating system.
6. Prior to recharging the system, it shall be pressure-tested with the appropriate purging gas. The system shall be leak tested on completion of charging but prior to commissioning. A follow up leak test shall be carried out prior to leaving the site.

A2L REFRIGERANT INFORMATION

This equipment may contain R-454B or R-32, mildly flammable refrigerants classified as A2L. Know the refrigerant type used with this unit and ensure all instructions are read prior to storing, installing, or servicing this equipment. For units containing R-410A or R-22, information and instructions regarding A2L refrigerants within this document may be disregarded.

Detection of Flammable Refrigerants

Never use potential sources of ignition for the search or detection of refrigerant leaks. This is universal for both A2L and non-A2L

refrigerants. A halide torch or other detectors using open flames shall not be used, under any circumstance.

The following leak detection methods are deemed acceptable for all refrigerant systems.

Electronic leak detectors may be used to detect refrigerant leaks, but in the case of flammable refrigerants the sensitivity may not be adequate or require recalibration. Detection equipment shall be calibrated in a refrigerant-free area. Ensure that the detector is not a potential source of ignition and is suitable for the refrigerant used. Leak detection equipment shall be set at a percentage of the LFL of the refrigerant and shall be calibrated to the refrigerant employed, and the appropriate percentage of gas (25% max.) is confirmed. Leak detection fluids are also suitable for use with most refrigerants but the use of detergents containing chlorine shall be avoided as the chlorine may react with the refrigerant and corrode the copper pipework. Examples of leak detection fluids:

- Bubble method.
- Fluorescent method agents.

⚠CAUTION

If a leak is suspected, all naked flames shall be removed/ extinguished.

⚠PRUDENCE

Si une fuite est suspectée, toutes les flammes nues doivent être retirées/éteintes.

If a leakage of refrigerant is found which requires brazing, all of the refrigerant shall be recovered from the system, or isolated (by means of shut off valves) in a part of the system away from the leak and leak repair. Removal of refrigerant will follow the steps outlined in below sections.

⚠CAUTION

Do not use torch to remove any component that contains a refrigerant or oil charge. Ensure the refrigerant or oil charge is fully evacuated or isolated from any hot work.

⚠PRUDENCE

N'utilisez pas de chalumeau pour retirer un composant contenant une charge de réfrigérant ou d'huile. Assurez-vous que la charge de réfrigérant ou d'huile est entièrement évacuée ou isolée de tout travail à chaud.

Ignition Source Mitigation

No person carrying out work on an appliance containing A2L refrigerants which involves exposing any pipe work shall use any sources of ignition in such a way that can lead to the risk of fire or explosion. All possible ignition sources, including cigarette smoking, must be kept sufficiently far away from the site of work. This includes, but is not limited to, installation, repair, removal, and disposal of equipment.

Work shall be performed under a controlled procedure to minimize the risk of flammable gas or vapors being present while work is performed.

Minimum Conditioned Space Area

The space area served by ducted equipment with A2L refrigerant is restricted by building code. This is based on the refrigerant volume that is potentially releasable to the conditioned space through the duct system.

Determine the conditioned space area by calculating the floor area (room length x room width) of all spaces served by a common duct system and adding them all together to get the total conditioned space area. Compare the calculated total conditioned space area to the minimum conditioned space area (TA_{min}) calculated using equations 1 and 2 from UL 60335-2-40, 3rd Edition Annex GG. The total system operating charge is not identified in just the Air Handler unit and must be determined once the full system is assembled to include the Air Handler Unit (AHU) coil, interconnecting piping and condensing unit. When multiple circuits are utilized, the "worst-case" circuit is to be used.

CALCULATING THE MINIMUM CONDITIONED SPACE AREA

The maximum refrigerant charge based on the room area for the total conditioned space shall be in accordance with the following:

Equation 1: $m_{max} = SF \times LFL \times H \times TA$

or

The required minimum total conditioned room area TA_{min} of installed appliance with refrigerant charge m_c (kg) shall be in accordance with the following:

Equation 2: $TA_{min} = m_c / (SF \times LFL \times H)$

where:

SF	=	Safety Factor of 0.25
m_{max}	=	Allowable maximum refrigerant charge in the system (kg)
m_c	=	Refrigerant charge in the appliance (kg)
TA_{min}	=	required minimum area of the total conditioned space (square meters [m^2])
H	=	Height of the room (2.2m)
TA	=	Area of the total conditioned space (m^2)
LFL	=	Lower Flammable Limit (kg/m^3)

NOTE: If ***TA*** is smaller than TA_{min}, additional ventilation is required.

Reference Table 1 for example TA_{min} at various charge increments. The minimum conditioned space height is based on 2.2 meters.

The charge must include the AHU coil, interconnecting piping and the condensing unit. For this example, the TA_{min} is calculated using (6 x Charge [kg]) or (29.35 x Charge [lb]).

Table 1 — TA_{min} at Various Charge Increments

CHARGE		TA_{min}	
lb	**kg**	**Square Feet (ft^2)**	**Square Meters (m^2)**
5	**2.27**	147	13.61
15	**6.80**	440	40.82
25	**11.34**	734	68.04
35	**15.88**	1027	95.25
45	**20.41**	1321	122.47
55	**24.95**	1614	149.69
65	**29.48**	1908	176.90
75	**34.02**	2201	204.12
85	**38.56**	2495	231.33
95	**43.09**	2788	258.55
105	**47.67**	3082	286.02
115	**52.13**	3375	312.80
125	**56.70**	3669	340.20
135	**61.25**	3962	367.51
145	**65.77**	4256	394.59
155	**70.31**	4549	421.88
160	**72.57**	4696	435.45
170	**77.11**	4990	462.66

Duct System and Ventilation

Equipment with A2L refrigerant should be utilized with an air distribution system with a fully ducted supply and return. If an open (plenum) return is required, refer to local or national building code for requirements for using open plenum return duct systems with equipment with A2L refrigerant.

⚠ CAUTION

Do not install ignition sources in the duct distribution system.

⚠ PRUDENCE

N'installez pas de sources d'inflammation dans le système de conduit de distribution.

Ensure that the area is in the open or that it is adequately ventilated before breaking into the system or conducting any hot work. A degree of ventilation shall continue during the period that work is carried out. The ventilation should safely disperse any released refrigerant and preferably expel to external atmosphere. Should an auxiliary ventilation system be present, check that it is operating correctly and no outlets are obstructed.

INTRODUCTION

Unit Identification

The 39L units are identified by the 18-digit part number listed on the serial plate. The part number describes all components, coil, motor, drive, and control selections. See Fig. 1-9 for unit identification.

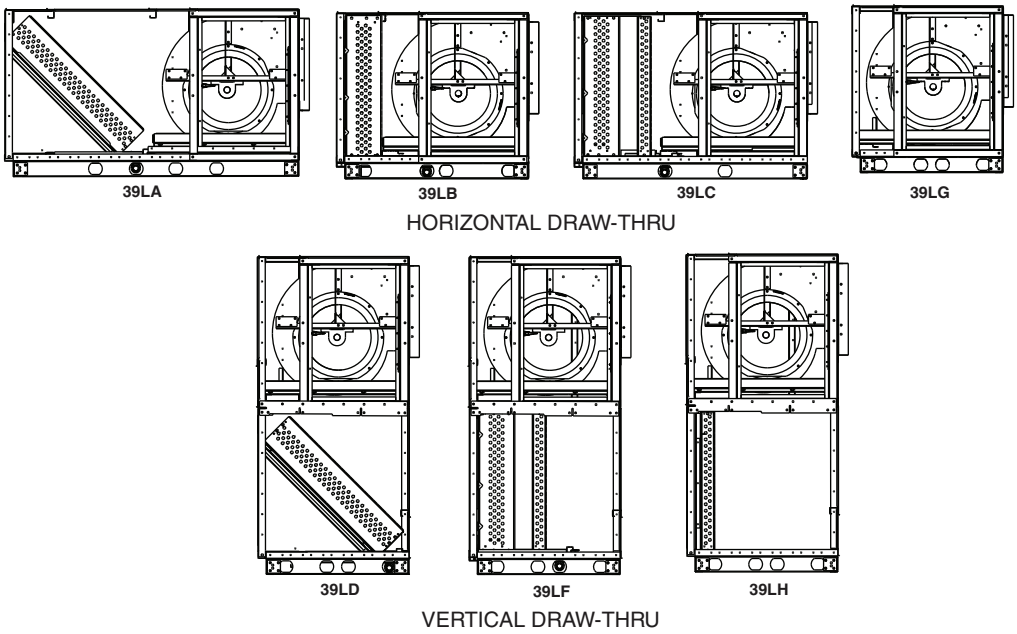

Fig. 1 — Unit Identification

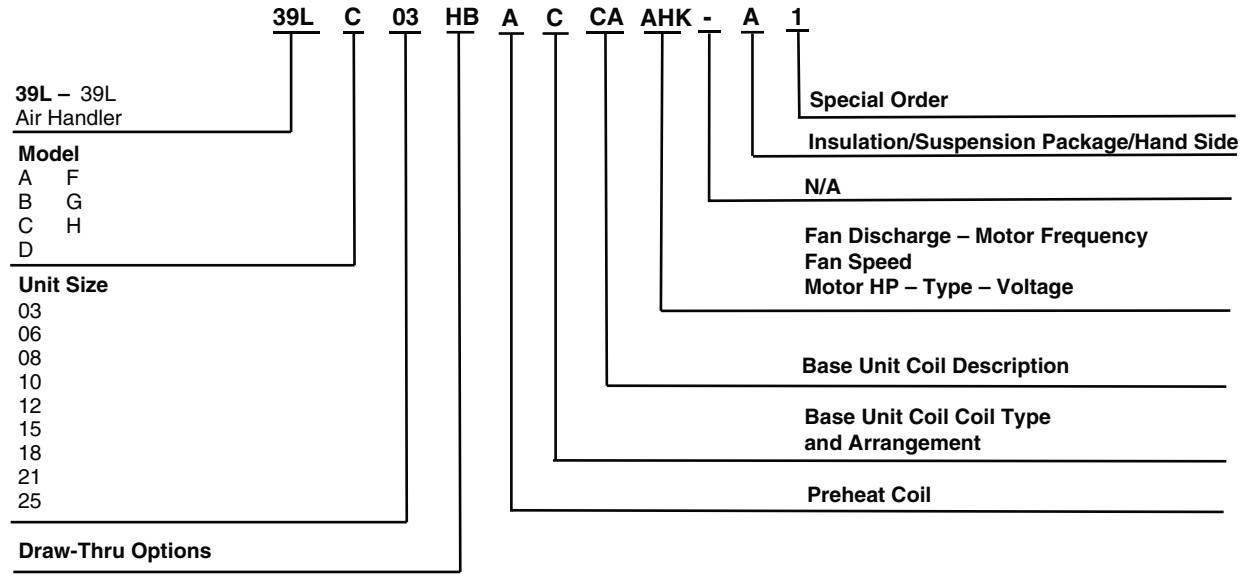

Fig. 2 — 39L Model Number Nomenclature

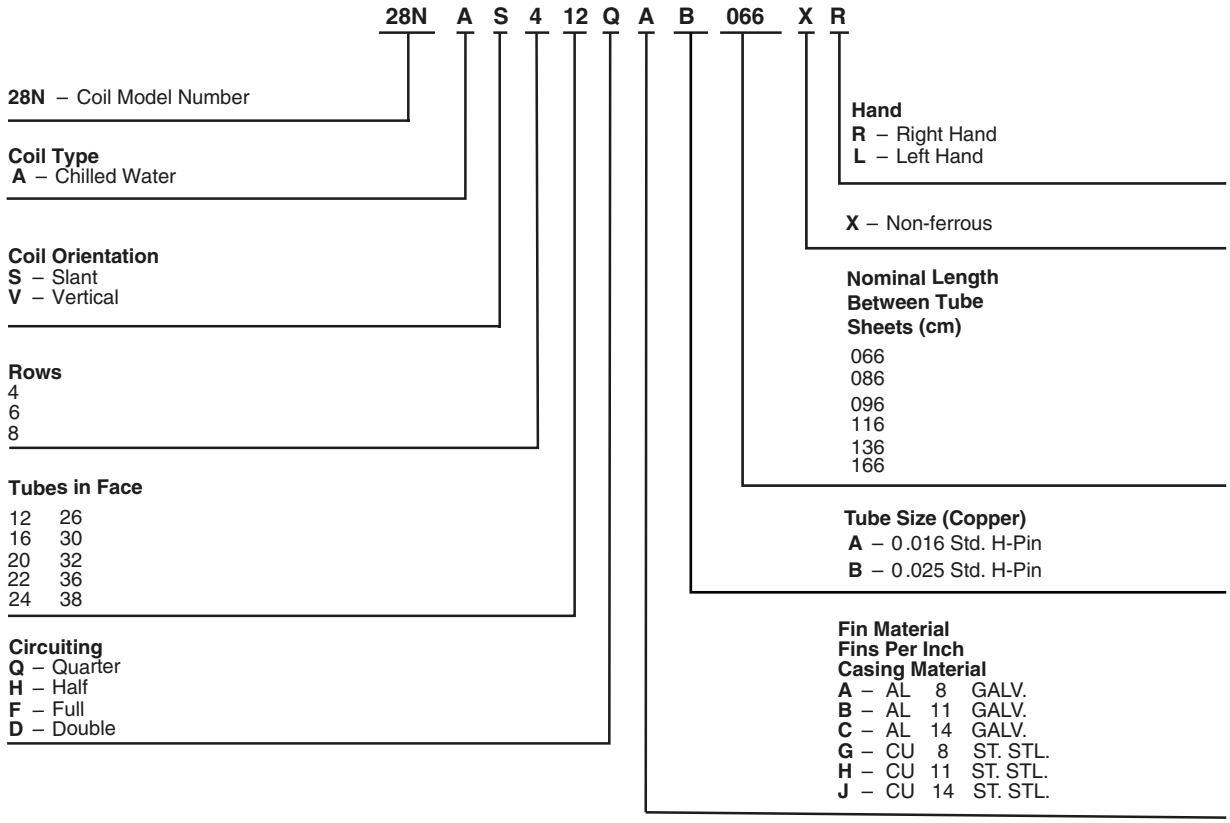

Fig. 3 — Chilled Water Coil Model Number Nomenclature

28N B V 1 16 H A A 086 X L

28N – Coil Model Number

Coil Type
B – Hot Water

Coil Orientation
V – Vertical

Rows
1
2

Tubes in Face
12 26
16 30
20 36

Circuiting
H – Half
F – Full

Hand
R – Right Hand
L – Left Hand

X – Non-ferrous

Nominal Length Between Tube Sheets (cm)
066
086
096
116
136
166

Tube Size (Copper)
A – 0.016 Std. H-Pin
B – 0.025 Std. H-Pin

Fin Material
Fins Per Inch
Casing Material
A – AL 8 GALV.
B – AL 11 GALV.
C – AL 14 GALV.
G – CU 8 ST. STL.
H – CU 11 ST. STL.
J – CU 14 ST. STL.

Fig. 4 — Hot Water Coil Model Number Nomenclature

28N E V 4 16 A A A 086 Z L

28N – Coil Model Number

Coil Type
E – Direct Expansion

Coil Orientation
S – Slant
V – Vertical

Rows
4
6
8

Tubes in Face
12 26
16 30
20 32
22 36
24 38

Circuiting
A – Face Split Quarter Circuit
B – Face Split Half Circuit
C – Face Split Full Circuit
D – Double Circuit
E – Row Split Quarter Circuit
F – Row Split Half Circuit
G – Row Split Full Circuit

Hand
R – Right Hand
L – Left Hand

Z – Standard (varies with coil)

Nominal Length Between Tube Sheets (cm)
066
086
096
116
136
166

Tube Size (Copper)
A – 0.016 Std. H-Pin
B – 0.025 Std. H-Pin

Fin Material
Fins Per Inch
Casing Material
A – AL 8 GALV.
B – AL 11 GALV.
C – AL 14 GALV.
G – CU 8 ST. STL.
H – CU 11 ST. STL.
J – CU 14 ST. STL.

Fig. 5 — Direct Expansion Coil Model Number Nomenclature

28L Z 2 1 06 F D 3 086 -- --

28L – Coil Model Number

Coil Type
Z – Steam Distributing Tube (1 in. OD)

Coil Position
2

Rows
1

Tubes in Face
04 10
06 12
08 14

Circuiting
F – Non-Freeze Full Circuit

[Blank]

[Blank]

Nominal Length Between Tube Sheets (cm)
066
086
096
116
136
166

Tube Size (Copper)
3 – 1 in. OD x 0.030 Wall

Fin Material
Fins Per Inch
Casing Material
C – AL 6 GALV.
D – AL 9 GALV.
E – AL 12 GALV.

Fig. 6 — Steam Distributing Tube Model Number Nomenclature

28L K 2 12 10 B A 1250 3

28L – Drive Package Model Number

Drive Type
V – Variable Speed
K – Constant Speed

Fan Type
1 – Forward Curve without VFD
2 – Forward Curve with VFD

Unit Size
Large Face Area (sq ft)
03 12 25
06 15
08 18
10 21

Motor Horsepower
01 – 1/2 hp
02 – 3/4 hp
03 – 1 hp
04 – 1-1/2 hp
05 – 2 hp
06 – 3 hp
07 – 5 hp
08 – 7-1/2 hp
09 – 10 hp
10 – 15 hp
11 – 20 hp
12 – 25 hp
13 – 30 hp

Safety Factor
3 – 1 Set Belt
1.5 Safety Factor

Fan Speed rpm
Position 12 is 0 if rpm is 3 digits

Motor Type
XL (Across-the-Line)
A – Open Drip Proof
B – Totally Enclosed, Non-Ventilated
C – Totally Enclosed, Fan-Cooled
D – Explosion Proof
E – Encapsulated (Open Drip Proof Frame)

PW (Part-Wind)
F – Open Drip Proof
G – Totally Enclosed, Non-Ventilated
H – Totally Enclosed, Fan-Cooled
J – Explosion Proof
K – Encapsulated (Open Drip Proof Frame)

Motor rpm
60 Hz
A – 1200
B – 1800
C – 3600
50 Hz
D – 1000
E – 1500
F – 3000

Fig. 7 — Drive Package Model Number Nomenclature

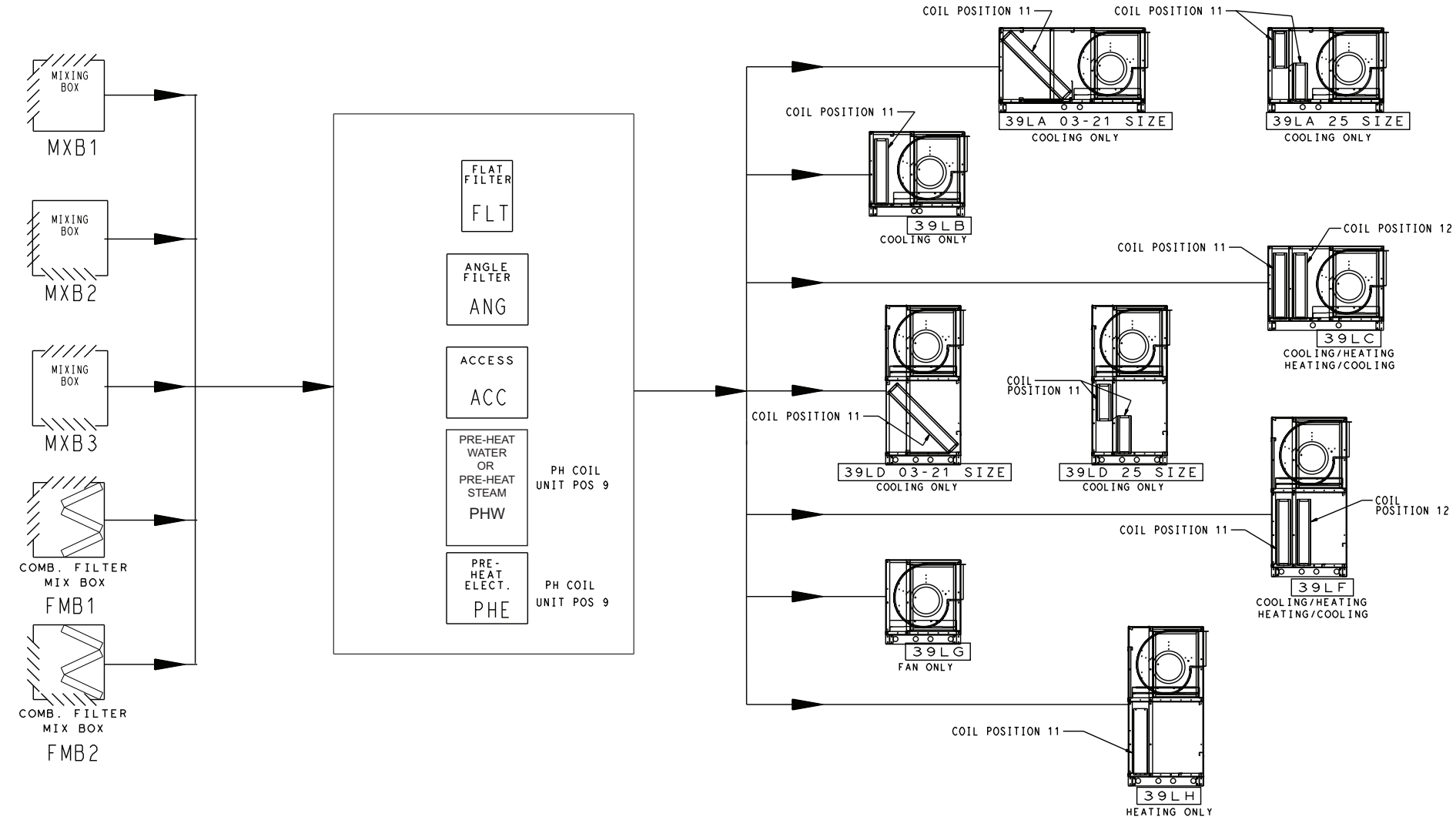

LEGEND

COMB. — Combination
PH — Preheat
POS. — Position
- - - - Factory-installed option components

Fig. 8 — Position 4, Unit Configuration Model (Component Sequence Also Shown)

PRIMARY COIL/FAN SECTIONS

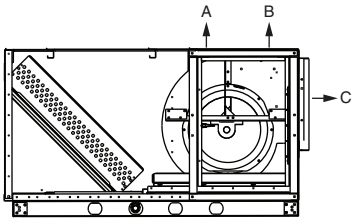

① **39LA** – HORIZONTAL COOLING LARGE FACE AREA

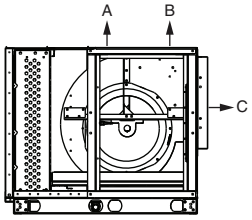

② **39LB** – HORIZONTAL COOLING SMALL FACE AREA

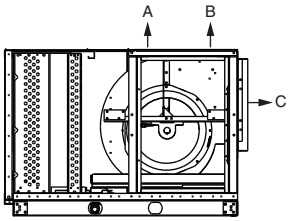

③ **39LC** – HORIZONTAL COOLING/HEATING SMALL FACE AREA

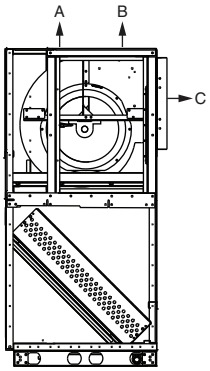

④ **39LD** – VERTICAL COOLING LARGE FACE AREA

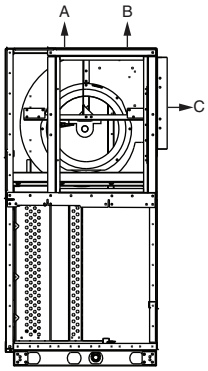

⑤ **39LF** – VERTICAL COOLING/HEATING SMALL FACE AREA

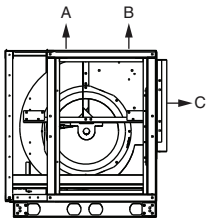

⑥ **39LG** – FAN ONLY

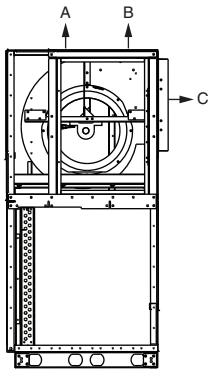

⑦ **39LH** – VERTICAL HEATING SMALL FACE AREA

ACCESSORY SECTIONS

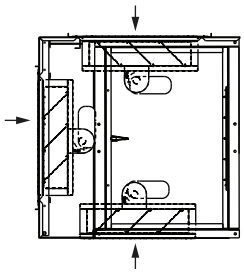

⑧ MIXING BOX

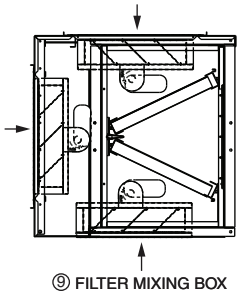

⑨ FILTER MIXING BOX

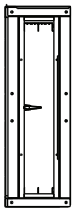

⑩ FLAT FILTER

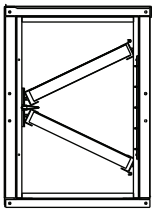

⑪ ANGLE FILTER

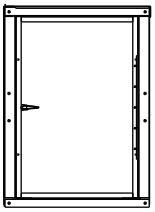

⑫ PLENUM

PREHEAT SECTIONS

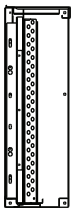

⑬ HOT WATER OR STEAM PREHEAT COIL

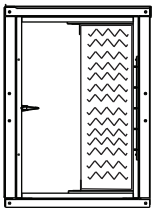

⑭ ELECTRIC PREHEAT COIL

Table 2 — Fan Configuration

Available Configurations	
A	Upblast Rear Discharge
B	Upblast Front Discharge
C	Top Horizontal Front Discharge
Fan Section Access	
Hinged Door on Hand Side	

NOTE: Item numbers refer to Table 2.

Fig. 9 — Section Details

See Table 3 to determine section dimensions and weights.

Table 3 — Section Dimensions and Weights

SECTION DIMENSIONS (in.) AND WEIGHTS (lb)										
Nominal cfm at 500 fpm		1,500	3,000	4,000	5,000	6,000	7,500	9,000	10,500	12,500
Unit Size		**03**	**06**	**08**	**10**	**12**	**15**	**18**	**21**	**25**
Height (in.) LA, LB, LC, LG		24.3	28.2	32.1	32.1	32.1	40.0	43.9	43.9	43.9
Height (in.) LD, LF, LH		45.5	53.3	61.3	61.3	61.3	76.9	84.8	84.8	100.6
Width (in.)		37.9	45.8	49.7	57.6	65.1	65.1	65.1	77.3	77.3
ITEM NO.[a]	**DESCRIPTION**	**AWL (in.)** Weight (lb)[b]								
1	**39LA**	**40.9**	**48.8**	**56.7**	**56.7**	**56.7**	**72.4**	**80.3**	**80.3**	**76.4**
		200	280	411	470	540	620	695	740	820
2	**39LB**	**29.1**	**33.1**	**37.0**	**37.0**	**37.0**	**44.9**	**48.8**	**48.8**	**56.7**
		150	210	308	352	405	465	521	555	615
3	**39LC**	**37.0**	**40.9**	**44.9**	**44.9**	**44.9**	**52.8**	**56.7**	**56.7**	**64.6**
		170	238	349	400	459	527	590	629	697
4	**39LD**	**21.3**	**25.2**	**29.1**	**29.1**	**29.1**	**37.0**	**40.9**	**40.9**	**48.8**
		230	322	472	540	621	713	799	851	943
5	**39LF**	**21.3**	**25.2**	**29.1**	**29.1**	**29.1**	**37.0**	**40.9**	**40.9**	**48.8**
		230	322	472	540	621	713	799	851	943
6	**39LG**	**21.3**	**25.2**	**29.1**	**29.1**	**29.1**	**37.0**	**40.9**	**40.9**	**48.8**
		120	168	246	282	324	372	417	444	492
7	**39LH**	**21.3**	**25.2**	**29.1**	**29.1**	**29.1**	**37.0**	**40.9**	**40.9**	**48.8**
		220	308	452	517	594	682	764	814	902
ACCESSORIES										
Unit Size		**03**	**06**	**08**	**10**	**12**	**15**	**18**	**21**	**25**
Height (in.)		24.3	28.2	32.1	32.1	32.1	40.0	43.9	43.9	43.9
Width (in.)		37.9	45.8	49.7	57.6	65.1	65.1	65.1	77.3	77.3
ITEM NO.[a]	**DESCRIPTION**	**AWL (in.)** Weight (lb)[b]								
8	**Mixing Box Section**	**27.6**	**27.6**	**27.6**	**27.6**	**27.6**	**27.6**	**35.4**	**35.4**	**35.4**
		139	164	193	219	226	244	283	272	311
9	**Filter Mixing Box**	**27.6**	**27.6**	**27.6**	**27.6**	**27.6**	**27.6**	**35.4**	**35.4**	**35.4**
		150	173	208	227	245	279	327	340	395
10	**Flat Filter Section**	**7.9**	**7.9**	**7.9**	**7.9**	**7.9**	**7.9**	**7.9**	**7.9**	**7.9**
		37	43	48	50	55	74	75	86	90
11	**Angle Filter Section**	**19.7**	**19.7**	**19.7**	**19.7**	**19.7**	**19.7**	**19.7**	**19.7**	**19.7**
		75	82	97	107	114	134	140	159	185
12	**Access Section**	**19.7**	**19.7**	**19.7**	**19.7**	**19.7**	**19.7**	**19.7**	**19.7**	**19.7**
		48	55	60	64	68	74	77	87	92
13	**Preheat (Hot Water or Steam) Section**	**7.9**	**7.9**	**7.9**	**7.9**	**7.9**	**7.9**	**7.9**	**7.9**	**7.9**
		36	42	43	46	49	52	54	53	57
14	**Preheat (Electric) Section**	**19.7**	**19.7**	**19.7**	**19.7**	**19.7**	**19.7**	**19.7**	**19.7**	**19.7**
		49	56	61	66	72	74	76	87	89

NOTE(S):

a. Item numbers refer to Fig. 9.
b. Unit weights do not include coils and motors.

LEGEND

AWL — Airway Length

PRE-INSTALLATION

1. Check items received against packing list. Notify Carrier of any discrepancy.
2. Refer to Fig. 10 for service area requirements.
3. To transfer unit from truck to storage site, refer to rigging details in Fig. 11 and section on unit rigging for proper handling. See Tables 2 and 3 for section and component weights.

⚠ CAUTION

If a fork lift truck is used, lift only from heavy end of skid. Minimum recommended fork length is 48 inches.

4. Do not stack unit components or accessories during storage. Stacking can cause damage or deformation. See Table 4 for additional component data.
5. If unit is to be stored for more than 2 weeks prior to installation, observe the following precautions:
   a. Choose a dry storage site that is reasonably level and sturdy to prevent undue stress or permanent damage to the unit structure or components. Do not store unit on vibrating surface. Damage to stationary bearings can occur. Set unit off ground if in heavy rain area.
   b. Remove all fasteners and other small parts from jobsite to minimize theft. Tag and store parts in a safe place until needed.
   c. Cover entire unit with a tarp or plastic coverall. Extend cover under unit if stored on ground. Secure cover with adequate tiedowns or store indoors. Be sure all coil connections have protective shipping caps.
   d. Monthly — Remove tarp from unit, enter fan section through access door or through fan inlet, and rotate fan and motor slowly by hand to redistribute the bearing grease and to prevent bearing corrosion.

Rigging

All 39L units can be rigged by means of the lifting brackets on bottom of unit.

Units are shipped fully assembled. Do not remove shipping skids or protective covering until unit is ready for final placement. Use slings and spreader bars as applicable to lift unit. *Do not lift unit by coil connections or headers.*

Do not remove protective caps from coil piping connections until ready to connect piping.

Do not remove protective cover or grease from fan shaft until ready to install sheave.

Lay rigid temporary protection such as plywood walkways in unit to prevent damage to insulation or bottom panel during installation.

Suspended Units

Figure 12 shows overhead suspension of unit using optional factory-supplied suspension channels.

Each support channel consists of 2 pieces, the smaller of which fits inside the larger one. This allows the channel to be adjusted to the required length for installation.

Channels are shipped on top of the unit. The 2 sections of each channel are shipped one inside the other, and are held in place during shipping by the panel screws in the top panel.

Hardware required for installation of suspension channels is shipped in a package inside the fan section.

At least 2 suspension channels are shipped with each fan and coil unit. One or more extra channels will be supplied depending on the number of accessories ordered. Be sure to install all the suspension channels shipped with a unit. Refer to 39L Isolator Mounting (Suspended Unit) certified drawing for details.

To install suspension channels:

1. Remove panel screws to free suspension channels for installation. Replace screws in top panel.
2. Adjust channel to required length by sliding one channel section inside the other. The channel must extend at least 9 in. but not more than 12 in. beyond the edge of the unit. Set length of channel by installing factory-supplied bolts through the overlapping channel sections.
3. Mount unit to suspension channel using factory-supplied nuts and bolts through 7/16 in. diameter holes in unit lifting bracket.
4. Install field-supplied suspension rods through 9/16 in. diameter holes provided at outer edges of channel. Be sure hanger rods are securely fastened in place.

Service Clearance

Provide adequate space for unit service access (fan shaft and coil removal, filter removal, motor access, damper linkage access, etc.) as shown in Fig. 10.

Condensate Drain

To prevent excessive build-up of condensate in drain pan, adequate trap clearance must be provided beneath the unit. See Install Condensate Drain section on page 20 for additional details.

External Vibration Isolators

Install vibration isolators per certified drawings, and in accordance with the job specifications and the instructions of the vibration isolator manufacturer. The coil piping must be isolated or have a flexible connection to avoid coil header damage because of unit motion. A flexible connection should be installed at the fan discharge.

Figures 12 and 13 show isolation location for overhead suspension or floor mounting of unit.

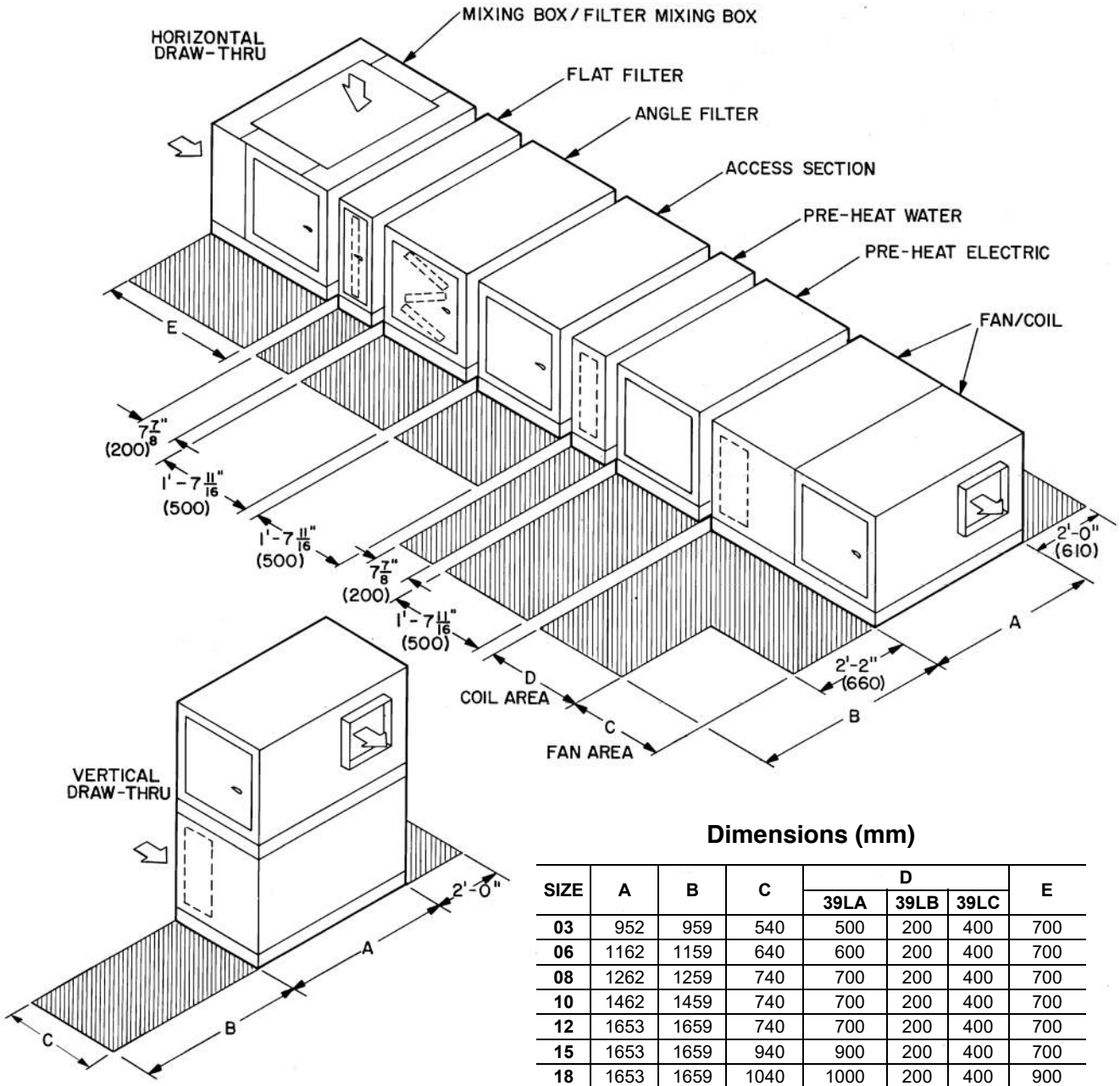

NOTE: Dimensions are in inches, ( ) are in mm.

Dimensions (mm)

SIZE	A	B	C	D			E
				39LA	39LB	39LC	
03	952	959	540	500	200	400	700
06	1162	1159	640	600	200	400	700
08	1262	1259	740	700	200	400	700
10	1462	1459	740	700	200	400	700
12	1653	1659	740	700	200	400	700
15	1653	1659	940	900	200	400	700
18	1653	1659	1040	1000	200	400	900
21	1962	1959	1040	1000	200	400	900
25	1962	1959	1240	700	200	400	900

Dimensions (ft-in.)

SIZE	A	B	C	D			E
				39LA	39LB	39LC	
03	3' 1-7/8"	3' 1-3/4"	1' 9-1/4"	1' 7-11/16"	7-7/8"	1' 3-3/4"	2' 3-9/16"
06	3' 9-3/4"	3' 9-5/8"	2' 1-3/16"	1' 11-5/8"	7-7/8"	1' 3-3/4"	2' 3-9/16"
08	4' 1-11/16"	4' 1-9/16"	2' 5-1/8"	2' 3-9/16"	7-7/8"	1' 3-3/4"	2' 3-9/16"
10	4' 9-9/16"	4' 9-7/16"	2' 5-1/8"	2' 3-9/16"	7-7/8"	1' 3-3/4"	2' 3-9/16"
12	5' 5-1/16"	5' 5-5/16"	2' 5-1/8"	2' 3-9/16"	7-7/8"	1' 3-3/4"	2' 3-9/16"
15	5' 5-1/16"	5' 5-5/16"	3' 1"	2' 11-9/16"	7-7/8"	1' 3-3/4"	2' 3-9/16"
18	5' 5-1/16"	5' 5-5/16"	3' 4-15/16"	3' 3-3/8"	7-7/8"	1' 3-3/4"	2' 11-7/16"
21	6' 5-1/4"	6' 5-1/8"	3' 4-15/16"	3' 3-3/8"	7-7/8"	1' 3-3/4"	2' 11-7/16"
25	6' 5-1/4"	6' 5-1/8"	4' 15/16"	2' 3-9/16"	7-7/8"	1' 3-3/4"	2' 11-7/16"

Fig. 10 — Service Area Requirements

Table 4 — Additional Component Data[a]

39L UNIT SIZE	03	06	08	10	12	15	18	21	25
TYPICAL DRY COIL WEIGHTS (lb)									
Large Face Area Cooling Coils, 1/2 in. OD (Chilled Water & DX)[b]									
4-Row	56	84	98	109	137	178	198	251	280
6-Row	63	95	123	138	174	234	270	327	363
Small Face Area Cooling Coils, 1/2 in. OD (Chilled Water & DX)[b]									
4-Row	45	72	91	105	133	161	182	211	238
6-Row	53	85	113	129	162	197	225	270	307
8-Row	61	92	129	143	189	228	263	324	377
Hot Water Coils, 1/2 in. OD[b]									
1-Row	19	34	38	48	58	62	77	86	95
2-Row	28	43	51	61	76	89	104	117	130
Steam Coils, 1-Row, 1-in. OD									
6-FPI	50	70	85	95	110	135	150	180	215
9-FPI	55	80	100	115	125	155	175	214	256
12-FPI	60	85	115	130	145	180	205	248	297
FAN									
Wheel Diameter (in.)	9-1/2	12-5/8	12-5/8	15	15	18-1/8	20	20	25
Wheel Width (in.)	7-1/8	9-1/2	11-1/8	11-1/8	15	15	13-1/2	18	15
Shaft Diameter (in.)	3/4	1-3/16	1-3/16	1-3/16	1-3/16	1-7/16	1-7/16	1-7/16	1-11/16
Maximum Fan rpm	2500	2000	2000	1600	1600	1400	1300	1100	1000
OPERATING CHARGE (Approximate), DIRECT EXPANSION COIL Refrigerant R-410A or R-22 (lb)									
4-Row Coil	1-2	2-3	3-4	4-5	4-5	5-6	6-7	6-8	6-9
6-Row Coil	1-2	2-4	5-6	5-6	6-8	8-10	9-11	11-13	11-16
8-Row Coil	2-3	3-5	5-6	5-7	7-9	10-12	12-14	13-19	16-24
COIL VOLUME (gal. water)									
Chilled Water, 1/2 in. OD Tube, Large Face Area									
4-Row	2.5	3.5	4.5	5.2	5.6	7.3	8.5	10.4	12.0
6-Row	3.2	4.7	6.0	6.8	7.7	10.1	11.7	14.2	16.3
Chilled Water, 1/2 in. OD Tube, Small Face Area									
4-Row	2.1	3.3	3.9	4.1	5.1	6.3	7.3	8.7	9.8
6-Row	2.4	3.7	5.1	5.9	6.6	8.3	9.5	11.8	13.5
8-Row	2.7	4.1	6.4	7.4	8.4	10.7	12.1	14.7	17.2
Hot Water, 1/2 in. OD Tube									
1-Row	0.5	0.8	1.0	1.3	1.5	1.8	2.1	2.5	2.9
2-Row	0.7	1.3	1.6	2.0	2.4	2.9	3.4	4.0	4.8
COOLING COILS									
Chilled Water 1/2 in. OD Tube, (4, 6 Row) Large Face Area									
Face Area (sq ft)	3.63	5.90	7.90	9.54	11.18	14.91	17.71	21.6	25.0
Number of Tubes/Face	16	20	24	24	24	32	38	38	44
Finned Tube Length (in.)	26.1	34.0	37.9	45.8	53.7	53.7	53.7	65.5	65.5
Chilled Water 1/2 in. OD Tube, (4, 6, 8 Row) Small Face Area									
Face Area (sq ft)	2.72	4.72	6.58	7.95	9.32	12.12	13.98	17.1	20.5
Number of Tubes/Face	12	16	20	20	20	26	30	30	36
Finned Tube Length (in.)	26.1	34.0	37.9	45.8	53.7	53.7	53.7	65.5	65.5
DX 1/2 in. OD Tube, (4, 6 Row) Large Face Area									
Face Area (sq ft)	3.63	5.90	7.90	9.54	11.18	14.91	17.71	21.6	25.0
Finned Tube Length (in.)	26.1	34.0	37.9	45.8	53.7	53.7	53.7	65.5	65.5
DX 1/2 in. OD Tube, (4, 6, 8 Row) Small Face Area									
Face Area (sq ft)	2.72	4.72	6.58	7.95	9.32	12.12	13.98	17.1	20.5
Finned Tube Length (in.)	26.1	34.0	37.9	45.8	53.7	53.7	53.7	65.5	65.5

Table 4 — Additional Component Data[a] (cont)

39L UNIT SIZE	03	06	08	10	12	15	18	21	25
HEATING COILS									
Hot Water 1/2 in. OD Tube, U-Bend (1, 2 Row)									
Face Area (sq ft)	2.72	4.72	6.58	7.95	9.32	12.12	13.98	17.1	20.5
Number Tubes/Face	12	16	20	20	20	26	30	30	36
Finned Tube Length (in.)	26.1	34.0	37.9	45.8	53.7	53.7	53.7	65.5	65.5
Steam 1-in. OD Tube, (1 Row)									
Face Area (sq ft)	2.13	4.18	6.22	7.53	8.85	11.06	13.28	16.2	18.9
Number Tubes/Face	4	6	8	8	8	10	12	12	14
Finned Tube Length (in.)	25.5	33.4	37.3	45.2	53.1	53.1	53.1	53.1	64.9

NOTE(S):

a. See Table for section weights and dimensions.
b. Coils have 14 aluminum fins per inch on copper tubes.

LEGEND

DX — Direct Expansion
FPI — Fins Per Inch

NOTE(S):
Lift in one piece. Use slings and spreader bars at each lifting bracket.

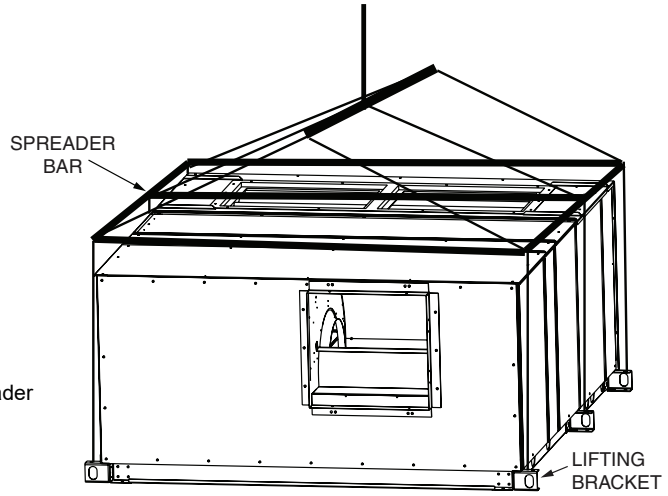

Fig. 11 — Unit Rigging Details

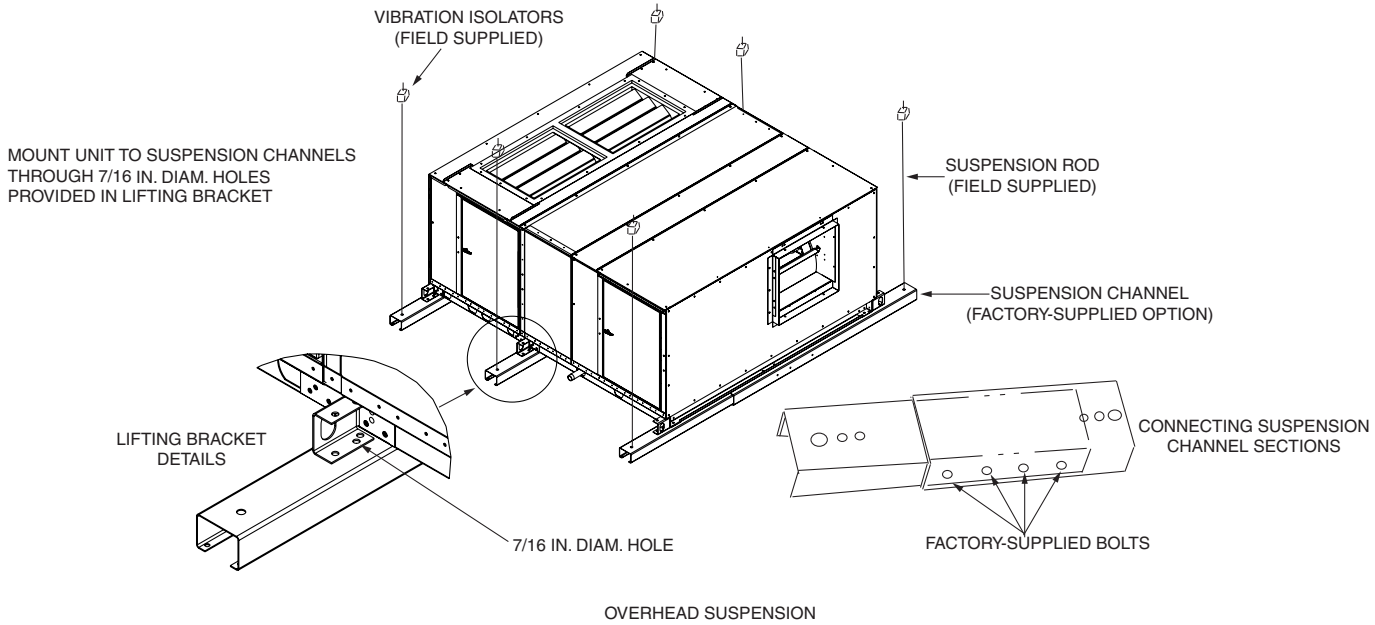

Fig. 12 — Unit Support Details, Overhead Suspension

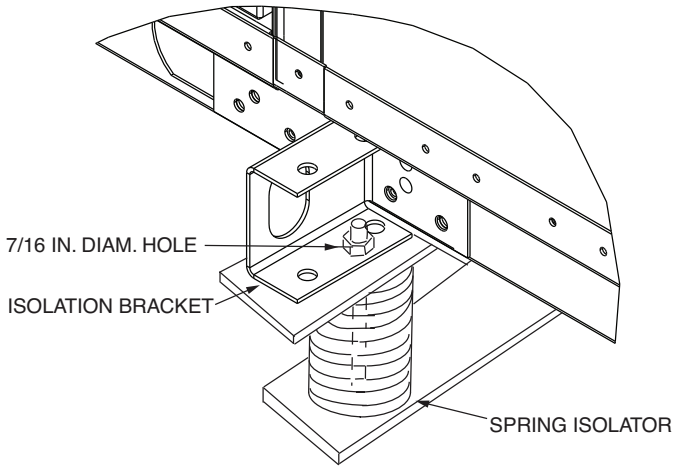

ISOLATION DETAIL – FLOOR MOUNT

Fig. 13 — Unit Support Details, Floor Mount

INSTALLATION

The following checks shall be made to installations using A2L refrigerants:

1. The actual charge is in accordance with the room size within which the refrigerant containing parts are installed.
2. Supplementary ventilation machinery and outlets are operating adequately and are not obstructed.
3. For appliances utilizing indirect refrigeration, the secondary circuit shall be checked for the presence of refrigerant.
4. Warning markings on the equipment is visible and legible, with those that are not being either replaced or corrected.
5. Refrigerant piping or components are installed in a position where they are unlikely to be exposed to any substance which may corrode them, unless the components are constructed of materials which are inherently resistant to being corroded or are suitably protected against said corrosion.
6. Validate that the A2L leak dissipation function is operational by using the test function on the A2L dissipation board.

Base Rail Split

A base rail split between the primary coil/fan section and the accessory sections is optional. If this option has been selected, the 39L unit will arrive at the job site assembled as one piece. The split allows the unit to be separated at the joint.

If the unit must be separated in the field, follow this procedure:

1. Remove the lifting lugs on the inlet side of the coil/fan section and those on the outlet side of the accessory section to liberate the T-bracket. See Fig 14.
2. Unscrew the flanges (top and sides) around the coil/fan section and the accessory section. See Fig. 15.

⚠ CAUTION

Ensure that a good seal is created between both sections before continuing. A poor seal may result in equipment damage.

NOTE: If the section-to-section gasket installed at the factory is damaged while splitting the unit, obtain the required length of 1/8 in. x 1-1/4 in. foam gasketing locally.

After rejoining the split sections, fully tighten all AB 1/4-3/4 in. screws on the flanges and the AB 1/4-5/8 in. screws on the flanges. See Fig. 16.

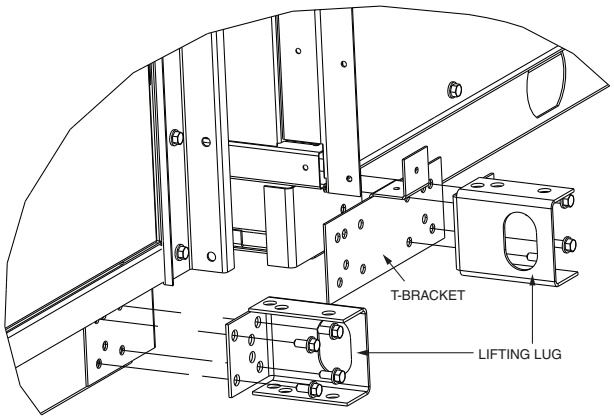

Fig. 14 — Base Rail Split — T-Bracket

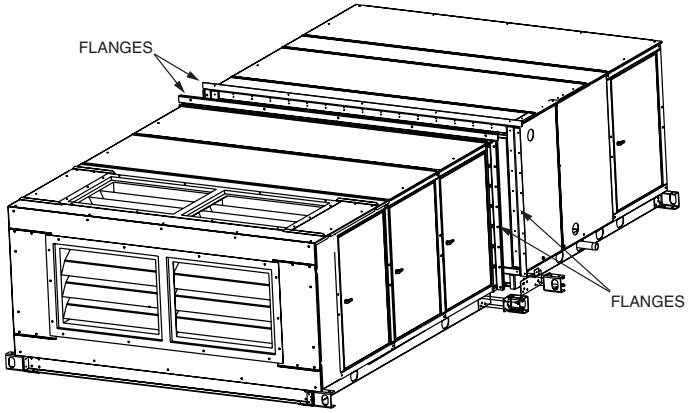

Fig. 15 — Base Rail Split — Flanges

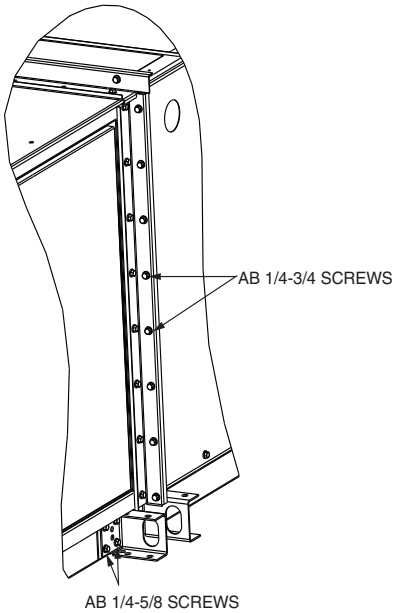

Fig. 16 — Base Rail Split — Screws

Mixing Box

DAMPER ACTUATORS

The 39L mixing boxes are supplied with low leak dampers and blade and edge seals. Damper operating torques are shown in Table 5.

The actuator and mounting brackets are field supplied and may be mounted inside or outside the unit. A typical inside mounting bracket is shown in Fig. 17. For external mounting of actuators, drill or punch a hole in the exterior panel. Refer to Fig. 18.

NOTE: If the unit is shipped with *Air*Manager™ controls, actuator(s) are factory-supplied. Refer to Table 6.

To ensure torque is transmitted equally to both damper sections, actuator must be connected to the 1-in. hollow jackshaft that drives the interconnecting linkage bar. Connection to any other shaft is not recommended.

DUCTWORK ATTACHMENT

Ductwork should be flanged out and attached to the mixing box panels as shown in Fig. 17. See Fig. 19 for duct connection sizes.

Table 5 — Mixing Box Damper Operating Torque (in.-lb)

39L UNIT SIZE	TORQUE
03	20
06	20
08	26
10	29
12	33
15	41
18	52
21	56
25	76

NOTE(S):
1. Torque values are based on interconnected dampers driven by one operator. For units with separate operators for each damper, calculate torque as follows: Table values x .80 = torque per damper section.
2. Damper shaft moves 90 degrees from open to closed position.

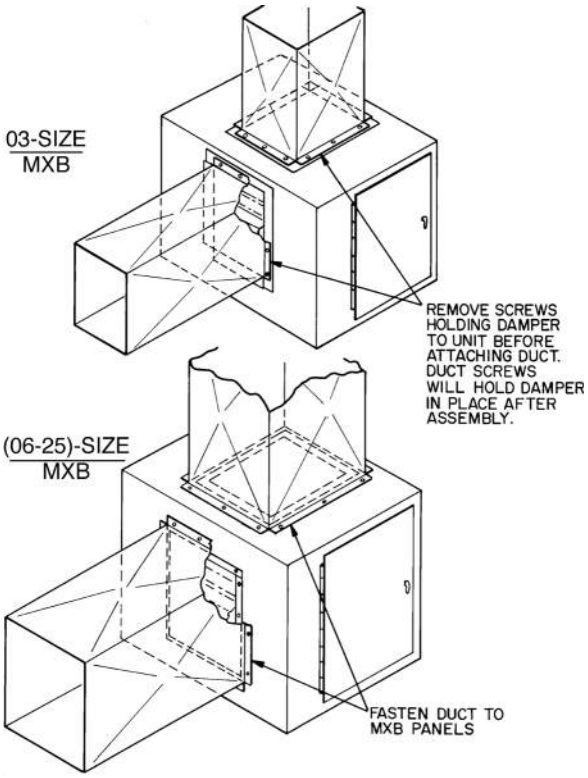

LEGEND
MXB — Mixing Box

Fig. 17 — Mixing Box Ductwork Attachment

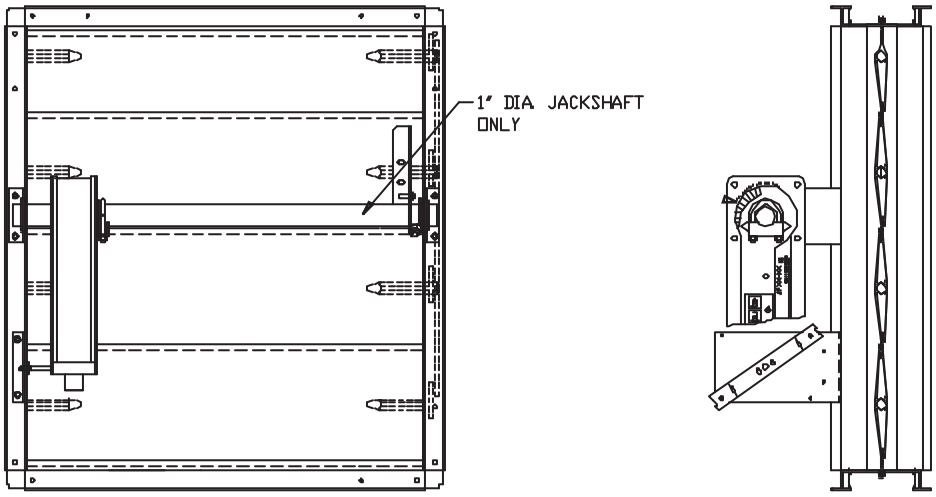

Fig. 18 — Typical Mixing Box Actuator Mounting

Table 6 — Recommended Actuators[a,b,c,d,e]

ACCESSORY PACKAGE NO.	ACTUATOR PART NO.	VOLTAGE (50/60 Hz)	VA	ROUND SHAFT SIZE MIN-MAX (in.)	TIMING (sec)	DAMPER AREA (sq ft)		TORQUE (in.-lb)	MAXIMUM STROKE (degrees)	MAXIMUM WIRE LENGTH (ft)
						Parallel	Opposed			
33AMACTDMP133	HF27BJ035[f]	24	10	0.750-1.050	150	44	53	133	90	300
33AMACTGV-133	HF27BJ033	24	4	0.375-0.625	< 150	N/A	N/A	133	90	725
33AMACTGV-266	HF27BJ034	24	6	0.475-0.750	135	N/A	N/A	266	90	450

NOTE(S):

a. All actuators are direct coupled type, designed to be directly mounted into jackshaft assembly.
b. All actuators are equipped with a plenum rated cable, factory-terminated to the actuator. Part No. HF27BB035 and 034 are 16 ft, HF27BB033 is 9.5 ft.
c. Damper areas are nominal and based on low leakage type dampers.
d. For larger damper assemblies, multiple activators may be used.
e. Part No. HF27BB033 and 034 are designed for inlet guide vane and face and bypass applications, but may be used for external relief dampers if spring return is not required.
f. Actuator is spring-return type.

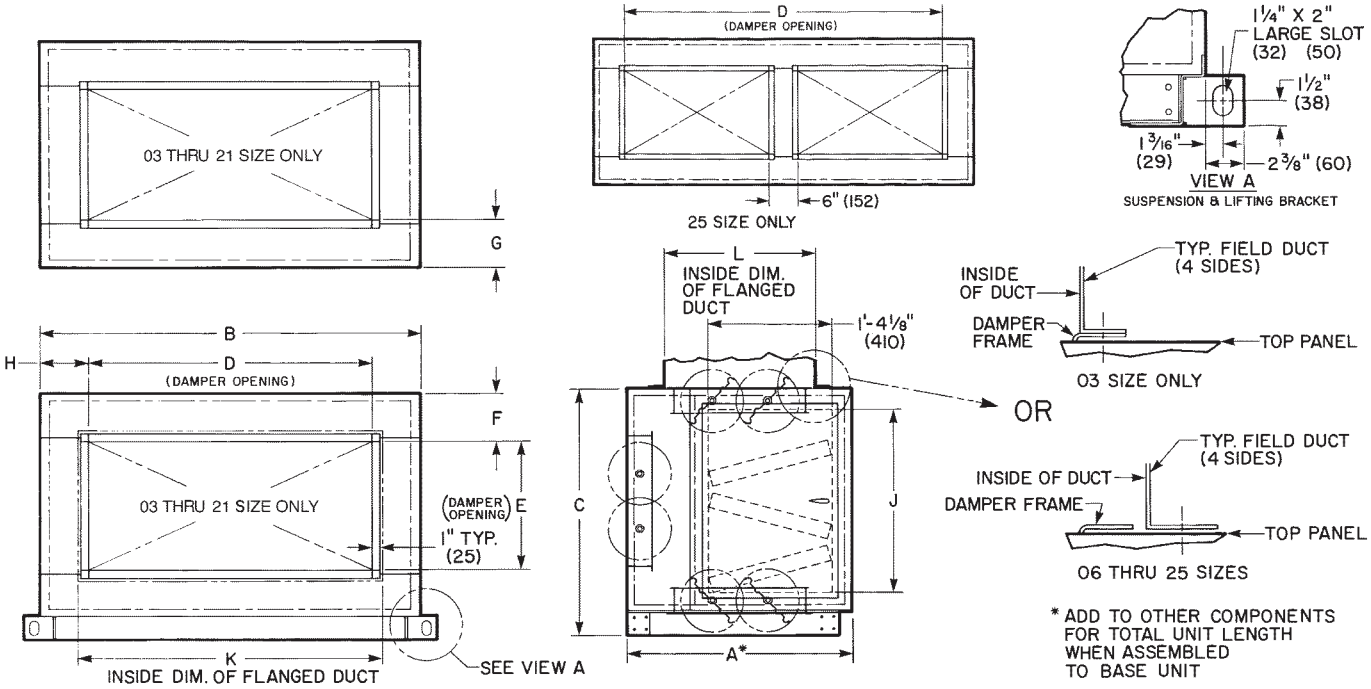

NOTE(S):
1. Hand is determined by the location of the fan drive and/or coil connection when viewed while facing the direction toward which air is flowing.
2. Dimensions are in inches, ( ) are in millimeters.

DIMENSIONS (ft-in.)

UNIT 39L-	A	B	C	D	E	F	G	H	J	K	L
03	2' 3-9/16"	3' 1-7/8"	2' 1/4"	1' 5"	1' 5"	1-5/8"	6-1/16"	10-1/2"	1' 4-3/4"	1' 5-1/4"	1' 5-1/4"
06	2' 3-9/16"	3' 9-3/4"	2' 4-3/16"	1' 11"	1' 5"	4-1/8"	6-1/16"	11-3/8"	1' 8-11/16"	2' 1-1/4"	1' 7-1/4"
08	2' 3-9/16"	4' 1-11/16"	2' 8-1/8"	3' 1"	1' 5"	6-1/16"	6-1/16"	6-3/8"	2' 5/8"	3' 3-1/4"	1' 7-1/4"
10	2' 3-9/16"	4' 9-9/16"	2' 8-1/8"	3' 5"	1' 5"	6-1/16"	6-1/16"	8-5/16"	2' 5/8"	3' 7-1/4"	1' 7-1/4"
12	2' 3-9/16"	5' 5-7/16"	2' 8-1/8"	3' 11"	1' 5"	6-1/16"	6-1/16"	9-1/4"	2' 5/8"	4' 1-1/4"	1' 7-1/4"
15	2' 3-9/16"	5' 5-7/16"	3' 4"	3' 11"	1' 9"	8"	4-1/16"	9-1/4"	2' 8-1/2"	4' 1-1/4"	1' 11-1/4"
18	2' 11-7/16"	5' 5-7/16"	3' 7-15/16"	3' 11"	2' 3"	7"	5"	9-1/4"	3' 7/16"	4' 1-1/4"	2' 5-1/4"
21	2' 11-7/16"	6' 5-1/4"	3' 7-15/16"	3' 11"	2' 5"	6"	4"	1' 3-1/8"	3' 7/16"	4' 1-1/4"	2' 7-1/4"
25	2' 11-7/16"	6' 5-1/4"	4' 3-13/16"	5' 4"	2' 5"	9-7/8"	4"	6-5/8"	3' 8-5/16"	5' 6-1/4"	2' 7-1/4"

Fig. 19 — Mixing Box Duct Connections

Install Condensate Drain

Install a trapped condensate drain line at unit drain connection. Use 1-in. standard pipe.

Measure maximum design negative static pressure upstream from the fan. Referring to Fig. 20, height "H" must be equal to or larger than negative static pressure at design operating conditions. Prime enough water in trap to prevent losing seal (Differential 1). When the fan starts, Differential 2 is equal to the maximum negative static pressure.

Provide freeze-up protection and insulation as required.

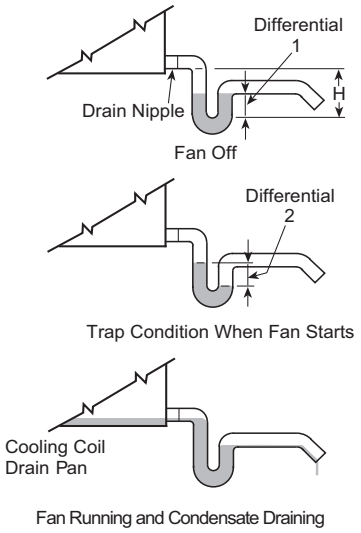

Fig. 20 — Condensate Drain

Variable Frequency Drive (VFD)

Variable frequency drives (VFDs) are used to modulate fan motor speed in response to air volume requirements. To vary the motor speed, a VFD changes the input frequency and line voltage into a wide range of frequency and voltage outputs, while maintaining a constant ratio of frequency to voltage. See Table 16 for motor and drive package data.

Since 2001, all 1-hp and greater motors supplied by Carrier for the 39L series air handling units are designed and constructed for use with variable frequency drives. If a field-supplied motor is installed, ensure the motor is suitable for use with a VFD.

If the lead length from the VFD to the motor is greater than 25 ft, Shaft Grounding Rings (SGR) are necessary to help dissipate induced shaft voltages to ground and prevent motor bearing damage.

Install Fan Motor

For field installation of motors, be sure electrical junction box is toward the center of the unit. This is necessary for drive and belts to be properly tightened. Use smallest slots in motor mounting base that will accommodate motor and allow minimum overhang (see "Install Sheaves on Motor and Fan Shafts" on page 40). Be sure that motor holddown bolts are tight on field-installed motor. See Table 7 for electrical data for premium efficiency EISA compliant motors.

JUNCTION BOX CONDENSATE PREVENTION

When air handlers are installed outdoors in a high humidity environment or indoors where the apparatus room is used as a fresh air plenum, precautions must be taken to prevent condensation from forming inside the junction box of the internally mounted motor.

Standard installation practice is to mount the motor starter or fused disconnect box adjacent to the air handler and enclose the power wiring to the motor in flexible conduit.

The sheet metal housing of the disconnect switch or motor starter is not airtight (even when a box meeting NEMA [National Electrical Manufacturers Association] IV standards is used). Thus, warm moist air can migrate through the flexible conduit to the junction box on the motor. With the motor located inside the unit, the motor temperature is that of the cool supply air; thus, condensate can form inside the junction box and, possibly, on the live terminal lugs.

To prevent the moist air from migrating through the conduit to the motor, seal the power wires inside the flexible conduit at the motor starter or fused disconnect.

Use a non-conductive, non-hardening sealant. Permagum (manufactured by Schnee Morehead) or sealing compound, thumb grade (manufactured by Calgon), are acceptable materials.

POWER KNOCKOUTS

Panels are not provided with knockouts for the fan motor power wiring. Openings must be drilled or punched in the exterior panels of the unit. It is recommended that power wiring be routed through the discharge panel whenever possible, as this panel is rarely removed for service access.

Table 7 — Electrical Data — Premium Efficiency EISA Compliant Motors

ODP/OPSB T-FRAME MOTORS - 1800 RPM						
Motor HP	FLA For 3-phase, 60 Hz Voltages				EFF. (%)	NEMA FRAME
	208	230	460	575		
1.0	3.1	2.8	1.4	1.1	85.5	143T
1.5	4.6	4.2	2.1	1.7	86.5	145T
2.0	6.1	5.6	2.8	2.2	86.5	145T
3.0	8.6	7.8	3.9	3.1	89.5	182T
5.0	14.3	13.0	6.5	5.2	89.5	184T
7.5	20.8	18.8	9.4	7.5	91.0	213T
10.0	27.3	24.7	12.4	9.9	91.7	215T
15.0	39.8	36.0	18.0	14.4	93.0	254T
20.0	53.1	48.0	24.0	19.2	93.0	256T
25.0	65.5	59.3	29.6	23.7	93.6	284T
30.0	77.8	70.4	35.2	28.2	94.1	286T
40.0	103.8	93.8	46.9	37.5	94.1	324T
50.0	128.6	116.3	58.2	46.5	94.5	326T
60.0	152.7	138.1	69.1	55.2	95.0	364T
75.0	190.9	172.6	86.3	69.1	95.0	365T
100.0	252.4	228.3	114.1	91.3	95.4	404T
125.0	—	—	142.7	114.1	95.4	405T
150.0	—	—	169.8	135.8	95.8	444T

TEFC T-FRAME MOTORS - 1800 RPM						
Motor HP	FLA For 3-phase, 60 Hz Voltages				EFF. (%)	NEMA FRAME
	208	230	460	575		
1.0	3.1	2.8	1.4	1.1	85.5	143T
1.5	4.6	4.2	2.1	1.7	86.5	145T
2.0	6.1	5.6	2.8	2.2	86.5	145T
3.0	8.6	7.8	3.9	3.1	89.5	182T
5.0	14.3	13.0	6.5	5.2	89.5	184T
7.5	20.5	18.5	9.3	7.4	91.7	213T
10.0	27.3	24.7	12.4	9.9	91.7	215T
15.0	40.4	36.5	18.2	14.6	92.4	254T
20.0	53.1	48.0	24.0	19.2	93.0	256T
25.0	65.5	59.3	29.6	23.7	93.6	284T
30.0	78.7	71.1	35.6	28.5	93.6	286T
40.0	103.8	93.8	46.9	37.5	94.1	324T
50.0	128.6	116.3	58.2	46.5	94.5	326T
60.0	152.7	138.1	69.1	55.2	95.0	364T
75.0	189.3	171.2	85.6	68.5	95.4	365T
100.0	252.4	228.3	114.1	91.3	95.4	405T
125.0	—	—	142.7	114.1	95.4	444T
150.0	—	—	169.8	135.8	95.8	445T

LEGEND

EFF — Efficiency
EISA — Energy Independence and Security Act of 2007
FLA — Full Load Amps
NEMA — National Electrical Manufacturers Association
ODP — Open Drip Proof
OPSB — Open Slotted Band
TEFC — Totally Enclosed Fan Cooled

NOTE(S):
1. Approximate motor full load amps listed. Actual motor full load amps can be found on the motor nameplate.
2. Motor voltage and availability is controlled by ***AHU*Builder®** program.

Motor Nameplate Data

The 39 Series air-handling unit nameplates do not contain fan motor electrical data. The units as manufactured, are certified to meet all requirements, including unit markings, of UL1995 "Standard For Safety-Heating and Cooling Equipment."

The motor nameplate should be relied on to carry the motor electrical data. Here are several reasons the motor data is not on an external nameplate, separate from the motor:

1. Many units are shipped without motors, and the installing contractor provides field-supplied motors.
2. Typically, the motors provided are triple voltage motors and may be wired at the job site for 208, 230, or 460-volt power, as necessary.
3. The motor nameplate, which contains all necessary electrical information, is easily accessible inside the fan section.
4. Motor changes are quite often required during testing and balancing to meet actual job conditions. External nameplates could easily be left unchanged by the installing contractor.

NOTE: Where field wiring of motor is required, wire per instructions located in motor terminal box or on motor nameplate. See Fig. 21.

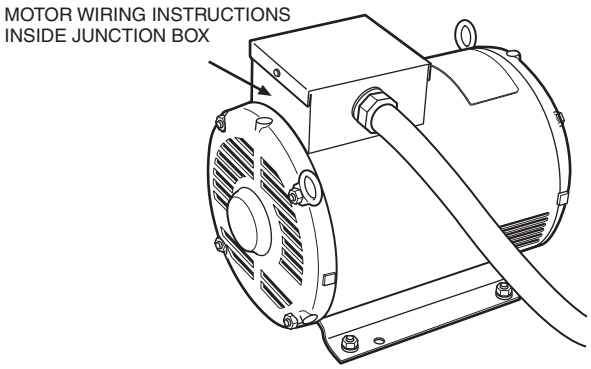

WIRE	VOLTS
~~2 Y~~	~~LOW START~~
2 Δ	LOW RUN
~~1 Y~~	~~HIGH START~~
1 Δ	HIGH RUN

OR

VOLTAGE	CONNECTION
LOW	~~WYE~~
	DELTA
HIGH	~~WYE~~
	DELTA

NOTE(S):
1. If the motor has 12 leads and wiring diagrams for both Wye and Delta OR Start and Run connections, ALWAYS wire to the RUN or DELTA connections with an across-the-line motor starter or VFD. Failure to do so will result in motor and/or starter/VFD damage.
2. Low-voltage motors include 190, 200, 208, and 230-v.
3. High-voltage motors include 380, 400, 460, and 480-v.

Fig. 21 — Field Wiring Instructions for Motor with 12 Leads

Fan Motor Starter

When starter is factory-installed, it is wired to the motor and fully tested before shipping. Before proceeding, open the starter cover and fan section access door to check for any damage.

WIRING

1. Select a suitable location for the field power supply source; top is preferred.
2. Before drilling any hole, be sure the hole and any field-supplied conduit fittings will not interfere with the door or components inside the enclosure.
3. Drill the appropriate size hole and connect the field-supplied conduit to the enclosure.
4. Refer to the wiring diagram supplied with the starter and connect the line voltage power source to the line voltage terminals (L1, L2, L3) as shown.
5. Refer to the factory-supplied voltage warning label and verify that the power source is correct.
6. Connect the grounding wire to the grounding lug provided on the bottom of the starter.

NOTE: For remote control operation (AUTO position), fire/smoke shutdown, or shutdown on coil freeze protection, a second conduit should be used to connect these control functions.

> IMPORTANT: This starter is designed to stop the equipment in both HAND and AUTO positions if either a fire/smoke or coil freeze condition is detected.

1. Select a location at the bottom of the starter near the control terminal block.
2. Before drilling any hole, be sure the hole and any field-supplied conduit fittings will not interfere with the door or components inside the enclosure.
3. Drill the appropriate size hole and connect the fieldsupplied conduit to the enclosure.
4. If a smoke detector or remote fire shut down is provided (field-supplied), remove the factory-supplied jumper between terminals 1 and 2 in the starter. Connect the normally closed, isolated dry contact from the smoke detector or fire system to these terminals.
5. If a coil freeze detection thermostat is provided, remove the factory-supplied jumper between terminals 1 and 2 in the starter. Connect the normally closed contact from the low temperature thermostat to these terminals.
6. For remote start/stop operation (when the HOA [hand/auto/off] switch is placed in the AUTO position), connect a field-supplied, normally open isolated dry contact between terminals 3 and 4. This contact must be suitable for at least 3 amps at 120 vac.

START-UP AND TEST

Before applying power to the starter, verify that the motor overload inside the starter is set to the full load amperage (FLA or RLA) specified on the motor nameplate.

> IMPORTANT: Many starters contain a multi-tap control transformer. The line voltage tap on the control transformer must be set in the field. For starters operating at 200/230-50 Hz, 208/230-60 Hz, or 380/400/415-50 Hz, the line voltage tap on the control transformer must be set to the appropriate line input voltage.

1. Set the HOA switch on the front of the starter to the OFF position.
2. Verify that the fan can freely rotate and remove any loose items inside the fan section.
3. Close and secure the fan access door or panel and the starter door cover.
4. Apply power to the starter.
5. Set the HOA switch in the HAND position and verify that the fan operates.
6. For 3-phase motors:

   Place the switch back in the OFF position and carefully open the fan access door.
7. Verify that the fan wheel is rotating in the proper direction. If it is not, remove power and reverse any two of the line voltage connections at the starter terminals (L1, L2, L3).
8. With the fan operating and the starter in the HAND position, verify that each safety or limit switch functions properly.
9. Repeat Step 6 with the switch in the AUTO position and the remote contact energized.

Disconnect

When disconnect is factory-installed, it is wired to the motor, and fully tested before shipped. Open the disconnect cover and fan section access door to check for damage before proceeding.

DISCONNECT WIRING

1. Connect the field line voltage power source to the top of the disconnect (knockouts are provided).
2. Remove the knockouts as required to accommodate the field-supplied conduit.
3. Refer to the wiring diagram supplied with the unit and connect the line voltage power source to the line voltage terminals (L1, L2, L3) as shown.
4. Refer to the factory-supplied voltage warning label and verify that the power source is correct.
5. Connect the ground wire to the grounding lug provided in the disconnect.

START-UP AND TEST

1. Set the disconnect switch to the OFF position.
2. Verify that the fan can freely rotate and remove any loose items inside the fan section.
3. Close and secure the fan access door and the disconnect door cover.
4. Apply power.
5. Set the disconnect switch to the ON position and verify that the fan operates.
6. For 3-phase motors:

   Place the switch back in the OFF position and carefully open the fan access door.
7. Verify that the fan wheel is rotating in the proper direction. If it is not, remove power and reverse any two of the line voltage connections at the starter terminals (L1, L2, L3).

NOTE: For fused type disconnects, blown fuses MUST be replaced with the same type and size originally supplied.

VFD

When the variable frequency drive (VFD) is factory-installed, it is wired to the motor and fully tested before shipment. Drive programming is also done at the factory, including electronic overload, which is programmed for the motor FLA. Refer to Tables 8 and 9.

Open the VFD front cover and the fan section access door to check for any damage before proceeding.

FIELD-WIRING ACH580

1. Select a suitable location in the bottom of the VFD to connect field-supplied power source.
2. Remove the appropriate size knockout using a suitable knockout punch tool. Do NOT use a drill; metal shavings will damage the drive.
3. Connect the field-supplied conduit to the VFD enclosure.
4. Refer to the wiring diagram supplied with the VFD connect the line voltage power source to the line voltage terminals (L1, L2, L3) as shown.
5. Refer to the factory-supplied voltage warning label and verify that the power source is correct.
6. Connect the ground wire to the grounding lug provided on the bottom of the VFD.
7. Select another suitable location on the bottom of the VFD to connect the field-supplied control wiring.
8. Locate and use one of the unused knockouts on the VFD housing and connect the control wiring conduit. Refer to Fig. 22 and 23 for field control wiring connections.

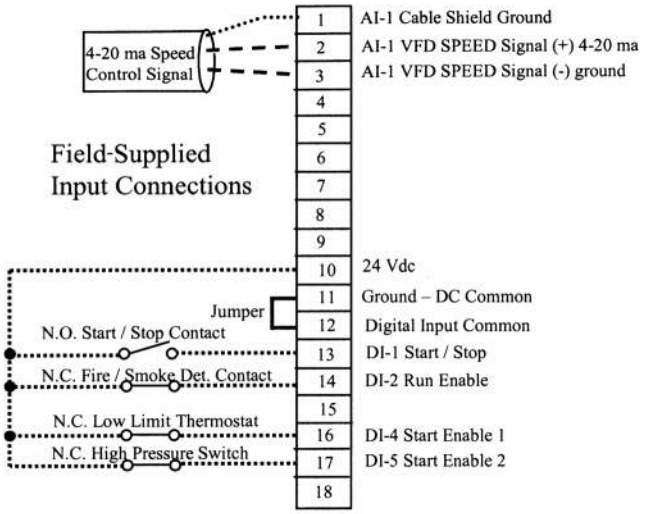

NOTES:
1. All conductors are no. 22 AWG (American Wire Gage) minimum.
2. Install jumpers if fire/smoke detector, low limit thermostat, or high pressure switch are not required.

Fig. 22 — Field-Supplied Control Wiring for VFD Speed Control (ACH580)

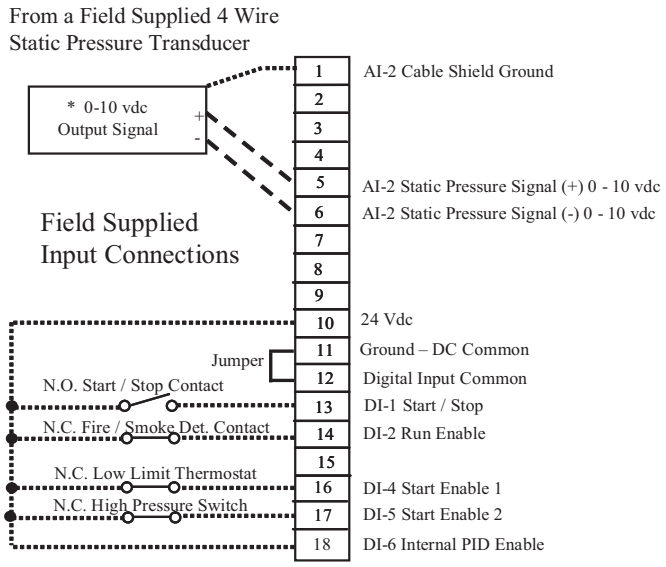

*Acceptable transducer output voltage ranges are 0-10 vdc, 0-5 vdc, and 2-10 vdc. Default sensor range is 0-10 vdc from factory. Use parameters 12.29 to configure sensor low voltage and parameter 12.30 to configure sensor high voltage.

NOTES:
1. All conductors are no. 22 AWG (American Wire Gage) minimum.
2. Install jumpers if fire/smoke detector, low limit thermostat, or high pressure switch are not required.
3. Program static pressure control set point using parameter 40.21 in volts vdc.

Fig. 23 — Field Wiring for Stand-Alone Static Pressure Control with 4-Wire Static Pressure Transducer (Voltage Output) (ACH580)

FIELD-WIRING ACH180

1. Select a suitable location in the bottom of the VFD to connect field-supplied power source.
2. Remove the appropriate size knockout on the conduit panel using a suitable knockout punch tool. Do NOT use a drill; metal shavings will damage the drive.
3. Connect the field-supplied conduit to the VFD conduit panel.
4. Refer to the wiring diagram supplied with the VFD connect the line voltage power source to the line voltage terminals (L1, L2, L3) as shown.
5. Refer to the factory-supplied voltage warning label and verify that the power source is correct.
6. Connect the ground wire to the grounding lug provided on the bottom of the VFD.
7. Select another suitable location on the bottom of the VFD to connect the field-supplied control wiring.
8. Locate and use one of the unused knockouts on the VFD conduit panel and connect the control wiring conduit. Refer to Fig. 24 and 25 for field control wiring connections.

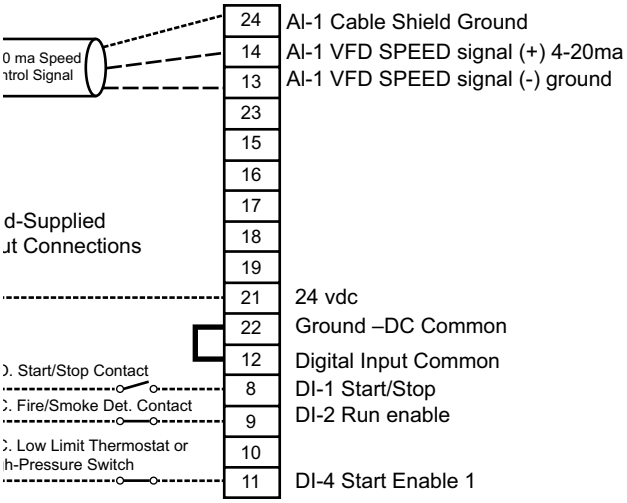

NOTES:
1. All conductors are no. 22 AWG (American Wire Gage) minimum.
2. Install jumpers if fire/smoke detector, low limit thermostat, or high pressure switch are not required.

Fig. 24 — Field-Supplied Control Wiring for VFD Speed Control (ACH180)

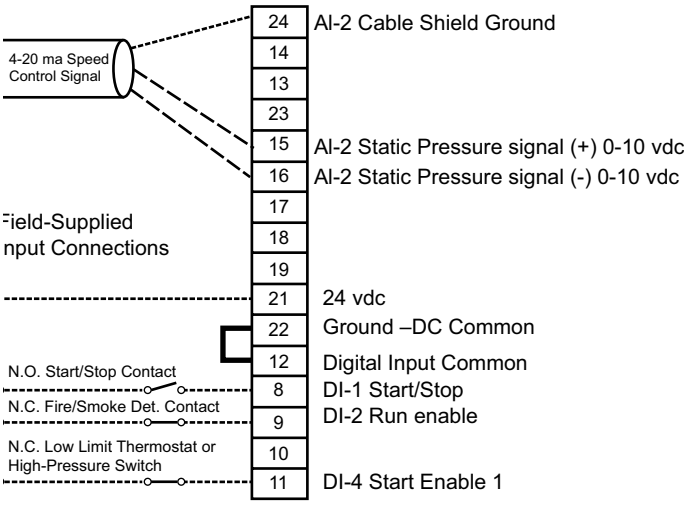

*Acceptable transducer output voltage ranges are 0-10 vdc, 0-5 vdc, and 2-10 vdc. Default sensor range is 0-10 vdc from factory. Use parameters 12.29 to configure sensor low voltage and parameter 12.30 to configure sensor high voltage.

NOTES:
1. All conductors are no. 22 AWG (American Wire Gage) minimum.
2. Install jumpers if fire/smoke detector, low limit thermostat, or high pressure switch are not required.
3. Program static pressure control set point using parameter 40.21 in volts vdc.

Fig. 25 — Field Wiring for Stand-Alone Static Pressure Control with 4-Wire Static Pressure Transducer (Voltage Output) (ACH180)

START-UP AND TEST

1. Close and secure the fan access door and the VFD cover.
2. Apply power and allow drive to initialize.
3. If fan is a direct drive type, then ensure VFD has been programmed with the correct values for parameters 30.12 and 30.14 to maximum fan speed and maximum VFD output frequency to limit motor speed to the fan maximum.

⚠ CAUTION

Failure to ensure parameters 30.12 and 30.14 are correct can result in damage to the fan wheel.

4. Verify max fan rpm from label on fan sled.
5. Verify motor Hz and nominal operating speed on motor nameplate.
6. Calculate the maximum frequency output from the VFD. Maximum frequency = motor frequency (Hz) * fan maximum speed (rpm) ÷ motor nominal operating speed (rpm).
7. Verify that parameter 30.12 (maximum fan speed) has been set to match value on the fan label.
8. Select MENU to enter the main menu.
9. Select PARAMETERS with the UP/DOWN buttons. Select MODIFIED then press SELECT.
10. Select parameter 30.12 and verify it equals the maximum fan speed.
11. If values are equal, then go to Step 14.
12. If values are not equal, select EDIT, press the UP/DOWN buttons to match the required value.
13. Select SAVE to store the modified value.
14. Select EXIT to return to the listing of parameters.
15. Select Parameter 30.14 and verify it equals the maximum VFD output frequency.
16. If values are equal, then go to Step 19.
17. If values are not equal, select EDIT, press the UP/DOWN buttons to match the required value.
18. Select SAVE to store the modified value.
19. Select EXIT to return to the listing of parameters.
20. Select EXIT to return to the main menu.
21. Press the HAND button and verify that the drive operates at 8 Hz.
22. Press Up arrow to increase speed and Down arrow to decrease speed.
23. Press the Off button and verify that the fan stops.
24. Press the Auto button to operate the drive from the Energy Management System (EMS) interface. Verify that all VFD interface functions are working (start/stop, speed controls, fire/smoke, shutdown, etc.) between the VFD and the EMS.
25. Refer to Table 8 for additional VFD information.

Table 8 — ACH580 - VFD Data[a]

39L MOTOR HP	ABB PART NO. ACH580-1	MAX. CONTINUOUS Output Amps	FUSE AMPS	MCCB RATED AMPS	PROGRAMMED SETTINGS Overload Trip Amps 4 Pole / 2 Pole	PROGRAMMED SETTINGS Max. Output Amps 4 Pole / 2 Pole
(208-230 VOLT / 3 PHASE / 60 HZ (PROGRAMMED TO OPERATE AT 208 VOLTS)						
1/2	04A6-2	4.6	10	15	1.8/ 1.7	3.0/ 2.2
3/4	04A6-2	4.6	10	15	2.6/ 2.5	3.2/ 3.0
1	04A6-2	4.6	10	15	3.5/ 3.2	3.8/ 3.8
1-1/2	06A6-2	6.6	10	15	5.2/ 4.2	5.8/ 5.8
2	07A5-2	7.5	10	15	6.7/ 5.9	7.2/ 7.0
3	10A6-2	10.6	15	15	9.0/ 8.5	10.0/ 9.5
5	017A-2	16.7	25	25	14.5/ 13.6	16.7/ 16.0
7-1/2	024A-2	24.2	30	30	21.4/ 20.7	24.0/ 23.0
10	031A-2	30.8	40	40	27.4/ 27.4	30.8/ 30.0
15	046A-2	46.2	60	60	40.5/ 40.5	46.2/ 43.0
20	059A-2	59.4	80	80	53.0/ 52.2	59.4/ 57.0
25	075A-2	74.8	100	100	67.0/ 66.0	74.0/ 71.0
30	088A-2	88	110	110	82.0/ 78.0	85.0/ 82.0
40	114A-2	114	150	150	92.0/107.0	114.0/110.0
208-230 volt / 3 phase / 60 Hz (programmed to operate at 230 volts)						
50	143A-2	143	200	200	125.0/130.0	142.0/130.0
60	169A-2	169	250	250	154.0/135.0	172.0/145.0
75	211A-2	211	300	300	186.0/166.0	221.0/172.0
100	273A-2	273	350	350	186.0/166.0	221.0/172.0
460 volt / 3 phase / 60 Hz (programmed to operate at 460 volts)						
1/2	02A1-4	2.1	10	15	0.9/ 1.0	1.5/ 1.2
3/4	02A1-4	2.1	10	15	1.3/ 1.2	1.7/ 1.5
1	02A1-4	2.1	10	15	1.6/ 1.5	1.9/ 1.7
1-1/2	03A0-4	3	10	15	2.2/ 2.0	2.8/ 2.3
2	03A5-4	3.5	10	15	2.7/ 2.7	3.0/ 3.0
3	04A8-4	4.8	10	15	4.0/ 3.8	4.5/ 4.2
5	07A6-4	7.6	10	15	6.2/ 6.0	6.9/ 6.5
7-1/2	012A-4	11.9	15	15	9.0/ 8.8	10.0/ 9.5
10	014A-4	14.4	20	20	12.0/ 11.6	13.6/ 12.8
15	023A-4	23	30	30	17.6/ 16.5	19.3/ 19.0
20	027A-4	27	40	40	23.0/ 23.0	25.0/ 25.0
25	034A-4	34	40	40	29.0/ 28.0	31.0/ 30.0
30	044A-4	44	50	50	34.5/ 34.0	38.0/ 38.0
40	052A-4	52	80	80	46.0/ 44.0	48.0/ 50.0
50	065A-4	65	90	90	58.0/ 55.0	60.0/ 60.0
60	077A-4	77	100	100	73.0/ 68.0	77.0/ 72.0
75	096A-4	96	125	125	90.0/ 85.0	94.0/ 90.0
100	124A-4	124	175	175	118.0/110.0	124.0/114.0
125	156A-4	156	200	200	141.0/139.0	147.0/147.0
150	180A-4	180	250	250	171.0/171.0	177.0/177.0
200-230 volt / 3 phase / 50 Hz programmed to operate at 200 volts)						
1	04A6-2	4.6	10	15	3.3/ 3.3	3.9/ 3.9
1-1/2	06A6-2	6.6	10	15	4.9/ 4.9	5.8/ 5.8
2	07A5-2	7.5	10	15	6.3/ 6.3	7.1/ 7.1
3	10A6-2	10.6	15	15	8.7/ 8.7	10.0/ 10.0
4	017A-2	16.7	25	25	14.0/ 14.0	16.7/ 16.7
7-1/2	024A-2	24.2	30	30	21.2/ 20.2	24.2/ 24.2
10	031A-2	30.8	40	40	27.2/ 27.4	30.8/ 30.8
15	046A-2	46.2	60	60	41.4/ 40.5	46.2/ 46.2
20	059A-2	59.4	80	80	53.4/ 49.0	59.4/ 56.0
25	075A-2	74.8	100	100	65.4/ 66.0	74.0/ 74.8
30	088A-2	88	110	110	78.0/ 78.0	86.0/ 86.0
40	114A-2	114	150	150	107.0/107.0	114.0/114.0
50	143A-2	143	200	200	135.0/135.0	135.0/135.0
60	169A-2	169	250	250	169.0/169.0	169.0/169.0
75	211A-2	211	300	300	210.0/210.0	210.0/210.0

Table 8 — ACH580 - VFD Data[a] (cont)

39L MOTOR HP	ABB PART	MAX. CONTINUOUS	FUSE AMPS	MCCB RATED AMPS	PROGRAMMED SETTINGS	
	NO. ACH580-1	Output Amps			Overload Trip Amps 4 Pole / 2 Pole	Max. Output Amps 4 Pole / 2 Pole
380 VOLTS / 3 PHASE / 50 HZ (programmed to operate AT 400 volts)						
1	02A1-4	2.1	10	15	1.7/ 1.7	2.3/ 2.3
1-1/2	03A0-4	3	10	15	2.5/ 2.5	3.3/ 3.3
2	03A5-4	3.5	10	15	3.2/ 3.2	3.8/ 3.6
3	04A8-4	4.8	10	15	4.5/ 4.5	5.4/ 5.3
5	07A6-4	7.6	15	15	7.0/ 7.0	8.5/ 8.0
7-1/2	012A-4	11.9	15	15	10.6/ 8.9	11.9/ 11.0
10	014A-4	14	20	20	13.6/ 11.6	15.4/ 14.6
15	023A-4	23	30	30	20.7/ 17.0	22.6/ 21.0
20	027A-4	27	40	40	26.7/ 24.5	29.3/ 29.0
25	034A-4	34	50	50	32.7/ 29.5	37.0/ 36.0
30	044A-4	44	60	60	39.0/ 39.0	44.0/ 44.0
40	052A-4	52	80	80	53.5/ 45.5	57.0/ 55.0
50	077A-4	77	100	100	67.5/ 67.5	70.0/ 70.0
60	096A-4	96	125	125	84.5/ 84.5	88.0/ 88.0
75	124A-4	124	175	175	105.0/105.0	105.0/105.0
100	156A-4	156	200	200	134.0/134.0	134.0/134.0
125	156A-4	156	200	250	134.0/134.0	134.0/134.0

NOTE(S):

a. Two-pole motors operate at a nominal 3600 rpm for 60 Hz and 3000 rpm for 50 Hz; 4-pole motors operate at a nominal 1800 rpm for 60 Hz and 1500 rpm for 50 Hz.

LEGEND

MCCB — Molded-Case Circuit Breaker

Table 9 — ACH180 VFD Data

39L MOTOR HP	ABB PART	MAX. CONTINUOUS	FUSE AMPS	MCCB RATED AMPS	PROGRAMMED SETTINGS	
	No. ACH180-04S	Output Amps			Overload Trip Amps 4 POLE / 2 Pole	MAX. Output Amps 4 Pole / 2 Pole
208-230 Volts / 3 Phase / 60 Hz (programmed to operate at 208 volts)						
1/2	04A8-2	4.6	10	15	1.8/ 1.7	3.0/ 2.2
3/4	04A8-2	4.6	10	15	2.6/ 2.5	3.2/ 3.0
1	04A8-2	4.6	10	15	3.5/ 3.2	3.8/ 3.8
1-1/2	06A9-2	6.6	10	15	5.2/ 4.2	5.8/ 5.8
2	07A8-2	7.4	10	15	6.7/ 5.9	7.2/ 7.0
3	15A6-2	14.6	15	15	9.0/ 8.5	10.0/ 9.5
5	17A5-2	16.7	25	25	14.5/ 13.6	16.7/ 16.0
7-1/2	025A-2	24.2	30	30	21.4/ 20.7	24.0/ 23.0
10	033A-2	30.8	40	40	27.4/ 27.4	30.8/ 30.0
15	048A-2	46.2	60	60	40.5/ 40.5	46.2/ 43.0
460 Volts / 3 Phase / 60 Hz (programmed to operate at 460 volts)						
1/2	02A6-4	2.5	10	15	0.9/ 1.0	1.5/ 1.2
3/4	02A6-4	2.5	10	15	1.3/ 1.2	1.7/ 1.5
1	02A6-4	2.5	10	15	1.6/ 1.5	1.9/ 1.7
1-1/2	03A3-4	3.1	10	15	2.2/ 2.0	2.8/ 2.3
2	04A0-4	3.8	10	15	2.7/ 2.7	3.0/ 3.0
3	05A6-4	5.3	10	15	4.0/ 3.8	4.5/ 4.2
5	09A4-4	8.9	10	15	6.2/ 6.0	6.9/ 6.5
7-1/2	12A6-4	12	15	15	9.0/ 8.8	10.0/ 9.5
10	17A0-4	16.2	20	20	12.0/ 11.6	13.6/ 12.8
15	025A-4	23.8	30	30	17.6/ 16.5	19.3/ 19.0

Table 9 — ACH180 VFD Data (cont)

39L MOTOR HP	ABB PART	MAX. CONTINUOUS	FUSE AMPS	MCCB RATED AMPS	PROGRAMMED SETTINGS	
	No. ACH180-04S	Output Amps			Overload Trip Amps 4 POLE / 2 Pole	MAX. Output Amps 4 Pole / 2 Pole
200-230 Volts / 3 Phase / 50 Hz (programmed to operate at 200 volts)						
1	04A8-2	4.6	10	15	3.3/ 3.3	3.9/ 3.9
1-1/2	06A9-2	6.6	10	15	4.9/ 4.9	5.8/ 5.8
2	07A8-2	7.4	10	15	6.3/ 6.3	7.1/ 7.1
3	15A6-2	14.6	15	15	8.7/ 8.7	10.0/ 10.0
4	17A5-2	16.7	25	25	14.0/ 14.0	16.7/ 16.7
7-1/2	025A-2	24.2	30	30	21.2/ 20.2	24.2/ 24.2
10	033A-2	30.8	40	40	27.2/ 27.4	30.8/ 30.8
15	048A-2	46.2	60	60	41.4/ 40.5	46.2/ 46.2
380 Volts / 3 Phase / 50 Hz (programmed to operate at 400 volts)						
1	02A6-4	2.5	10	15	1.7/ 1.7	2.3/ 2.3
1-1/2	03A3-4	3.1	10	15	2.5/ 2.5	3.3/ 3.3
2	04A0-4	3.8	10	15	3.2/ 3.2	3.8/ 3.6
3	05A6-4	5.3	10	15	4.5/ 4.5	5.4/ 5.3
5	09A4-4	8.9	15	15	7.0/ 7.0	8.5/ 8.0
7-1/2	12A6-4	12	15	15	10.6/ 8.9	11.9/ 11.0
10	17A0-4	16.2	20	20	13.6/ 11.6	15.4/ 14.6
15	025A-4	23.8	30	30	20.7/ 17.0	22.6/ 21.0

ACH580 VFD OPERATION

The VFD keypad is shown in Fig 26 and Fig. 27. The functions of SOFT KEYS (and), change depending on what is displayed on the screen. The function of SOFT KEY 1 matches the word in the lower left-hand box on the display screen. The function of SOFT KEY 2 matches the word in the lower right-hand box on the display screen. If the box is empty, then the SOFT KEY does not have a function on that specific screen. Arrow Keys are used to navigate through the menus. The OFF key is used to turn off the VFD. The AUTO key is used to change control of the drive to automatic control. The HAND key is used to change control of the drive to local (hand held) control. The HELP button is used to access the help screens.

For the VFD to operate on the units covered by this document, the drive must be set in AUTO mode. The word AUTO will appear in the upper left-hand corner of the VFD display. Press the AUTO button to set the drive in AUTO mode.

Fig. 26 — ACH580 VFD Keypad (Front)

Fig. 27 — ACH580 VFD Keypad (Back)

START UP CHANGING PARAMETERS INDIVIDUALLY

Initial start-up is performed at the factory. To start up the VFD by changing individual parameters, perform the following procedure:

1. Select MENU (Press) The Main menu will be displayed.
2. Use the UP or DOWN keys to highlight PARAMETERS on the display screen and press SEL (Press).
3. Use the UP or DOWN keys to highlight the desired parameter group and press SEL (Press).
4. Use the UP or DOWN keys to highlight the desired parameter and press EDIT (Press).
5. Use the UP or DOWN keys to change the value of the parameter.
6. Press SAVE (Press) to store the modified value. Press CANCEL (Press) to keep the previous value. Any modifications that are not saved will not be changed.

7. Choose another parameter or press EXIT/BACK (Press) to return to the listing of parameter groups. Continue until all the parameters have been configured and then press EXIT/BACK (Press) to return to the main menu.

NOTE: The current parameter value appears above the highlight parameter. To view the default parameter value, press the UP and DOWN keys simultaneously.

VFD MODES

The VFD has several different modes for configuring, operating, and diagnosing the VFD.

The modes are:

- Standard Display mode - shows drive status information and operates the drive
- Parameters mode - edits parameter values individually
- Start-up Assistant mode - guides start-up and configuration
- Changed Parameters mode - shows all changed parameters
- Drive Parameter Backup mode - stores or uploads the parameters
- Clock Set mode - sets the time and date for the drive
- I/O Settings mode - checks and edits the I/O settings

ACH580 STANDARD DISPLAY MODE

Use the standard display mode to read information on the drive status and operate the drive. To reach the standard display mode, press BACK until the LCD display shows status information as described below. (See Fig. 28.)

The top line of the LCD display shows the basic status information of the drive. The HAND icon indicates that the drive control is local from the control panel. The AUTO icon indicates that the drive is in remote control mode, such as the basic I/O or field bus.

The arrow icon indicates the drive and motor rotation status. A rotating arrow (clockwise or counterclockwise) indicates that the drive is running and at set point and the shaft direction is forward or reverse. A rotating blinking arrow indicates that the drive is running but not at set point. A stationary arrow indicates that the drive is stopped. For the units covered in this manual, the correct display rotation is clockwise.

The upper right corner shows the frequency set point that the drive will maintain. From Home view press Options then Edit Home View to change the Home layout, the middle of the LCD display can be configured to display 3 parameter values, Graphs or digital indicators. The default display shows (OUTPUT FREQ) in percent speed, (CURRENT) in amperes, and (AI1) in voltage DC.

The bottom corners of the LCD display show the functions currently assigned to the two soft keys. The lower middle displays the current time (if configured to show the time).

The first time the drive is powered up, it is in the OFF mode. To switch to local hand-held control and control the drive using the control panel, press and hold the HAND button. Pressing the HAND button switches the drive to hand control while keeping the drive running. Press the AUTO button to switch to remote input control. To start the drive press the HAND or AUTO buttons, to stop the drive press the OFF button.

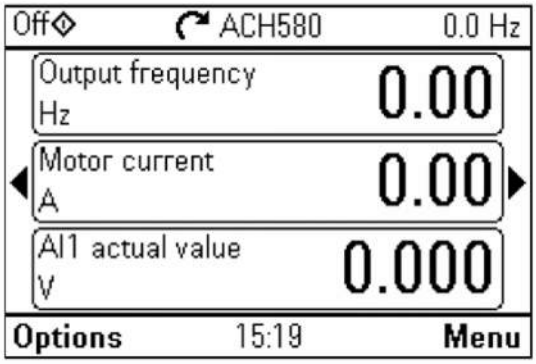

Fig. 28 — Standard Display Example

The top line of the LCD display shows the basic status information of the drive. The HAND icon indicates that the drive control is local from the control panel. The AUTO icon indicates that the drive is in remote control mode, such as the basic I/O or field bus.

The arrow icon indicates the drive and motor rotation status. A rotating arrow (clockwise or counterclockwise) indicates that the drive is running and at set point and the shaft direction is forward or reverse. A rotating blinking arrow indicates that the drive is running but not at set point. A stationary arrow indicates that the drive is stopped. For the units covered in this manual, the correct display rotation is clockwise.

The upper right corner shows the frequency set point that the drive will maintain.

From Home view press Options then Edit Home View to change the home layout, the middle of the LCD display can be configured to display 3 parameter values, Graphs or digital indicators. The default display shows (OUTPUT FREQ) in percent speed, (CURRENT) in amperes, and (AI1) in voltage DC.

The bottom corners of the LCD display show the functions currently assigned to the two soft keys. The lower middle displays the current time (if configured to show the time).

The first time the drive is powered up, it is in the OFF mode. To switch to local hand-held control and control the drive using the control panel, press and hold the HAND button. Pressing the HAND button switches the drive to hand control while keeping the drive running. Press the AUTO button to switch to remote input control. To start the drive press the HAND or AUTO buttons, to stop the drive press the OFF button.

To adjust the speed in HAND mode, press the UP or DOWN buttons (the reference changes immediately). The reference can be modified in the local control (HAND) mode, and can be parameterized (using Group 11 reference select) to also allow modification in the remote control mode.

PARAMETERS MODE

The Parameters mode is used to change the parameters on the drive. To change parameters, perform the following procedure:

1. Select MENU (Press). The Main menu will be displayed.
2. Use the UP or DOWN keys to highlight PARAMETERS on the display screen and press Select (Press).
3. Use the UP or DOWN keys to highlight the desired parameter group and press Select (Press).
4. Use the UP or DOWN keys to highlight the desired parameter and press EDIT (Press).
5. Use the UP or DOWN keys to change the value of the parameter.
6. Press SAVE (Press).to store the modified value. Press CANCEL (Press) to keep the previous value. Any modifications that are not saved will not be changed.

7. Choose another parameter or press BACK (Press) to return to the listing of parameter groups. Continue until all the parameters have been configured and then press EXIT (Press) to return to the main menu.

CHANGED PARAMETERS MODE

The Changed Parameters mode is used to view and edit recently changed parameters on the drive. To view the changed parameters, perform the following procedure:

1. Select MENU (Press).The Main menu will be displayed.
2. Use the UP or DOWN keys to highlight PARAMETERS on the display screen and press Select (Press).
3. Use the UP or DOWN keys to highlight MODIFIED on the display screen and press Select (Press). A list of the recently changed parameters will be displayed.
4. Use the UP or DOWN keys to highlight the desired parameter group and press EDIT (Press) to change the parameter if desired.
5. Press BACK (Press) to exit the Changed Parameters mode.

DRIVE PARAMETER BACKUP MODE

The drive parameter back up mode is used to export the parameters from one drive to another. The parameters can be uploaded from a VFD to the removable control panel. The control panel can then be transferred to another drive and the parameters downloaded into memory.

Depending on the motor and application, there are two options available. The first option is to download all parameters. This copies both application and motor parameters to the drive from the control panel. This is recommended when using the same application for drives of the same size. This can also be used to create a backup of the parameters group for the drive.

The second option downloads only the application parameters to the drive. This is recommended when using the same application for drives of different sizes. Parameters 99.07, 99.06, 99.08, 99.09, 99.10, and group 51 parameters and internal motor parameters are not copied.

UPLOAD ALL PARAMETERS

To upload and store parameters in the control panel from the VFD, only is required to insert the Keypad in the VFD slot (Fig. 29) and animation will appear loading the VFD configuration.

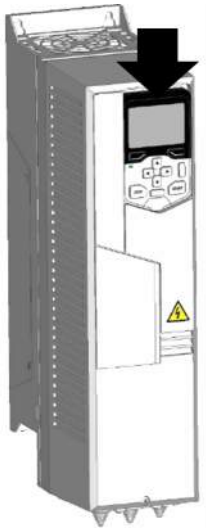

Fig. 29 — Insert keypad in Slot

DOWNLOAD ALL PARAMETERS FROM BACKUP

To download all parameters from the control panel to the VFD, perform the following procedure:

1. Install the control panel with the correct parameters onto the VFD.
2. Select MENU (Press). The Main menu will be displayed.
3. Use the UP or DOWN keys to highlight BACKUPS on the display screen and press SEL (Press).
4. Use the UP or DOWN keys to highlight the backup file and press SEL (Press).
5. The text Restoring Parameters will be displayed with a progress indicator. To stop the process, select CANCEL (Press).
6. When the download is complete, the text Parameter download successful will be displayed.
7. The display will then return to the PAR BACKUP menu. Select BACK (Press) to return to the main menu.
8. The control panel can now be disconnected from the drive.

CLOCK SET MODE

Use the clock set mode to set the date and time for the internal clock of the VFD. In order to use the timer functions of the VFD control, the internal clock must be set. The date is used to determine weekdays and is visible in the fault logs.

To set the clock, perform the following procedure:

1. Select MENU (Press). The Main menu will be displayed.
2. Use the UP or DOWN keys to highlight PRIMARY SETT. on the display screen and press ENTER (Press). The Sub list will be displayed.
3. Use the UP or DOWN keys to highlight Clock, region, display and press SEL (Press). This parameter is used to display or hide the clock on the screen. Use the UP or DOWN keys to change the parameter setting. Press OK (Press) to save the configuration and return to the Sub list menu.
4. Use the UP or DOWN keys to highlight SET TIME and press SEL (Press). Use the UP or DOWN keys to change the hours and minutes. Press OK (Press) to save the configuration and return to the Clock Set menu.
5. Use the UP or DOWN keys to highlight TIME FORMAT and press SEL (Press). Use the UP or DOWN keys to change the parameter setting. Press OK (Press) to save the configuration and return to the Clock Set menu.
6. Use the UP or DOWN keys to highlight SET DATE and press SEL (Press). Use the UP or DOWN keys to change the day, month, and year. Press OK (Press) to save the configuration and return to the Clock Set menu.
7. Use the UP or DOWN keys to highlight DATE FORMAT and press SEL (Press). Use the UP or DOWN keys to change the parameter setting. Press OK (Press) to save the configuration and return to the Clock Set menu.
8. Press BACK (Press) twice to return to the main menu.

I/O SETTINGS MODE

Use the I/O Settings mode to view and edit the I/O settings.

To configure the I/O settings, perform the following procedure:

1. Select MENU (Press). The Main menu will be displayed.

2. Use the UP or DOWN keys to highlight PRIMARY SETT. on the display screen and press SEL (Press). The Sub list will be displayed.
3. Use the UP or DOWN keys to highlight ADVANCED OPTIONS/FUNCTIONS. on the display screen and press SEL (Press). The Sub list will be displayed.
4. Use the UP or DOWN keys to highlight I/O SETTINGS on the display screen and press SEL (Press). The I/O Settings parameter list will be displayed.
5. Use the UP or DOWN keys to highlight the desired I/O setting and press SEL (Press).
6. Use the UP or DOWN keys to select the parameter to view. Press OK (Press).
7. Use the UP or DOWN keys to change the parameter setting. Press SAVE (Press). to save the configuration. Press CANCEL (SOFT KEY 1) to keep the previous value. Any modifications that are not saved will not be changed.
8. Press BACK (Press) twice to return to the main menu.

VFD Diagnostics

The drive detects error situations and reports them using:

1. Status LED on the control panel
2. Control panel display
3. The Fault Word and Alarm Word parameter bits

The form of the display depends on the severity of the error. The user can specify the severity for many errors by directing the drive to ignore the error situation, report the situation as an alarm, or report the situation as a fault.

FAULTS (RED LED LIT)

The VFD signals that it has detected a severe error, or fault, by:

1. Enabling the red LED on the drive (LED is either steady or flashing).
2. Setting an appropriate bit in a Fault Word parameter.
3. Overriding the control panel display with the display of a fault code.
4. Stopping the motor (if it was on).

The fault code on the control panel display is temporary. Pressing the MENU, (Press). buttons removes the fault message. The message reappears after a few seconds if the control panel is not touched, and the fault is still active. See Table 10 for a list of fault codes.

ALARMS (GREEN LED FLASHING)

For less severe errors, called alarms, the diagnostic display is advisory. For these situations, the drive is simply reporting that it had detected something unusual. In these situations, the drive:

1. Flashes the green LED on the drive (does not apply to alarms that arise from control panel operation errors).
2. Sets an appropriate bit in an Alarm Word parameter.
3. Overrides the control panel display with the display of an alarm code and/or name.

Alarm messages disappear from the control panel display after a few seconds. The message returns periodically as long as the alarm condition exists. See Table 10 for a list of alarm codes.

CORRECTING FAULTS

The recommended corrective action for faults is shown in the Fault Listing Table 10. The VFD can also be reset to remove the fault. If an external source for a start command is selected and is active, the VFD may start immediately after fault reset.

To reset a fault indicated by a flashing red LED, turn off the power for 5 minutes. To reset a fault indicated by a red LED (not flashing), press RESET from the control panel or turn off the power for 5 minutes. Depending on the value of parameter, digital input or serial communication could also be used to reset the drive. When the fault has been corrected, the motor can be started.

CORRECTING ALARMS

To correct alarms, first determine if the alarm requires any corrective action (action is not always required). Use Table 10 to find and address the root cause of the problem.

If diagnostics troubleshooting has determined that the drive is defective during the warranty period, contact Carrier.

CONTROL PANEL CLEANING

Use a soft damp cloth to clean the control panel. Avoid harsh cleaners which could scratch the display window.

BATTERY REPLACEMENT

A battery is only used in assistant control panels that have the clock function available and enabled. The battery keeps the clock operating in memory during power interruptions. The expected life for the battery is greater than ten years. To remove the battery, use a coin to rotate the battery holder on the back of the control panel. Replace the battery with type CR2032.

ACH180 VFD STANDARD KEYPAD DETAIL

By default, the ACH180 has an integrated control panel (see Fig. 30). Alternatively, advance remote control panel can be used, similar to ACH580.

1. Display, shows the **Home** view as default.
2. **Status LED,** green and red colors indicate the state and potential problems.
3. **Back** key, opens the **Options** view.
4. Arrow keys, for menu navigation and setting values.
5. **OK** key, opens the Menu in the **Home** view.
6. **Off** key, stops the drive and switches to the **Off** mode.
7. **Auto/Hand** key, opens a selection screen view that allows the user to select between **Auto** and **Hand** modes.

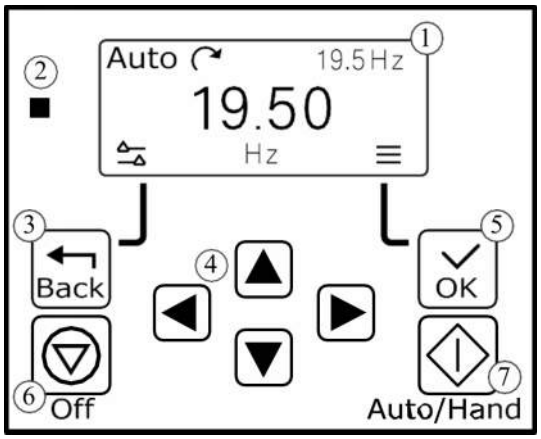

Fig. 30 — ACH180 Integrated Keypad

Submenus

The Main menu items have submenus. Some submenus also have menus and/or option lists. The content of the submenus depends on the drive type.

The Home view is the main view. You can open the main Menu and Options menu from the Home view (see Fig. 31).

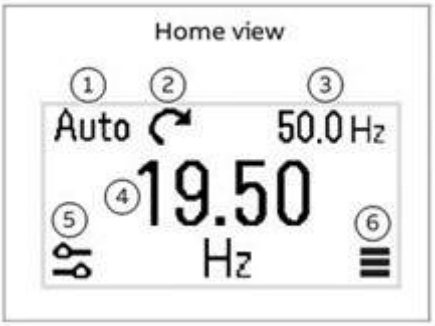

1	Control Location - Hand, Off or Auto
2	Rotation Direction - Forward or Reverse
3	Location Reference Setting - Enabled
4	Frequency - Target
5	Options Menu - Quick Access Menu
6	Main Menu - Menu List

Fig. 31 — ACH180 Home View

Options Menu and Main Menu

The ACH180 drives have 5 menu options available (see Fig. 32).

- motor data/motor parameters
- motor Control
- diagnostics
- energy efficiency
- parameters

Figures 32-37 show the available options and information within each of the submenus.

Fig. 32 — ACH180 Options Menu Items

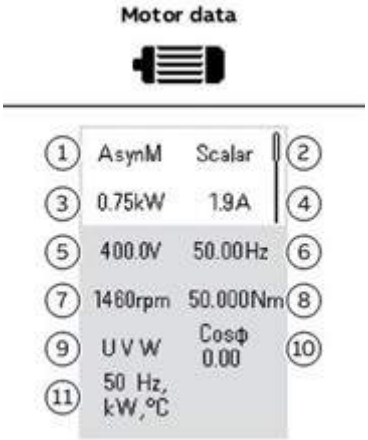

1	Motor Type - AsynM, PMSM, EC, Ti
2	Control Mode - Scalar, Vector
3	Nominal Power
4	Nominal Current
5	Nominal Voltage
6	Nominal Frequency
7	Nominal Speed
8	Nominal Torque
9	Phase order, U V W, U W V
10	Nominal Cosphi
11	Unit Selection, SI or US units

Fig. 33 — ACH180 Motor Data Submenu

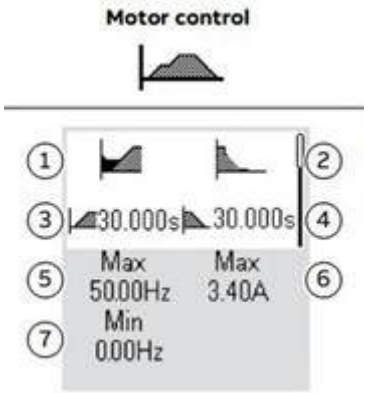

1	Start Mode - Const Time, Automatic
2	Stop Mode - Coast, Ramp, DC hold
3	Acceleration Time
4	Deceleration Time
5	Maximum Allowed Speed
6	Maximum Allowed Current
7	Minimum Allowed Speed

Fig. 34 — ACH180 Motor Control Submenu

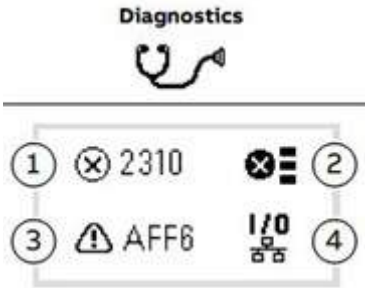

1	Active Fault - shows the fault code
2	Fault History - List Of Latest Fault Codes (newest first)
3	Active Warnings - Shows the Warning Code
4	Connection Status - Fieldbus and I/O Signals

Fig. 35 — ACH180 Diagnostics Submenu

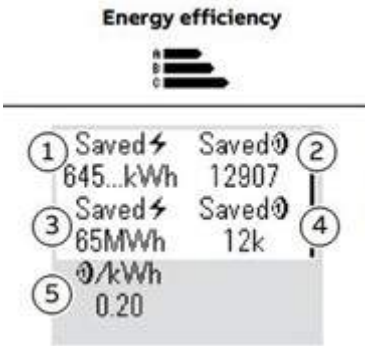

Fig. 36 — ACH180 Energy Efficiency Submenu

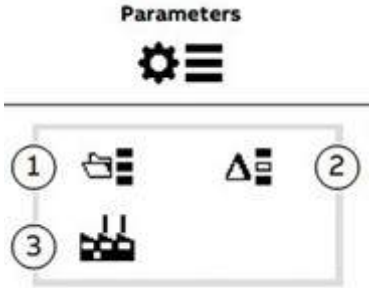

1	Complete Parameter List - Groups Menu with Complete Parameters and Parameter Levels
2	Modified Parameter List Parameter Restore - Resets The Drive To The Factory Default Parameters
3	Active Warnings - Shows the Warning Code

Fig. 37 — ACH180 Parameters Submenu

ACH180 VFD Diagnostics

The drive detects error situations and reports them using the Status LED on the control panel (see Fig 30). See Table 10 for more information about the Fault and Alarm Codes.

FAULTS (RED LED LIT)

The VFD signals that it has detected a severe error, or fault, by:

1. Enabling the red LED on the drive (LED is either steady or flashing).
2. Setting an appropriate bit in a Fault Word parameter.
3. Overriding the control panel display with the display of a fault code.
4. Stopping the motor (if it was on).

ALARMS (GREEN LED FLASHING)

For less severe errors, called alarms, the diagnostic display is advisory. For these situations, the drive is simply reporting that it had detected something unusual. In these situations, the drive:

1. Flashes the green LED on the drive (does not apply to alarms that arise from control panel operation errors).
2. Sets an appropriate bit in an Alarm Word parameter.
3. Overrides the control panel display with the display of an alarm code and/or name.

Table 10 — Fault and Alarm Codes for ACH580 VFD/ACH180 VFD

CODE (HEX)	WARNING / AUX. CODE	CAUSE	WHAT TO DO
A2B1	Overcurrent	Output current has exceeded internal fault limit. In addition to an actual overcurrent situation, this warning may also be caused by an earth fault or supply phase loss.	Check motor load.
			Check acceleration times in parameter group *23 Speed reference ramp* (speed control) or *28 Frequency reference chain* (frequency control). Also check parameters *46.01 Speed scaling*, *46.02 Frequency scaling* and *46.03 Torque scaling*.
			Check motor and motor cable (including phasing and delta/star connection). Check for an earth fault in motor or motor cables by measuring the insulation resistances of motor and motor cable. See chapter *Electrical installation*, section *Checking the insulation of the assembly* in the *Hardware manual* of the drive.
			Check there are no contactors opening and closing in motor cable.
			Check that the start-up data in parameter group *99 Motor data* corresponds to the motor rating plate.
			Check that there are no power factor correction capacitors or surge absorbers in motor cable.

Table 10 — Fault and Alarm Codes for ACH580 VFD/ACH180 VFD (cont)

CODE (HEX)	WARNING / AUX. CODE	CAUSE	WHAT TO DO
A2B3	Earth leakage	Drive has detected load unbalance typically due to earth fault in motor or motor cable.	Check there are no power factor correction capacitors or surge absorbers in motor cable.
			Check for an earth fault in motor or motor cables by measuring the insulation resistances of motor and motor cable. See chapter *Electrical installation*, section *Checking the insulation of the assembly* in the *Hardware manual* of the drive. If an earth fault is found, fix or change the motor cable and/or motor. If no earth fault can be detected, contact your local ABB representative.
A2B4	Short circuit	Short-circuit in motor cable(s) or motor.	Check motor and motor cable for cabling errors.
			Check motor and motor cable (including phasing and delta/star connection). Check for an earth fault in motor or motor cables by measuring the insulation resistances of motor and motor cable. See chapter *Electrical installation*, section *Checking the insulation of the assembly* in the *Hardware manual* of the drive.
			Check there are no power factor correction capacitors or surge absorbers in motor cable.
A6A4	Motor nominal value	The motor parameters are set incorrectly.	Check the auxiliary code. See actions for each code below.
	Motor nominal value 0001	The drive is not dimensioned correctly.	Check the auxiliary code. See actions for each code below.
			Check the settings of the motor configuration parameters in groups 98 and 99.
			Check that the drive is sized correctly for the motor.
A780	Motor stall Programmable warning: *31.24 Stall function*	Motor is operating in stall region because of, for example, excessive load or insufficient motor power.	Check motor load and drive ratings. Check fault function parameters.
A783	Motor overload	Motor current is too high.	Check for overloaded motor.
			Adjust the parameters used for the motor overload function (*35.51...35.53*) and *35.55...35.56*.
A784	Motor disconnect	All three output phases are disconnected from motor.	Check that switches between drive and motor are closed.
			Check that all cables between drive and motor are connected and secured. If no issue was detected and drive output was actually connected to motor, contact ABB.
A7AB	Extension I/O configuration failure	Installed extension module is not the same as configured.	Check that the installed extension module (shown by parameter *15.02 Detected extension module*) is the same as selected by parameter *15.01 Extension module type*.
A7C1	FBA A communication Programmable warning: *50.02 FBA A comm loss func*	Cyclical communication between drive and fieldbus adapter module A or between PLC and fieldbus adapter module A is lost.	Check status of fieldbus communication. See user documentation of fieldbus interface.
			Check settings of parameter groups *50 Fieldbus adapter (FBA)*, *51 FBA A settings*, *52 FBA A data in* and *53 FBA A data out*.
			Check cable connections.
			Check if communication master is able to communicate.
A7CE	EFB comm loss Programmable warning: *58.14 Communication loss action*	Communication break in embedded fieldbus (EFB) communication.	Check the status of the fieldbus master (online/offline/error etc.).
			Check cable connections to the EIA-485/X5 terminals 29, 30 and 31 on the control unit.
A7EE	Panel loss Programmable warning: *49.05 Communication loss action*	Control panel or PC tool selected as active control location for drive has ceased communicating.	Check PC tool or control panel connection.
			Check control panel connector.
			Check mounting platform if being used. Disconnect and reconnect the control panel.
A88F	Cooling fan	Maintenance timer limit exceeded.	Consider changing the cooling fan. Parameter *05.04 Fan on-time counter* shows the running time of the cooling fan.
AFAA	Auto reset	A fault is about to be auto reset.	Informative warning. See the settings in parameter group *31 Fault functions*.
AFE1	Emergency stop (off2)	Drive has received an emergency stop (mode selection off2) command.	Check that it is safe to continue operation. Then return emergency stop push button to normal position. Restart drive.
			If the emergency stop was unintentional, check the source selected by parameter *21.05 Emergency stop source*.
AFE2	Emergency stop (off1 or off3)	Drive has received an emergency stop (mode selection off1 or off3) command.	Check that it is safe to continue operation. Then return emergency stop push button to normal position. Restart drive.
			If the emergency stop was unintentional, check the source selected by parameter *21.05 Emergency stop source*.
			Informative warning. See parameter *21.22 Start delay*.
AFE9	Start delay	The start delay is active and the drive will start the motor after a predefined delay.	Check that it is safe to continue operation. Then return emergency stop push button to normal position. Restart drive.
			If the emergency stop was unintentional, check the source selected by parameter *21.05 Emergency stop source*.
			Informative warning. See parameter *21.22 Start delay*.
AFED	Run permissive	Run permissive is keeping the drive from running the motor.	Check the setting of (and source selected by) parameter *20.40 Run permissive*.
AFEE	Start interlock 1	Start interlock 1 is keeping the drive from starting.	Check the signal source selected for parameter *20.41 Start interlock 1*.

Table 10 — Fault and Alarm Codes for ACH580 VFD/ACH180 VFD (cont)

CODE (HEX)	WARNING / AUX. CODE	CAUSE	WHAT TO DO
AFEF	Start interlock 2	Start interlock 2 is keeping the drive from starting.	Check the signal source selected for parameter *20.42 Start interlock 2*.
AFF0	Start interlock 3	Start interlock 3 is keeping the drive from starting.	Check the signal source selected for parameter *20.43 Start interlock 3*.
AFF1	Start interlock 4	Start interlock 4 is keeping the drive from starting.	Check the signal source selected for parameter *20.44 Start interlock 4*.
AFF2	Run permissive forced warning	A forced DI is used as a source for parameter *20.40 Run permissive*.	If *20.40 Run permissive* uses DIx as the source, check if the bit corresponding to DIx in parameter *10.03 DI force selection* is 1.
AFF3	Start interlock forced warning	One or more forced DIs is used as a source for one or more of parameters *20.41 Start interlock 1. 20.44 Start interlock 4*.	Check all parameters *20.41 Start interlock 1 ... 20.44 Start interlock 4*. If any of these parameters uses DIx as the source, check if the bit corresponding to DIx in parameter *10.03 DI force selection* is 1.
AFF5	Override new start required	The Safe torque off function was active and has been reset while in Override.	A new start signal is required to start the drive again.
AFF6	Identification run	Motor ID run will occur at next start.	Informative warning.
AFF8	Motor heating active	Pre-heating is being performed	Informative warning.
			Motor pre-heating is active. Current specified by parameter *21.16 Preheating current* is being passed through the motor.
AFFE	Override active	Drive is in Override mode.	Informative warning.
B5A2	Power applied	The drive was powered up or the control board was rebooted successfully.	Informative event.
B681	Hand mode selected	The drive was placed in Hand mode.	Informative event. Check the control panel to ensure that the current control location is correct.
B682	Off mode selected	The drive was placed in Off mode.	Informative event. Check the control panel to ensure that the current control location is correct.
B683	Auto mode selected	The drive was placed in Auto mode.	Informative event. Check the control panel to ensure that the current control location is correct.
2310	Overcurrent	Output current has exceeded internal fault limit.	Check motor load.
		In addition to an actual overcurrent situation, this fault may also be caused by an earth fault or supply phase loss.	Check acceleration times in parameter group *23 Speed reference ramp* (speed control) or *28 Frequency reference chain* (frequency control). Also check parameters *46.01 Speed scaling*, *46.02 Frequency scaling* and *46.03 Torque scaling*.
			Check motor and motor cable (including phasing and delta/star connection). Check there are no contactors opening and closing in motor cable.
			Check that the start-up data in parameter group 99 corresponds to the motor rating plate.
			Check that there are no power factor correction capacitors or surge absorbers in motor cable.
			Check for an earth fault in motor or motor cables by measuring the insulation resistances of motor and motor cable. See chapter *Electrical installation*, section *Checking the insulation of the assembly* in the *Hardware manual* of the drive.
FF61	ID run	Motor ID run was not completed successfully.	Check safety circuit connections. For more information, see chapter *The Safe torque off function* in the *Hardware manual* of the drive and description of parameter *31.22 STO indication run/stop* (page *520*).
			Check the value of parameter *95.04 Control board supply*.
			Check the nominal motor values in parameter group *99 Motor data*. Check that no external control system is connected to the drive.
			Cycle the power to the drive (and its control unit, if powered separately). Check that no operation limits prevent the completion of the ID run. Restore parameters to default settings and try again.
			Check that the motor shaft is not locked. Check the auxiliary code. See actions for each code.

ACH580 Maintenance Schedule

Valid for drives manufactured or maintained in 2017 onwards.

Recommended maintenance intervals and component replacements are based on specified operational and environmental conditions. Annual drive inspections are recommended to ensure the highest reliability and optimum performance. See Tables 11-13 for maintenance schedule information.

NOTE: Long term operation near the maximum specified ratings or environmental conditions may require shorter maintenance intervals for certain components.

Table 11 — Maintenance - Annual Actions

RECOMMENDED ANNUAL ACTIONS BY THE USER	
Cabinet Door Filters IP54	R
Quality of Supply Voltage	P
Spare Parts	
Spare Parts	I
DC Circuit Capacitors Reforming for Spare Modules and Spare Capacitors	P
Inspections by User	
IP22 and IP42 Air Inlet and Outlet Meshes	I
Tightness of Terminals	I
Dustiness, Corrosion and Temperature	I
Heat Sink Cleaning	I

LEGEND

I — **Inspection** (inspection and maintenance action if needed)
P — **Performance** of on/off-site work (commissioning, tests, measurements, or other work)
R — **Replacement**

Table 12 — Maintenance Cooling

COOLING	YEARS FROM START-UP						
	3	6	9	12	15	18	21
Fans, IP21 UL (NEMA) Type 1 frames R1 to R9							
Main Cooling Fans R0-R5		R		R		R	
Main Cooling Fans R6-R8 LONGLIFE			R			R	
Auxiliary Cooling Fan for Circuit Boards, R4v2 89A/IP21 and R4v2 77A/IP21		R		R		R	
Auxiliary Cooling Fan for Circuit Boards, Only R5 – R8 LONGLIFE			R			R	

LEGEND

R — Replacement

Table 13 — Maintenance Aging

AGING	YEARS FROM START-UP						
	3	6	9	12	15	18	21
Common, Control Panel Battery							
Control Panel Battery			R			R	
Cabinet Auxiliary 24 VDC Power Supplies and Buffers >-<				R			
Frequency Converter Frames R1 to R8							
CCU Control Unit				R			
Frequency Converter Frames R6 to R8							
Flat Ribbon Cables				R			
DC Circuit Electrolytic Capacitors and Discharging Resistors			R			R	
ZINT, ZPOW, ZINP, QINT Module Internal Circuit Boards				R			

LEGEND

R — Replacement

MAIN FAN REPLACEMENT IP21 AND IP55 (UL TYPE 1 AND UL TYPE 12)

The main cooling fan of the VFD has a life span of about 60,000 operating hours at maximum rated operating temperature and drive load. The expected life span doubles for each 18°F drop in the fan temperature (fan temperature is a function of ambient temperatures and drive loads).

Fan failure can be predicted by the increasing noise from fan bearings and the gradual rise in the heat sink temperature in spite of heat sink cleaning. If the drive is operated in a critical part of a process, fan replacement is recommended once these symptoms start appearing. Replacement fans are available from Carrier.

To replace the main fan for frame sizes R1 through R8, perform the following (see Fig. 38-42):

1. Remove power from drive. Wait for 5 minutes and then make sure by measuring that there is no voltage.
2. Remove drive cover.

3. For frame sizes R1, R2, R3 and R4 press together the retaining clips on the fan cover and lift. For frame sizes R5, R6, R7 and R8, remove the two mounting screws of the fan mounting plate at the bottom of the drive.
4. Disconnect the fan cable.
5. Install the new fan by reversing Steps 2 to 4.
6. Restore power.

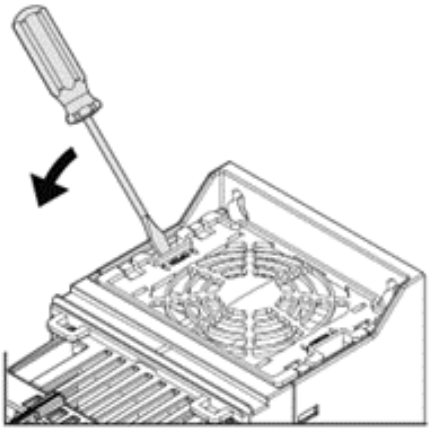

Fig. 38 — Main Fan Removal (Frame Sizes R1 up to R4)

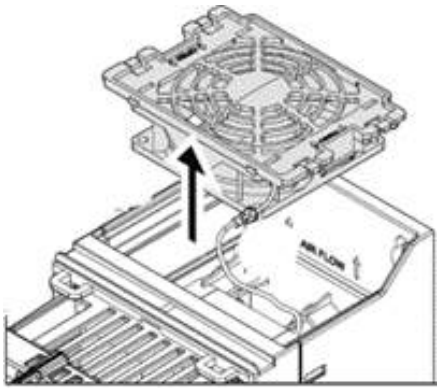

Fig. 39 — Main Fan Removal (Frame Sizes R1 up to R3)

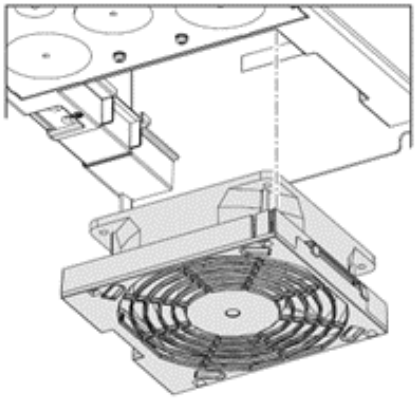

Fig. 40 — Main Fan Removal (Frame Sizes R4)

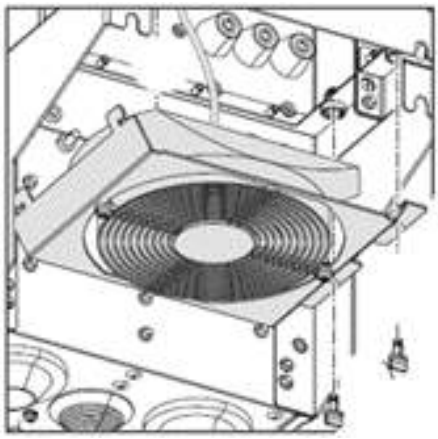

Fig. 41 — Main Fan Removal (Frame Sizes R5 up to R8)

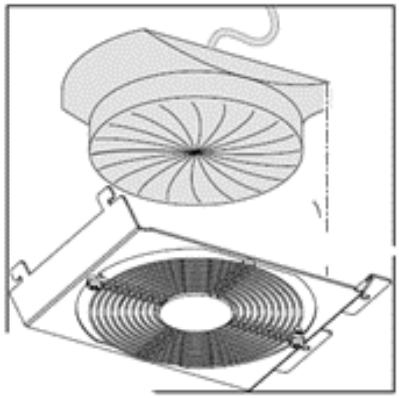

Fig. 42 — Main Fan Removal (Frame Sizes R5 up to R8)

AUXILIARY COOLING FAN REPLACEMENT
IP21 AND IP55 (UL TYPE 1 AND UL TYPE 12)

The VFD IP21 and IP55 / UL Type 1 and 12 enclosures have an additional internal fan to circulate air inside the enclosure.

To replace the internal enclosure fan for frame sizes R6 to R8, perform the following:

1. Remove power from drive. Wait for 5 minutes and then make sure by measuring that there is no voltage.
2. Remove the front cover.
3. Unplug fan power supply wires from the drive (see Fig. 43).
4. Release the retaining clips.
5. Pull off the fan (see Fig. 44).
6. Install the new fan in reverse order.

NOTE: Make sure that the arrow on the fan points up.

To replace the internal enclosure fan for frame sizes IP55 (UL Type 12) R1, R2 and R3, perform the following (see Fig. 45-49):

1. Remove power from drive (R1, R2 and R3).
2. Remove the front cover (R1, R2 and R3).
3. Unplug fan power supply wires from the drive (R1, R2 and R3).
4. Remove the fingerguard. Insert a screwdriver into the hole of the fingerguard (R1, R2 Only).
5. Unplug the fan power supply wires from the drive (R1, R2 and R3).
6. Pull off the plastic housing (R3 Only).
7. Pull off the fan (R1, R2 and R3).

8. Install the new fan in reverse order (R1, R2 and R3).

NOTE: Make sure that the arrow on the fan points to the same direction as the arrow on the drive frame.

To replace the internal enclosure fan for frame sizes IP55 (UL Type 12) frame R4; IP21 and IP55 (UL Type 1 and UL Type 12) frame R5 perform the following (see Fig. 45, 46 and 49):

1. Remove power from drive.
2. Remove the front cover.
3. Unplug fan power supply wires from the drive.
4. Remove the fingerguard: Insert a screwdriver into the hole of the fingerguard.
5. Unplug the fan power supply wires from the drive.
6. Pull off the plastic housing.
7. Pull off the fan.
8. Install the new fan in reverse order.

NOTE: Make sure that the arrow on the fan points to the same direction as the arrow on the drive frame.

CONTROL PANEL CLEANING

Use a soft damp cloth to clean the control panel. Avoid harsh cleaners which could scratch the display window.

BATTERY REPLACEMENT

A battery is only used in assistant control panels that have the clock function available and enabled. The battery keeps the clock operating in memory during power interruptions. The expected life for the battery is greater than ten years. To remove the battery, use a coin to rotate the battery holder on the back of the control panel. Replace the battery with CR2032.

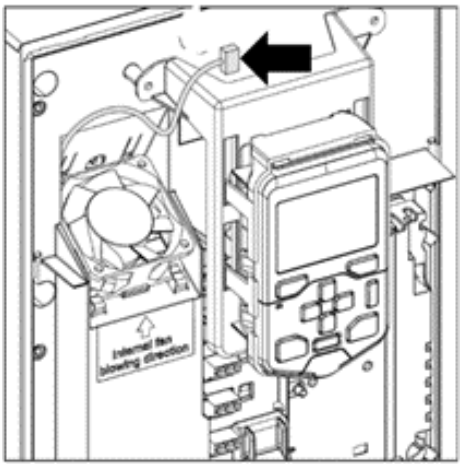

Fig. 43 — Auxiliary Fan — Remove Fan Power Supply Wires (Frame Sizes R6 up to R8)

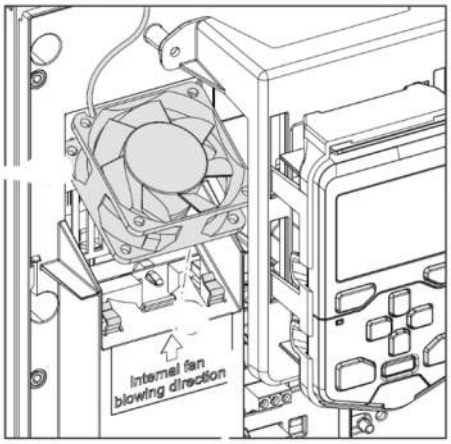

Fig. 44 — Auxiliary Fan Removal (Frame Sizes R6 up to R8)

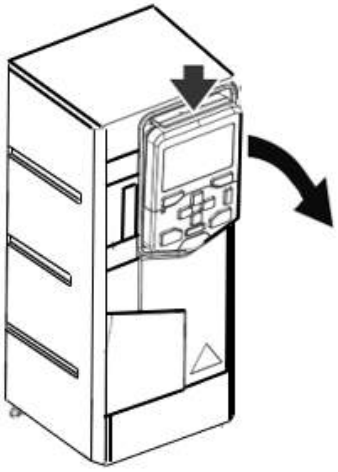

Fig. 45 — Auxiliary Fan Removal (Frame Sizes R1, R2, R3, R4 and R5)

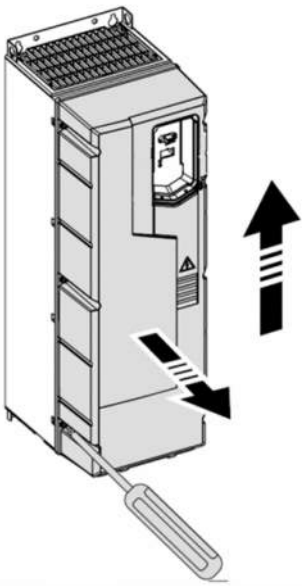

Fig. 46 — Drive Cover Removal (Frame Sizes R1, R2, R3, R4 and R5)

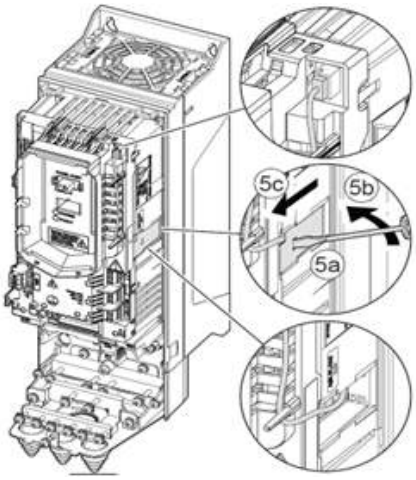

Fig. 47 — Auxiliary Fan Removal (Frame Sizes R1 and R2)

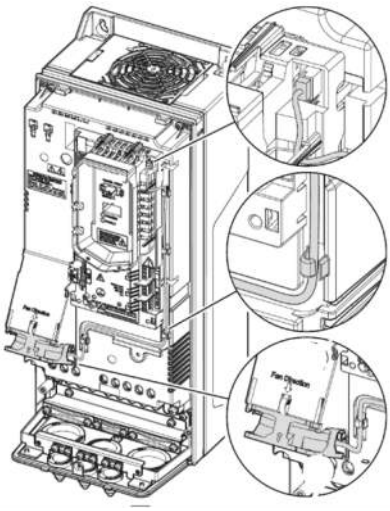

Fig. 48 — Auxiliary Fan Removal (Frame Sizes R3)

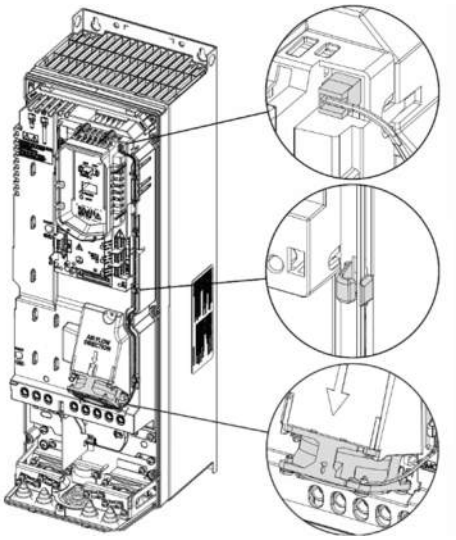

Fig. 49 — Auxiliary Fan Removal (Frame Sizes R4 and R5)

RECOMMENDED MAINTENANCE (ACH180)

It is recommended that the ACH180 receive regular maintenance by the user. These maintenance items include:

- Control panel cleaning.
- Annual actions (see Table 14).
- Cleaning the heatsink.

Control Panel Cleaning

Use a soft damp cloth to clean the control panel. Avoid harsh cleaners which could scratch the display window.

Table 14 — Recommended Annual Actions by the User

CONNECTIONS AND ENVIRONMENT	
Quality of the Supply Voltage	P
SPARE PARTS	
Spare Parts	I
Reforming DC Circuit Capacitors of Spare Drives	P
INSPECTIONS	
Tightness of Terminals	I
Dustiness, Corrosion and Temperature	I
Cleaning the Heatsink	P

MAINTENANCE TASK/ OBJECT[a,b]	**YEARS FROM START UP**						
	3	6	9	12	15	18	21
COOLING FANS							
Main Cooling Fan (Frames R1-R4)		R		R		R	
FUNCTIONAL							
Safety Function Test							
SAFETY	(See the maintenance information of the safety function.)						
Component Expiry (mission time T_M)	20 years						

NOTE(S):

a. Maintenance and component replacement intervals are based on the assumption that the equipment is operated within the specified ratings and ambient conditions. ABB recommends annual drive inspections to ensure the highest reliability and optimum performance.

b. Long term operation near the specified maximum ratings or ambient conditions may require shorter maintenance intervals for certain components. Consult your local ABB Service representative for additional maintenance recommendations.

LEGEND

I — Inspection (visual inspection and maintenance action is needed)

P — Performance of on off-site work (commissioning tests, measurements or other work)

R — Replacement

Cleaning the Heatsink

The drive module heatsink fins pick up dust from the cooling air. The drive runs into overtemperature warnings and faults if the heatsink is not clean. When necessary, clean the heatsink as follows.

1. Stop the drive. Refer to the section "SAFETY CONSIDERATIONS" on page 2 before performing any work.
2. Remove the module cooling fan(s). See the separate instructions.
3. Blow dry, clean and oil-free compressed air from bottom to top and simultaneously use a vacuum cleaner at the air outlet to trap the dust. If there is a risk of dust entering adjoining equipment, do the cleaning in another room.
4. Reinstall the cooling fan.

Replacing the Cooling Fans

Parameter 05.04 Fan On-Time Counter shows the running time of the cooling fan. After you replace the fan, reset the fan counter.

NOTE: Replacement fans are available from Carrier Replacement Components (RC).

1. Stop the drive and lockout unit energy.
2. Press the two clips by fingers to open the fan cover.
3. Carefully lift the fan cover out of the drive. Note that the fan cover holds the cooling fan (see Fig. 50).

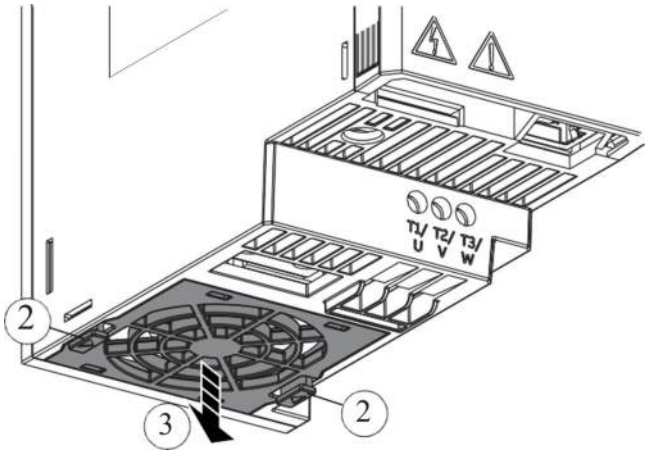

Fig. 50 — Lifting the Fan Cover out of Drive

4. Disconnect the fan power cable. (See Fig. 51.)

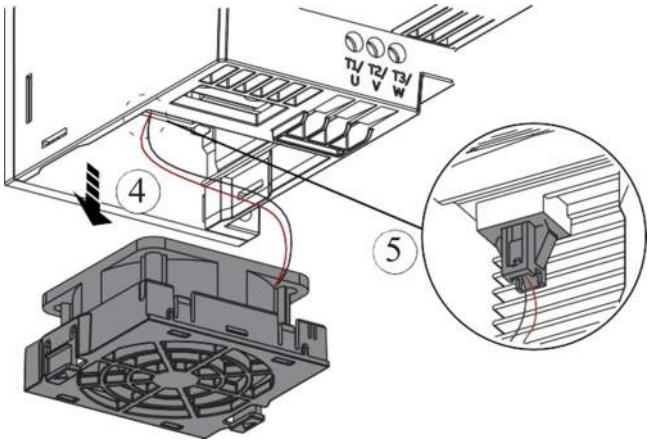

Fig. 51 — Disconnecting the Fan

5. Free the fan clips and remove the fan from the fan cover.
6. Install the new fan into the fan cover. Make sure that the air flow is in the correct direction. The air flows in from the bottom of the drive and out from the top of the drive. As shown in the following figure, the side with the fan power cable is aligned to the double bars sign on the fan cover (see Fig. 52).

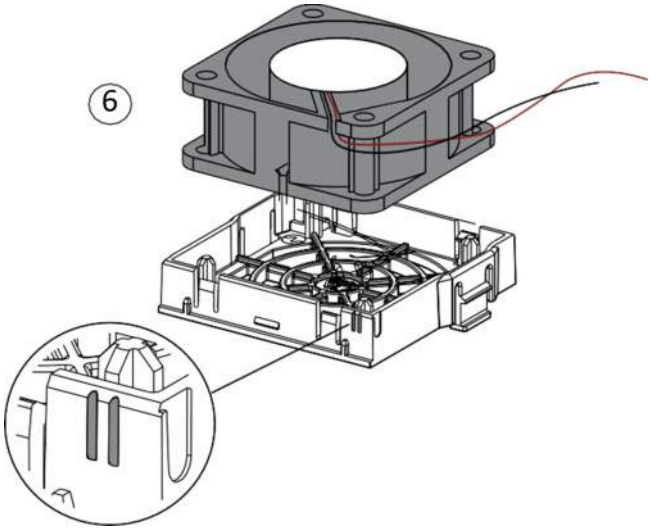

Fig. 52 — Connect Fan To Power

7. Connect the fan power cable (see Fig. 53).

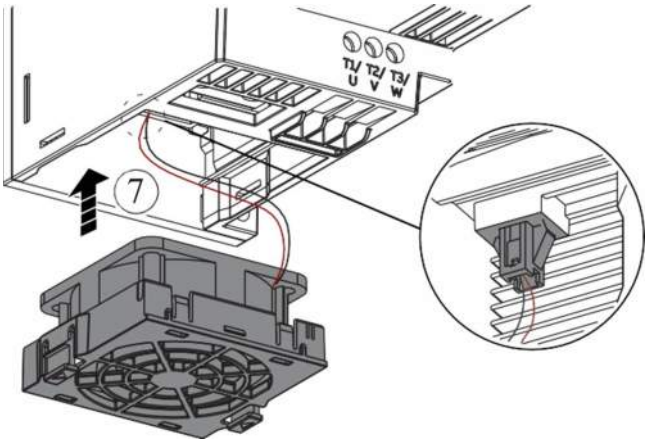

Fig. 53 — Place Fan Cover Back into Drive

8. Carefully put the fan cover into position in the drive. Make sure that the fan power cable is routed correctly. Push the cover to lock into position (see Fig. 54).

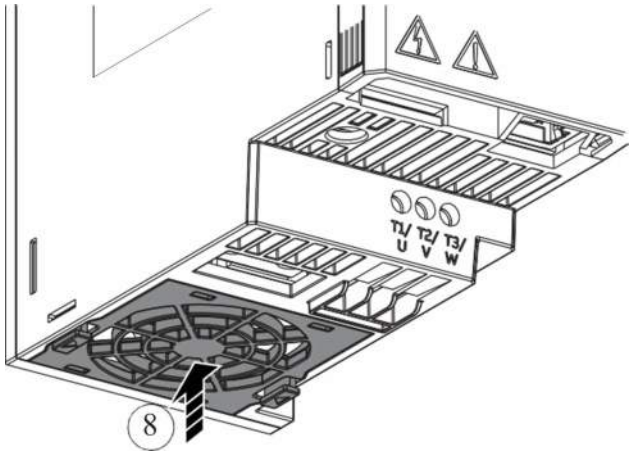

Fig. 54 — Place Fan Cover Back into Drive

Install Sheaves on Motor and Fan Shafts

Factory-supplied drives are pre-aligned and tensioned, however, Carrier recommends that you check the belt tension and alignment before starting the unit. Always check the drive alignment after adjusting belt tension.

When field installing or replacing sheaves, install sheaves on fan shaft and motor shaft for minimum overhang (see Fig. 55). Use care when mounting sheave on fan shaft; too much force may damage bearing. Remove rust-preventative coating or oil from shaft. Make sure shaft is clean and free of burrs. Add grease or lubricant to bore of sheave before installing.

The 39L fan, shaft, and drive pulley are balanced as a complete assembly to a high degree of accuracy. If excessive unit vibration is present after fan pulley replacement, the unit must be rebalanced. For drive ratio changes, always reselect the motor pulley — do not change the fan pulley.

ALIGNMENT

Make sure that fan shafts and motor shafts are parallel and level. The most common causes of mis-alignment are nonparallel shafts and improperly located sheaves. Where shafts are not parallel, belts on one side are drawn tighter and pull more than their share of the load. As a result, these belts wear out faster, requiring the entire set to be replaced before it has given maximum service. If misalignment is in the sheave, belts will enter and leave the grooves at an angle, causing excessive belt cover and sheave wear.

1. Shaft alignment can be checked by measuring the distance between the shafts at 3 or more locations. If the distances are equal, then the shafts will be parallel.
2. Confirm alignment using the next sections.

Fixed sheaves

To check the location of the fixed sheaves on the shafts, a straightedge or a piece of string can be used. If the sheaves are properly lined up the string will touch them at the points indicated by the arrows in Fig. 56.

Adjustable sheave

To check the location of adjustable sheave on shaft, make sure that the centerlines of both sheaves are in line and parallel with the bearing support channel (see Fig. 56). Adjustable pitch drives are installed on the motor shaft.

⚠ CAUTION

With adjustable sheave, do not exceed maximum fan rpm.

3. Rotating each sheave a half revolution will determine whether the sheave is wobbly or the drive shaft is bent. Correct any misalignment.
4. With sheaves aligned, tighten cap screws evenly and progressively.

NOTE: There should be a 1/8-in. to 1/4-in. gap between the mating part hub and the bushing flange. If gap is closed, the bushing is probably the wrong size.

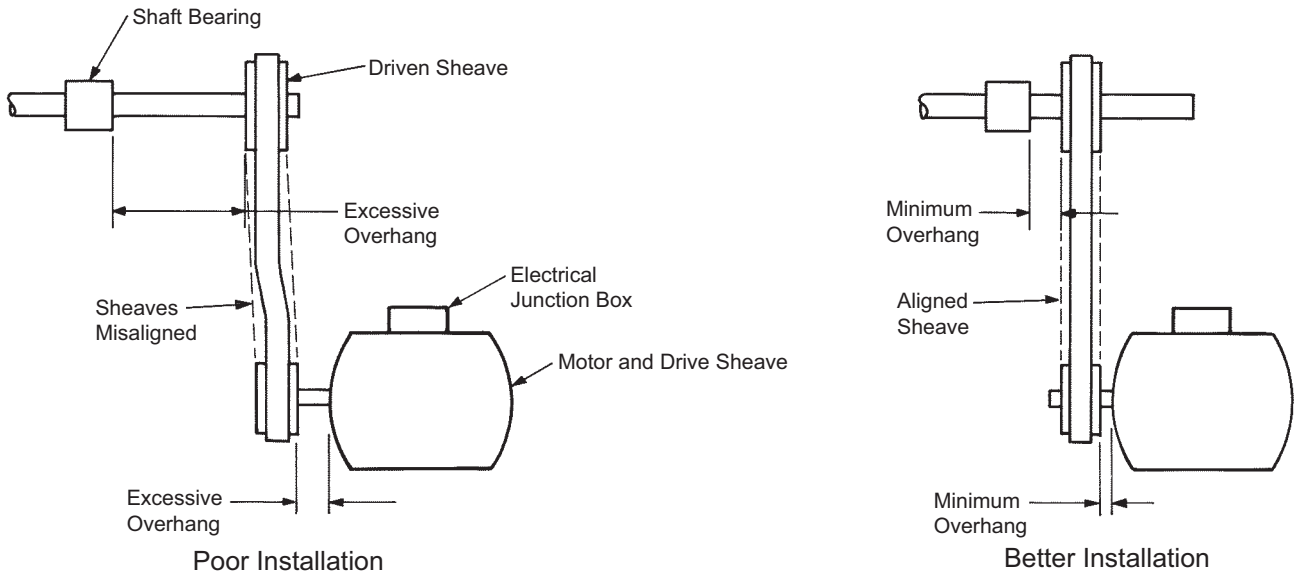

Fig. 55 — Determining Sheave-Shaft Overhang

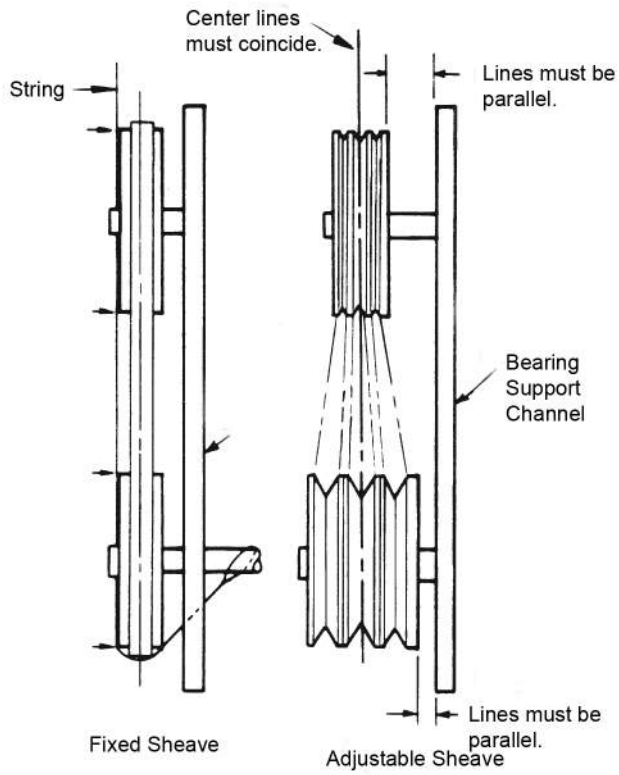

Fig. 56 — Sheave Alignment

5. With taper-lock bushed hubs, be sure the bushing bolts are tightened evenly to prevent side-to-side pulley wobble. Check by rotating sheaves and rechecking sheave alignment. When substituting field-supplied sheaves for factory-supplied sheaves, consider that the fan shaft sheave has been factory balanced with fan and shaft as an assembly. For this reason, substitution of motor sheave is preferable for final speed adjustment.

Install V-Belts

When installing or replacing belts, always use a complete set of new belts. Mixing old and new belts will result in the premature wear or breakage of the newer belts.

Refer to label on inside of fan access door for information on factory-supplied drive.

1. Always adjust the motor position so that V-belts can be installed without stretching over grooves. Forcing belts can result in uneven stretching and a mismatched set of belts.
2. Do not allow belt to bottom out in sheave.
3. Tighten belts by turning motor-adjusting jackscrews. Turn each jackscrew an equal number of turns.
4. Equalize belt slack so that it is on the same side of belt for all belts. Failure to do so may result in uneven belt stretching.
5. Tension new drives at the maximum deflection force recommended (see Table 15).

On current production, the correct tension information is listed on the fan drive label. For older equipment or units with field-modified drives, use the deflection formula in the following example and the tension data from Table 15.

EXAMPLE:

Given

Belt Span 16 in.
Belt Cross-Section A, Super Belt
Small Sheave PD 5 in.

$$\text{Deflection} = \frac{(\text{Belt Span})}{64}$$

Solution

a. From Table 7 find that deflection force for a new type A, super belt with 5-in. small sheave PD is 8 lb.

b.

$$\text{Deflection} = \frac{16}{64}$$

TENSION MEASUREMENT PROCEDURE

1. Measure the belt span (see Fig. 57).
2. Position bottom of the large O-ring on the span scale at the measured belt span.
3. Set the small O-ring on the deflection force scale to zero.
4. Place the tension checker squarely on one belt at the center of the belt span. Apply a force on the plunger and perpendicular to the belt span until the bottom of the large O-ring is even with the top of the adjacent (next) belt or with the bottom of a straight edge laid across the outside diameters of the v-belt sheaves.
5. Remove the tension checker and read the force applied from the bottom of the small O-ring on the deflection force scale.
6. Compare the force you have applied with the values given in Table 15. The force should be between the "Used Belt" and "New Belt" values shown. The maximum value is shown for "New Belt" and new belts should be tensioned at this value to allow for expected tension loss. "New Belt" tensions should be used at initial installation and after job start or 1 to 3 minutes of operation. Used belts should be maintained at the value as indicated in the chart. "Used Belt" tensions should be used for the 8-hour and subsequent checks. If the belt span was measured in centimeters, then use the kilograms of force values for comparison.

NOTE: The ratio of deflection to belt span is 1:64 in either unit of measurement.

Whenever possible, jog start for a few revolutions or preferably run drive for approximately 1 to 3 minutes and then re-tension in accordance with Steps 1-6. Running the drive for a few revolutions or minutes will help seat the belt(s) in the groove(s). This relatively early re-tensioning may reduce or minimize the amount of re-tensioning required in the first 24 hours of drive service. Record information on the label (see Fig. 58) found on the door of the fan section.

For additional motor and drive package data see Table 16.

Table 15 — Fan Belt Tension Data

BELT STYLE	SMALLEST SHEAVE DIAMETER RANGE (in.)	RPM RANGE	BELT DEFLECTION FORCE (lb)			
			Super Gripbelts and Unnotched Gripbands		Gripnotch Belts and Notched Gripbands	
			Used Belt	New Belt	Used Belt	New Belt
A, AX	3.0 - 3.6	1000-2500 2501-4000	3.7 2.8	5.5 4.2	4.1 3.4	6.1 5.0
	3.8 - 4.8	1000-2500 2501-4000	4.5 3.8	6.8 5.7	5.0 4.3	7.4 6.4
	5.0 - 7.0	1000-2500 2501-4000	5.4 4.7	8.0 7.0	5.7 5.1	8.4 7.6
B, BX	3.4 - 4.2	860-2500 2501-4000	— —	— —	4.9 4.2	7.2 6.2
	4.4 - 5.6	860-2500 2501-4000	5.3 4.5	7.9 6.7	7.1 6.1	10.5 9.1
	5.8 - 8.6	860-2500 2501-4000	6.3 6.0	9.4 8.9	8.5 7.3	12.6 10.9
C, CX	7.0 - 9.0	500-1740 1741-3000	11.5 9.4	17.0 13.8	14.7 11.9	21.8 17.5
	9.5 - 16.0	500-1740 1741-3000	14.1 12.5	21.0 18.5	15.9 14.6	23.5 21.6
D	12.0 - 16.0	200-850 851-1500	24.9 21.2	37.0 31.3	— —	— —
	18.0 - 20.0	200-850 851-1500	30.4 25.6	45.2 38.0	— —	— —
3V, 3VX	2.2 - 2.4	1000-2500 2501-4000	— —	— —	3.3 2.9	4.9 4.3
	2.65 - 3.65	1000-2500 2501-4000	3.6 3.0	5.1 4.4	4.2 3.8	6.2 5.6
	4.12 - 6.90	1000-2500 2501-4000	4.9 4.4	7.3 6.6	5.3 4.9	7.9 7.3
5V, 5VX	4.4 - 6.7	500-1749 1750-3000 3001-4000	— — —	— — —	10.2 8.8 5.6	15.2 13.2 8.5
	7.1 - 10.9	500-1749 1750-3000 3001-4000	12.7 11.2	18.9 16.7	14.8 13.7	22.1 20.1
	11.8 - 16.0	500-1749 1750-3000 3001-4000	15.5 14.6	23.4 21.8	17.1 16.8	25.5 25.0
8V	12.5 - 17.0	200-850 851-1500	33.0 26.8	49.3 39.9	— —	— —
	18.0 - 22.4	200-850 851-1500	39.6 35.3	59.2 52.7	— —	— —

Table 16 — Motor and Drive Package Data[a]

39L UNIT SIZE	HP REF	MOTOR FRAME	FAN SHAFT DIAM. (in.)	CENTER LINE DISTANCE (in.)		MAX WIDTH SHEAVE (in.)		RPM RANGE		DRIVE AVAILABILITY			
										ODP		TEFC	
				Max	Min	ODP	TEFC	Max	Min	Fix	Var	Fix	Var
03	1/2[b]	56	3/4	6.8	5.5	3.8	3.8	1745	993	—	X	—	X
	3/4[b]	56		6.8	5.5	3.8	3.8	1934	1045	—	X	—	X
	1	143T		6.8	5.5	3.8	3.8	2143	1158	—	X	—	X
	1-1/2	145T		6.8	5.5	3.8	3.8	2375	1283	—	X	—	X
	2	145T		6.8	5.5	3.8	3.8	2500	1422	—	X	—	X
06	3/4[b]	56	1-3/16	9.25	8.25	5.0	5.0	1137	836	—	X	—	X
	1	143T		9.25	8.25	5.0	5.0	1260	836	—	X	—	X
	1-1/2	145T		9.25	8.25	5.0	5.0	1397	880	—	X	—	X
	2	145T		9.25	8.25	5.0	5.0	1548	926	—	X	—	X
	3	182T		8.2	7.0	5.0	5.0	1805	975	—	X	—	X
	5	184T		8.2	7.0	5.0	4.0	2000	1197	—	X	—	X
08	1-1/2	145T	1-3/16	11.25	9.5	5.0	5.0	1327	836	—	X	—	X
	2	145T		11.25	9.5	5.0	5.0	1470	836	—	X	—	X
	3	182T		9.8	8.4	5.0	5.0	1629	926	—	X	—	X
	5	184T		9.8	8.4	5.0	5.0	1900	1026	—	X	—	X
	7-1/2	213T		9.1	7.5	5.0	4.6	2000	1197	—	X	—	X
	10	215T		9.1	7.5	4.5	—	2000	1327	—	X	—	—
10	1-1/2	145T	1-3/16	11.25	9.4	4.9	4.9	1238	668	—	X	—	X
	2	145T		11.25	9.4	4.9	4.9	1372	668	—	X	—	X
	3	182T		9.8	8.3	4.9	4.9	1520	780	—	X	—	X
	5	184T		9.8	8.3	4.9	4.9	1600	820	—	X	—	X
	7-1/2	213T		9.1	7.4	4.9	4.9	1600	957	—	X	—	X
	10	215T		9.1	7.4	4.3	3.4	1600	1061	—	—	X	—
12	1-1/2	145T	1-3/16	11.25	9.4	5.7	5.7	1061	668	—	X	—	X
	2	145T		11.25	9.4	5.7	5.7	1238	668	—	X	—	X
	3	182T		9.8	8.3	5.7	5.7	1444	740	—	X	—	X
	5	184T		9.8	8.3	5.7	5.7	1600	779	—	X	—	X
	7-1/2	213T		9.1	7.4	5.7	5.7	1600	863	—	X	—	X
	10	215T		9.1	7.4	5.7	5.7	1600	1008	—	X	—	X
	15	254T		7.8	6.6	5.3	3.9	1600	1176	X	—	X	—
15	3	182T	1-7/16	13.5	11.4	6.4	6.4	1083	613	—	X	—	X
	5	184T		13.5	11.4	6.4	6.4	1264	613	—	X	—	X
	7-1/2	213T		12.6	10.4	6.4	6.4	1400	716	—	X	—	X
	10	215T		12.6	10.4	6.4	6.4	1400	794	—	X	—	X
	15	254T		11.4	9.4	6.1	5.4	1400	881	—	X	—	X
18	3	182T	1-7/16	15.6	13.3	6.3	6.3	906	514	—	X	—	X
	5	184T		15.6	13.3	6.3	6.3	1058	514	—	X	—	X
	7-1/2	213T		14.7	12.4	6.3	6.3	1235	570	—	X	—	X
	10	215T		14.7	12.4	6.3	6.3	1300	632	—	X	—	X
	15	254T		13.5	11.2	5.7	5.7	1300	738	—	X	—	X
	20	256T		13.5	11.2	4.7	4.7	1300	818	X	—	X	—
21	3	182T	1-7/16	15.6	13.3	6.2	6.2	798	430	—	X	—	X
	5	184T		15.6	13.3	6.2	6.2	1043	523	—	X	—	X
	7-1/2	213T		14.7	12.4	6.2	6.2	1100	579	—	X	—	X
	10	215T		14.7	12.4	6.2	6.2	1100	643	—	X	—	X
	15	254T		13.5	11.2	5.6	5.6	1100	715	—	X	—	X
	20	256T		13.5	11.2	4.5	4.5	1100	798	X	—	X	—
25	5	184T	1-11/16	17.9	16.1	4.8	4.8	729	380	—	X	—	X
	7-1/2	213T		17.6	15.4	4.8	4.8	909	445	—	X	—	X
	10	215T		17.6	15.4	4.8	4.8	959	470	—	X	—	X
	15	254T		17.1	14.4	4.8	4.8	1000	551	—	X	—	X
	20	256T		17.1	14.4	4.8	4.8	1000	617	X	—	X	—
	25	284T		16.1	13.2	4.8	4.8	1000	654	X	—	X	—

NOTE(S):

a. Based on 3-phase, 1800 rpm, 60 Hz motors.
b. Not available with high-efficiency motors.

LEGEND

Fix — Fixed Pitch Drive
ODP — Open Drip Proof
TEFC — Totally Enclosed Fan Cooled
Var — Variable Pitch Drive

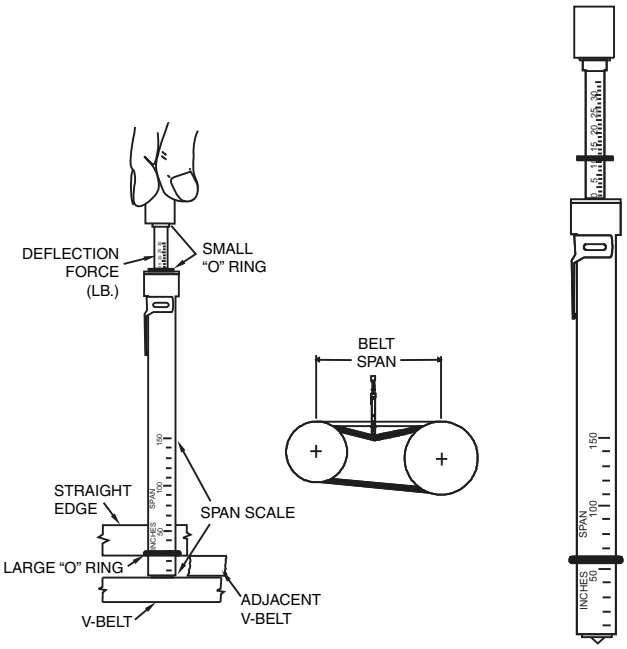

Fig. 57 — Fan Belt Tension

NOTICE

TENSION BELTS TO SPECIFICATION SHOWN ON DRIVE LABEL. OVER TENSIONING BELTS WILL SEVERELY REDUCE BELT AND BEARING LIFE.

REPLACEMENT PARTS

BEARINGS

DRIVE _____

FREE _____

SHAFT _____

WHEEL _____

INLET CONE _____

TO ORDER REPLACEMENT PARTS,
CONTACT: RCD
(REPLACEMENT COMPONENTS DIVISION)
1-800-443-4410

Fig. 58 — Fan Section Label

Water and Steam Coil Piping Recommendations

GENERAL

Use straps around the coil casing or the lifting holes (see Fig. 59) to lift and place the coil.

⚠CAUTION

To prevent damage to the coil or coil headers: Do not use the headers to lift the coil. Support the piping and coil connections independently. Do not use the coil connections to support piping. When tightening coil connections, use a backup wrench on the nozzles.

Piping practices are outlined in the Carrier System Design Manual, Part 3, Piping Design. See Tables 17-19 for circuiting data.

WATER COILS

Typically, coils are piped by connecting the supply at the bottom and the return at the top (see Fig. 59). This is not always the case, especially if the coil hand has been changed in the field. Coils must be piped for counterflow; otherwise, a capacity reduction of 5% for each coil row will result. To ensure counterflow, chilled water coils are piped so that the coldest water meets the coldest air. Hot water coils are piped so that the warmest water meets the warmest air.

STEAM COILS

Position the steam supply connection at the top of the coil, and the return (condensate) connection at the bottom. The coil tubes must incline downwards toward the return header connection for condensate drainage. See Fig. 60-64 and Table 20.

Figure 60 illustrates the normal piping components and the suggested locations for high, medium, or low-pressure steam coils. The low-pressure application (zero to 15 psig) can dispense with the 1/4-in. petcock for continuous venting located above the vacuum breaker (check valve).

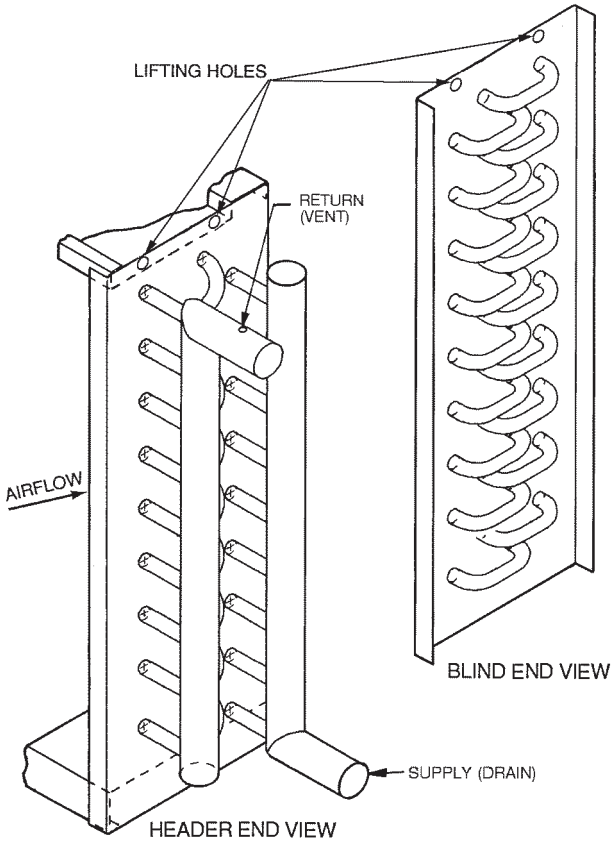

Fig. 59 — Coil Connections and Lifting Points

Note the horizontal location of the 15-degree check valve, and the orientation of the gate/pivot. This valve is intended to relieve any vacuum forming in the condensate outlet of a condensing steam coil, and to seal this port when steam pressure is again supplied to the coil. It must not be installed in any other position, and should not be used in the supply line.

For coils used in tempering service, or to preheat outside air, install an immersion thermostat in the condensate line ahead of the trap. This will shut down the supply fan and close the outdoor damper whenever the condensate falls to a predetermined point, perhaps 120°F.

NOTE: Do NOT use an immersion thermostat to override a duct thermostat and open the steam supply valve.

For vacuum return systems, the vacuum breaking check valve would be piped into the condensate line between the trap and the gate valve instead of open to the atmosphere.

Figure 61 illustrates the typical piping at the end of every steam supply main. Omitting this causes many field problems and failed coils.

Figure 62 shows the typical field piping of multiple coils. Use this only if the coils are the same size and have the same pressure drop. If this is not the case, an individual trap must be provided for each coil.

Figure 63 shows a multiple coil arrangement applied to a gravity return, including the open air relief to the atmosphere, which DOES NOT replace the vacuum breakers.

Figure 64 illustrates the basic condensate lift piping.

Following the piping diagrams in Fig. 60-64, make all connections while observing the following precautions:

- Install a drip line and trap on the pressure side of the inlet control valve. Connect the drip line to the return line downstream of the return line trap.
- To prevent scale or foreign matter from entering the control valve and coil, install a 3/32 in. mesh strainer in the steam supply line upstream from the control valve.
- Provide air vents for the coils to eliminate non-condensible gases.
- Select a control valve according to the steam load, not the coils supply connection size. Do not use an oversized control valve.
- Do not use bushings that reduce the size of the header return connection. The return connection should be the same size as the return line and reduced only at the downstream trap.
- To lift condensate above the coil return line into overhead steam mains, or pressurized mains, install a pump and receiver between the condensate trap and the pressurized main. Do not try to lift condensate with modulating or on-and-off steam control valves. Use only 15-degree check valves, as they open with a lower water head. Do not use 45-degree or vertical-lift check valves.
- Use float and thermostatic traps. Select the trap size according to the pressure difference between the steam supply main and the return main.
- Load variations can be caused by uneven inlet air distribution or temperature stratification.
- Drain condensate out of coils completely at the end of the heating season to prevent the formation of acid.

Table 17 — Hot Water Coil Circuiting Data

39L UNIT SIZE		03	06	08	10	12	15	18	21	25
		No. of Circuits								
1-Row	H	6	8	10	10	10	13	15	15	13
2-Row	H	6	8	10	10	10	13	15	15	13
	F	12	16	20	20	20	26	30	30	36

LEGEND

F — Full Circuit
H — Half Circuit

NOTE: All hot water coils have 1-1/2 in. MPT.

Table 18 — Chilled Water Coil Circuiting Data

LARGE FACE AREA (39LA, 39LD)

COIL TYPE	CIRCUIT	UNIT SIZE									
		03		06		08		10		12	
		Face Area (sq ft)									
		3.63		5.90		7.90		9.54		11.18	
		No. Circuits	Connection Size[b]	No. Circuits	Connection Size[b]	No. Circuits	Connection Size[b]	No. Circuits	Connection Size[b]	No. Circuits	Connection Size[b]
4-Row	Q	4	1-1/2	5	1-1/2	—	—	—	—	—	—
	H	8	1-1/2	10	1-1/2	12	1-1/2	12	1-1/2	12	1-1/2
	F	16	1-1/2	20	1-1/2	24	2-1/2	24	2-1/2	24	2-1/2
	D	—	—	—	—	—	—	—	—	—	—
6-Row	H	8	1-1/2	10	1-1/2	12	1-1/2	12	1-1/2	12	1-1/2
	F	16	1-1/2	20	1-1/2	24	2-1/2	24	2-1/2	24	2-1/2
	D	—	—	—	—	36	2-1/2	36	2-1/2	36	2-1/2

LARGE FACE AREA (39LA, 39LD)

COIL TYPE	CIRCUIT	UNIT SIZE							
		15		18		21[a]		25[a]	
		Face Area (sq ft)							
		14.91		17.71		21.60		25.00	
		No. Circuits	Connection Size[b]	No. Circuits	Connection Size[b]	No. Circuits	Connection Size[b]	No. Circuits	Connection Size[b]
4-Row	Q	—	—	—	—	—	—	—	—
	H	16	1-1/2	19	1-1/2	19	1-1/2	22	1-1/2
	F	32	2-1/2	38	2-1/2	38	2-1/2	44	2-1/2
	D	—	—	—	—	76	2-1/2	88	2-1/2
6-Row	H	16	1-1/2	19	1-1/2	19	1-1/2	—	—
	F	32	2-1/2	38	2-1/2	38	2-1/2	44	2-1/2
	D	48	2-1/2	57	2-1/2	57	2-1/2	66	2-1/2

Table 18 — Chilled Water Coil Circuiting Data (cont)

SMALL FACE AREA (39LB, 39LC, 39LF)

COIL TYPE	CIRCUITING	UNIT SIZE									
		03		06		08		10		12	
		Face Area (sq ft)									
		2.72		4.72		6.58		7.95		9.23	
		No. Circuits	Connection Size[b]	No. Circuits	Connection Size[b]	No. Circuits	Connection Size[b]	No. Circuits	Connection Size[b]	No. Circuits	Connection Size[b]
4-Row	Q	3	1-1/2	4	1-1/2	—	—	—	—	—	—
	H	6	1-1/2	8	1-1/2	10	1-1/2	10	1-1/2	10	1-1/2
	F	12	1-1/2	16	1-1/2	20	2-1/2	20	2-1/2	20	2-1/2
	D	—	—	—	—	—	—	—	—	—	—
6-Row	H	6	1-1/2	8	1-1/2	10	1-1/2	10	1-1/2	10	1-1/2
	F	12	1-1/2	16	1-1/2	20	2-1/2	20	2-1/2	20	2-1/2
	D	—	—	—	—	30	2-1/2	30	2-1/2	30	2-1/2
8-Row[c]	H	6	1-1/2	8	1-1/2	10	1-1/2	10	1-1/2	10	1-1/2
	F	12	1-1/2	16	1-1/2	20	2-1/2	20	2-1/2	20	2-1/2
	D	—	—	—	—	40	2-1/2	40	2-1/2	40	2-1/2

SMALL FACE AREA (39LB, 39LC, 39LF)

COIL TYPE	CIRCUITING	UNIT SIZE							
		15		18		21[a]		25[a]	
		Face Area (sq ft)							
		12.12		13.98		17.10		20.50	
		No. Circuits	Connection Size[b]	No. Circuits	Connection Size[b]	No. Circuits	Connection Size[b]	No. Circuits	Connection Size[b]
4-Row	Q	—	—	—	—	—	—	—	—
	H	13	1-1/2	15	1-1/2	15	1-1/2	18	1-1/2
	F	26	2-1/2	30	2-1/2	30	2-1/2	36	2-1/2
	D	—	—	—	—	60	2-1/2	72	2-1/2
6-Row	H	13	1-1/2	15	1-1/2	15	1-1/2	—	1-1/2
	F	26	2-1/2	30	2-1/2	30	2-1/2	36	2-1/2
	D	39	2-1/2	45	2-1/2	45	2-1/2	54	2-1/2
8-Row[c]	H	13	1-1/2	13	1-1/2	—	1-1/2	—	1-1/2
	F	26	2-1/2	30	2-1/2	30	2-1/2	36	2-1/2
	D	52	2-1/2	60	2-1/2	60	2-1/2	72	2-1/2

NOTE(S):

a. Sizes 21-25 have 2 coils.
b. Connection sizes are MPT - inches.
c. Not available on 39LB units.

LEGEND

D — Double Circuit
F — Full Circuit
H — Half Circuit
Q — Quarter Circuit

Table 19 — Direct Expansion Coil Circuiting Data

LARGE FACE AREA (39LA, 39LD)														
UNIT SIZE	**03**			**06**			**08**			**10**			**12**	
CIRCUITING TYPE	**Qtr**	**Half**	**Full**	**Qtr**	**Half**	**Full**	**Qtr**	**Half**	**Full**	**Qtr**	**Half**	**Full**	**Half**	**Full**
CFM at 550 fpm	1996			3245			4345			5247			6149	
Face area (sq ft)	3.63			5.90			7.90			9.54			11.18	
Tube Face	16			20			24			24			24	
Tube Length (in.)	26.1			34.0			37.9			45.8			53.7	
NUMBER OF CIRCUITS	4	8	16	—	10	20	—	12	24	—	12	24	12	24
Number of TXVs	2	2	2	—	2	2	—	2	2	—	2	2	2	2
Number of Circuits/TXV[b]	2	4	8	—	5	10	—	6	12	—	6	12	6	12
Suction Connections (in. OD)	7/8	1-1/8	1-3/8	—	1-1/8	1-3/8	—	1-1/8	1-5/8	—	1-1/8	1-5/8	1-1/8	1-5/8
Distributor Connections (in. OD)	7/8	7/8	1-1/8	—	7/8	1-1/8	—	7/8	1-5/8	—	7/8	1-5/8	7/8	1-1/8
4-ROW COIL														
Circuit Equivalent Length (ft)	52	26	—	—	32	—	—	34	18	—	40	20	45	23
Face Split	11	11	—	—	11	—	—	13	15	—	13	15	13	15
Row Split	13	15	—	—	16	—	—	18	18	—	18	18	18	18
Distributor Nozzle Size[c]	2	2	—	—	3	—	—	4	4	—	5	5	6	6
6-ROW COIL														
Circuit Equivalent Length (ft)	—	39	20	—	47	24	—	51	26	—	59	30	67	34
Face Split	—	11	11	—	11	13	—	13	15	—	13	15	13	15
Row Split	—	15	16	—	16	18	—	18	21	—	18	21	18	21
Distributor Nozzle Size[c]	—	2	3	—	3	3	—	4	4	—	5	5	6	6

LARGE FACE AREA (39LA, 39LD)												
UNIT SIZE	**15**		**18**		**21**		**25**					
CIRCUITING TYPE	**Half**	**Full**	**Half**	**Full**	**Half**	**Full**	**Half**		**Full**		**Double**	
CFM at 550 fpm	8200		9740		11,880		13,750					
Face Area (sq ft)	14.91		17.71		21.6		25.0					
Tube Face	32		38		38		22U-22L					
Tube Length (in.)	53.7		53.7		65.5		65.5					
Number of Circuits	16	32	19	38	19	38	22		44		88	
							U	L	U	L	U	L
Number of TXVs	2	4[a]	2	4[a]	2	4[a]	2	2	2	2	4	4
Number of Circuits/TXV[b]	8	8	9-10	9-10	9-10	9-10	5-6	5-6	11	11	11	11
Suction Connections (in. OD)	1-1/8	1-3/8	1-3/8	1-3/8	1-3/8	1-1/8	1-1/8	1-1/8	1-5/8	1-5/8	1-5/8	1-5/8
Distributor Connections (in. OD)	1-1/8	1-1/8	1-1/8	1-1/8	1-1/8	1-1/8	7/8	7/8	1-3/8	1-3/8	1-3/8	1-3/8
4-ROW COIL												
Circuit Equivalent Length (ft)	45	23	45	23	54	26	54	54	26	26	—	—
Face Split	15	16	16	16	16	16-3/4	12	12	15	15	—	—
Row Split	26	16	28	16	28	16-3/4	21	21	23	23	—	—
Distributor Nozzle Size[c]	8	4	10	5	10	5	8	8	5	5	—	—
6-ROW COIL												
Circuit Equivalent Length (ft)	67	34	67	34	81	40	—	—	40	40	—	—
Face Split	15	16	16	18	16	18-1/2	—	—	15	15	—	—
Row Split	23	16	28	18	28	18-1/2	—	—	22	22	—	—
Distributor Nozzle Size[c]	8	4	10	5	10	5	—	—	5	5	—	—

Table 19 — Direct Expansion Coil Circuiting Data (cont)

SMALL FACE AREA (39LB, 39LC, 39LF)														
UNIT SIZE	**03**			**06**			**08**			**10**			**12**	
CIRCUITING TYPE	**Qtr**	**Half**	**Full**	**Qtr**	**Half**	**Full**	**Qtr**	**Half**	**Full**	**Qtr**	**Half**	**Full**	**Half**	**Full**
CFM at 550 fpm		1496			2596			3619			4372		5126	
Face Area (sq ft)		2.72			4.72			6.58			7.95		9.32	
Tube Face		12			16			20			20		20	
Tube Length (in.)		26.1			34.0			37.9			45.8		53.7	
Number of Circuits	4	6	—	4	8	16	—	10	20	—	10	20	10	20
Number of TXVs	2	2	—	2	2	2	—	2	2	—	2	2	2	2
Number of Circuits/TXV[b]	2	3	—	2	4	8	—	5	10	—	5	10	5	10
Suction Connections (in. OD)	7/8	1-1/8	—	7/8	1-1/8	1-3/8	—	1-1/8	1-3/8	—	1-1/8	1-3/8	1-1/8	1-3/8
Distributor Connections (in. OD)	7/8	7/8	—	7/8	7/8	1-1/8	—	7/8	7/8	—	7/8	7/8	7/8	7/8
4-ROW COIL														
Circuit Equivalent Length (ft)	52	26	—	62	32	—	—	34	18	—	40	20	45	23
Face Split	11	11	—	11	11	—	—	11	18	—	11	18	11	18
Row Split	11	11	—	11	15	—	—	16	18	—	16	18	16	18
Distributor Nozzle Size[c]	1-1/2	1-1/2	—	2-1/2	2-1/2	—	—	4	4	—	5	5	5	5
6-ROW COIL														
Circuit Equivalent Length (ft)	58	39	—	—	47	24	—	51	26	—	59	30	67	34
Face Split	11-1/2	11-1/2	—	—	11-1/2	11-1/2	—	11-1/2	13	—	11-1/2	13	11-1/2	13
Row Split	11-1/2	13	—	—	15	16	—	16	18-1/2	—	16	18-1/2	16	18-1/2
Distributor Nozzle Size[c]	1-1/2	1-1/2	—	—	2-1/2	3	—	4	4	—	5	5	5	5
8-ROW COIL[d]														
Circuit Equivalent Length (ft)	—	52	—	—	63	32	—	68	34	—	78	39	89	45
Face Split	—	11-1/2	—	—	11-1/2	11-1/2	—	11-1/2	13	—	11-1/2	13	11-1/2	13
Row Split	—	13	—	—	15	16	—	16	18-1/2	—	16	18-1/2	16	—
Distributor Nozzle Size[c]	—	1-1/2	—	—	2-1/2	3	—	4	4	—	5	5	5	5

SMALL FACE AREA (39LB, 39LC, 39LF)									
UNIT SIZE	**15**		**18**		**21**		**25**		
CIRCUITING TYPE	**Half**	**Full**	**Half**	**Full**	**Half**	**Full**	**Half**	**Full**	**Double**
CFM at 550 fpm	6666		7689		9405		11,275		
Face Area (sq ft)	12.12		13.98		17.1		20.5		
Tube Face	26		30		30		36		
Tube Length (in.)	53.7		53.7		65.5		65.5		
Number of Circuits	16	26	15	30	15	30	18	36	72
Number of TXVs	2	4[a]	2	4[a]	2	4[a]	2	4[a]	4[a]
Number of Circuits/TXV[b]	6-7	6-7	7-8	7-8	7-8	7-8	9	9	18
Suction Connections (in. OD)	1-3/8	1-3/8	1-3/8	1-3/8	1-3/8	1-3/8	1-3/8	1-3/8	1-5/8
Distributor Connections (in. OD)	7/8	7/8	7/8-1-1/8	7/8-1-1/8	7/8-1-1/8	7/8-1-1/8	1-1/8	1-1/8	1-3/8
4-ROW COIL									
Circuit Equivalent Length (ft)	45	23	45	23	54	26	54	26	—
Face Split	13	16	13	16	13/15	16	16	15	—
Row Split	21	16	23	16	23-1/2	16	26	15	—
Distributor Nozzle Size[c]	6	3	8	4	8	4	8	4	—
6-ROW COIL									
Circuit Equivalent Length (ft)	67	34	67	34	81	40	—	40	—
Face Split	13	16	13	16	13/15	16	—	16-3/4	—
Row Split	21	16	23-1/2	16	23-1/2	16	—	16-3/4	—
Distributor Nozzle Size[c]	6	3	8	4	8	4	—	4	—
8-ROW COIL									
Circuit Equivalent Length (ft)	89	45	89	45	—	54	—	54	26
Face Split	13	16	15	16	—	16	—	16-3/4	16
Row Split	21	16	23-1/2	16	—	16	—	16-3/4	16
Distributor Nozzle Size[c]	6	3	8	4	—	4	—	4	8

NOTE(S):

a. May be field manifolded for either face split or row split.
b. Where each TXV has the same number of circuits, that number is shown once. When coil has an uneven number of circuits per TXV, both values are shown.
c. Factory-supplied distributors have factory-selected nozzle sizes shown. If necessary, replace factory-supplied nozzles with field-supplied and installed nozzles. Consult Electronic Catalog AHU selection program for correct nozzle selection.
d. Not available on 39LB units.

LEGEND

AHU — Air-Handling Unit Selection Program
TXV — Thermostatic Expansion Valve (Field-supplied)

Table 20 — Steam Coil Connection Sizes

39L UNIT SIZE	FACE AREA	COIL TYPE	CIRCUITING	CONNECTION[b]	CONNECTION SIZE
03-25	Small	1-Row	Full Circuit	Inlet	2-1/2
				Outlet	1-1/2

Coil Freeze-Up Protection

WATER COILS

If a chilled water coil is applied with outside air, provisions must be made to prevent coil freeze-up. Install a coil freeze-up thermostat to shut down the system if any air temperature below 36°F is encountered entering the water coil. Follow thermostat manufacturer's instructions.

When a water coil is applied downstream of a direct-expansion (DX) coil, a freeze-up thermostat must be installed between the DX and water coil and electrically interlocked to turn off the cooling to prevent freeze-up of the water coil.

For outdoor-air application where intermittent chilled water coil operation is possible, one of the following steps should be taken:

- Install an auxiliary blower heater in cabinet to maintain above-freezing temperature around coil while unit is shut down.
- Drain coils and fill with an ethylene glycol solution suitable for the expected cold weather operation. Shut down the system and drain coils. See Service section, Winter Shutdown, page 63.

STEAM COILS

When used for preheating outdoor air in pressure or vacuum systems, an immersion thermostat to control outdoor-air damper and fan motor is recommended. This control is actuated when steam supply fails or condensate temperature drops below an established level, such as 120 to 150°F. A vacuum breaker should also be used to equalize coil pressure with the atmosphere when steam supply throttles close. Steam should not be modulated when outdoor air is below 40°F.

On low-pressure and vacuum steam-heating systems, the thermostat may be replaced by a condensate drain with a thermal element. This element opens and drains the coil when condensate temperature drops below 165°F. Note that condensate drains are limited to 5 psig pressure.

INNER DISTRIBUTING TUBE STEAM COILS

The inner distributing tube (IDT) steam coil used in the Carrier 39L air-handling units has an inner tube pierced to facilitate the distribution of the steam along the tube's length. The outer tubes are expanded into plate fins. The completed assembly includes the supply and condensate header and side casings which are built to slant the fin/tube bundle back toward the condensate header. The slanting of the assembly ensures that condensate will flow toward the drains. This condensate must be removed through the return piping to prevent premature failure of the coil. The fin/tube bundle is slanted vertically for horizontal airflow coils, and horizontally for vertical air-flow coils.

IDT STEAM COIL PIPING

The following piping guidelines will contribute to efficient coil operation and long coil life:

1. Use full size coil outlets and return piping to the steam trap. Do not bush return outlet to the coil. Run full size to the trap, reduce at the trap.
2. Use float and thermostatic traps only for condensate removal. Trap size selection should be based on the difference in pressure between the steam supply main and the condensate return main. It is good practice to select a trap with 3 times the condensate rating of the coil to which it is connected.
3. Use thermostatic traps for venting only.
4. Use only 1/2-in., 15-degree swing check valves installed horizontally, piped open to atmosphere, and located at least 12 in. above the condensate outlet. Do not use 45-degree, vertical lift and ring check valves.
5. The supply valve must be sized for the maximum anticipated steam load.
6. Do not drip steam mains into coil sections. Drip them on the pressure side of the control valve and trap them into the return main beyond the trap for the coil.
7. Do not use a single trap for two or more coils installed in series. Where two or more coils are installed in a single bank, in parallel, the use of a single trap is permissible, but only if the load on each coil is equal. Where loads in the same coil bank vary, best practice is to use a separate trap for each coil.
8. Variation in load on different coils in the same bank may be caused by several factors. Two of the most common are uneven airflow distribution across the coil and stratification of inlet air across the coil.
9. Do not try to lift condensate above the coil return into an overhead main, or drain into a main under pressure with a modulating or on/off steam control valves. A pump and receiver should be installed between the coil condensate traps and overhead mains and return mains under pressure.
10. Use a strainer (3/32 in. mesh) on the steam supply side, as shown in the piping diagrams, to avoid collection of scale or other foreign matter in the inner tube distributing orifices.

NOTE: IDT coils must be installed with the tubes draining toward the header end of the coil. Carrier's IDT steam coils are pitched toward the header end as installed in the unit.

1. Ensure the AHU (air-handling unit) is installed level to maintain the inherent slope. Also ensure the unit is installed high enough to allow the piping to be installed correctly, especially the traps which require long drip legs.
2. Do not fail to provide all coils with the proper air vents to eliminate non-condensible gases.
3. Do not support steam piping from the coil units. Both mains and coil sections should be supported separately.

IDT Steam Coil Installation

Refer to drawings to position the coils properly with regard to the location of the supply and return connections. Ensure that the IDT coil is pitched with the tubes draining toward the header. Carrier's AHUs provide proper coil pitch when the AHU is installed level.

Refer to schematic piping diagrams and piping connection notes for the recommended piping methods.

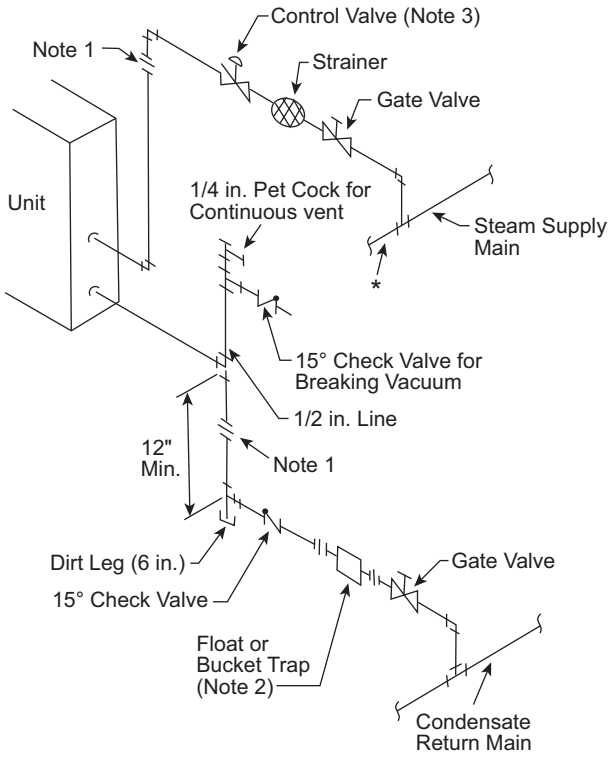

* When end of supply main, see Fig. 61.

NOTE(S):
1. Flange or union is located to facilitate coil removal.
2. Flash trap may be used if pressure differential between steam and condensate return exceeds 5 psi.
3. When a bypass with control is required.
4. Dirt leg may be replaced with a strainer. If so, tee on drop can be replaced by a reducing ell.
5. The petcock is not necessary with a bucket trap or any trap which has provision for passing air. The great majority of high or medium pressure returns end in hot wells or deaerators which vent the air.

Fig. 60 — Low, Medium or High Pressure Coil Piping

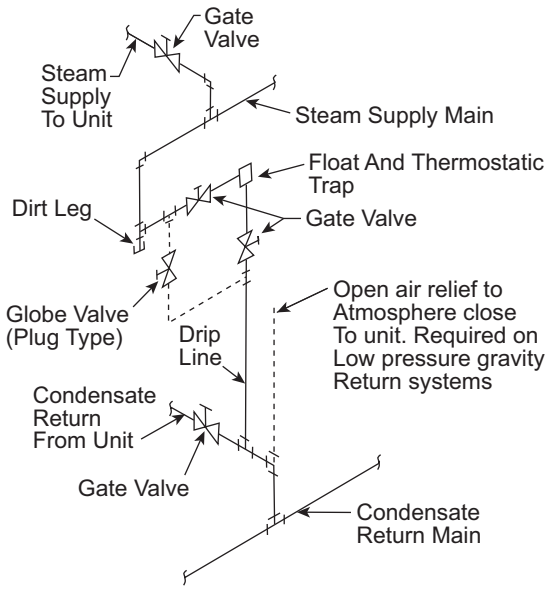

NOTE(S):
1. A bypass is necessary around trap and valves when continuous operation is necessary.
2. Bypass to be the same size as trap orifice but never less than 1/2 inch.

Fig. 61 — Dripping Steam Supply to Condensate Return

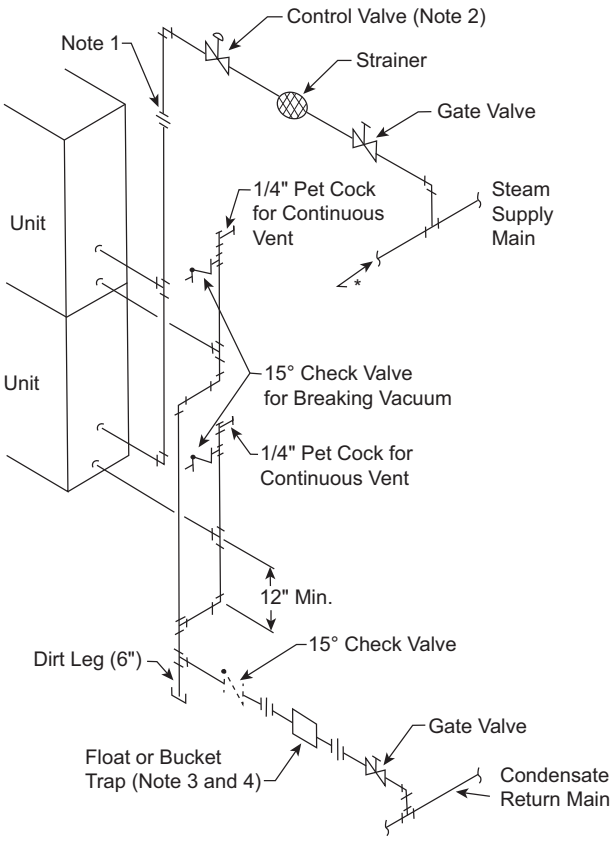

* When dripping steam supply main to condensate return, see Fig. 61.

NOTE(S):
1. Flange or union is located to facilitate coil removal.
2. When a bypass with control is required.
3. Flash trap can be used if pressure differential between supply and condensate return exceeds 5 psi.
4. Coils with different pressure drops require individual traps. This is often caused by varying air velocities across the coil bank.
5. Dirt leg may be replaced with a strainer. If so, tee on drop can be replaced by a reducing ell.
6. The petcock is not necessary with a bucket trap or any trap which has provision for passing air. The great majority of high pressure return mains terminate in hot wells or deaerators which vent the air.

Fig. 62 — Multiple Coil High Pressure Piping

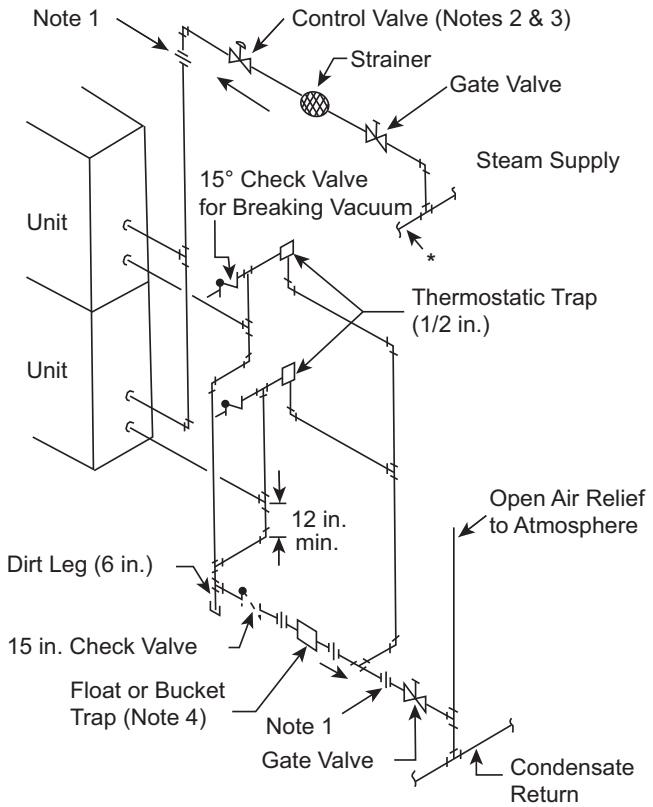

* When end of supply main, see Fig. 61.

NOTE(S):
1. Flange or union is located to facilitate coil removal.
2. When control valve is omitted on multiple coils in parallel air flow.
3. When a bypass with control is required.
4. Coils with different pressure drops require individual traps. This is often caused by varying air velocities across the coil bank.

Fig. 63 — Multiple Coil Low Pressure Piping Gravity Return

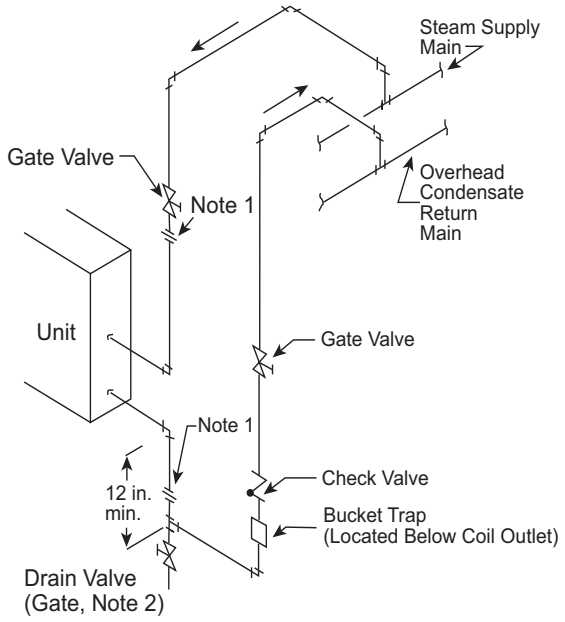

NOTE(S):
1. Flange or union is located to facilitate coil removal.
2. To prevent water hammer, drain coil before admitting steam.
3. Do not exceed one foot of lift between trap discharge and return main for each pound of pressure differential.
4. Do not use this arrangement for units handling outside air.

Fig. 64 — Condensate Lift to Overhead Return

Refrigerant Piping, Direct-Expansion (DX) Coils

NOTE: For units that utilize R-454B or R-32, Installation of pipe-work must be kept to a minimum, and that the pipe-work shall be protected from physical damage. The following must be adhered to:

1. Connecting joints shall only be made in easily accessible locations for service purposes.
2. There shall be no bends in pipe-work lines with a centerline bend radius less than 2.5 times the external diameter.
3. Be protected from potential damage during normal operation, service or maintenance.

Direct-expansion coils are divided into 2 or 4 splits depending upon the unit size and coil circuiting. See Tables 17-19 for coil circuiting data. Each split requires its own distributor nozzle, expansion valve, and suction piping. Suction connections are on the air entering side when the coil is properly installed. Matching distributor connections for each coil split are on the air leaving side. See unit label or certified drawing to assure connection to matching suction and liquid connections. See Table 21 for distributor part numbers.

⚠CAUTION

Direct-expansion coils are shipped pressurized with dry air. Release pressure from each coil split through valves in protective caps before removing caps.

Do not leave piping open to the atmosphere unnecessarily. Water and water vapor are detrimental to the refrigerant system. Until the piping is complete, recap the system and charge with nitrogen at the end of each workday. Clean all piping connections before soldering joints.

The lower split of face split coils should be *first on, last off.*

Row split coils utilize special intertwined circuits (as shown in Fig. 65); either split of these row split coils can be *first on, last off.*

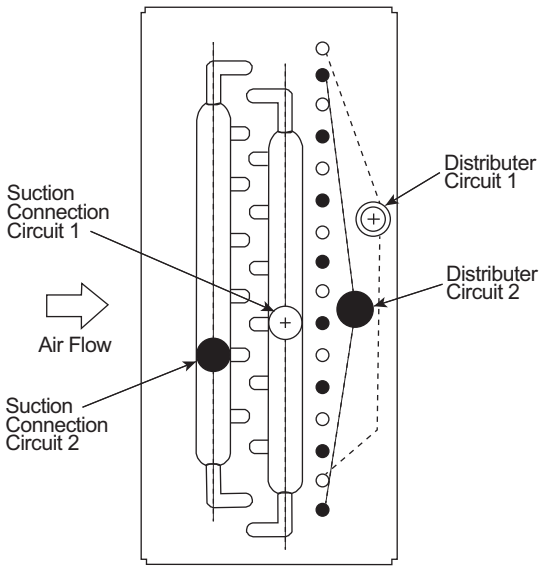

Fig. 65 — Typical Direct-Expansion Row Split Coil

SUCTION PIPING

Connect suction piping as shown in Fig. 66 for face split coil or Fig. 67 for row split coil.

Suction line from coil connection to end of the 15-diameter-long riser should be same tube size as coil connection to ensure proper refrigerant velocity.

Refer to Carrier System Design Manual, Part 3, and size remaining suction line to compressor for a pressure drop equivalent to 2.0°F. This will provide a total suction line header pressure drop equivalent to approximately 2.5°F. Refer to Fig. 68 for piping risers to the compressor.

To minimize the possibility of flooded starts and compressor damage during prolonged light load operation, install an accumulator in the suction line or a solenoid in the liquid line of *last-on, first off* split in row-split applications.

EXPANSION VALVE PIPING

Distributor nozzles sized for acceptable performance for a range of conditions are factory supplied. Use the AHU (Air-Handling Unit) selection program in the Carrier electronic catalog to select optimal nozzle sizes. Replace factory nozzle as necessary for best performance. See Fig. 69.

Thermostatic expansion valves are field supplied.

NOTE: Be sure that correct nozzle is installed in each distributor before installing expansion valve. Before installing field-supplied nozzles, remove nozzle retainer rings and factory-installed minimum-sized nozzles from distributors.

Install expansion valve (Fig. 69) as follows:

1. Wrap wet cloths around valve body to prevent excessive heat from reaching diaphragm and internal parts. *Do not allow water to enter system.* Disassemble expansion valve before soldering, if accessible, for easy reassembly. *Use 95-5 tin-antimony soft solder.*
2. Solder expansion valve outlet directly to distributor unless:
   a. An adapter bushing or coupling is supplied by the factory (solder adapter to distributor first, then to expansion valve).
   b. Hot gas bypass is required. (See Hot Gas Bypass section, below.)
3. Solder expansion valve equalizer line to suction line and locate control bulb on suction line as in Fig. 66 or 67.
4. Insulate expansion valve body, diaphragm assembly and control bulb area to prevent charge migration and excessive condensation.
5. Install filter drier ahead of expansion valve to ensure satisfactory valve operation.

HOT GAS BYPASS

When low-load operation requires use of hot gas bypass, hot gas must be introduced between expansion valve and distributor. See Table 22.

Install hot gas bypass connector (Fig. 70 and 71) in coil split that is *first on, last off* as follows:

1. Remove distributor nozzle and retainer ring (area A) from distributor and reinstall in inlet (area B) of side connector.
2. Solder side connector outlet to distributor inlet, using silver solder or equivalent with 1300 to 1500°F melt temperature.
3. Silver-solder expansion valve outlet to side connector inlet.
4. If required, install factory-supplied adapter bushing or coupling to connector inlet before soldering to expansion valve outlet.

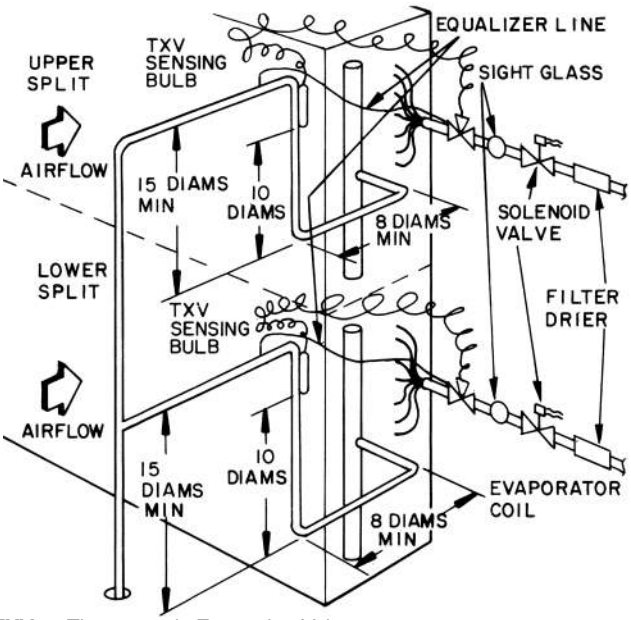

TXV — Thermostatic Expansion Valve

Fig. 66 — Face Split Coil Suction Line Piping

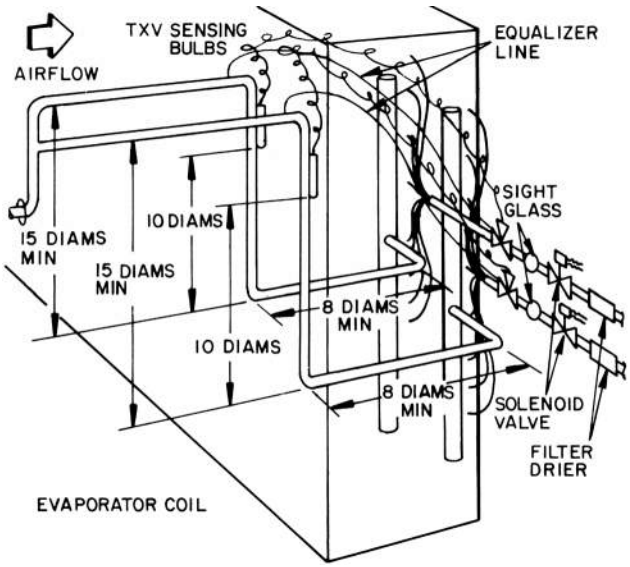

TXV — Thermostatic Expansion Valve

Fig. 67 — Row Split Coil Suction Line Piping

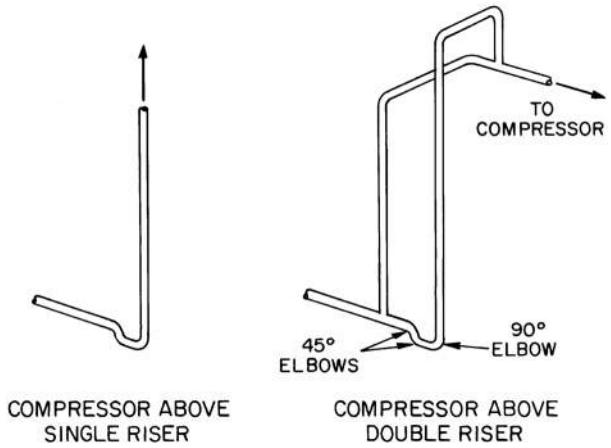

Fig. 68 — Suction Line Riser Piping

Table 21 — Distributor Part Numbers

PART NO.		NO. OF TUBES	CONNECTION OD (in.)	SPORLAN NOZZLE	
Sporlan	Carrier			Type	Size
1112-2-1/4	EA07NC261	2	0.88	G	3/4 to 12
1112-3-1/4	EA07FC027	3			
1112-4-1/4	EA07NC262	4			
1112-5-1/4	EA07NC263	5			
1112-6-1/4	EA07NC264	6			
1113-7-1/4	EA07HC207	7			
1113-8-1/4	EA07HC208	8			
1115-8-1/4	EA07KC240	8	1.12	E	3 to 30
1115-9-1/4	EA07KC241	9			
1115-10-1/4	EA07KC242	10			
1116-11-1/4	EA07HC011	11			
1117-11-1/4	EA07LC510	11	1.38	C	3 to 50
1117-12-1/4	EA07HC012	12			
1117-13-1/4	EA07HC013	13			
1126-14-1/4	EA07TC290	14			
1126-15-1/4	EA07HC015	15			
1126-16-1/4	EA07TC207	16			
1126-17-1/4	EA07HC017	17			

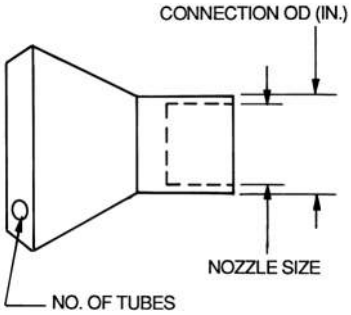

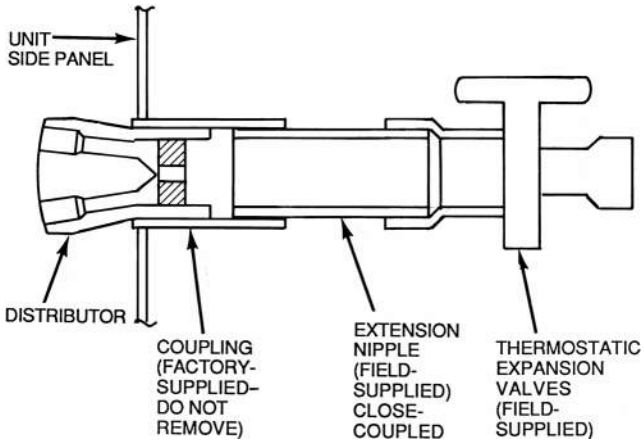

Fig. 69 — Expansion Valve Piping

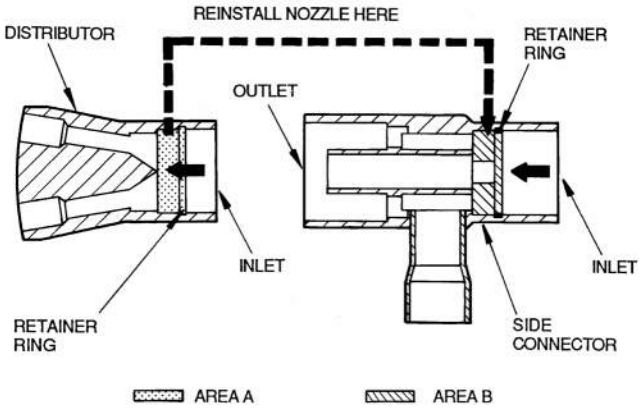

Fig. 70 — Distributor and Hot Gas Bypass Auxiliary Side Connector

Table 22 — Side Connector (Hot Gas Bypass) Data

SPORLAN TYPE	CARRIER PART NO.	CONNECTION SIZES (in.)			USED WITH DISTRIBUTOR TYPE	NOZZLE SIZE
		Inlet — ODM Solder	Outlet — ODF Solder	Auxiliary — ODF Solder		
ASC-5-4	—	5/8	5/8	1/2	1620, 1622	J
ASC-7-4	EA19BA504	7/8	7/8	1/2	1112, 1113	G
ASC-9-5	EA19BA705	1-1/8	1-1/8	5/8	1115, 1116	E
ASC-11-7	EA19BA905	1-3/8	1-3/8	7/8	1117, 1126	C
ASC-13-9	—	1-5/8	1-5/8	1-1/8	1125, 1127, 1143	A

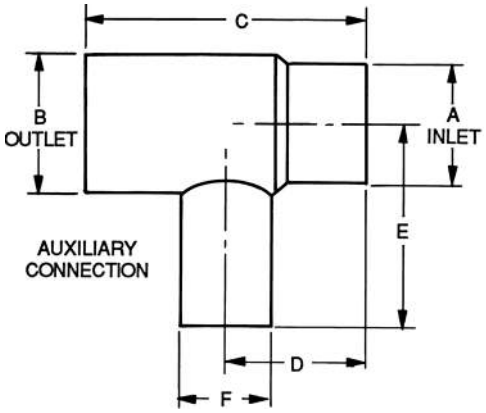

Dimensions (in.)

SPORLAN TYPE	A	B	C	D	E	F
ASC-5-4	5/8 ODM	5/8 ODF	1.88	0.95	1.25	1/2 ODM
ASC-7-4	7/8 ODM	7/8 ODF	2.25	1.06	1.38	1/2 ODM
ASC-9-5	1-1/8 ODM	1-1/8 ODF	2.81	1.47	1.62	1-5/8 ODM
ASC-11-7	1-3/8 ODM	1-3/8 ODF	3.53	1.89	2.19	1-7/8 ODM
ASC-13-9	1-5/8 ODM	1-5/8 ODF	3.72	1.83	2.75	1-1/8 ODM

LEGEND

ODF — Outside Diameter, Female
ODM — Outside Diameter, Male

Fig. 71 — Side Connector (Hot Gas Bypass) Dimensions

UNLOADING CONSIDERATIONS

Direct expansion coils can have two intertwined refrigerant circuits. In addition, quarter, half, full and double circuiting configurations are offered to allow optimum system performance and oil return at full and part-load operation.

Circuiting selection should result in a circuit loading of 0.8 to 2.0 tons per circuit at design load. Circuit loading must be evaluated at minimum load to ensure that it does not drop below 0.6 tons per circuit. Solenoid valves may be used, if necessary, to shut off the refrigerant supply to individual expansion valves to maintain adequate coil circuit loading.

Compressor minimum unloading and TXV quantity is necessary to determine minimum tonnage per circuit.

Minimum Unloading Equation:

$$\frac{\textit{(Tons/Circuit) x (Minimum Unloading) x (Total \# of TXVs)}}{\textit{\# of TXVs Active}}$$

Example:

Condensing Unit:	38ARS012
Minimum Unloading:	33%
Coil:	6 row, 11 FPI, Half Circuit
Coil Tons/Circuit:	1.68
Total TXVs:	2

In the first example we will determine the tons/circuit when both TXVs are active and the compressor is unloaded to its minimum of 33%.

$$= \frac{\textit{(1.68 Tons/Circuit) x (33\% Minimum Unloading) x (2 TXVs)}}{\textit{2 TXVs Active}}$$

$$= \frac{\textit{(1.68) x (.33) x (2)}}{\textit{2}}$$

= 0.55 tons/circuit at minimum unloading UNACCEPTABLE

If we install a liquid line solenoid valve before one of the TXVs and close it so that only one TXV is active when the compressor is unloaded to its minimum of 33%, we see the following:

$$= \frac{\textit{(1.68 Tons/Circuit) x (33\% Minimum Unloading) x (2 TXVs)}}{\textit{1 TXV Active}}$$

$$= \frac{\textit{(1.68) x (.33) x (2)}}{\textit{1}}$$

= 1.10 tons/circuit at minimum unloading ACCEPTABLE

SPECIAL PIPING WITH 4 SPLITS PER COIL

Manifolding for 2-Face Splits

Refer to Fig. 72 and externally manifold as follows:

1. Connect the 4 expansion valves to the 4 distributors on each coil and connect the 4 suction lines to the 15-diameter-long risers as outlined in previous piping instructions.
2. Install common liquid line for upper face split to first (upper) and second expansion valves. Also, install a common suction line from suction lines attached to first (upper) and second suction header connections.
3. Repeat Step 2 for lower face split using third and fourth distributor and suction connections.

Manifolding for 2-Row Splits

Refer to Fig. 73 and externally manifold as outlined for the 2-face splits with the following exceptions:

1. Manifold in pairs, the first and third coil connections for one split.
2. Manifold the second and fourth pairs of coil connections for the other split.

NOTE: Split section using first and third pairs of coil connections should be *first on, last off* for coils with right hand (facing direction of airflow) connections and the reverse for left hand connections.

Hot Gas Bypass Connection with 4 Splits per Coil

For either face or row splits connect a hot gas bypass auxiliary side connector to each distributor of coil split that is *first on, last off.* Refer to installation instructions for hot gas bypass.

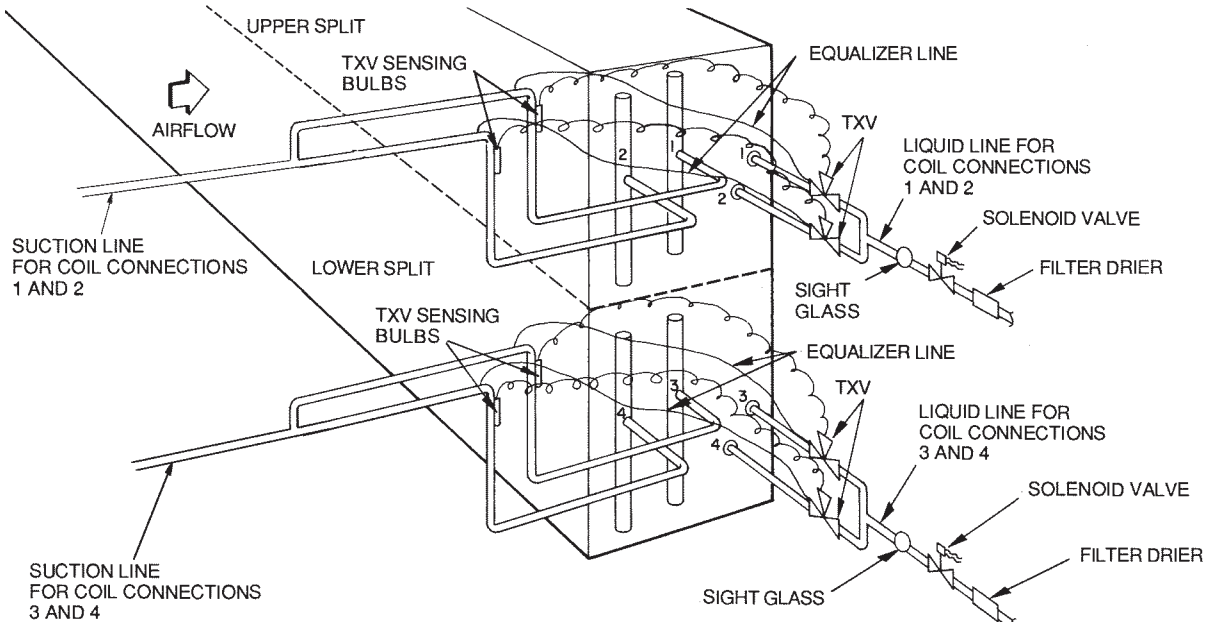

LEGEND

TXV — Thermostatic Expansion Valve

Fig. 72 — Face Split Coil Manifolding (Typical)

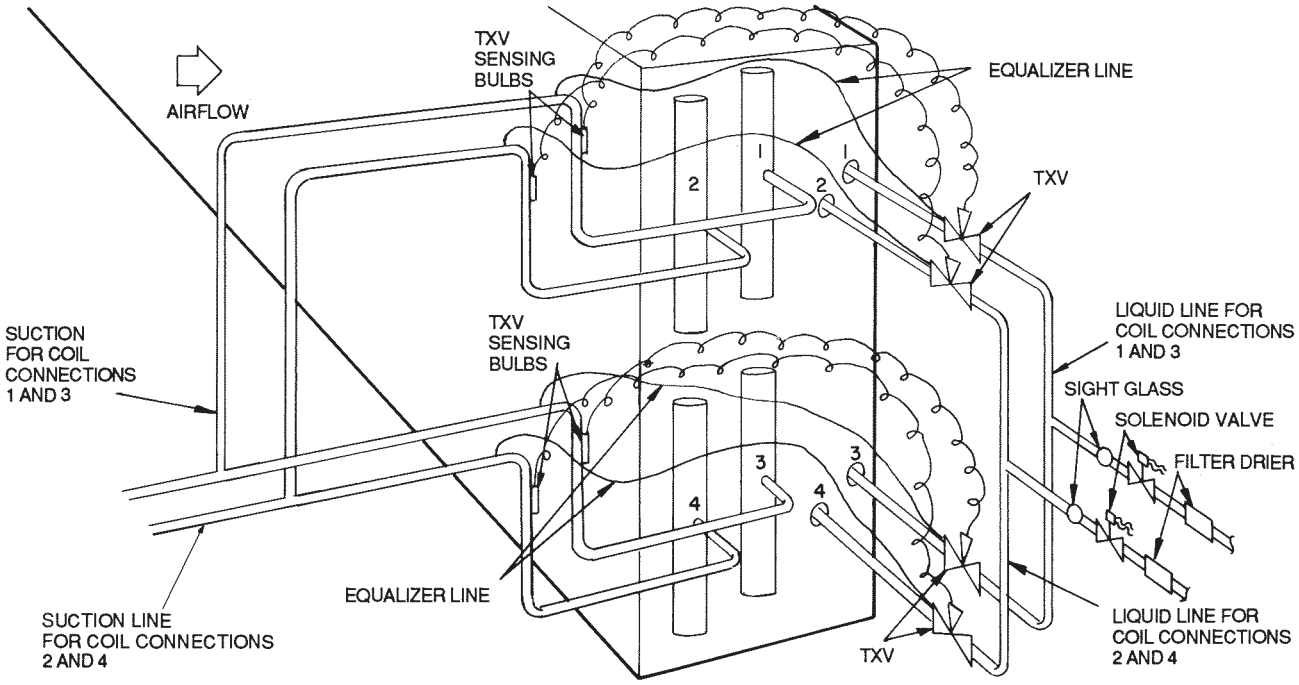

LEGEND

TXV — Thermostatic Expansion Valve

Fig. 73 — Row Split Coil Manifolding (Typical)

Electric Heaters

Electric heaters may be factory installed or drop shipped to the jobsite and field installed. The heater can only be installed in the preheat-electric section.

To install electric heater, refer to Fig. 74 and proceed as follows:

1. Locate preheat-electric section already mounted on unit and remove protective shipping cover.
2. Locate crate containing electric heater and verify heater matches the unit. Unit hand and heater hands must agree.
3. Remove both knockout slugs (power and signal). Install conduit connectors in top of coil connection box.
4. Remove top panel of the preheat-electric section and drill or punch 2 holes are specified in Fig. 74.
5. Insert the electric heater into unit. It must slide between two angles located on the bottom of the section.
6. Secure heater to the preheat-electric section using 4 screws.
7. Locate top panel of section. Run conduit through top panel and tighten conduit connectors. Lower top panel and replace panel on unit.
8. Complete wiring per wiring diagram and job requirements. Follow all applicable local codes.

CONNECT POWER AND CONTROL WIRES

Heater wiring schematic is located on control box panel. (Figure 75 shows typical wiring details.) Electrical data for each standard heater arrangement is shown in Table 20. Verify that minimum airflow requirement (minimum coil face velocity, fpm) will be met, especially on applications where variable air volume is supplied.

Use copper power supply wires rated for 75°C minimum. On 250-v or greater applications, use 600-v rated wiring. Size wires to carry 125% of current load on each set of terminals (Table 25). Use the following formulas as required:

Single-phase line current

$$= \frac{1\ (\text{kW per set of terminals})\ (1000)}{\text{voltage}}$$

Three-phase line current

$$= \frac{(\text{kW per set of terminals})\ (1000)}{(\text{voltage})\ (1.73)}$$

(kW per set of terminals) (1000) = (voltage) (1.73)

Note that if the heater is rated at 50 kW (or more) and is controlled by a cycling device such as a multi-stage thermostat, or a step controller, conductors may be sized at 100% of load amperes (as in Table 25) per National Electrical Code (NEC) Section 424-22. Heater construction and application information (Tables 23-25) are based upon Underwriters' Laboratories (UL) Space Heating Standard No. 1096 and the requirements of the NEC. Installer is responsible for observing local code requirements.

Install a disconnect switch or main circuit breaker in accordance with NEC and other applicable codes. Locate so that it is easily accessible and within sight of heater control box (per NEC Article 424-19 and 424-65).

Weatherproof junction boxes have no knockouts for wire entrance. Drill or punch holes for conduit as required and make all junctions watertight.

Where field-supplied thermostats are used, isolate circuits to prevent possible interconnection of control circuit wiring.

Where field-supplied step controller is used, connect steps to terminals as marked on wiring schematic. When connecting multistage heaters, wire stage no. 1 so that it is first stage on, last stage off. Connect thermostats as required.

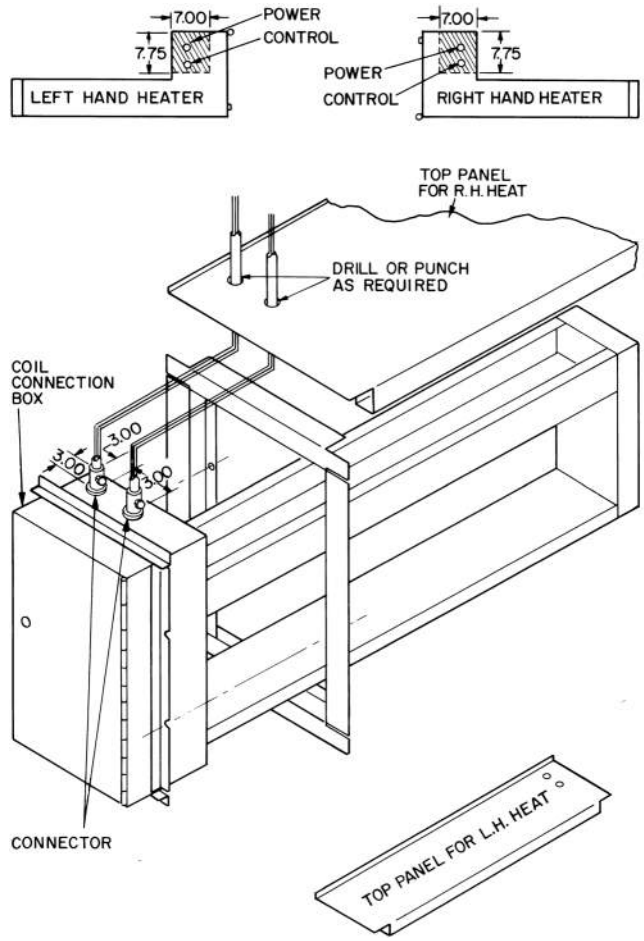

Fig. 74 — Electric Heater Installation

Provide sufficient clearance for convection cooling of heaters with solid-state controllers. Provide at least 5-in. of free air space above and below cooling fins extending from heater terminal box. Be sure to connect interlock terminals F1 and F2 to auxiliary contacts on fan starter.

Each heater has 2 different types of factory-installed thermal cutouts for over-temperature protection; an automatic reset thermal cutout for primary protection and a manual reset thermal cutout to protect against failure of the primary system. Also provided is an airflow pressure differential switch to prevent the heater from operating when the fan is not in operation or airflow is restricted or insufficient. The primary automatic reset cutout is a bi-metal disk-type cutout. It is wired into the control circuit which operates the magnetic disconnecting contactors (the same contactors which also switch on and off the various steps of the coil). The secondary manual reset cutout is a bi-metal disk-type cut-out. This secondary thermal cutout is load carrying and is installed in each heater subcircuit. The primary and secondary over-temperature protection systems are independent of each other. The secondary system is designed to protect against possible failure of the primary system to de-energize the heater.

Subcircuits in the heaters are designed in compliance with paragraph 424-22 of the NEC. The coil is subdivided into circuits that draw no more than 48 amps each and is fused for at least 125% of the circuit rating.

Pilot tube is to be positioned so that the airflow switch is actuated by a minimum negative pressure of 0.07 in. wg.

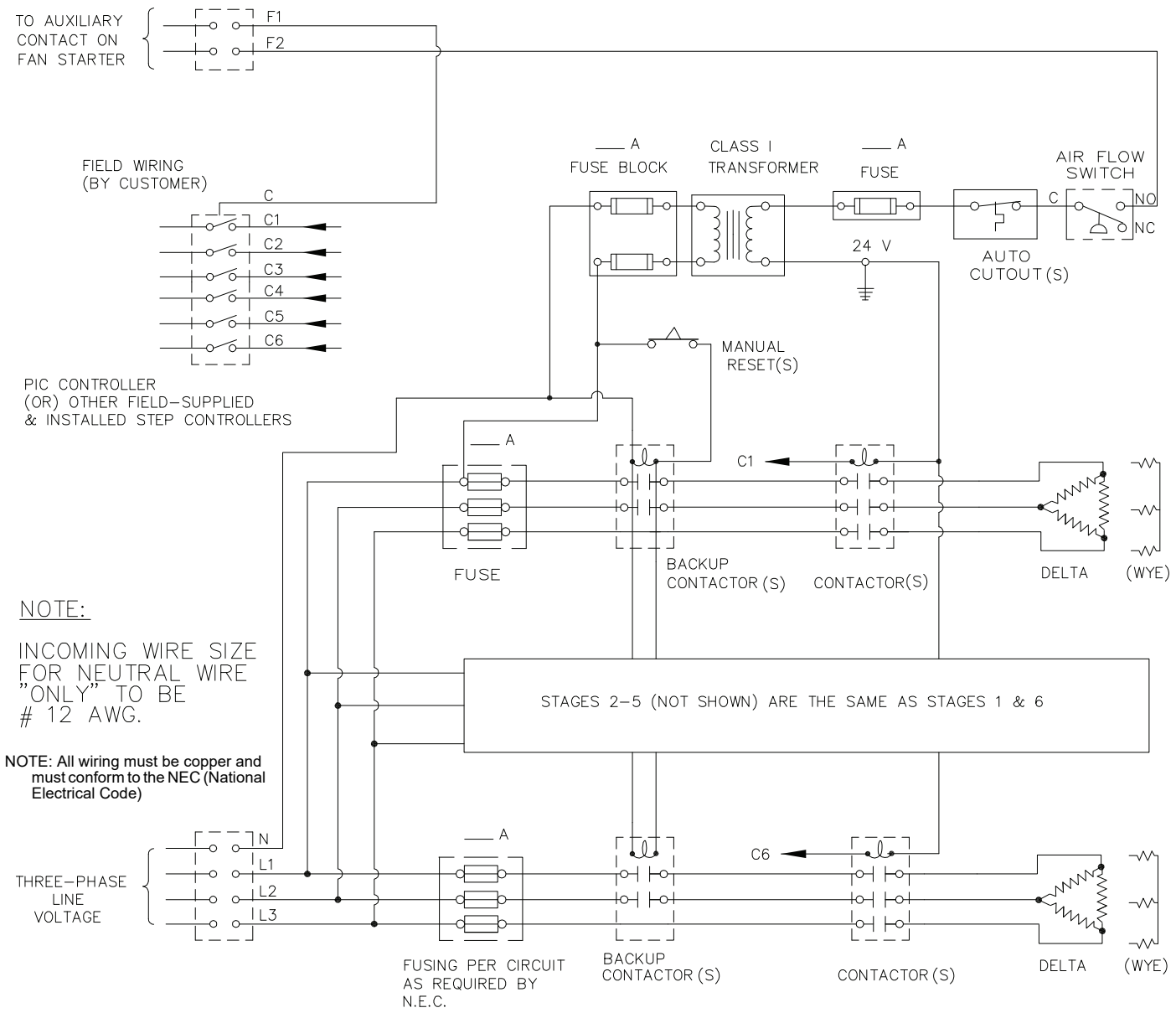

Fig. 75 — Typical Electric Heater Wiring Schematic

Table 23 — Electric Heater Data – 208/230-3-60 and 240-3-60

UNIT SIZE 39L	HEATER AREA (sq ft)	NO. OF CONTROL STEPS[a]	HEATER COIL kW	NOMINAL COIL FACE VELOCITY (fpm)	TEMP RISE (°F)	208-3-60 V-Ph-Hz				240-3-60 V-Ph-Hz			
						Total FLA	MCA[b]	No. Sub-Ckt	MOCP	Total FLA	MCA[b]	No. Sub-Ckt	MOCP
03	2.2	3	9.0	500	26	25	31	1	35	22	27	1	30
			15.0	500	44	42	52	1	60	36	45	1	50
			17.2	500	50	48	60	1	60	41	52	1	60
06	3.7	6	8.0	500	14	22	28	1	30	19	24	1	25
			10.0	500	17	28	35	1	35	24	30	1	35
			17.0	500	29	47	59	1	60	41	51	1	60
			19.9	500	34	55	69	2	70	48	60	1	60
			27.0	500	47	75	94	2	100	65	81	2	90
			29.8	500	51	83	104	2	110	72	90	2	90
			36.0	500	62	100	125	3[c]	150	87	108	2	110
08	5.1	6	15.0	500	19	42	52	1	60	36	45	1	50
			25.0	500	31	69	87	2	90	60	75	2	80
			35.0	500	44	97	122	3	125	84	105	2	110
			39.9	500	50	111	139	3	150	96	120	3	125
			43.2	500	54	120	150	3	175	104	130	3	150
			51.0	500	64	142	177	3	200	123	154	3	175
10	6.2	6	15.0	500	15	42	52	1	60	36	45	1	50
			25.0	500	26	69	87	2	90	60	75	2	80
			39.9	500	41	111	139	3	150	96	120	3	125
			47.3	500	49	131	164	3	175	114	142	3	150
			51.8	500	53	144	180	3	200	125	156	3	175
			59.8	500	62	—	—	—	—	—	—	—	—
12	7.3	6	19.9	500	17	55	69	2	70	48	60	1	60
			29.8	500	26	83	104	2	110	72	90	2	90
			39.9	500	35	111	139	3	150	96	120	3	125
			43.0	500	38	119	149	3	150	104	129	3	150
			51.8	500	45	144	180	3	200	125	156	3	175
			72.0	500	63	—	—	—	—	—	—	—	—
15	10.0	6	19.9	500	13	55	69	2	70	48	60	1	60
			29.8	500	19	83	104	2	110	72	90	2	90
			39.9	500	25	111	139	3	150	96	120	3	125
			45.0	500	29	125	156	3	175	108	135	3	150
			51.8	500	33	144	180	3	200	125	156	3	175
			65.0	500	42	—	—	—	—	—	—	—	—
			86.0	500	55	—	—	—	—	—	—	—	—
18	11.74	6	19.9	500	11	55	69	2	70	48	60	1	60
			25.8	500	14	72	90	2	90	62	78	2	80
			35.0	500	19	97	122	3	125	84	105	2	110
			45.0	500	25	125	156	3	175	108	135	3	150
			51.8	500	28	144	180	3	200	125	156	3	175
			78.0	500	43	—	—	—	—	—	—	—	—
			94.0	500	51	—	—	—	—	—	—	—	—
21	14.21	6	19.9	500	9	55	69	2	70	48	60	1	60
			25.8	500	12	72	90	2	90	62	78	2	80
			35.0	500	16	97	122	3	125	84	105	2	110
			45.0	500	20	125	156	3	175	108	135	3	150
			51.8	500	23	144	180	3	200	125	156	3	175
			79.8	500	36	—	—	—	—	—	—	—	—
			92.0	500	41	—	—	—	—	—	—	—	—
			116.0	500	52	—	—	—	—	—	—	—	—
25	17.79	6	30.0	500	11	83	104	2	110	72	90	2	100
			39.9	500	14	111	139	3	150	96	120	3	125
			50.0	500	18	139	174	3	175	120	151	3	175
			65.0	500	23	181	226	4	250	157	196	4	200
			79.8	500	29	222	277	5	300	192	240	5	250
			96.5	500	35	268	335	6	350	232	291	5	300
			110.0	500	39	—	—	—	—	265	331	6	350
			145.0	500	52	—	—	—	—	—	—	—	—

NOTE(S):

a. Subcircuits are internal heater circuits of 48 amps or less.
b. Electric heat performance is not within the scope of AHRI standard 430 certification.
c. To avoid damage due to overheating, minimum face velocity cannot fall below 350 fpm.

LEGEND

AHRI — Air Conditioning, Heating and Refrigeration Institute
FLA — Full Load Amps
kW — Kilowatts
MCA — Minimum Circuit Amps
MOCP — Maximum Overcurrent Protection

Table 24 — Electric Heater Data – 480-3-60 and 380-3-50

UNIT SIZE 39L	HEATER AREA (sq ft)	NO. OF CONTROL STEPS[a]	HEATER COIL kW	NOMINAL COIL FACE VELOCITY (fpm)	TEMP RISE (°F)	480-3-60 V-Ph-Hz				380-3-50 V-Ph-Hz			
						Total FLA	MCA[b]	No. Sub-Ckt	MOCP	Total FLA	MCA[b]	No. Sub-Ckt	MOCP
03	2.2	3	9.0	500	26	11	14	1	20	14	17	1	20
			15.0	500	44	18	23	1	25	23	29	1	30
			17.2	500	50	21	26	1	30	26	33	1	35
06	3.7	6	8.0	500	14	10	12	1	20	12	15	1	20
			10.0	500	17	12	15	1	20	15	19	1	20
			17.0	500	29	20	26	1	30	26	32	1	35
			19.9	500	34	24	30	1	30	30	38	1	40
			27.0	500	47	33	41	1	45	41	51	1	60
			29.8	500	51	36	45	1[c]	45	45	57	1	60
			36.0	500	62	43	54	1[c]	60	55	68	2[c]	70
08	5.1	6	15.0	500	19	18	23	1	25	23	29	1	30
			25.0	500	31	30	38	1	40	38	48	1	50
			35.0	500	44	42	53	1	60	53	67	2	70
			39.9	500	50	48	60	2	70	61	76	2	80
			43.2	500	54	52	65	2	70	66	82	2	90
			51.0	500	64	61	77	2	80	78	97	2	100
10	6.2	6	15.0	500	15	18	23	1	25	23	29	1	30
			25.0	500	26	30	38	1	40	38	48	1	50
			39.9	500	41	48	60	2	70	61	76	2	80
			47.3	500	49	57	71	2	80	72	90	2	90
			51.8	500	53	62	78	2	80	79	98	2	100
			59.8	500	62	72	90	2	100	91	114	2	125
12	7.3	6	19.9	500	17	24	30	1	30	30	38	1	40
			29.8	500	26	36	45	1	45	45	57	1	60
			39.9	500	35	48	60	2	70	61	76	2	80
			43.0	500	38	52	65	2	70	65	82	2	90
			51.8	500	45	62	78	2	80	79	98	2	100
			72.0	500	63	87	108	2	110	110	137	3[d]	150
15	10.0	6	19.9	500	13	24	30	1	30	30	38	1	40
			29.8	500	19	36	45	1	45	45	57	1	60
			39.9	500	25	48	60	2	70	61	76	2	80
			45.0	500	29	54	68	2	70	68	86	2	90
			51.8	500	33	62	78	2	80	79	98	2	100
			65.0	500	42	78	98	2	100	99	124	3	125
			86.0	500	55	104	129	3	150	131	164	3	175
18	11.74	6	19.9	500	11	24	30	1	30	30	38	1	40
			25.8	500	14	31	39	1	40	39	49	1	50
			35.0	500	19	42	53	1	60	53	67	2	70
			45.0	500	25	54	68	2	70	68	86	2	90
			51.8	500	28	62	78	2	80	79	98	2	100
			78.0	500	43	94	117	2	125	119	148	3	150
			94.0	500	51	113	141	3	150	143	179	3	200
21	14.21	6	19.9	500	9	24	30	1	30	30	38	1	40
			25.8	500	12	31	39	1	40	39	49	1	50
			35.0	500	16	42	53	1	60	53	67	2	70
			45.0	500	20	54	68	2	70	68	86	2	90
			51.8	500	23	62	78	2	80	79	98	2	100
			79.8	500	36	96	120	3	125	121	152	3	175
			92.0	500	41	111	138	3	150	140	175	3	175
			116.0	500	52	140	175	3	175	—	—	—	—
25	17.79	6	30.0	500	11	36	45	1	50	46	57	1	60
			39.9	500	14	48	60	2	70	61	76	2	80
			50.0	500	18	60	75	2	80	76	95	2	100
			65.0	500	23	78	98	2	100	99	124	3	125
			79.8	500	29	96	120	3	125	121	152	3	175
			96.5	500	35	116	145	3	150	147	183	4[e]	200
			110.0	500	39	132	166	3	175	167	209	4[e]	225
			145.0	500	52	175	218	4[e]	225	221	276	5[f]	300

NOTE(S):

a. Standard control steps are listed under the Control Step heading. “Free” additional steps of control are optionally available when the number of subcircuits exceeds the standard number of control steps.
b. MCA = 1.25 x FLA; for proper wire sizing, refer to Table 310-16 of the NEC.
c. 2 control steps in this voltage.
d. 3 control steps in this voltage.
e. 4 control steps in this voltage.
f. 5 control steps in this voltage.

LEGEND

AHRI — Air Conditioning, Heating and Refrigeration Institute
FLA — Full Load Amps
kW — Kilowatts
MCA — Minimum Circuit Amps
MOCP — Maximum Overcurrent Protection

Table 25 — Field Wiring for Incoming Conductors Sized for 125% of Heater Load

WIRE SIZE (AWG or kcmil)	LOAD AMPS[a] Copper	WIRE SIZE (AWG or kcmil)	LOAD AMPS[a] Copper
12	16	**1/0**	120
10	24	**2/0**	140
8	40	**3/0**	160
6	52	**4/0**	184
4	68	**250**	204
3	80	**300**	228
2	92	**350**	248
1	104	**400**	268
		500	304

NOTE(S):

a. Values are based on Table 310-16 of the NEC (National Electrical Code) for 75°C insulated copper wire. Not more than 3 conductors in a raceway.
b. Be sure to consider length of wiring run and possible voltage drops when sizing wires.
c. Field power wiring — Heaters are furnished with a terminal block sized for incoming copper conductors with 75°C insulation rated to carry at least 125% of the heater load. However, conductors can be sized to carry 100% of the heater load if the heater is rated at 50 kW or more, and the heater is controlled by a cycling device such as a multi-stage thermostat, step controller, or SCR (silicon control rectifier) power controller. Terminal blocks and knockouts are sized to handle either 100% or 125% conductors.

LEGEND

AWG — American Wire Gage
kcmil — Thousand Circular Mils

Discharge Modification

If field modification of discharge position is required, 39L fans can be converted (by a skilled mechanic) to any standard hand and discharge without any additional parts.

NOTE: This does not apply to a model change conversion.

All mounting holes are prepunched.

To convert a 39L fan, note the following:

1. Sizes 03-18 — See Fig. 76. It is not necessary to remove the bearing support channels from the fan housing.
2. Sizes 21 and 25 — See Fig. 77. The "A" frame support must be removed. To change from upblast to horizontal discharge or from horizontal to upblast discharge, the bearings must be relocated to keep the wheel centered in the housing. To change from upblast front (UBF) to upblast rear (UBR) or from top horizontal front (THF) to top horizontal rear (THR) or vice versa, turn the entire fan housing 180 degrees about its base.
3. The fan shaft may be driven out and reinstalled to place the drive pulley on the opposite end.
4. The fan scroll is prepunched for horizontal or vertical discharge to match the support angles at the base of the unit.
5. The motor and motor base may be rotated to place the motor at the front or rear of the unit. Proper location is that which results in the longest drive center line distance. The motor conduit box location may need to be reversed.
6. When hand of fan is changed, it may be necessary to turn the discharge panel inside-out to fit correctly with the fan discharge. In this case, remove the existing insulation and install new duct-liner type insulation on the opposite side of the discharge panel.
7. Rebalancing of the unit is recommended.

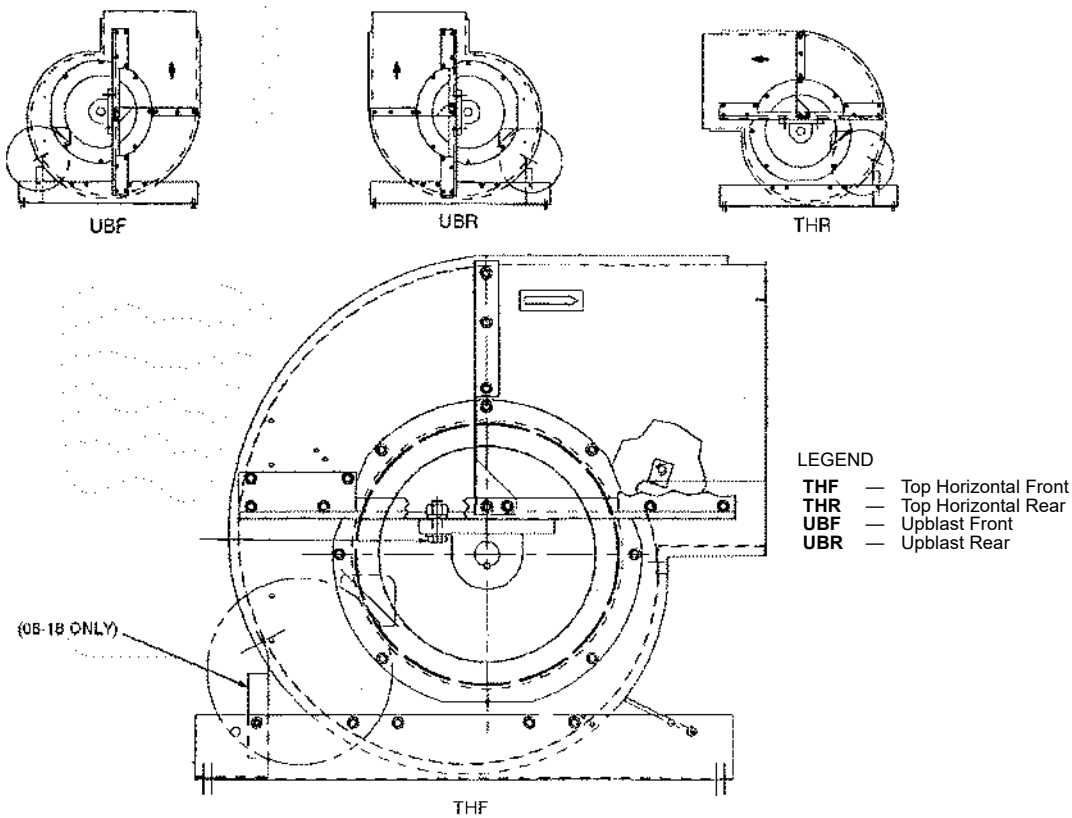

Fig. 76 — Fan Discharge Positions, Sizes 03-18

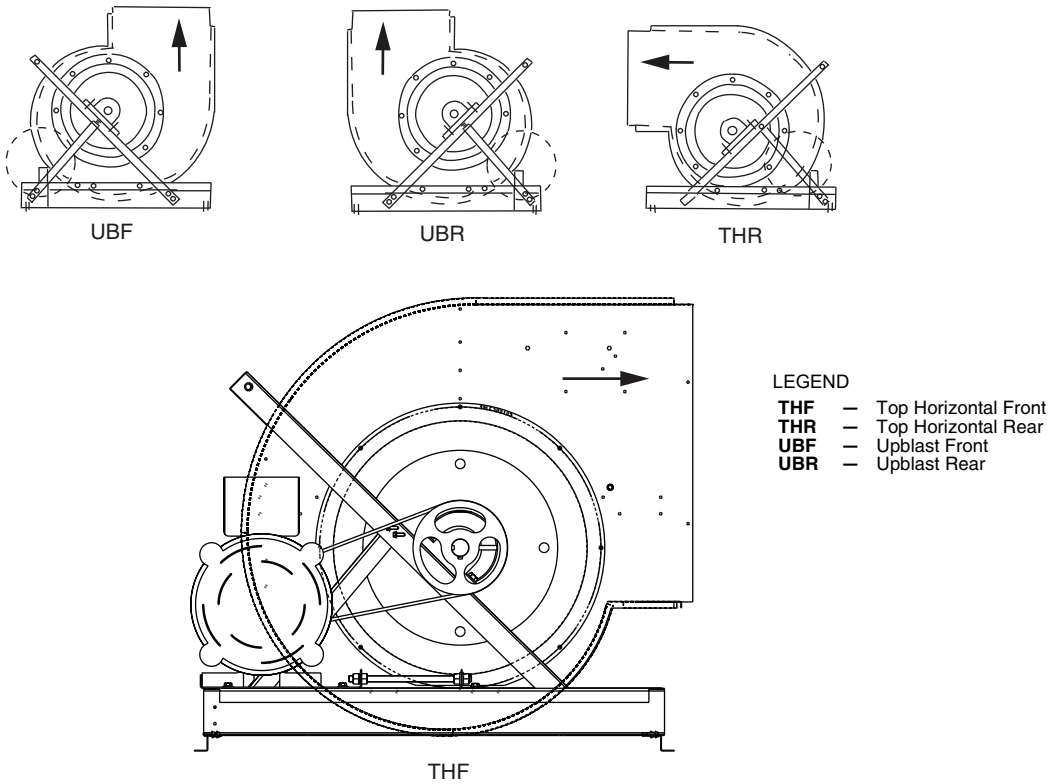

Fig. 77 — Fan Discharge Positions, Sizes 21 and 25

START-UP

Check List

Make a walkway inside unit components to protect insulation. Remove all construction debris from unit interior. *Remove walkway before starting unit.*

FILTERS

Install unit filters in all filter sections.

FANS

1. Check lubrication of fan, motor bearings, and linkages.
   a. Note that bearings are shipped completely full of grease for corrosion protection and may run warm temporarily on start-up until excess grease has discharged.
   b. Hand-operate all linkages, such as damper and guide vanes, to check for freedom of movement.
2. Check tightness of bearing setscrews or locking collars (Fig. 78). Also, check tightness of setscrews on fan wheels and sheaves.
3. Check tightness of fan shaft bearing mounting.
4. Recheck sheave alignment and belt tension. (Refer to Fig. 55 and 56.)
5. Hand turn fan to make certain fan wheel does not rub in housing.
6. Check fan speed with a strobe-type tachometer or use the following formula: Obtain the motor rpm from the fan motor nameplate and read sheave pitch diameters marked on the fan and motor pulleys, or estimate the pitch diameters by using the pulley outside diameters.

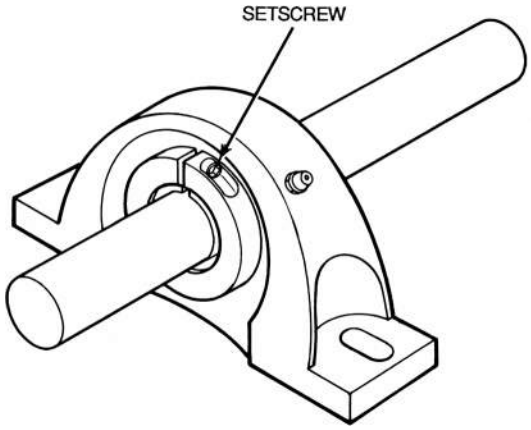

SQUEEZE-TYPE LOCKING COLLAR BEARING SETSCREW TORQUE (in.-lb)

39L UNIT SIZE	TORQUE
03,06,08,10,12	70
15,18,21,25	90

BEARING HOLDDOWN BOLT TORQUE (ft-lb)

BOLT SIZE	TORQUE
3/8-16	30
1/2-13	63
5/8-11	100

Fig. 78 — Fan Shaft Bearing Details

Then:

$$\text{Fan Rpm} = \frac{\text{Motor Rpm x Motor Sheave Pitch Diameter (in.)}}{\text{Fan Sheave Pitch Diameter (in.)}}$$

Example:

		Actual	Approximate
Nameplate Motor Rpm	=	1760	1760
Mtr Sheave Pitch Diameter	=	8.9 in.	9.0 (OD)
Fan Sheave Pitch Diameter	=	12.4 in.	12.5 (OD)
Fan Rpm	=	1760 x 8.9	1760 x 9
	=	12.4	12.5
	=	1263 rpm	1267 rpm

Refer to Table 1, physical data for maximum allowable fan speeds for standard wheels. *Excessive fan speed may result in condensate carryover from cooling coil or fan motor overload and wheel failure.*

1. Check direction of rotation (see Fig. 79). Arrow on drive side of fan housing indicates correct direction of rotation.

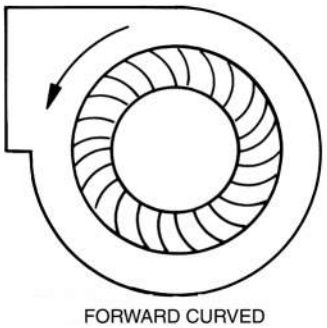

Fig. 79 — Fan Wheel Rotation

2. Check vibration. If excessive vibration occurs, check for the following:
   a. Variable sheave (if air balance of system has been accomplished: replace sheave with fixed sheave for continuous application).
   b. Drive misalignment.
   c. Mismatched, worn or loose belts.
   d. Wheel or sheaves loose on shaft.
   e. Loose bearings.
   f. Loose mounting bolts.
   g. Motor out of balance.
   h. Sheaves eccentric or out of balance.
   i. Vibration isolators improperly adjusted.
   j. Out-of-balance or corroded wheel (rebalance or replace if necessary).
   k. Accumulation of material on wheel (remove excess material).

COILS

Chilled Water Coil

Typical coil vents, drains, and lifting points for the Chilled Water Coil are shown in Fig. 59.

DX Coil

Charge refrigerant. Also refer to condensing unit service and installation instructions. Refrigerant operating charge for unit coil is shown in Table 4.

SERVICE

General

1. Place a suitable walkway to protect floor insulation whenever entering the fan section.
2. Review Safety Considerations at beginning of these instructions. Good safety habits are important tools when performing service procedures.
3. To make speed measurements, use a strobe-style tachometer or calculate per Step 6 of Start-Up, Check List on page 62.

Fan Motor Replacement

1. Shut off motor power.
2. Disconnect and tag power wires at motor terminals.
3. Loosen motor brace-to-mounting-rail attaching bolts. Loosen belt tensioning bolts to adjust the motor position so V-belts can be removed without stretching over grooves.
4. Mark belt as to position. Remove and set aside belts.
5. Remove motor to motor bracket holddown bolts.
6. Remove motor pulley and set aside.
7. Remove motor.
8. Install new motor. Reassemble by reversing Steps 1-6. Be sure to reinstall multiple belts in their original position. Use a complete new set if required. Do not stretch belts over sheaves. Review the sections on motor and sheave installation, sheave alignment and belt tensioning discussed previously (Fig. 56 and 57).
9. Reconnect motor leads and restore power. Check fan for proper rotation as described in Start-Up, Check List.

Coil Cleaning

DETERGENT

Spray mild detergent solution on coils with garden-type sprayer. Rinse with fresh water. Check to ensure condensate line is free. Excess water from cleaning may flood unit if condensate line is plugged.

STEAM

Remove coil to facilitate cleaning and prevent damage to unit insulation. See Coil Removal section on page 64.

Winter Shutdown (Chilled Water Coil Only)

It is recommended that auxiliary drain piping be added to coil piping if yearly winterizing of coils is anticipated. This auxiliary piping should be located at the highest and lowest point on the respective header connection for each coil.

ANTIFREEZE METHODS OF COIL PROTECTION

1. Close coil water supply and return valves.
2. Drain coil as follows:
3. Method I — 'Break' flange of coupling at each header location. Separate flange or coupling connection to facilitate coil draining.
4. *Method II* — Open both valves to auxiliary drain piping.
5. After coil is drained, *Method I,* connect line with a service valve and union from upper nozzle to an antifreeze reservoir. Connect a self-priming reversible pump between the low header connection and the reservoir. *Method II,* make connection to auxiliary drain valves.
6. Fill reservoir with any inhibited antifreeze acceptable to code and underwriter authority.
7. Open service valve and circulate solution for 15 minutes; then check its strength.

8. If solution is too weak, add more antifreeze until desired strength is reached, then circulate solution through coil for 15 minutes or until concentration is satisfactory.
9. Remove upper line from reservoir to reversible pump. Drain coil to reservoir and then close service valve.
10. Break union and remove reservoir and its lines.
11. Leave coil flanges or coupling open and auxiliary drain valves open until spring.

AIR DRYING METHOD OF COIL PROTECTION
(UNIT AND COIL MUST BE LEVEL FOR THIS METHOD.)

1. Close coil water supply and return main valves.
2. Drain coil as described in procedures for Antifreeze Methods of Coil Protection.
3. Connect air supply or air blower to inlet header connection and close its drain connection.
4. Circulate air and check for air dryness by holding mirror in front of open vent in outlet header drain connection. Mirror will fog if water is still present.
5. Allow coil to stand for a few minutes; repeat Step 4 until coil is dry.

Field-Installed Coils (39LA,LD Only)

When a 39LA or 39LD unit is ordered without the coil, the following loose parts are shipped (see Fig. 80):

- bottom coil baffle
- side hairpin baffle
- side header baffle
- top coil baffle

These parts should be field-installed onto the coil before placing the coil into the unit. Once the baffles are installed, install the coil with the downstream bottom of the coil attached to the upright mounting flange as shown in Fig. 81. Adjust the coil and then attach the top coil baffle to the top flange provided.

Coil Removal

HORIZONTAL UNIT SLANT COIL REMOVAL (39LA UNITS)

NOTE: Item numbers are in Fig. 81.

1. Refer to Fig. 10 for service area clearance.
2. Disconnect piping (Item 5).
3. On top panel (Item 3), remove screws located directly above side panels (Items 2 and 6). Top panels may be removed from unit to provide more workspace, but it is not required.
4. Remove right side panels (Item 6).
5. If accessory is present, remove accessory side panel (Item 1) on left side of unit. Detach filter track support bracket if upstream accessory is a filter.
6. Remove screws from inside baffle (Item 13). Leave baffle attached to left side panel (Item 2).
7. Remove left side panel (Item 2).
8. Remove condensate baffle (Item 8).
9. Remove coil holddown screws (Items 9 and 11).
10. Remove baffle screws (Item 4) from downstream side of coil.
11. Tilt coil (Item 10) away from coil support panels (Items 7 and 12) and slowly slide coil out of unit.
12. Replace coil by reversing preceding Steps 1-11.

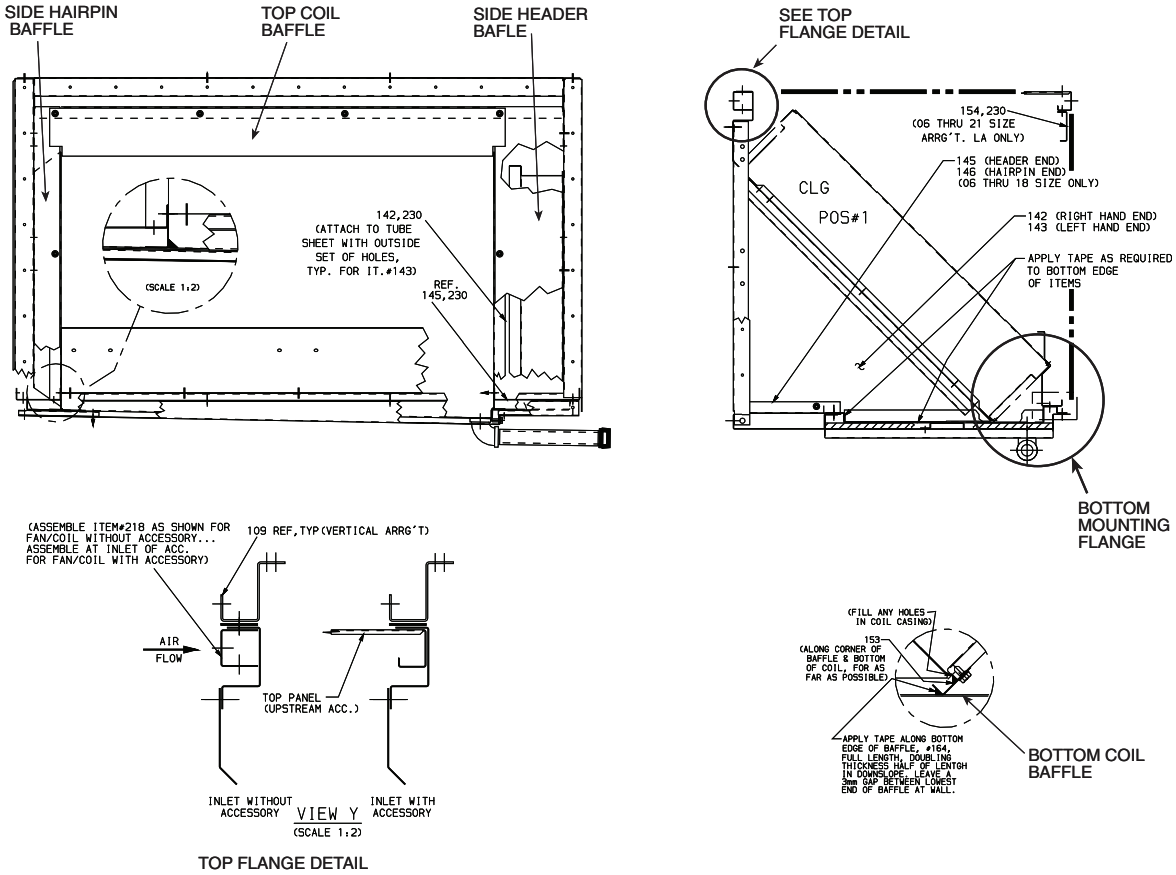

Fig. 80 — Field-Installed Coils (39LA and LD only)

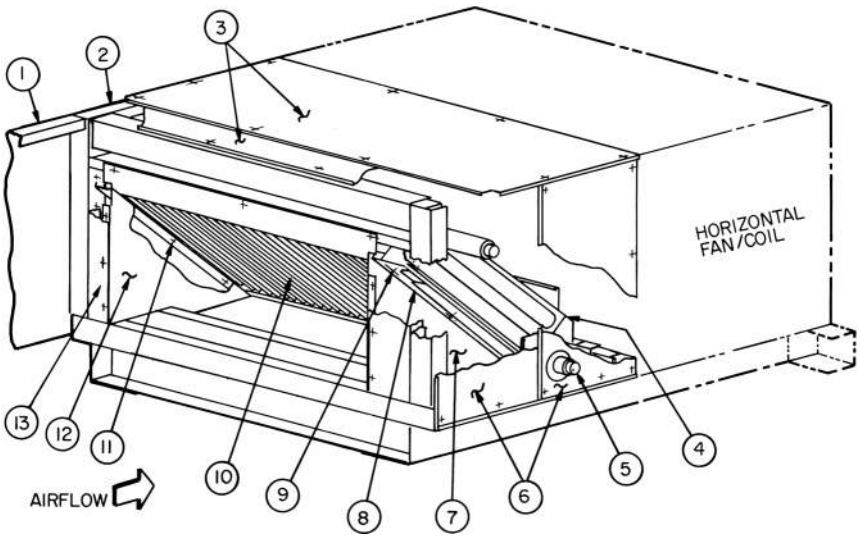

LEGEND

1	— Accessory Side Panel	**8**	— Condensate Baffle
2	— Left Side Panel	**9**	— Holddown Screws
3	— Top Panels	**10**	— Coil
4	— Baffle Screws	**11**	— Holddown Screws
5	— Piping	**12**	— Left Support Panel
6	— Right Side Panels	**13**	— Inside Baffle
7	— Right Support Panel		

Fig. 81 — Horizontal Unit Slant Coil Removal (39LA Units — Sizes 03-21)

VERTICAL UNIT SLANT COIL REMOVAL (39LD UNITS)

NOTE: Item numbers are in Fig. 82.

1. Refer to Fig. 10 for service area clearance.
2. Disconnect piping (Item 6).
3. Through fan access door (Item 2), remove screws (Item 3), while holding angle (Item 4) to top of coil side panels (Item 7). On opposite end of unit, gain access to similar screws by removing side panels (Item 1).
4. Remove right side panels (Item 7).

   Support of fan section may be required after removal of side panels (Items 7 and 16).
5. If accessory is present, remove accessory side panel (Item 15) on left side of unit. Detach filter track support bracket if upstream accessory is a filter.
6. Remove screws from inside baffle (Item 14). Leave baffle attached to left side panel (Item 16).
7. Remove left side panel (Item 16).

   Support of fan section may be required after removal of side panels (Items 7 and 16).
8. Remove condensate baffle (Item 9).
9. Remove coil holddown screws (Items 10 and 12).
10. Remove baffle screws (Item 5) from downstream side of coil.
11. Tilt coil (Item 11) away from coil support panels (Items 8 and 13).
12. Replace coil by reversing preceding Steps 1 - 11.

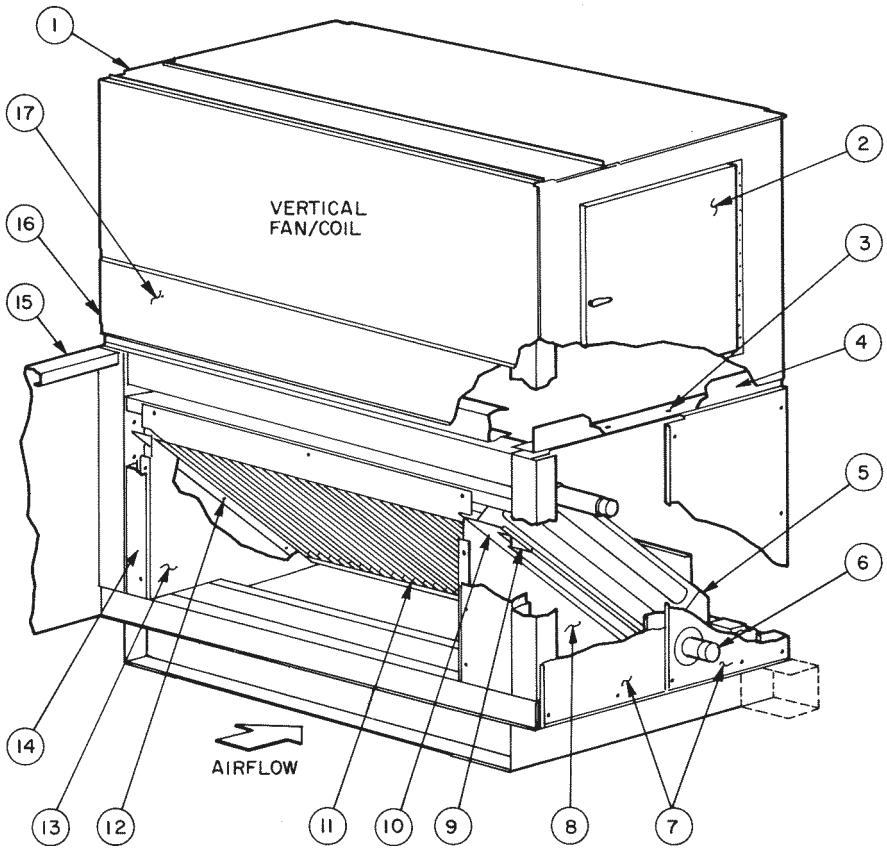

LEGEND

1	Fan Side Panel	**10**	Holddown Screws
2	Fan Access Door	**11**	Coil
3	Screws	**12**	Holddown Screws
4	Angle	**13**	Left Support Panel
5	Baffle Screws	**14**	Inside Baffle
6	Piping	**15**	Accessory Side Panel
7	Right Side Panels	**16**	Left Side Panels
8	Right Support Panel	**17**	Rear Panel
9	Condensate Baffle		

Fig. 82 — Vertical Unit Slant Coil Removal (39LD Units — Sizes 03-21)

HORIZONTAL OR VERTICAL UNIT — DUAL COIL REMOVAL (39LA, LD UNITS — SIZE 25)

NOTE: Item numbers are in Fig. 83 unless otherwise indicated.

1. Refer to Fig. 10 for service area requirements.
2. Disconnect piping (Item 5).
3. Horizontal Unit, 39LA — On top panel (Item 3) remove screws located directly above side panels (Items 2 and 6). Top panels may be removed from unit to provide more work-space, but it is not required.

   Vertical Unit, 39LD — Through fan access door (Item 2, Fig. 82), remove screws (Item 3, Fig. 82) holding angle (Item 4, Fig. 82) to top of coil panels (Item 7, Fig. 82).

   Remove rear panel (Item 17, Fig. 82) and remove baffle angle screws (Item 4) holding top baffle to coil.
4. Remove side panel(s) (Item 6).

   NOTE: Vertical units may require support of fan section after removal of side panels.
5. If accessory is present, remove accessory side panel (Item 1) on left side of unit. Detach filter track support bracket if upstream accessory is a filter.
6. Remove screws from horizontal baffle (Item 8). Leave baffle attached to upper condensate pan (Item 9).
7. Remove screws from inside baffles (Item 7). Leave baffles attached to left side panel (Item 2).
8. Slide coils and header and baffles from unit.
9. Replace coils by reversing proceeding Steps 1-8.

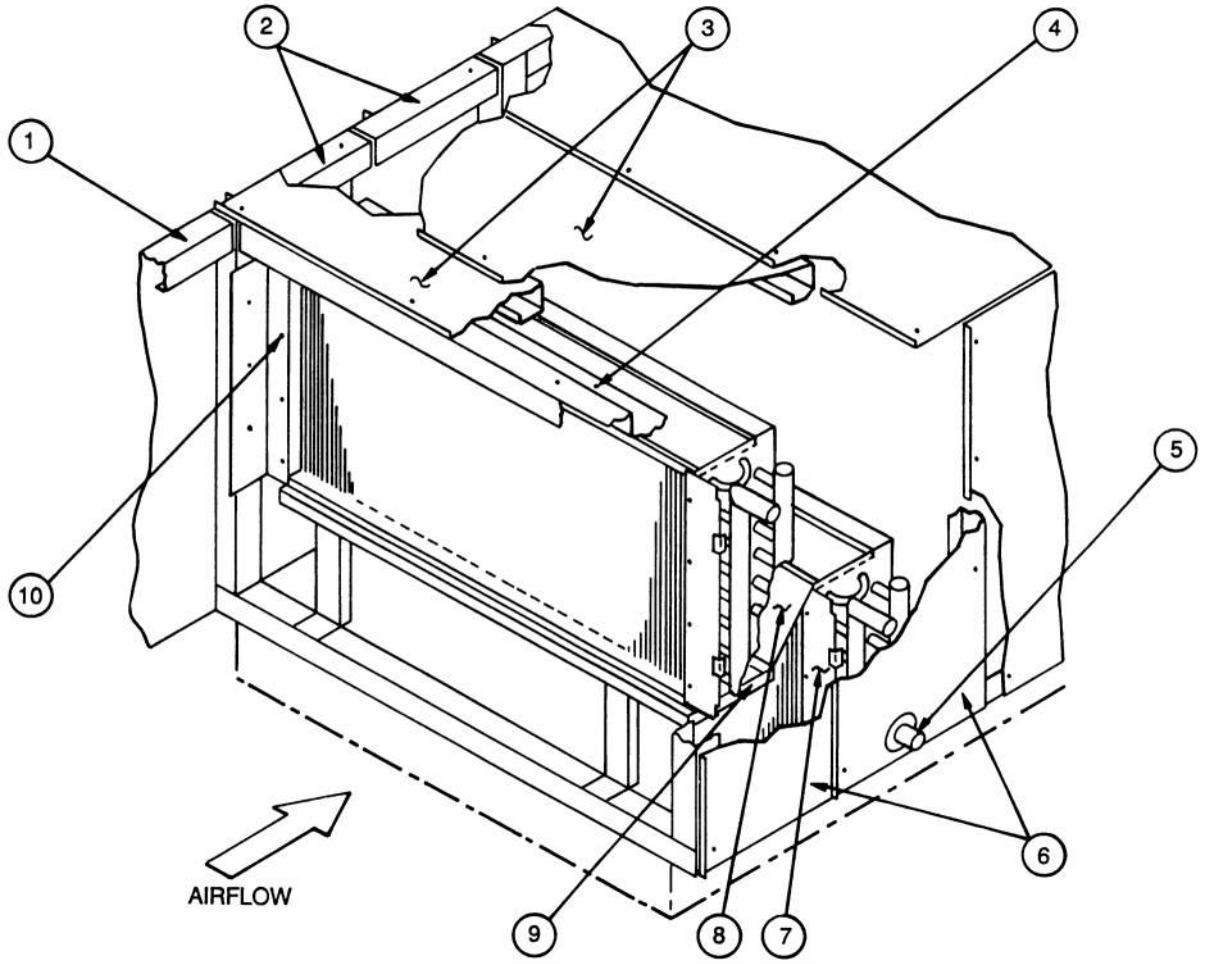

LEGEND

1	—	Accessory Side Panel	6	—	Right Side Panels
2	—	Left Side Panel	7	—	Inside Baffle
3	—	Top Panels	8	—	Horizontal Baffle
4	—	Baffle Angle Screws	9	—	Upper Condensate Pan
5	—	Piping	10	—	Baffle Screw

Fig. 83 — Horizontal or Vertical Unit — Dual Coil Removal (39LA,LD Units, Size 25)

HORIZONTAL OR VERTICAL UNIT — VERTICAL COIL REMOVAL (39LB,LC,LF,LH UNITS)

Item numbers are in Fig. 84 unless otherwise indicated.

1. Refer to Fig. 10 for service area requirements.
2. Disconnect piping (Item 6).
3. Horizontal Unit, 39LB and 39LC — On top panel (Item 4) remove screws located directly above side panels (Items 2 and 7). Top panels may be removed from unit to provide more workspace, but it is not required.

   Vertical Unit, 39LF and 39LH — Through fan access door (Item 2, Fig. 82), remove screws (Item 3, Fig. 82) holding angle (Item 4, Fig. 82) to top of coil panels (Item 7, Fig. 82).

   Remove rear panel (Item 17, Fig. 82) and remove baffle angle screws (Item 5) holding top baffle to coil.
4. Remove side panel(s) (Item 7).

   Vertical units may require support of fan section after removal of side panels.
5. If accessory is present, remove accessory side panel (Item 1) on left side of unit. Detach filter track support bracket if upstream accessory is a filter.
6. Remove screws (Item 8) from inside baffle (Item 3). Leave baffle attached to left side panel (Item 2).
7. Slide coil and header end baffle from unit.
8. Replace coil by reversing preceding Steps 1-7.

Changing Coil Hand

1. Electric heat coil hand cannot be changed.
2. The coil cover panel is not part of the coil. Remove cover panel from end of unit. New holes must be cut in coil cover panel. Original holes must be plugged and insulated. New side panels may be necessary when changing coil hand.

NU-FIN COILS

The Nu-Fin coil is airflow direction sensitive, especially when used in dehumidifying applications. Hydronic versions are counterflow circuited for full gravity draining when installed level.

Correct installation will result in the typical bottom inlet on leaving air face and top outlet on entering air face of coil, a self-venting design. This will ensure cold air contact with cold water, and warm air with hot water.

Coil repositioning for opposite hand application will compromise one or more of these characteristics. However, there will be those situations where this may prove acceptable.

As a general rule, a change from counterflow circuiting to parallel flow for sensible heating and cooling applications will result in a 5% drop in net capacity per row of coil. In one and two row heating coils, the actual drop may not be measurable, thus of insignificant consequence.

It is important that the airflow direction of the Nu-Fin coil be adhered to when latent cooling is possible. Significant moisture carryover from the face of the dehumidifying coil will result if this rule is violated, even at very low face velocities. The same result is often experienced if after-market fin coatings are applied.

If a Nu-Fin hydronic coil is installed with correct airflow, but opposite piping hand, and counterflow is maintained, steps must be taken to ensure that the coil is continuously vented, and that the water velocity is maintained to prevent the coil from air-binding.

Hot or cold areas of the coil face (or otherwise broad temperature differences and stratification) are usually indications that one or more circuits are air-locked internally. This can result in coil freeze-up (a condition NOT covered by warranty).

Refrigerant coils may be rotated for opposite hand applications, maintaining the proper airflow direction.

Do not reposition the distributor(s), they will perform equally well in upflow or downflow positions. When soldering expansion valves to up-feed distributors, use the minimum satisfactory amount of solder to prevent damaging the valve or plugging passages.

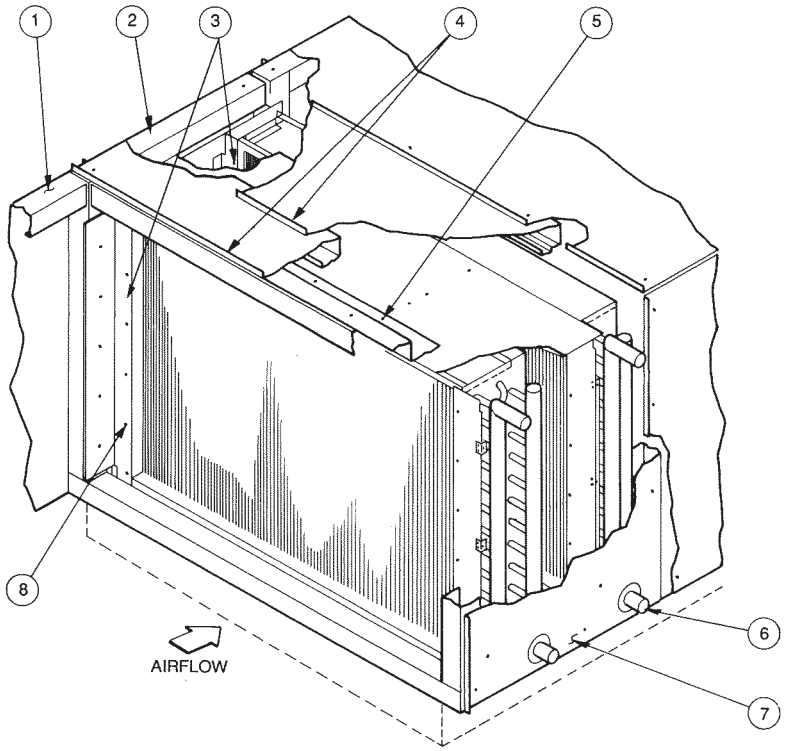

LEGEND

1	—	Accessory Side Panel
2	—	Left Side Panel
3	—	Inside Baffles
4	—	Top Panels
5	—	Baffle Angle Screw
6	—	Piping
7	—	Right Side Panel
8	—	Baffle Screw

Fig. 84 — Horizontal or Vertical Unit — Vertical Coil Removal (39LB,LC,LF,LH Units)

DIRECT EXPANSION COILS

Rotate the coil in vertical plane and reinstall. Distributor must be on downstream side of coil. (Refer to Fig. 85).

CHILLED WATER AND HOT WATER COILS

These coils can be rotated. If coil is rotated in vertical plane and reinstalled with counterflow maintained, supply will be at the top of the coil and return will be at the bottom. Ensure coil is continuously vented and water velocity is maintained to prevent air binding.

⚠ CAUTION

Chilled and hot water coils must not be rotated horizontally. If coils are rotated horizontally, severe water blow-off will result.

STEAM INNER DISTRIBUTING TUBE COILS

Rotate in horizontal plane and reinstall. See Fig. 85.

PIPING

Direct expansion, chilled water, and hot water coils should always be piped for counterflow. (Fluid should enter the coil at the leaving-air side.) Steam coils must have the condensate connection at bottom of coil.

To determine intervals for cleaning coils in contaminated air operations, pressure taps should be installed across the coils and checked periodically. Abnormal air pressure drop will indicate a need for cleaning the coils.

Annual maintenance should include:

1. Clean the line strainers.
2. Blow down the dirt leg.
3. Clean and check operation of steam traps.
4. Check operation of control valves.
5. Check the operation of check valves to prevent condensate flowback.
6. Check operation of thermostatic air vents, if used. A float and thermostatic trap will contain a thermostatic air vent. When the bellows is ruptured, it will fail closed.
7. Check operation of vacuum breakers.
8. Check operation of the thermal protection devices used for freeze-up protection.
9. Steam or condensate should not be allowed to remain in the coil during the off season.This will prevent the formation and build up of acids.

There are additional precautions and control strategies, as found in various catalogs and in the ASHRAE Fundamentals Handbook and in the Carrier System Design Guide — Piping Section, when the entering-air temperature to the coil falls below 35°F. These conditions occur when IDT coils are used for pre-heat and/or face and bypass applications.

Freeze up protection:

1. Use a strainer in the supply line and the dirt leg ahead of the trap.

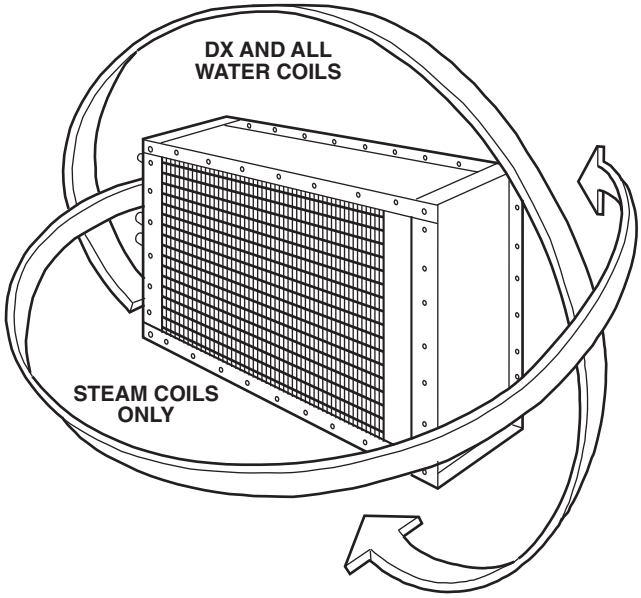

Fig. 85 — Coil Rotation

2. Use a vacuum breaker in the return.
3. Do not use overhead returns from the coil. A floodback can occur.
4. An immersion thermostat to control outdoor-air dampers and the fan motor is recommended. This control is activated when the steam supply fails or the condensate temperature drops below a predetermined temperature, usually 120°F.
5. On low pressure and vacuum systems, the immersion thermostat may be replaced by a condensate drain with a thermal element. This element opens and drains the coil when the condensate temperature drops below 165°F. Note the thermal condensate drain is limited to 5 psig pressure. At greater coil pressures they will not open.

In spite of the precautions listed above, a coil may still freeze up. An oversize capacity coil, at partial load, with a modulating steam control valve will occasionally freeze. Freezing occurs in the 20°F to 35°F range of entering-air temperatures. A better installation would be an undersize coil, with an on/off control valve with thermostatic control in the outside air, set at 35°F air temperature, installed downstream of the first coil; or setting the minimum steam pressure at 5 psig.

Filters

FILTER SECTIONS

See Table 26 for filter data. Filters are field-supplied.

Flat filter section can use 2 in. or 4 in. thick filters. The flat filter section as shipped accepts 2 in. filters. Remove spacer in each filter track to provide the 4 in. space required to accommodate 4 in. filters.

On all filter sections, filters are pushed into the track until they touch the opposite side of the unit. Any remaining space is taken up by the adjustable 2-piece sheet metal spacer. See Fig. 86 for filter arrangements.

Fan Shaft Bearing Removal

1. Lock open and tag electrical disconnect.
2. Enter through fan section access door or remove panels as required.
3. Place plywood or other rigid covering on floor to protect insulation from damage.
4. Block wheel so that it will not pinwheel due to natural draft through the unit.
5. Loosen motor base to frame bolts. Adjust motor to release belt tension so removal of belts is done without stretching. *Do not stretch belts over sheaves. Damage to belt can result.*
6. Remove bolts on bushing of fan shaft sheave, insert bolts in jacking hole provided on bushing and slowly jack bushing from sheave. Then remove bushing on sheave.
7. Loosen bearing setscrews and locking collar.
8. Remove bearing holddown bolts.
9. Remove bearing while observing the following precautions:
   a. Make certain fan shaft surface is not rough or scored. If so, clean up surface with fine emery cloth.
   b. Add a few drops of oil after cleanup of shaft end.

⚠CAUTION

It should not be necessary to drive a new bearing onto shaft. If light tapping is needed, do not tap against outer race.

10. Check fan shaft diameter at bearing mount. If worn by more than 0.001 in. below nominal, shaft should be replaced.
11. Install new bearing, tighten holddown bolts and then tighten bearing locking collar and setscrews.
12. Make certain fan wheel does not rub sides of fan housing after installing new bearings.
13. Recoat fan shaft with a rust inhibitor or grease.
14. Replace sheave and belts. Adjust and align as described in Installation sections on installing sheaves and V-belts.
15. Remove insulation protection.
16. Replace access panels.
17. Restore electrical power.

Table 26 — Filter Data

39L UNIT SIZE	03	06	08	10	12	15	18	21	25
Angle Filter Section Filter Qty...Size (in.)	2…16x25	4…16x20	2…16x20 2…16x25	4…16x25	6…16x20	9…16x20	12…16x20	4…16x20 8…16x25	4…16x20 8…16x25
Nominal Face Area (sq ft)	5.56	8.89	10.00	11.11	13.33	20.00	26.67	31.11	31.11
Filter Mixing Box Section Filter Qty...Size (in.)	2…16x25	4…16x20	2…16x20 2…16x25	4…16x25	6…16x20	9…16x20	9…16x20	3…16x20 6…16x25	4…16x20 8…16x25
Nominal Face Area (sq ft)	5.56	8.89	10.00	11.11	13.33	20.00	20.00	23.33	31.11
Flat Filter Section Filter Qty...Size (in.)	2…16x16	2…20x20	2…20x25	2…16x25 1…20x25	3…20x25	6…16x20	3…16x20 3…20x20	3…20x25 3…16x25	2…16x20 2…20x20 2…20x25 2…16x25
Nominal Face Area (sq ft)	3.56	5.56	6.94	9.03	10.42	13.33	15.00	18.75	22.50

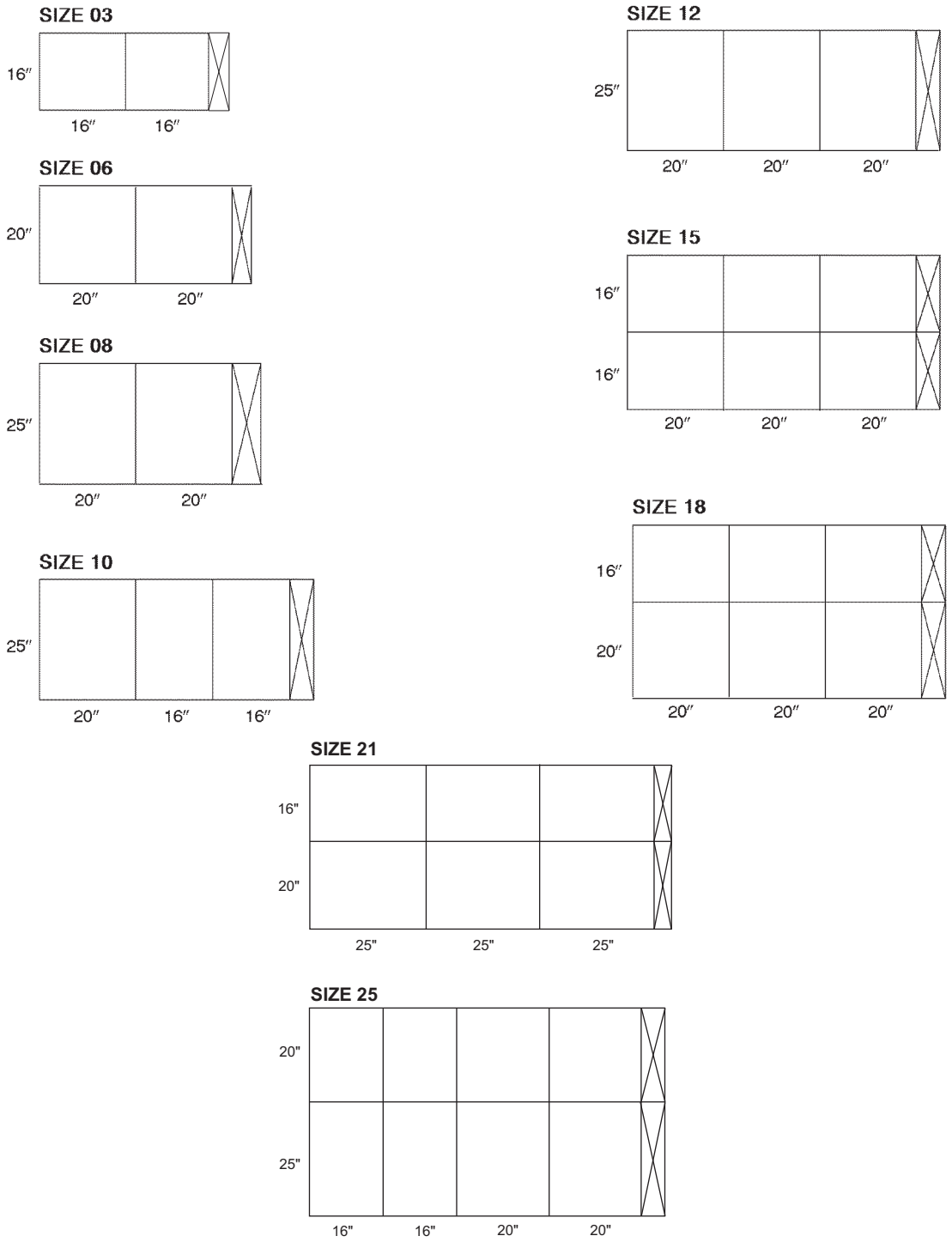

Fig. 86 — Filter Arrangement, 2-in. and 4-in. Flat

Fan and Shaft Removal

The fan wheel and shaft may be removed through inlet side of fan housing. See Fig. 87.

1. Remove drive belts as described in Fan Shaft Bearing Removal on page 70.
2. Block up fan wheel within housing to prevent dropping when bearing bolts are removed.
3. Loosen and remove bearing holddown bolts.
4. Remove bearing support channels and inlet ring from one side.
5. Remove fan shaft and fan wheel from unit.
6. Remove fan shaft from fan wheel.
7. Replace shaft and wheel into fan in the reverse order of their removal.
8. Inspect bearings and if serviceable, replace on shaft.
9. Align fan wheel and shaft assembly in fan scroll. Check cut-off location if wheel failure damaged cutoff plate. See Fig. 88.
10. Tighten bearing holddown bolts, bearing setscrews and shaft setscrews.
11. Field balancing of shaft and wheel is recommended.

Replacement shafts must have a diameter tolerance at bearing mount of $\frac{+.0000}{-.001}$ nominal. Carrier-specified parts are recommended.

Lubrication

MOTORS

Lubricate in accordance with nameplate attached to motor or with manufacturer's recommendations included with motor.

BEARINGS

Fan Bearings

Lubricate fan bearings every 3 months with suitable bearing grease. Typical lubricants are given in Table 27.

Inlet Vane and Outlet Damper Bearings

These bearings are oil-impregnated. Annually lubricate with a few drops of nondetergent SAE (Society of Automotive Engineers) 20-weight oil.

Table 27 — Lubricant Data

MANUFACTURER	LUBRICANT
Sunoco	Prestige 42
Texaco	Multipak 2
Texaco	Regal AFB-2[a]
Mobil	Mobilplex EP No. 1

NOTE(S):

a. Preferred lubricant because it contains rust and oxidation inhibitors.

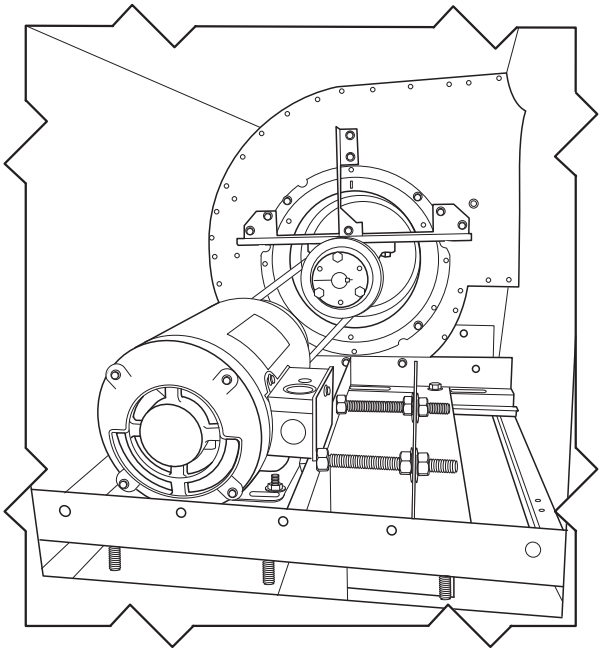

Fig. 87 — Fan Shaft and Bearing Removal

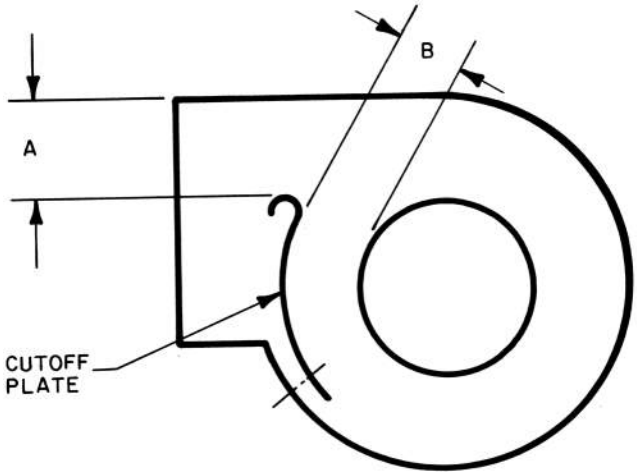

39L UNIT SIZE	CUTOFF A	CUTOFF CLEARANCE B
03	6-5/8	7/8
06	8	1
08	10-3/8	1-1/2
10	9-3/4	1-3/8
12	9-3/4	1-3/8
15	12	1-5/8
18	15-3/4	2
21	15-3/4	2
25	20-1/2	2-11/16

Fig. 88 — Fan Cutoff Plate Data (in.)

Fan Sled Disassembly

In some cases on vertical units (39LD, 39LF, or 39LH), it may be necessary to remove the fan sled (Fig. 82) from the unit and break it down into smaller components.

To remove the fan sled (Fig. 89):

1. Disconnect the fan discharge by removing the screws from the discharge of the fan housing. Remove the fan discharge panel (Fig. 90).
2. Remove all of the panels from the fan section (Fig. 91).
3. Remove the fan by removing the 4 screws on the corner of the fan sled. On larger units the fan sled may be extremely heavy. Affix appropriate rigging to remove the required components, noting on a diagram where each component is attached. See Fig. 92.

NOTE: Reinstall the components in reverse order.

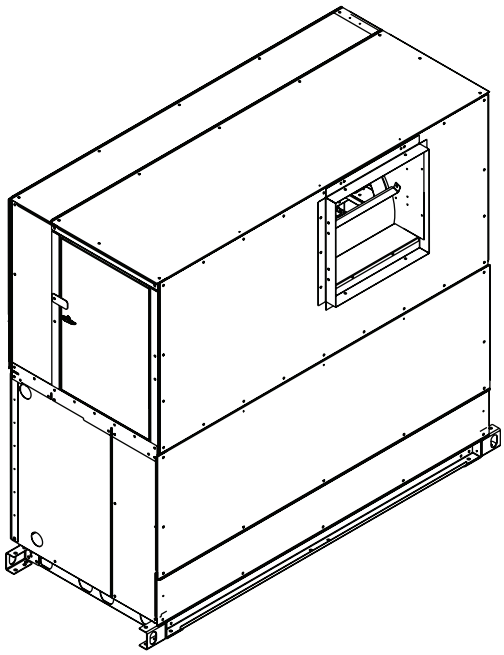

Fig. 89 — Fan Sled

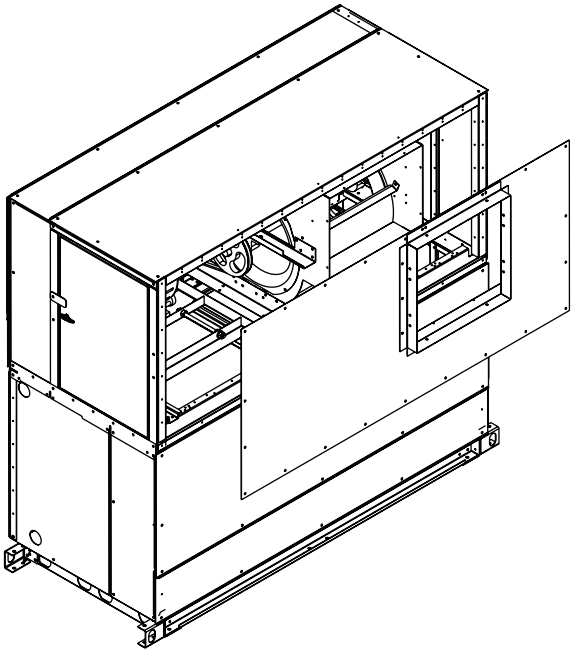

Fig. 90 — Remove Fan Discharge Panel

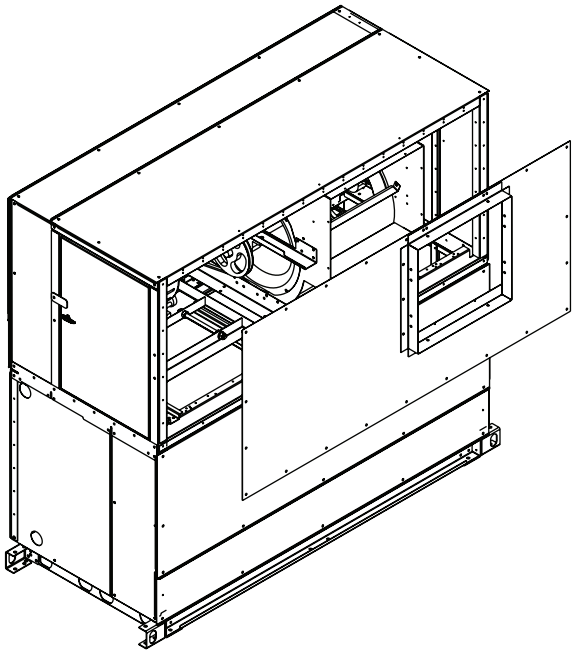

Fig. 91 — Remove All Panels

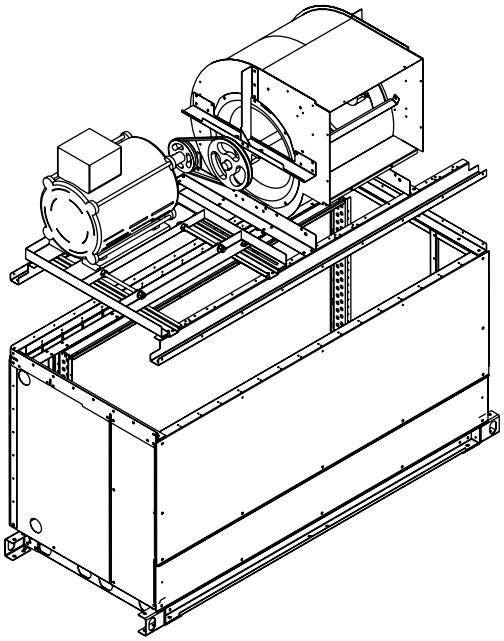

Fig. 92 — Remove Fan

LEAK DETECTION AND DISSIPATION

Overview

For 39L units using R-454B and R-32 refrigerants, a factory-installed refrigerant leak dissipation system will be required as a safety protocol in case of refrigerant leakage. The dissipation system features A2L refrigerant leak detection sensors and a dissipation control board.

The A2L refrigerant detection sensor communicates via a wiring harness to the dissipation board. Dissipation mode initiates when the refrigerant sensor detects a refrigerant leak above 20% Lower Flammable Limit (LFL), here the board:

1. Sends a signal to the fan controller to activate the fan to the minimum dissipation airflow, (this minimum value will be 20% of the nominal operating condition).
2. Sends a signal to the customer's building management system (BMS). The customer will have to program the signal on their BMS to shut down the compressor, electric heat, gas heat and open zoning dampers.

Once the sensor detects that the gas concentration has dropped below 20% LFL, the dissipation board will initiate a 5-minute delay to remain in dissipation mode. After 5 minutes the board will send a signal to the fan and BMS to return to its normal operation.

The dissipation board also includes a feature to allow smoke detector overrides during dissipation mode. In the case that refrigerant leaks within the unit and dissipation mode is activated, the smoke detector would be able to override the board's function if a fire or emergency were to occur and return the unit to normal operation.

IMPORTANT: For units containing A2L refrigerant R-454B or R-32, external power and ground must be ALWAYS given to the dissipation board. Failure to provide proper power and grounding can lead to false dissipation events.

Dissipation System Components

The part numbers for refrigerant sensor and dissipation boards are detailed in Table 28.

Table 28 — Refrigerant Leak Dissipation System Parts

DESCRIPTION	PART NUMBER
R-454B Leak Sensor	HH96ZX005
R-32 Leak Sensor	39MA51000097
A2L Dissipation Board (Single Sensor)	HK50ZA004
A2L Dissipation Board (Two Sensor)	HK50ZA007

See Fig. 93 for the A2L Refrigerant leak sensor details. If the refrigerant sensors are ever to be replaced, ensure replacement parts are specified by the manufacturer.

Orientation and location of the refrigerant sensors is critical to their functionality. Sensors will be factory-installed in the correct upright orientation – with wire connections facing the floor – and location, no alterations are to be made to this positioning. See Fig. 94 for sensor locations for a single coil 39L unit, and Fig. 95 shows sensor locations for a 39L staggered coil.

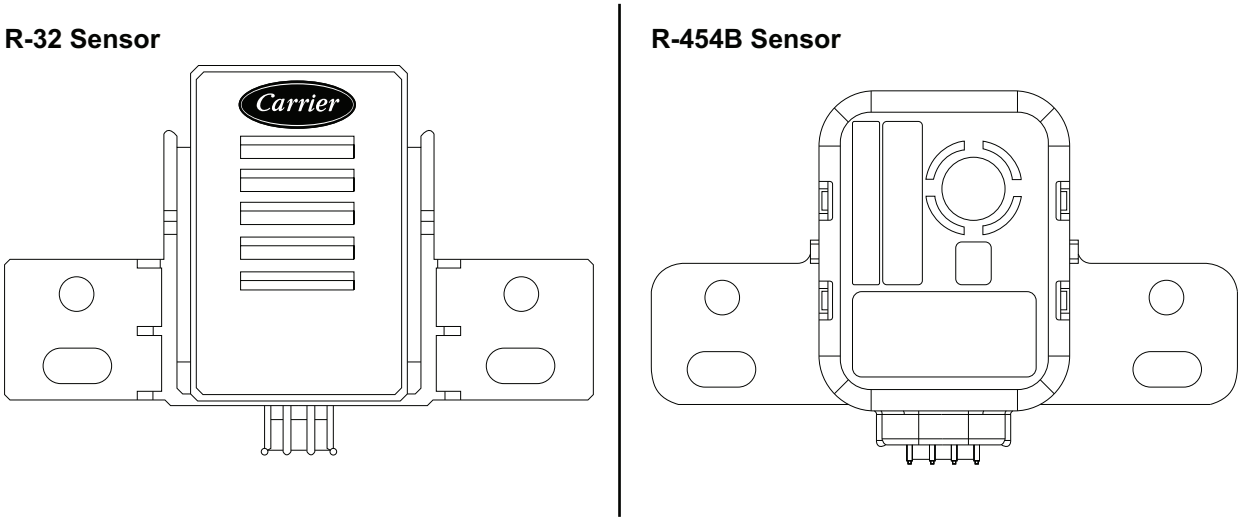

Fig. 93 — Refrigerant Leak Sensor for (a) R-32 and (b) R-454B

Fig. 94 — Sensor Locations for 39L Units with Single Coil

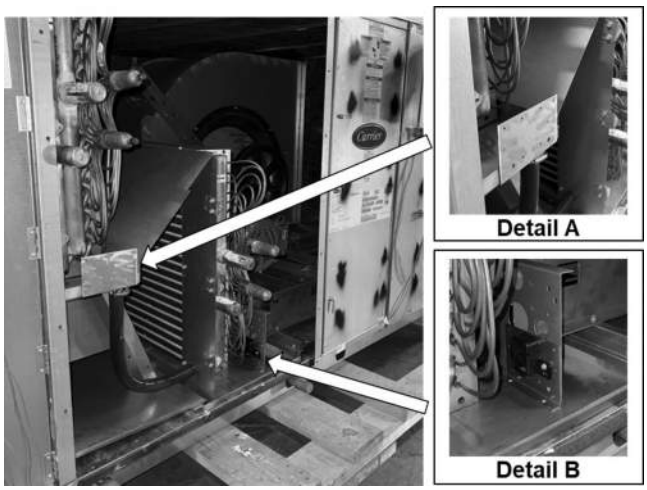

Fig. 95 — Sensor Locations for 39L Units with Staggered Coils

Figure 96 shows the A2L dissipation board layout. A test button is included on the A2L dissipation board. After pressing the test button for approximately 1-4 seconds, the system will enter A2L Leak Dissipation Mode for 60 seconds. The status bar will indicate dissipation mode is enabled by flashing one time. Consult Table 29 for more test button functionality.

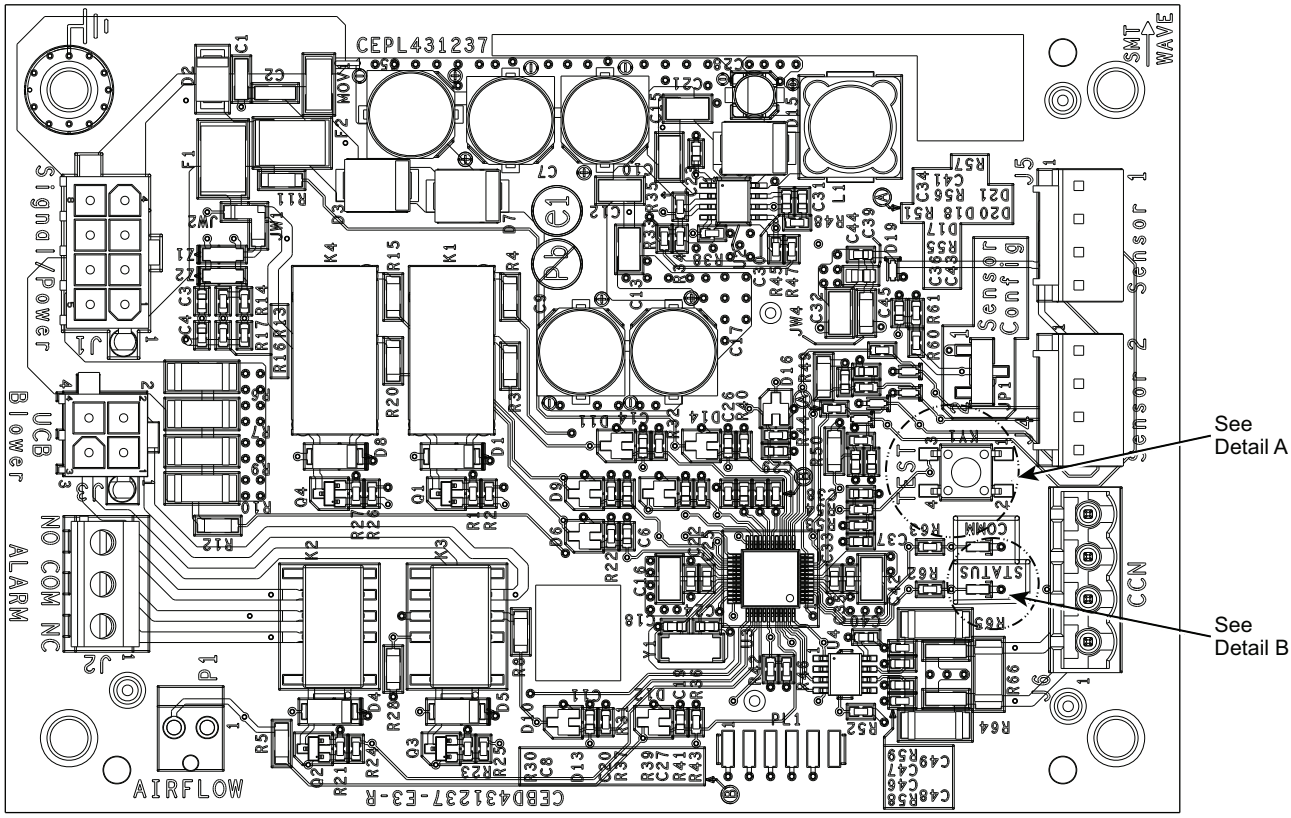

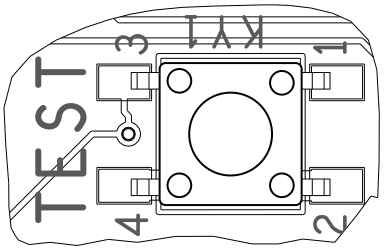

Detail A — Test Button

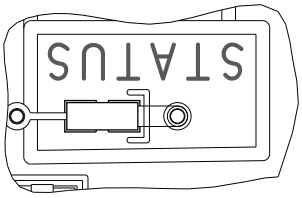

Detail B — Status LED

Fig. 96 — Dissipation Board Layout

Table 29 — Dissipation Board Test Button Functionality

TEST BUTTON HOLD TIME (sec)	FUNCTION	STATUS BAR
1-4	Activates Dissipation Mode	Flash 1 time
5-29	Display flash code history	Will display previous flash code
30+	Flash Code 6	Flash 6 times
3 Rapid Presses	Clear flash code history	Status bar will return to steady

The dissipation boards status bar can be used to troubleshoot the dissipation system. Reference Table 30 for status bar codes and the corresponding error mode. A status code label is located on every unit containing R-32 and R-454B. This label is located on the A2L control box enclosure and reiterates the information in Table 30.

Table 30 — Dissipation Board Status LED Error Codes

STATUS LED	ERROR MODE
ON	Normal Operation
OFF	Hardware Failure
1 Flash	Sensor 1 Refrigerant Leak
2 Flash	Sensor 1 Open
3 Flash	5 Minute Mitigation Off Delay
4 Flash	Blower Output Not Operating
5 Flash	Sensor 1 Fault
6 Flash	Test Button Stuck
7 Flash	K1 or K4 Relay Wiring Inverted
8 Flash	K1 or K4 Relay Wiring Shorted
9 Flash	Sensor 2 Refrigerant Leak
10 Flash	Sensor 2 Open
11 Flash	Sensor 2 Fault
12 Flash	Incorrect Temp Sensor
13 Flash	Fire or Smoke Override

VARIABLE FAN DRIVE (VFD)

For units containing A2L refrigerant R-454B or R-32, the VFD has been programmed with a dissipation frequency in case of a refrigerant leak event. When triggered by a refrigerant leak, this programming will override current VFD programming, and instead operate at 15 Hz until the leak has dissipated. After which, normal operation will ensue. Reference Tables 31 and 32 for details on which programming parameters are altered for units containing A2L refrigerants.

Table 31 — A2L VFD Program Parameters (ACH580)

PARAMETER NUMBER	DESCRIPTION	VALUE
32.05	Supervision 1 function	Default
32.07	Supervision 1 signal	Default
32.10	Supervision 1 high	Default
32.11	Supervision 1 hysteresis	Default
70.02	Override enable	On
70.03	Override activation source	–DI6
70.05	Override direction	Forward
70.06	Override frequency	15 Hz

Table 32 — A2L VFD Program Parameters (ACH180)

PARAMETER NUMBER	DESCRIPTION	VALUE
32.05	Supervision 1 function	Default
32.07	Supervision 1 signal	Default
32.10	Supervision 1 high	Default
32.11	Supervision 1 hysteresis	Default
70.02	Override enable	On (1)
70.03	Override activation source	–DI3 (9)
70.05	Override direction	Forward (0)
70.06	Override frequency	15 Hz

IMPORTANT: For units containing A2L refrigerant R-454B or R-32, external power and ground must be ALWAYS given to the dissipation board. Failure to provide proper power and grounding can lead to false dissipation events.

IMPORTANT: For units containing A2L refrigerant R-454B or R-32, DO NOT overwrite or remove A2L factory programmed settings. Alteration made to this programming could result in undetected refrigerant leaks.

FACTORY WIRING

A2L Enclosure Wiring

SENSOR

Units will contain 1-3 A2L refrigerant leak sensors per DX coil section. The number of sensors is dependent on type and configuration of the coil. Reference Table 33 for quantity of sensors for 39L units.

Table 33 — 39L Sensor Quantity per Coil Section

UNIT TYPE	NUMBER OF SENSORS	DX COIL CONFIGURATION
39L	1	Single
	2	Staggered

The sensor communicates to the dissipation board via wiring harness. The wiring harness will feature a 4-pin female connector on both ends, as shown in Fig. 97.

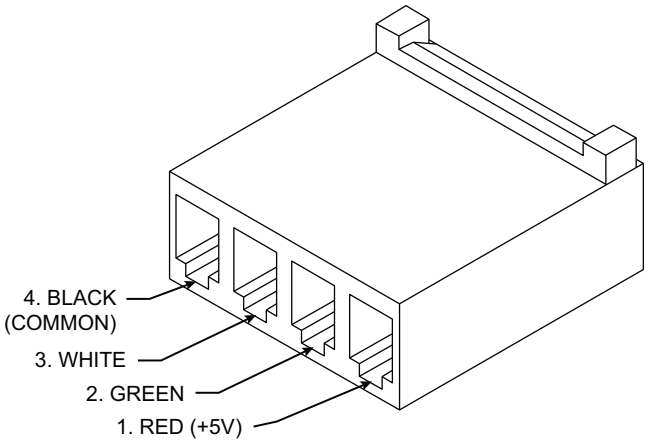

Fig. 97 — 4-Pin A2L Sensor Harness Connector

This harness will be attached to the A2L sensors 4-pin male connection point. These are mating components, so harness connector must be the correct orientation to fully engage with sensor pins.

The dissipation board will include a corresponding 4-pin male connection point, labeled "**Sensor 1**" or "**Sensor 2**", the other end of the A2L sensor harness will plug in here. See Fig. 98 for location of this connection point.

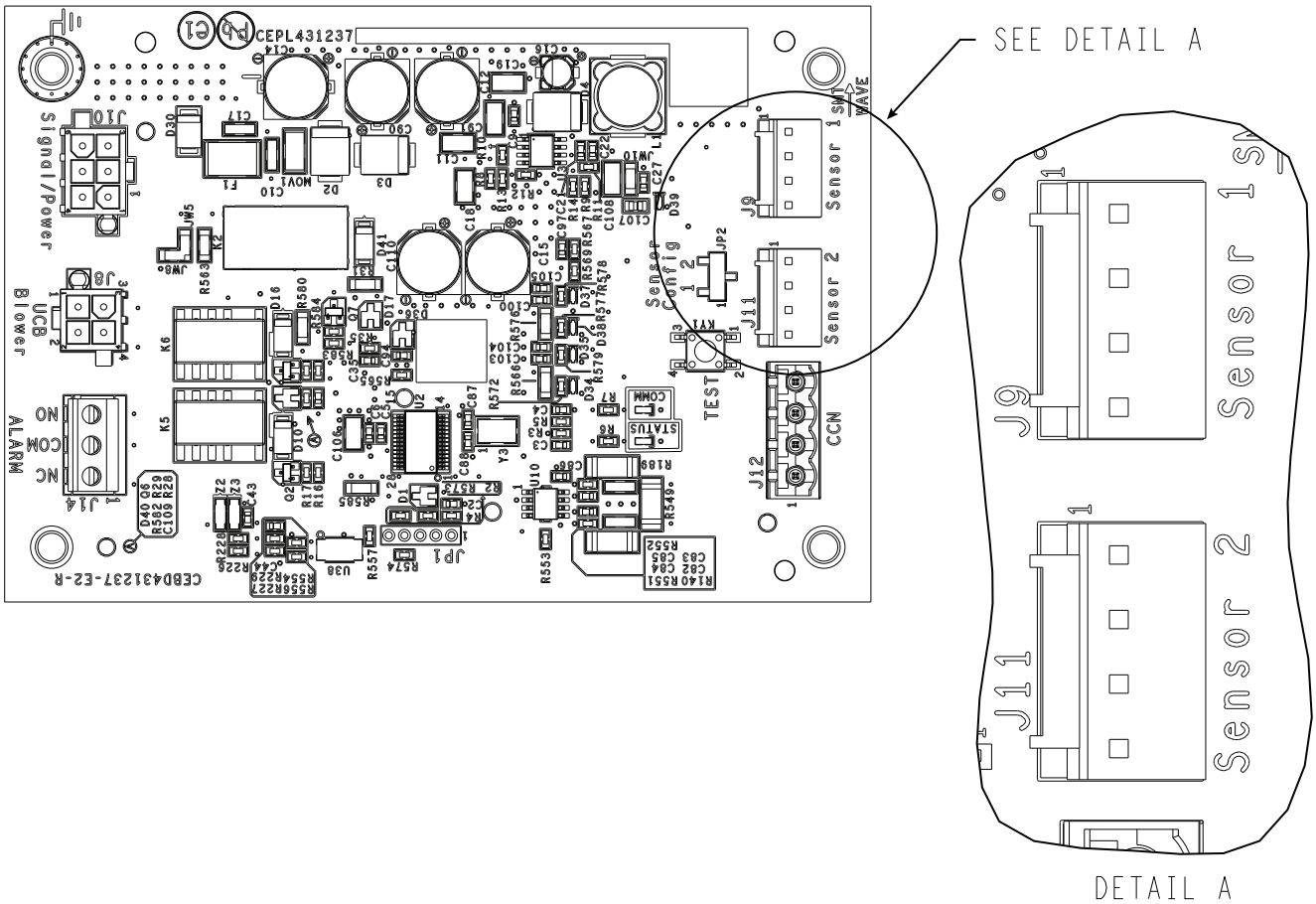

Fig. 98 — Dissipation Board Sensor Plug Locations

FIELD WIRING

General

Customers must provide power and ground connections to the A2L dissipation system enclosure. 24VAC is to be provided to terminal block 1, circuit 2. Ground is to be provided to terminal block 1, circuit 4.

> IMPORTANT: For units containing A2L refrigerant R-454B or R-32, external power and ground must be ALWAYS given to the dissipation board. Failure to provide proper power and grounding can lead to false dissipation events or inability to detect refrigerant leaks.

For units with two A2L direct expansion coil sections, only provide external power and grounding to the primary coils A2L dissipation system enclosure.

Shipping Splits

In the case of shipping splits, the fan controller and coil-to-coil wiring harnesses will be segmented based upon the number of shipping split sections. Customers must connect these harnesses after the unit is fully assembled and ensure all the connectors are attached before powering the dissipation system and/or unit.

For the fan controller harness, either a 2-pin or 4-pin Molex[1] connector will be implemented, dependent on fan controller type. Reference Table 34 for more details. Reference Fig. 99-100 for the 2-pin and 4-pin Molex, respectively.

Table 34 — Fan Controller Harness Molex Type

MOLEX DETAILS	FAN CONTROLLER TYPE
2-Pin	VFD
4-Pin	Starter

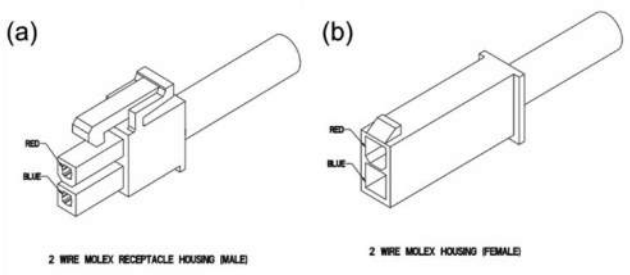

Fig. 99 — 2-Pin Molex Fan Controller Harness Connection

1. Third-party trademarks and logos are the property of their respective owners.

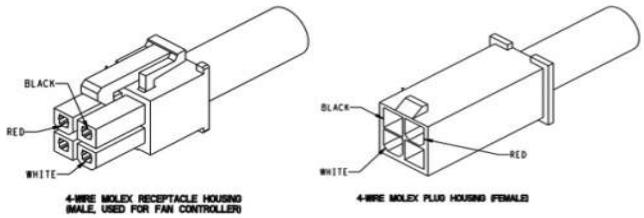

Fig. 100 — 4-Pin Molex Fan Controller Harness Connection

BUILDING MANAGEMENT SYSTEM (BMS)

It is the customers responsibility to connect the dissipation system to the BMS. Where the BMS is responsible for function of the dampers, electric heat, gas heat, compressor, and condenser function.

To connect the dissipation system to the customer BMS, use circuit 3 of terminal block 1 located inside the dissipation system enclosure.

If connected, when dissipation mode is entered, the BMS will be triggered, causing:

- Dampers to open.
- Electric and gas heat to turn off.
- Compressor and condenser to turn off.

SMOKE DETECTOR OVERRIDE

The smoke detector override feature will override the systems dissipation mode in case of fire. If connecting to this feature, customers must provide 24 VAC (from smoke detection device) to terminal block 1, circuit 1. If supplying this power, the jumper connection from terminal block 1, circuit 1 to terminal block 2, circuit 2 needs to be removed.

If smoke detector is triggered and the 24 VAC signal is lost, the fans should be disabled or ran at 0 rpm. The customer is responsible to setting up this feature within their own building management system.

DECOMMISSIONING

Before carrying out this procedure, it is essential that the technician is completely familiar with the equipment and all its detail. It is recommended good practice that all refrigerants are recovered safely. Prior to the task being carried out, an oil and refrigerant sample shall be taken in case analysis is required prior to re-use of recovered refrigerant. It is essential that electrical power is available before the task is commenced.

1. Become familiar with the equipment and its operation.
2. Isolate the system electrically.
3. Before attempting the procedure, ensure that:
   a. Mechanical handling equipment is available, if required for handling refrigerant cylinders.
   b. All personal protective equipment is available and being used correctly.
   c. The recovery process is supervised at all times by a competent person.
   d. Recovery equipment and cylinders conform to the appropriate standards.
4. Pump down refrigerant system, if possible.
5. If a vacuum is not possible, make a manifold so that refrigerant can be removed from various parts of the system.
6. Make sure that the cylinder is situated on the scales before recovery takes place.
7. Start the recovery machine and operate in accordance with instructions.
8. Do not overfill cylinders (no more than 80% of volume liquid charge).
9. Do not exceed the maximum working pressure of the cylinder, even temporarily.
10. When the cylinders have been filled correctly and the process completed, make sure that the cylinders and the equipment are removed from the site promptly and all isolation valves on the equipment are closed off.
11. Recovered refrigerant shall not be charged into another refrigerating system unless it has been cleaned and checked.
12. Equipment shall be labeled that it has been decommissioned and emptied of refrigerant. The label shall be dated and signed. For appliances containing flammable refrigerants, ensure that there are labels on the equipment stating the equipment contains flammable refrigerant.

© 2026 Carrier

START-UP CHECKLIST — 39L AHU UNITS

NOTE: To avoid injury to personnel and damage to equipment or property when completing the procedures listed in this start-up checklist, use good judgment, follow safe practices, and adhere to the safety considerations/information as outlined in preceding sections of this Installation, Start-Up and Service Instruction document.

I. PRELIMINARY INFORMATION

MODEL NO. _____ JOB NAME _____

SERIAL NO. _____ ADDRESS _____

START-UP DATE _____

TECHNICIAN NAME _____

ADDITIONAL ACCESSORIES

_____

II. PRE-START-UP

CONTROLS

Are thermostat(s) and indoor fan control wiring connections made and checked? (Y/N) _____

Are all wiring terminals tight? (including power to fan motors, heaters, etc.) (Y/N) _____

ELECTRICAL

Does electrical service correspond to unit nameplate? (Y/N) _____

Nameplate Supply Voltage/Phase: Rated _____ Measured _____

Nameplate Rated FLA Motor Current: Rated _____ Measured _____

Does setting for overload device (factory or field-provided) match motor FLA? (Y/N) _____

Does all field wiring conform to unit wiring diagram? (Y/N) _____

AIR HANDLER

Remove packaging and any construction debris. (Y/N) _____

Inspect for shipping and/or handling damage, make claims as required. (Y/N) _____

Inspect all panel flanges for damage. Panel flanges should be smooth with no sharp bends. (Y/N) _____

Are any door latches loose or damaged? If so, tighten or replace. (Y/N) _____

Check fan bearings and shaft(s) for tightness. (Y/N) _____

Hand turn fan to ensure no rubbing with housing. (Y/N) _____

Have fan and motor pulleys been checked for proper alignment? (Y/N) _____

Do the fan belts have proper tension? (Y/N) _____

Check fan speed with a laser-type tachometer or use VFD output to confirm operating speed. (Y/N) _____

Are proper air filters in place? (Y/N) _____

Are all wiring terminals to fan motors and heaters tight? (Y/N) _____

Is duct connected to unit? (Y/N) _____

Is unit properly supported? (Y/N) _____

Is unit level (for effective condensate drainage? (Y/N) _____

Verify wiring is correct for application (voltage, etc.) per component label. (Y/N) _____

Are field wiring penetrations into 39L properly sealed for air and water leaks (includes conduit inside box)? (Y/N) _____

Manufacturer reserves the right to discontinue, or change at any time, specifications or designs without notice and without incurring obligations.

PIPING

Is condensate trap properly sized? (Y/N) _____

Has water been placed in drain pan to confirm proper drainage? (Y/N) _____

Have leak checks been made at chillers, boilers, valves, and indoor coils? (Y/N) _____

Has air been bled from system? (Y/N) _____

Is freeze protection provided (if required)? (Y/N) _____

For DX system, has system been charged with refrigerant? (Y/N) _____

Is expansion valve sensing bulb properly installed and insulated? (Y/N) _____

Does the hydronic system include a pressure relief valve or other pressure relief device to protect the coil from operating pressures beyond the nameplate design working pressure rating? (Y/N) _____

Are coils equipped with control valves to stop fluid flow to save energy and prevent cabinet condensation (wild coil in cooling) when heating/cooling is not required? (Y/N) _____

Locate, repair, and report any leaks and ensure insulation is in place where needed. (Y/N) _____

III. START-UP

If this unit is to be used for construction conditioning without ductwork, ensure balancing is redone and filters replaced once construction is complete.

Ensure correct fan rotation. (Y/N) _____

After air and water balance is complete, are pulleys aligned? (Y/N) _____

If the fan sheaves were changed during the air balance, the assembly must be rebalanced.

Were the sheaves changed? (Y/N) _____

Was a dynamic balance performed on the fan assembly? (Y/N) _____

After air and water balance and at least 10 minutes running time, record the following measurements:

Check indoor fan speed and record:

Fan RPM	_____
Entering air db temp	_____
Unit entering air wb temp	_____
Leaving air db temp	_____
Leaving air wb temp	_____
Entering water temp	_____
Leaving water temp	_____

Ensure all water inside air handler is in condensate pan. (Y/N) _____

Check for vibration levels. (Y/N) _____

If electric heater is supplied, ensure heater airflow switch closes at design airflow. (Y/N) _____

NOTES:

_____
_____
_____
_____
_____
_____

SIGNATURE:_____ **DATE:**_____

CUT ALONG DOTTED LINE

CUT ALONG DOTTED LINE

© 2026 Carrier

Standard Product Warranty

COMMERCIAL EQUIPMENT

GENERAL LIMITED WARRANTY STATEMENT

Carrier Corporation (hereinafter "Company") warrants this product against failure due to defect in materials or workmanship under normal use and maintenance as follows. All warranty periods begin on the date of initial operation or 6 months from the date of shipment, whichever is earlier. If a part fails due to defect during the applicable warranty period Company will provide a new or remanufactured part, at Company's option, to replace the failed defective part at no charge for the part. Alternatively, and at its option, the Company will allow a credit in the amount of the then factory selling price for a new equivalent part toward the retail purchase price of a new Company product. Except as otherwise stated herein, those are Company's exclusive obligations under this warranty for a product failure. This limited warranty is subject to all provisions, conditions, limitations and exclusions listed below and on the reverse (if any) of this document.

PERIODS AND SCOPE OF COVERAGE

ONE YEAR LIMITED WARRANTY — Company provides a One Year Limited Warranty on all parts and components integral to the Carrier product identified above.

THREE YEAR LIMITED WARRANTY ON MICROCHANNEL CONDENSER COIL ONLY — Where an all aluminum air-cooled condenser coil manufactured with the microchannel technology is supplied by Carrier as an integral part of the product identified above, Company provides a Three Year Limited Warranty on the microchannel condenser coil.

GENERAL CONDITIONS

1. This warranty is to the original purchasing end user and is not assignable.
2. Installation, use, care and maintenance must be normal and in accordance with instructions contained in the Installation Instructions, Owner's Manual and Company's service information.
3. Carrier reserves the right to require the return, transportation charges prepaid by customer, of any and all parts or components claimed to be defective.

LIMITATIONS OF WARRANTIES: ALL IMPLIED WARRANTIES AND/OR CONDITIONS (INCLUDING IMPLIED WARRANTIES OR CONDITIONS OF MERCHANTABILITY AND FITNESS FOR A PARTICULAR USE OR PURPOSE) ARE LIMITED TO THE DURATION OF THIS LIMITED WARRANTY. SOME STATES OR PROVINCES DO NOT ALLOW LIMITATIONS ON HOW LONG AN IMPLIED WARRANTY OR CONDITION LASTS, SO THE ABOVE MAY NOT APPLY TO YOU. THE EXPRESS WARRANTIES MADE IN THIS WARRANTY ARE EXCLUSIVE AND MAY NOT BE ALTERED, ENLARGED, OR CHANGED BY ANY DISTRIBUTOR, DEALER, OR OTHER PERSON, WHATSOEVER.

CARRIER CORPORATION • Syracuse, New York 13221

Form No. U.E.D. 1855 (Rev 5/09) Catalog No. 590-033

THIS WARRANTY DOES NOT COVER:

1. Labor or other costs incurred for diagnosing, repairing, removing, installing, shipping, servicing or handling of either defective parts, or replacement parts, or new units.
2. Any product purchased over the Internet.
3. Normal maintenance as outlined in the installation and servicing instructions or Owner's Manual, including filter cleaning and/or replacement and lubrication.
4. Failure, damage or repairs due to faulty installation, misapplication, abuse, improper servicing, unauthorized alteration or improper operation.
5. Failure to start due to voltage conditions, blown fuses, open circuit breakers, or damages due to the inadequacy or interruption of electrical service.
6. Failure or damage due to floods, winds, fires, lightning, accidents, corrosive environments (rust, etc) or other conditions beyond the control of Company.
7. Damage due to freezing of water, inadequate or interrupted water supply, use of corrosive water or rearrangement of plumbing system.
8. Parts not supplied or designated by Company, or damages resulting from their use.
9. Products installed outside the U.S.A. or its territories and Canada.
10. Electricity or fuel costs, or increases in electricity or fuel costs from any reason whatsoever, including additional or unusual use of supplemental electric heat.
11. Any cost to replace, refill or dispose of refrigerant, including the cost of refrigerant.
12. **ANY SPECIAL, INDIRECT OR CONSEQUENTIAL PROPERTY OR COMMERCIAL DAMAGE OF ANY NATURE WHATSOEVER.**

Some states or provinces do not allow the exclusion of incidental or consequential damages, so the above limitation may not apply to you.

Name of Owner _____ Unit Model _____ Date of Installation _____

Address of Installation _____

Unit Serial No. _____ Installed by _____