IOM

PROJECT: **VA – Renovate Logistics – B1**

LOCATION: **Fayetteville, AR**

ENGINEER: **Harrell Design Group**

MECHANICAL CONTRACTOR: **Comfort Systems**

EQUIPMENT: **Humidifier**
Tagged: 1-HUM-LOG

DATE: **June 12, 2026**

Josh Davis
josh@airetechcorp.com
(479) 756-8600

3241 W. Huntsville Avenue ● Springdale, AR 72762
Voice (479)756-8600 ● Fax (479)751-0576

1506160-I EN 2512

AM SERIES

Read and save these instructions.
This manual to be left with the equipment.

INSTALLATION AND OPERATION MANUAL

Steam Humidifier
Condair **Live Steam**

Humidification, Dehumidification
and Evaporative Cooling

condair

Thank you for choosing Condair

Installation date (MM/DD/YYYY):

Commissioning date (MM/DD/YYYY):

Site:

Model:

Serial number:

Contact

Condair Ltd.
2740 Fenton Road, Ottawa, Ontario K1T3T7
TEL: 1.866.667.8321, FAX: 613.822.7964
EMAIL: na.info@Condair.com, WEBSITE: www.Condair.com

Proprietary Notice

This document and the information disclosed herein are proprietary data of Condair Ltd. Neither this document, nor the information contained herein shall be reproduced, used, or disclosed to others without the written authorization of Condair Ltd., except to the extent required for installation or maintenance of recipient's equipment.

Liability Notice

Condair Ltd. does not accept any liability due to incorrect installation or operation of the equipment or due to the use of parts/components/equipment that are not authorized by Condair Ltd.

Copyright Notice

© 2025 Condair Ltd. All rights reserved.

Technical modifications reserved

Contents

1	**Introduction**	**4**
1.1	Before You Begin	4
1.2	Notes on the Installation and Installation and Operation Manual	4
2	**For Your Safety**	**6**
3	**Installation**	**8**
3.1	Receiving and Unpacking Equipment	8
3.2	Location of the humidifier in an air conditioning system	8
3.2.1	Up flow affect	8
3.2.2	System 1 - Air Handling Unit	10
3.2.3	System 2 - In Duct Near An Elbow	11
3.2.4	System 3 - Multi-Zone System	12
3.2.5	System 4 - Dual Duct	13
3.2.6	System 5 - Primary And Secondary Distributors	13
3.3	Pressurized Condair SAM-e	14
3.3.1	Plumbing	14
3.4	Installing Actuator To Steam Valve	14
3.4.1	Installing Belimo Actuator to Belimo Steam Valve - BGVL Kit	16
3.4.2	Installing Belimo Actuator on Schneider Valve - SGVL Kit	18
3.4.3	Installing Belimo Actuator on Warren Control Valve - UGVL Kit	20
3.5	Condair SAM-e with Pressure Steam	26
3.5.1	Pressurized Plumbing with External Separator	26
3.5.2	Pressurized Plumbing without External Separator	27
3.5.3	Pressurized Plumbing Drain Options	28
3.6	Condair Mini SAM-e with Pressurized Steam	29
3.6.1	Condair Mini SAM-e Pressurized with External Separator	29
3.6.2	Condair Mini SAM-e Pressurized without External Separator	30
4	**Maintenance**	**31**
4.1	Elements Of LiveSteam Humidifier	31
4.2	Maintenance Schedule	32
5	**Troubleshooting**	**33**
5.1	Troubleshooting Guide	33
5.2	Valve Cross Reference Table	34
5.3	Actuator Close-Off Pressure	35

1 Introduction

1.1 Before You Begin

Thank you for purchasing the **Condair LiveSteam system**.

The Condair LiveSteam system incorporates the latest technical advances and meets all recognized safety standards. Nevertheless, improper installation and use of the Condair LiveSteam system may result in danger to the user or third parties and/or damage to property.

To ensure a safe, proper, and economical operation of the Condair LiveSteam system, please observe and comply with all information and safety instructions contained in the present documentation as well as in the separate documentations of the components installed in the Condair LiveSteam system.

If you have questions after reading this documentation, please contact your Condair representative. They will be glad to assist you.

1.2 Notes on the Installation and Installation and Operation Manual

Limitation

The subject of this installation and operation manual is the Condair LiveSteam system in its different versions. The options and accessories are only described insofar as is necessary for proper installation and operation of the equipment. Further information on options and accessories can be obtained in their respective instructions.

This installation and operation manual is restricted to the **installation** of the Condair LiveSteam system and is meant for **well trained personnel being sufficiently qualified for their respective work**.

This installation and operation manual is supplemented by various separate items of documentation, which are included in the delivery as well. Where necessary, appropriate cross-references are made to these publications in this installation and operation manual.

Symbols used in this manual

CAUTION!

The catchword "CAUTION" used in conjunction with the general caution symbol designates notes in this installation and operation manual that, if neglected, may cause **damage and/or malfunction of the unit or damage to property**.

WARNING!

The catchword "WARNING" used in conjunction with the general caution symbol designates safety and danger notes in this installation and operation manual that, if neglected, may cause **injury to persons**.

DANGER!

The catchword "DANGER" used in conjunction with the general caution symbol designates safety and danger notes in this installation and operation manual that, if neglected, may lead to **severe injury or even death of persons**.

Safekeeping

Please safeguard this installation and operation manual in a safe place, where it can be immediately accessed. If the equipment changes hands, the documentation must be passed on to the new operator.

If the documentation gets misplaced, please contact your Condair representative for replacement.

2 For Your Safety

General

Every person, who is in charge of work on the Condair LiveSteam system must have read and understood this installation and operation manual before carrying out any work.
Knowing and understanding the contents of the installation and operation manual is a basic requirement for protecting personnel against any kind of danger, to prevent faulty installation, and to operate the unit safely and correctly.

All icons, signs and markings applied to the Condair LiveSteam system must be observed and kept in readable state.

Qualification of personnel

All work described in this installation and operation manual **may only be carried out by specialists who are well trained and adequately qualified and are authorized by the customer**.
For safety and warranty reasons any action beyond the scope of this manual must be carried out only by qualified personnel authorized by Condair.

It is assumed that all persons working with the Condair LiveSteam system are familiar and comply with the appropriate regulations on work safety and the prevention of accidents.

Intended use

The Condair LiveSteam system is intended exclusively for steam distribution in air conditioning systems within specified operating conditions). Any other type of application, without the written consent of Condair, is considered as not conforming with the intended purpose and may lead to hazardous operation of the Condair LiveSteam system and will void any warranty.
Operation of the equipment in the intended manner requires **that all the information contained in this installation and operation manual are observed (in particular the safety instructions)**.

General safety notes

CAUTION!
Installation

- **Do not mount on hot surfaces.**
- **Do not mount in area where freezing can occur.**
- **Do not mount on vibrating surface.**
- **Do not mount on floor.**
- **LiveSteam system produces steam at atmospheric pressure no devices which could block steam output should be connected to the steam outlet.**
- **Steam lines must be installed so that no restriction can produce backpressure in the humidifier.**
- **Regardless of selecting on/off or modulating control method, Condair humidifiers must have a closed circuit across its on/off security loop control terminal to operate. Condair highly recommends the use of a duct high limit humidistat.**

CAUTION!
Plumbing

- **Plumbing to be performed by a licensed plumber.**
- **Drain water from humidifier can be very hot. Do not drain to public sink.**
- **All plumbing work should be done according to local plumbing code.**

CAUTION!
Servicing

- **Disconnect main power before any servicing.**
- **The plumbing and electrical compartments contain high voltage components and wiring. Access should be limited to authorized personnel only.**
- **During and following operation of the humidifier, the steam and components in contact with the steam such as the blower pack, steam lines, steam distributors, and condensate lines can become hot and can burn if touched.**
- **Condair does not accept any liability for installations of humidity equipment installed by unqualified personnel or the use of parts/components/equipment that are not authorized or approved by Condair.**

CAUTION!
Electrical

- **All electrical work should be done according to local and national electrical code.**
- **Electrical connection to be performed by a licensed electrician.**

Preventing unsafe operation

All persons working with the Condair LiveSteam system are obliged to report any alterations to the unit, modifications, or unsafe issues that may affect safety to the owner without delay and to **secure the Condair LiveSteam system against accidental power-up**.

Prohibited modifications to the unit

No modifications must be undertaken on the Condair LiveSteam system without the express written consent of Condair.

For the replacement of defective components use exclusively **original accessories and spare parts** available from your Condair representative.

3 Installation

3.1 Receiving and Unpacking Equipment

- Check packing slip to ensure ALL material has been delivered.
- All material shortages are to be reported to Condair within 48 hours from receipt of goods. Condair assumes no responsibility for any material shortages beyond this period.
- Inspect shipping boxes for damage and note damages on shipping waybill accordingly.
- After unpacking, inspect equipment for damage and if damage is found, notify the shipper promptly.
- All Condair products are shipped on an FOB factory basis. Any and all damage, breakage or loss claims are to be made directly to the shipping company.

3.2 Location of the humidifier in an air conditioning system

Reference the following systems for humidifier location

3.2.1 Up flow affect

The up flow affect is a result of the air velocity versus the steam velocity leaving the orifices of the distributor. The air velocity is a product of the volume flow rate through a present cross sectional area. The steam velocity leaving the orifices is directly proportional on the internal pressure, inside the distribution tube. This pressure is reduced when two or more distributors are in use.

The following up flow guidelines has been established from testing:

Velocity	Inlet Steam Pressure	Up Flow Distance
500	15	2 ft
1000	15	1 ft
500	30	4 ft
1000	30	2 ft

These up flow distances are only guidelines. Every application presents a multitude of variables which may shorten or lengthen the up flow distance. The location of the distributor may need to be changed if condensation occurs.

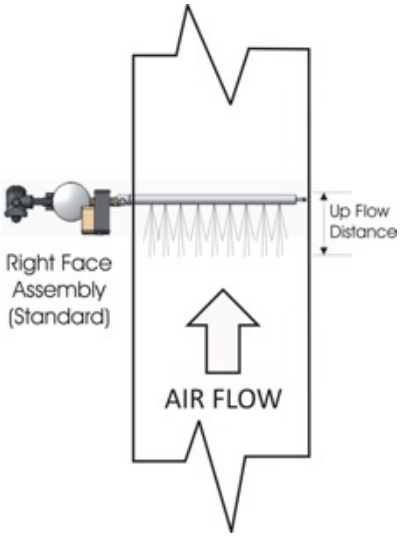

Fig. 1: Up flow distance (top view)

3.2.2 System 1 - Air Handling Unit

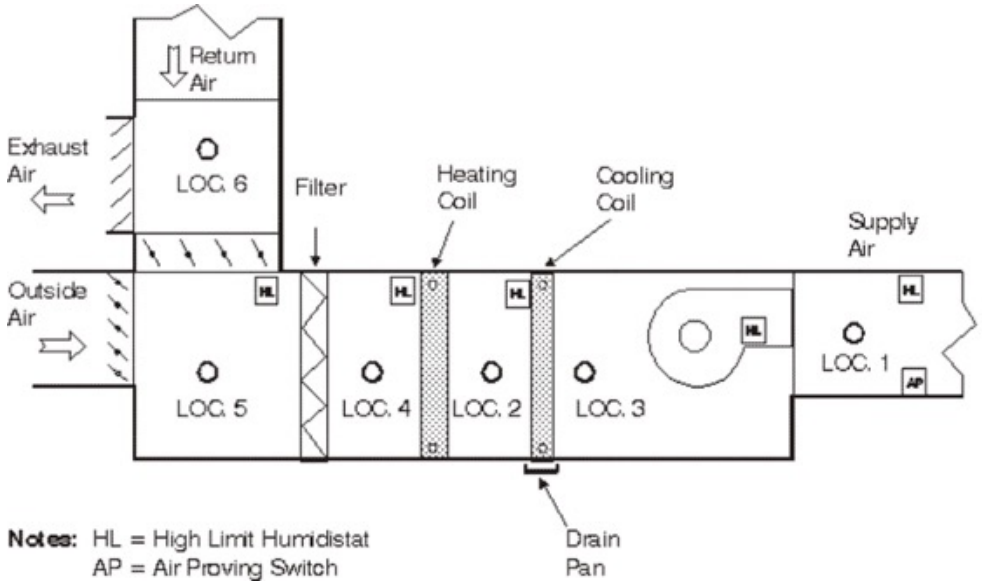

Fig. 2: Air Handling Unit

Table 1: Air Handling Unit

Location	Advantages	Disadvantages
LOC. 1	MOST recommended. Assuming there is sufficient straight duct for absorption.	High velocity may create long absorption distances.
LOC. 2	Warm air from heating coil. Good absorption will help evaporate steam.	Cooling coils designed for water. Possible capacity drop due to condensation on the coil.
LOC. 3	Warm air. Good absorption.	If absorption distance is too long it may wet the fan.
LOC. 4	Heating coils will help evaporate steam. Air is mixed well.	Absorption may be a problem. No drain pan on heating coil. Cold air.
LOC. 5	Not Recommended.	Filters may get saturated. Cold air.
LOC. 6	Not Recommended.	Outside air may cause condensation problems. Problematic RH control.

3.2.3 System 2 - In Duct Near An Elbow

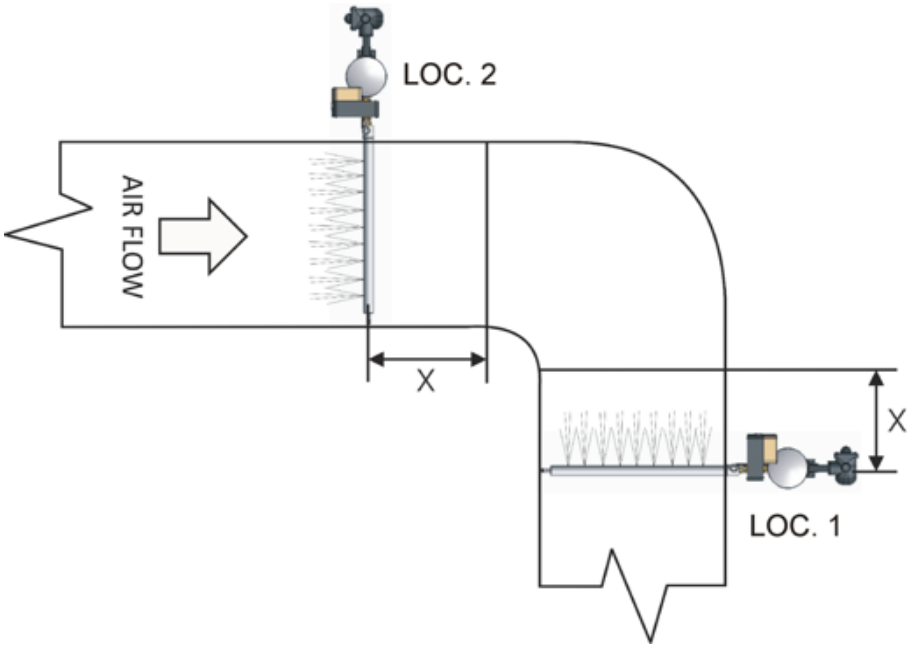

Note: If not calculated, dimension "X" is minimum 6' before or after bend or transition. See up flow effect on page 6 for calculation.

Fig. 3: In Duct Near An Elbow

Table 2: In Duct Near An Elbow

Location	Advantages	Disadvantages
LOC. 1	MOST recommended. More air on the outside of the turn.	Uneven air flow in the duct.
LOC. 2	Even air flow over the whole duct.	Possibility of wetting of the turning vanes.

Warning: This type of distributor may produce a whistling noise as the pressurized steam decompresses within the distributor and is introduced into the airstream. This noise may be increased with higher pressure applications. For noise dampening recommendations, please consult the factory.

3.2.4 System 3 - Multi-Zone System

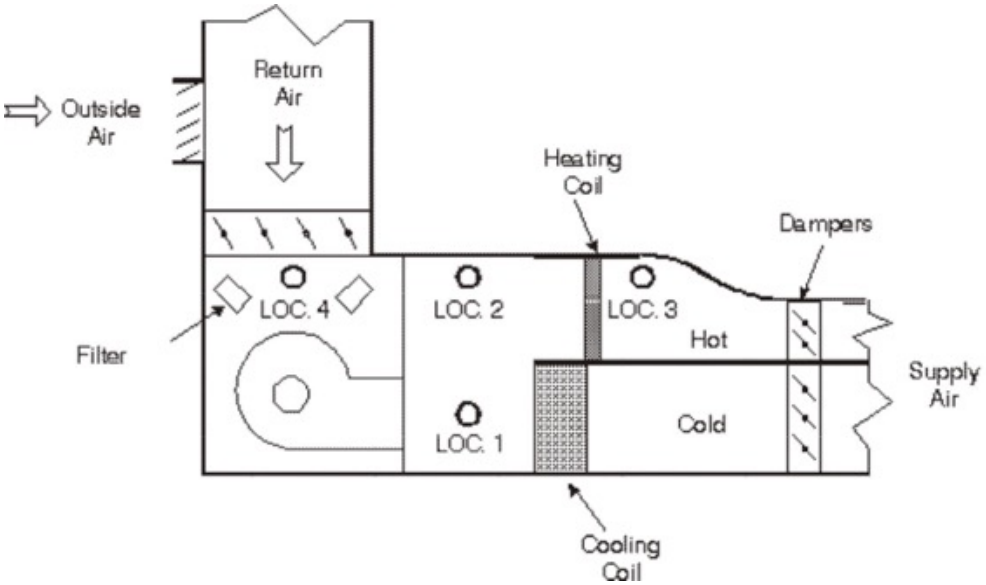

Fig. 4: Multi-zone System

Table 3: Multi-zone System

Location	Advantages	Disadvantages
LOC. 1	Maximum absorption distance to dampers.	Possible loss of capacity to condensate on cooling coils.
LOC. 2	Heating coil will help absorb steam.	Minimum distance to the dampers could result in wetting.
LOC. 3	Warm air.	Minimum distance to the dampers could result in wetting.
LOC. 4	Not recommended.	Filters may get saturated. Cold air.

If one zone requires most of the air quantity supplied to the system, this zone should be the location for the humidifier. Humidity will eventually equalize when the system has been in operation for a while.

3.2.5 System 4 - Dual Duct

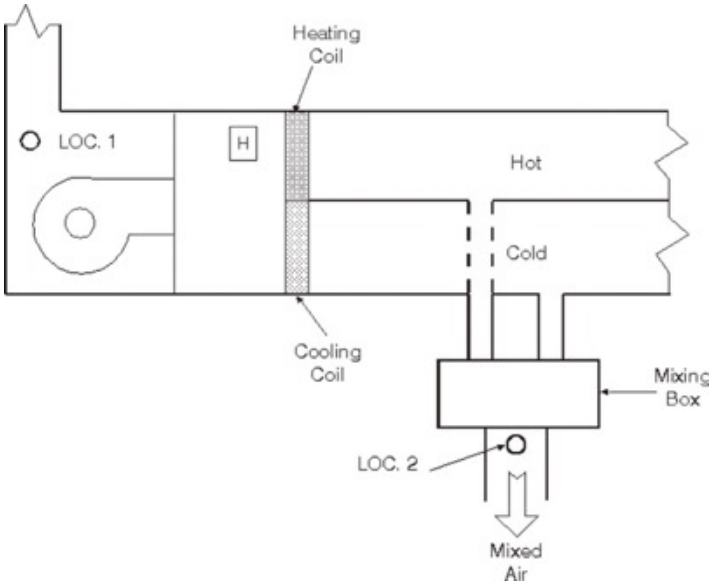

Fig. 5: Dual Duct

This system usually requires two steam distributors. The primary load (LOC.1) will go upstream of the fan. The humidistat is located after the fan and before the hot and cold decks. The secondary load (LOC. 2) will go downstream to the mixing boxes and will be controlled by a humidistat in the space. Please consult your Condair agent if absorption distance is a problem. High limit humidistat is recommended in the mixed air duct.

3.2.6 System 5 - Primary And Secondary Distributors

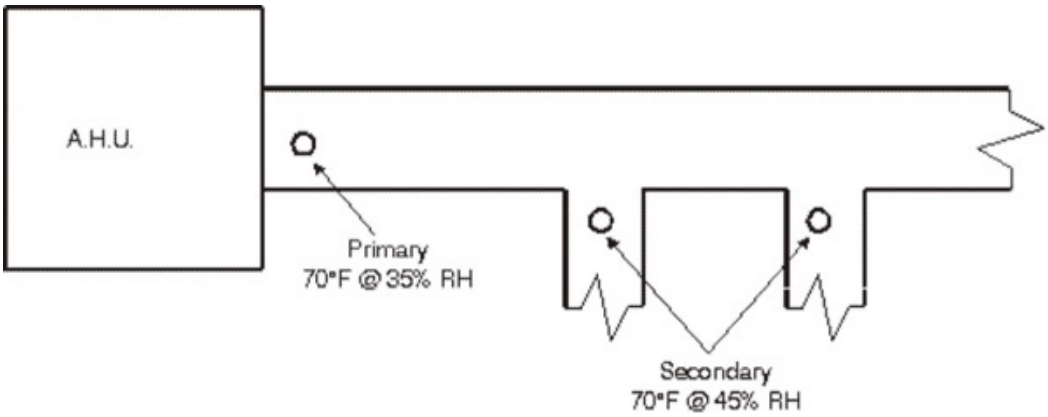

Fig. 6: Primary and Secondary Distributors

On occasion you may need a secondary load to reach a higher RH level in one part of your operation (i.e. Hospitals). In this case, the primary load will maintain the normal space condition (70°F at 35% RH) and the secondary load will satisfy the higher RH level (70°F at 45% RH) needed for that zone. High limit humidistats are recommended for each duct.

3.3 Pressurized Condair SAM-e

3.3.1 Plumbing

Steam Line

WARNING!

Proper design and sizing of steam lines should be performed by a qualified technician.

Condensate Return Line

When pressurized steam (2-50 psi) enters the Condair SAM-e, steam expansion reduces pressure down to almost atmospheric pressure. Therefore condensate cannot be lifted after the F+T trap. A high temperature condensate pump may be used to achieve this.

Condensate from the Condair SAM-e must always be returned to an atmospheric condensate return main.

Long condensate runs (more than 20 ft.) should be oversized for better flow. Refer to *Figure 33* and *Figure 34*.

For proper trap installation, refer to *Figure 15*.

3.4 Installing Actuator To Steam Valve

Dura Drive P/N	Condair P/N	Assembly Instructions
MS51-7203 DURA DRIVE ACTUATOR	150 7552: 0-10VDC 150 7553: 4-20mA 150 7554: On/Off	For 1-1/2" Bronze Valve for incoming pressures from 35 to 50 psi, and 2" Bronze Valve for incoming pressures from 20 to 50 psi.

LiveSteam Steam Injection Humidifier
Start-up Checklist

General Information

Humidifier Serial number: _____ Tag / Zones Served: _____

Humidifier Steam Pressure: _____psig

Actuator Control Signal: ☐ 0 - 10 Vdc ☐ 4 - 20 mA ☐ On/Off

Inspection

☐ Manual shutoff valve installed upstream of wye strainer
☐ Piping connected securely
☐ Plug installed and tight on wye strainer
☐ Steam traps installed
☐ Steam traps primed (bucket trap only)
☐ Actuator installed correctly (see attached sheet)
☐ Controls wired

Start-up Procedure

1. Open manual valve slowly allowing steam to enter.
2. Flush lines of existing condensate and debris.
3. Clean strainer screen.
4. When system has warmed allow valve to full open position.
5. Ensure that Pressure Reducing Valve (PRV) is functioning correctly, and pressure does not exceed max listed on separator.
6. Inspect for leaks in piping.
7. Apply signal to actuator, inspect valve motion for smooth operation.
8. Test controls, including high limit and air-proving switch (if applicable).
9. Inspect distributor for leaks.
10. Shut system off at manual valve and when safe empty strainer screen.
12. Reopen valve slowly to warm system and leave valve at full open.
13. Set controls to automatic.
14. System is ready to operate.

Certification

☐ Steam system installed in accordance with local codes
☐ Steam piping is free of leaks
☐ Actuator correctly installed and stroked
☐ Controls functioning properly

Installed by:	_____ (Company Name and Business Address)	
Inspected by:	_____ (Company Name and Business Address)	
Signed:	_____ (Inspector Signature)	Date: _____

3.4.1 Installing Belimo Actuator to Belimo Steam Valve - BGVL Kit

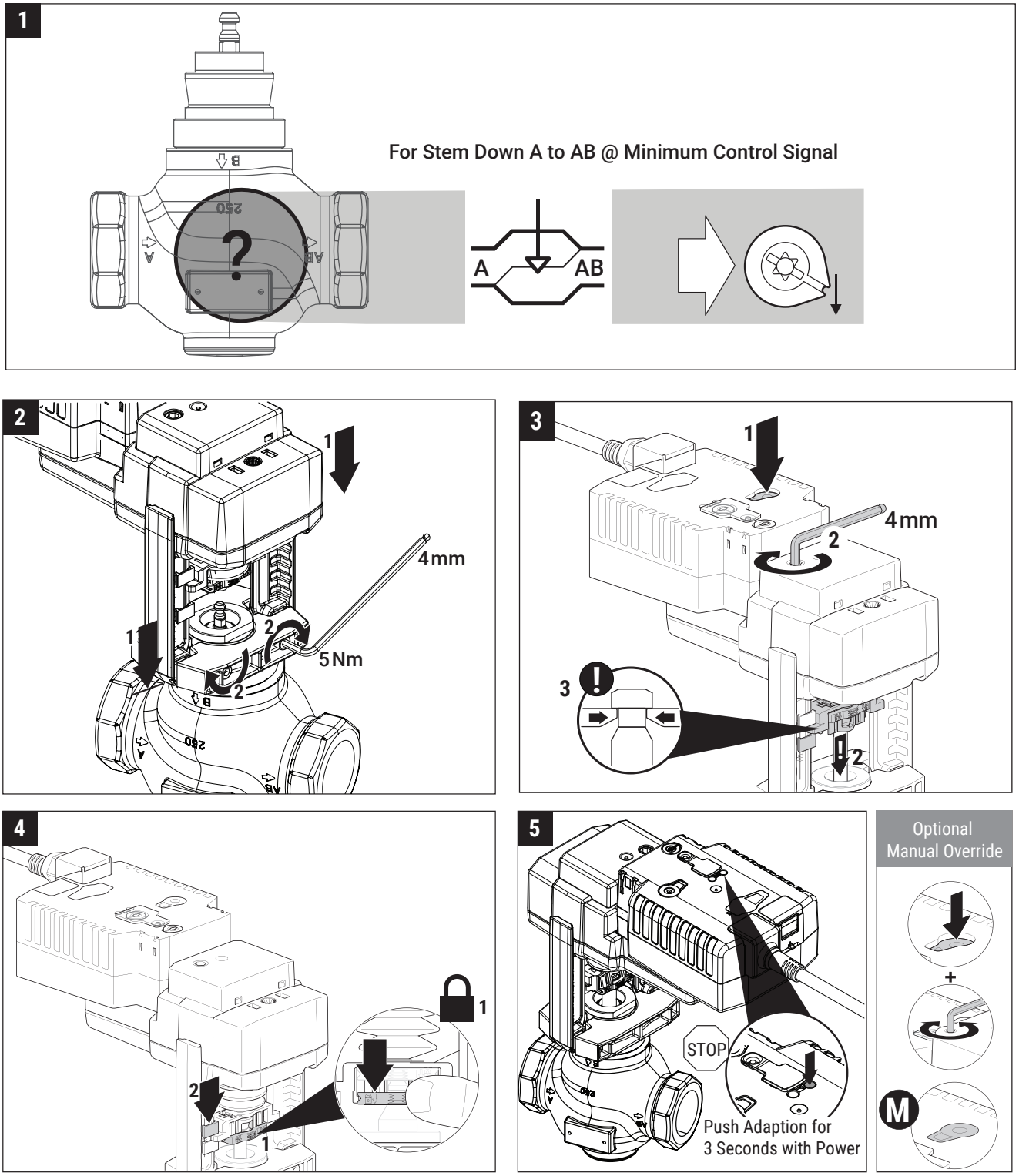

Electronic Fail-Safe Actuator with MFT

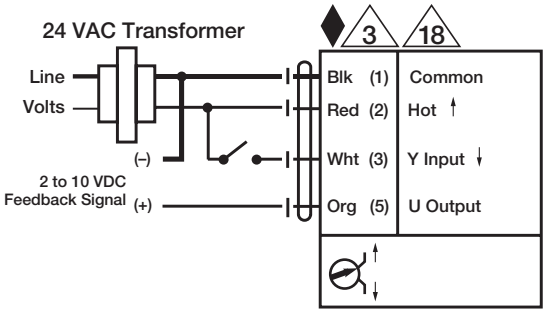

On/Off

Notes:

- Meets cULus requirements without the need of an electrical ground connection
- 3 Actuators may also be powered by 24 VDC.
- 18 Actuators with plenum rated cable do not have numbers on wires; use color codes instead.

ORG	Orange	Anaranjado	Orange	Alaranjado
WHT	White	Blanco	Blanc	Branco
RED	Red	Rojo	Rouge	Vermelho
BLK	Black	Negro	Noir	Preto

3.4.2 Installing Belimo Actuator on Schneider Valve - SGVL Kit

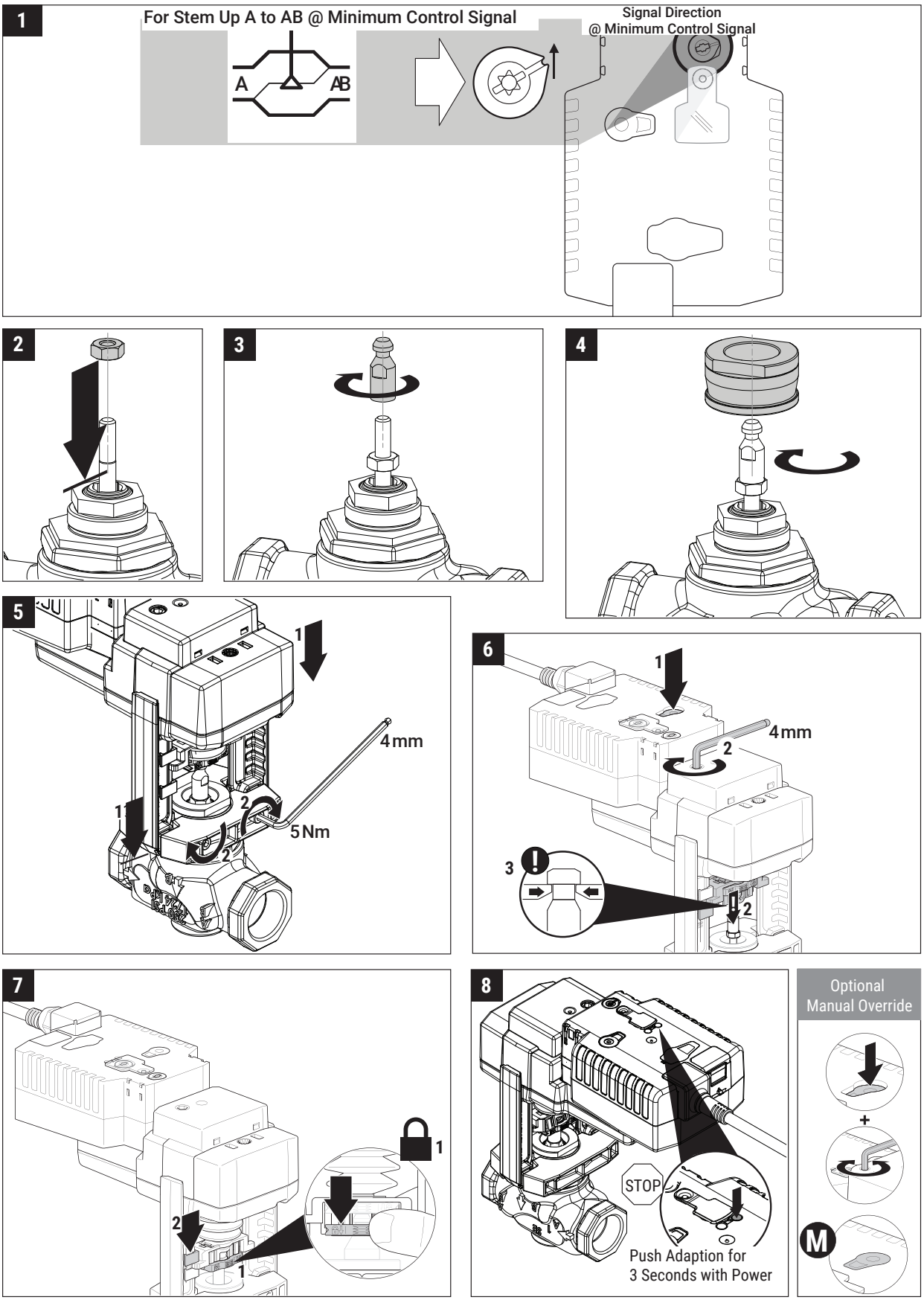

Electronic Fail-Safe Actuator with MFT

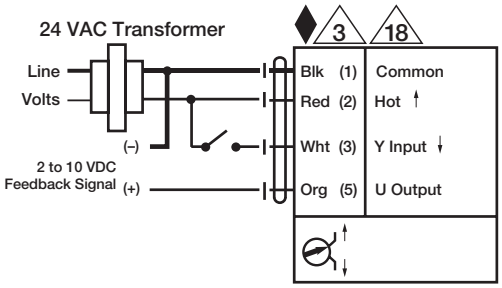

On/Off

Notes:

- Meets cULus requirements without the need of an electrical ground connection
- Actuators may also be powered by 24 VDC.
- Actuators with plenum rated cable do not have numbers on wires; use color codes instead.

BLK	RED	WHT	ORG
Black	Red	White	Orange
Negro	Rojo	Blanco	Anaranjado
Noir	Rouge	Blanc	Orange
Preto	Vermelho	Branco	Alaranjado

3.4.3 Installing Belimo Actuator on Warren Control Valve - UGVL Kit

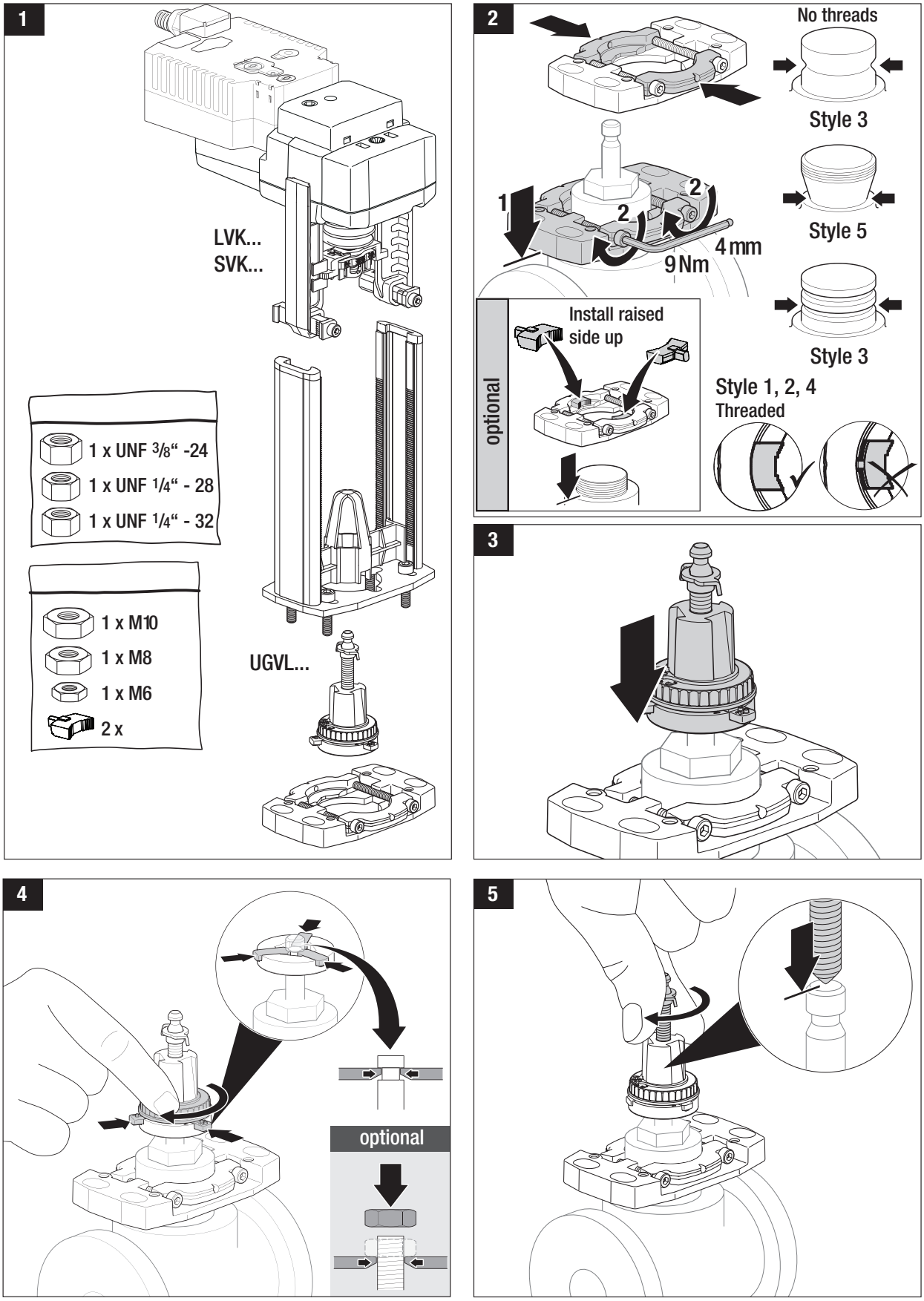

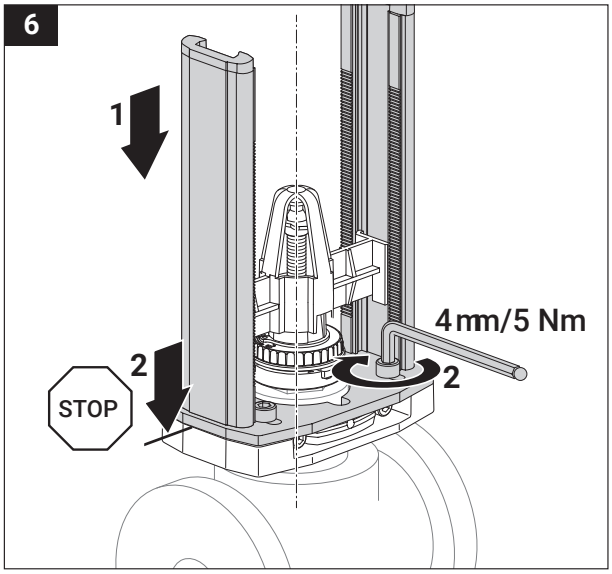
6
1
2
STOP
4 mm/5 Nm
2

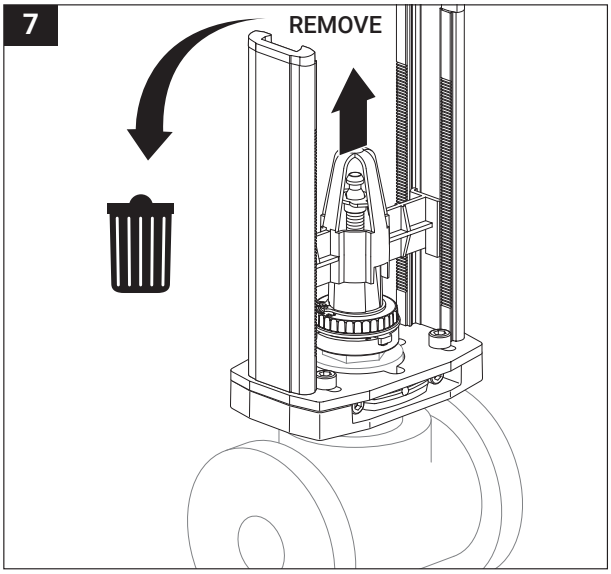
7
REMOVE

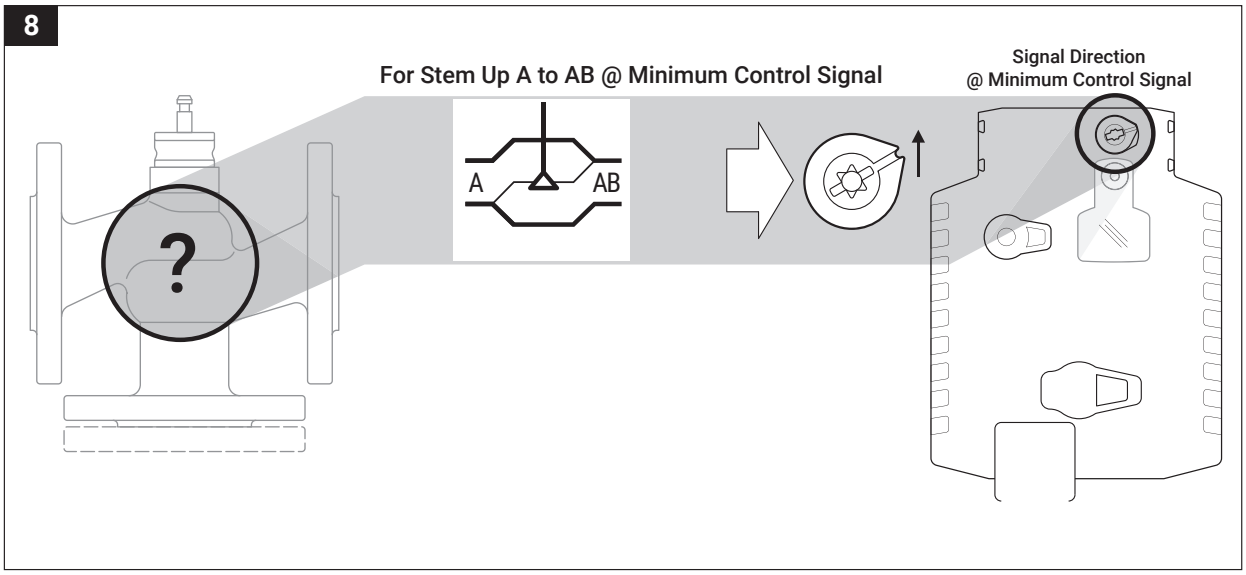
8
For Stem Up A to AB @ Minimum Control Signal
Signal Direction
@ Minimum Control Signal
?
A
AB

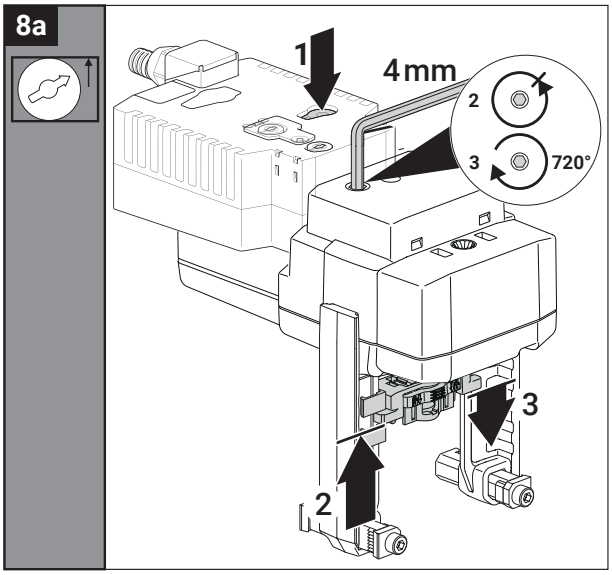
8a
1
4 mm
2
3
720°
3
2

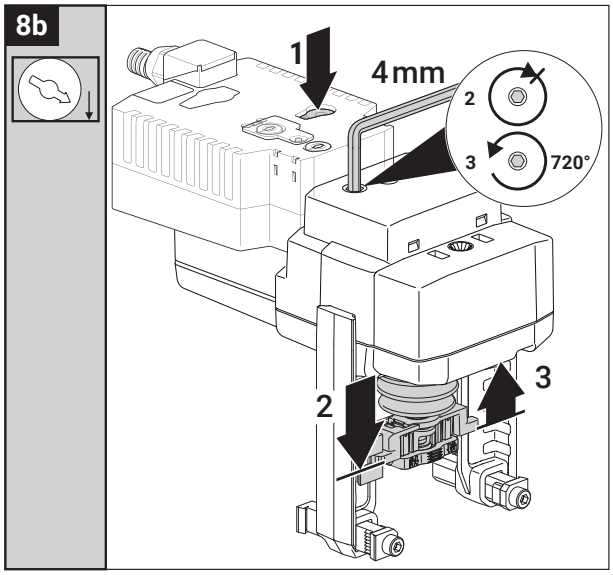
8b
1
4 mm
2
3
720°
2
3

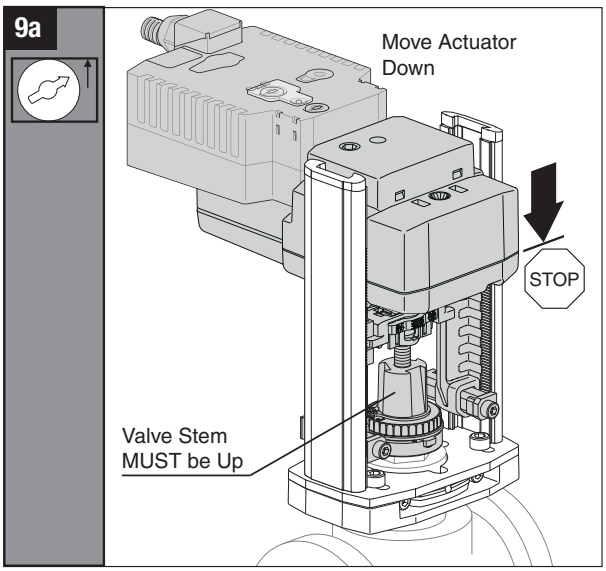
9a
Move Actuator
Down
STOP
Valve Stem
MUST be Up

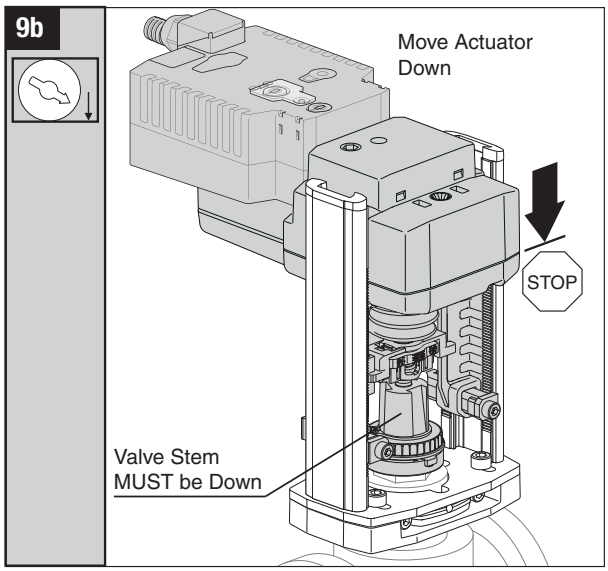
9b
Move Actuator
Down
STOP
Valve Stem
MUST be Down

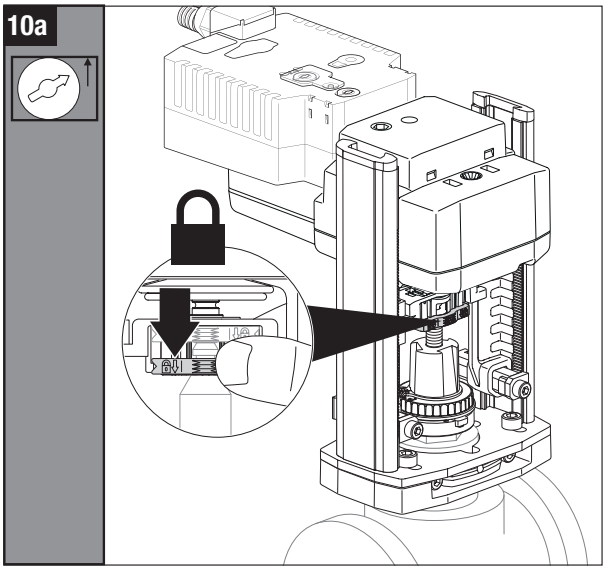
10a

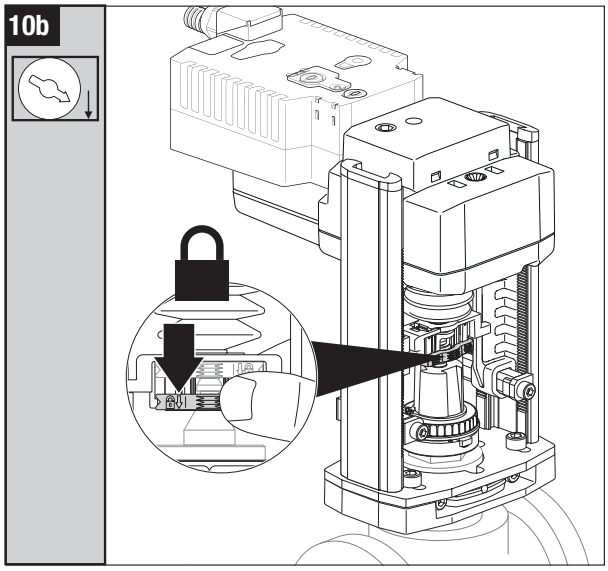
10b

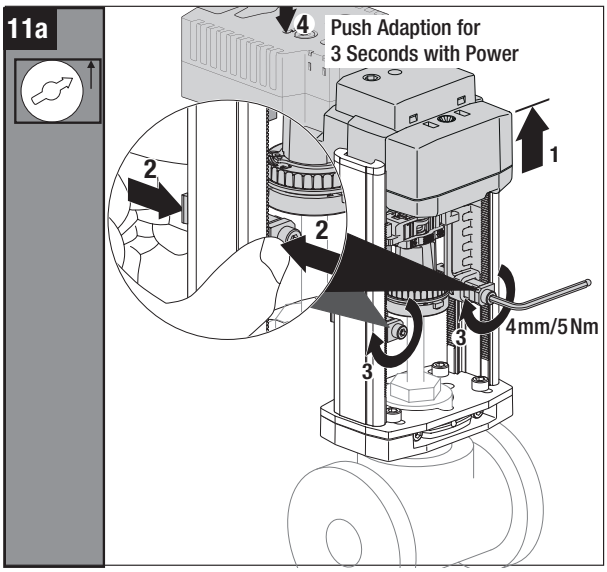
11a
4
Push Adaption for
3 Seconds with Power
1
2
2
3
3
4mm/5Nm

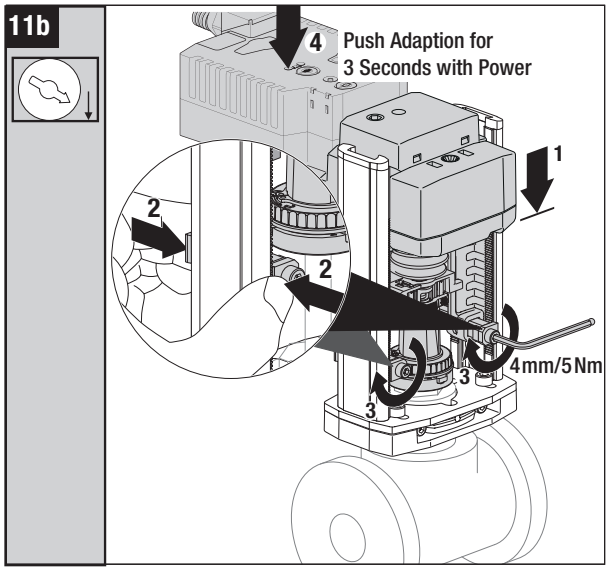
11b
4
Push Adaption for
3 Seconds with Power
1
2
2
3
3
4mm/5Nm

Electronic Fail-Safe Actuator with MFT

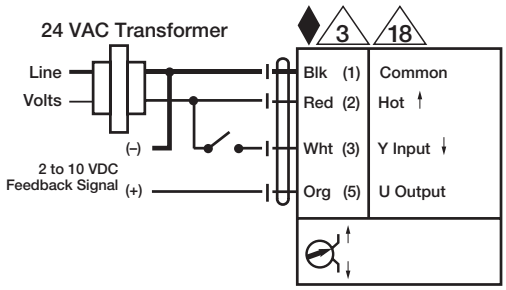

On/Off

Notes:

- Meets cULus requirements without the need of an electrical ground connection
- 3 Actuators may also be powered by 24 VDC.
- 18 Actuators with plenum rated cable do not have numbers on wires; use color codes instead.

BLK	RED	WHT	ORG
Black	Red	White	Orange
Negro	Rojo	Blanco	Anaranjado
Noir	Rouge	Blanc	Orange
Preto	Vermelho	Branco	Alaranjado

0-10V DIGITAL HUMIDISTAT

Wiring Diagram for Livesteam

Part #	Description
1510142	0-10V Digital Wall Humidistat
2520266	0-10V Digital Duct Humidistat pkg.

Warning: Failure to wire the humidistat in accordance with the wiring diagram could permanently damage the electronics. Such errors will void the warranty.

Cabling between controls and unit should be shielded 18 AWG

HUMIDISTAT TO ACTUATOR CONNECTIONS

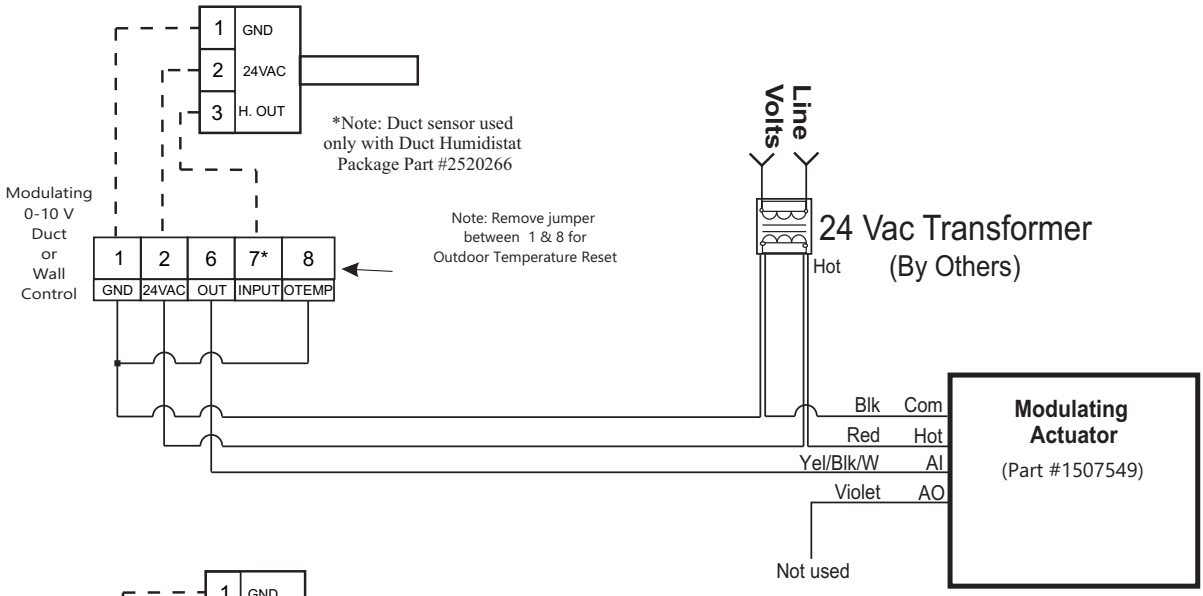

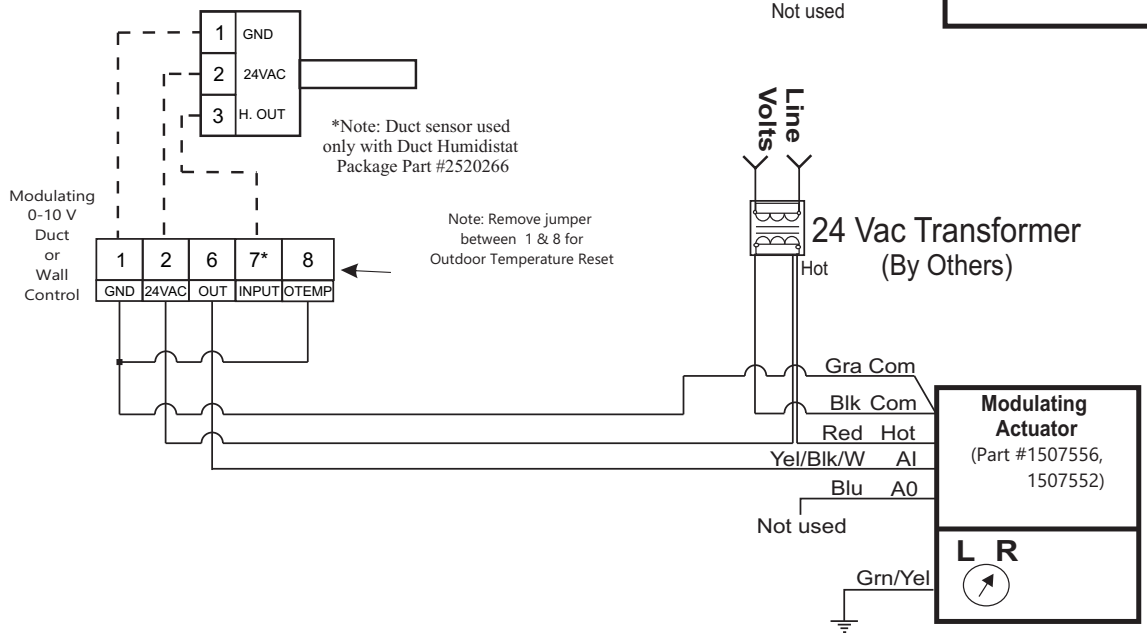

condair

0-10V Digital Humidistat for LiveSteam

Wiring Diagram/Installation Instruction

Part Number: 2520531 **Revision: F** **Date:** 2023.06.19

Wiring Diagram for LiveSteam

Modulation Control with On/Off Inputs

Warning: Failure to wire the humidistat in accordance with the wiring diagram could permanently damage the electronics. Such errors will void the warranty.

Cabling between controls and unit should be shielded 18 AWG

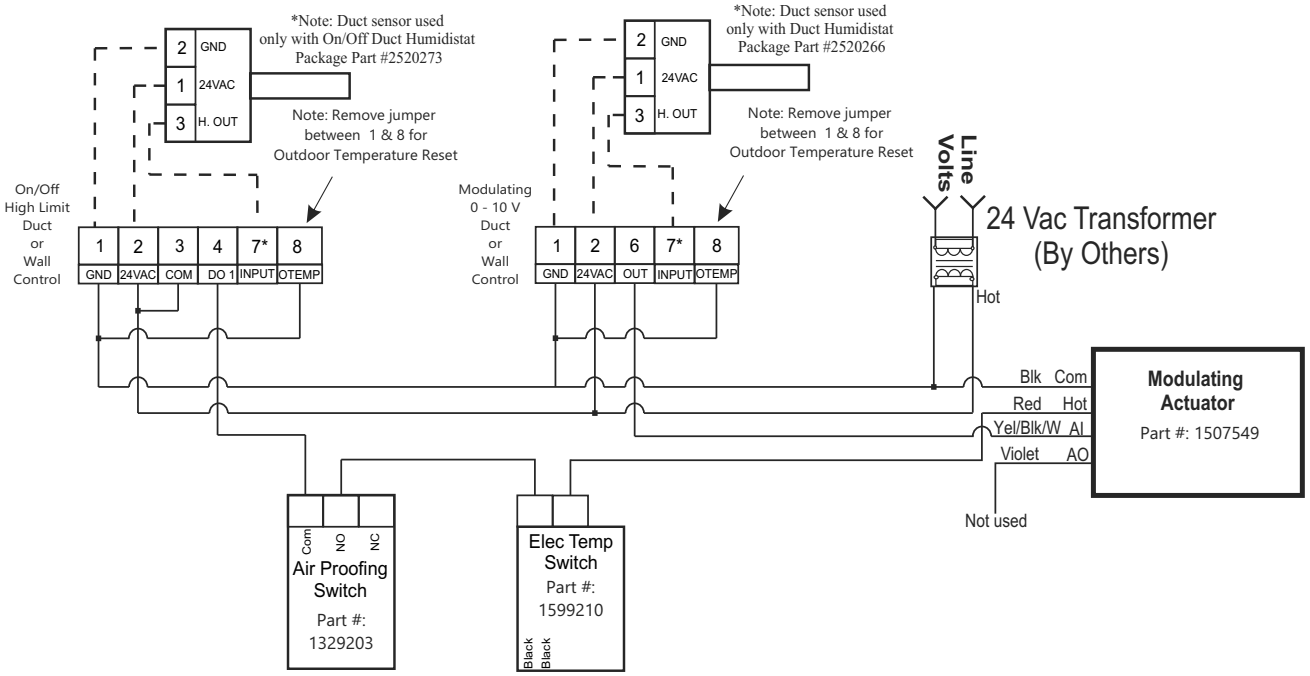

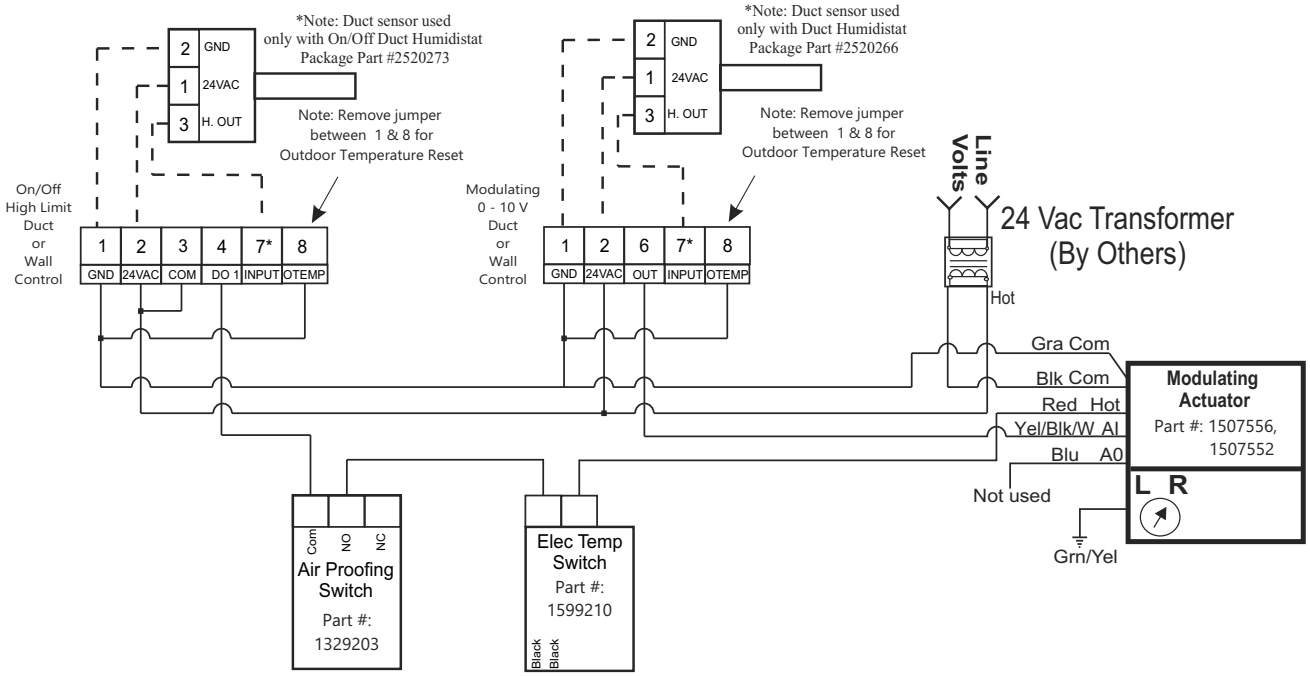

Controls for LiveSteam Application

Wiring Diagram/Installation Instruction

Part Number: 2571675 **Revision: D** **Date:** 19/06/2023

3.5 Condair SAM-e with Pressure Steam

3.5.1 Pressurized Plumbing with External Separator

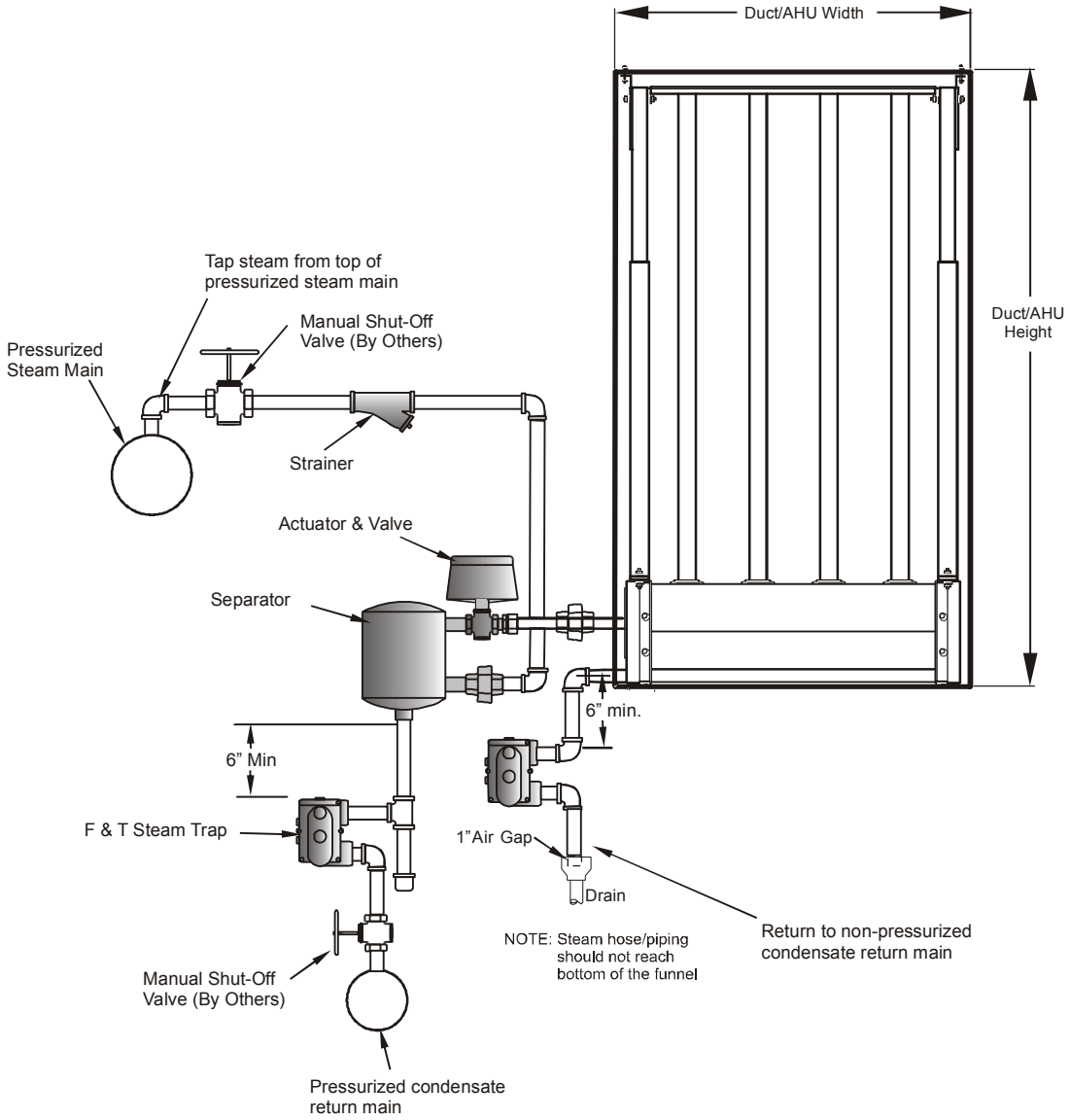

Fig. 7: Pressurized Plumbing with External Separator

- Steam components in grey are provided by Condair.
- Tap steam from top of pressurize steam main to avoid excess condensate.
- Condensate from separator to be returned to pressurized condensate main.
- Condensate from Condair SAM-e to be returned to atmospheric floor drain.

When pressurized steam enters the Condair SAM-e, the pressure drops down to almost atmospheric pressure. Therefore, it must be drained atmospherically, and the use of a condensate pump (rated for 212 °F) must be used to raise the condensate to a higher elevation.

3.5.2 Pressurized Plumbing without External Separator

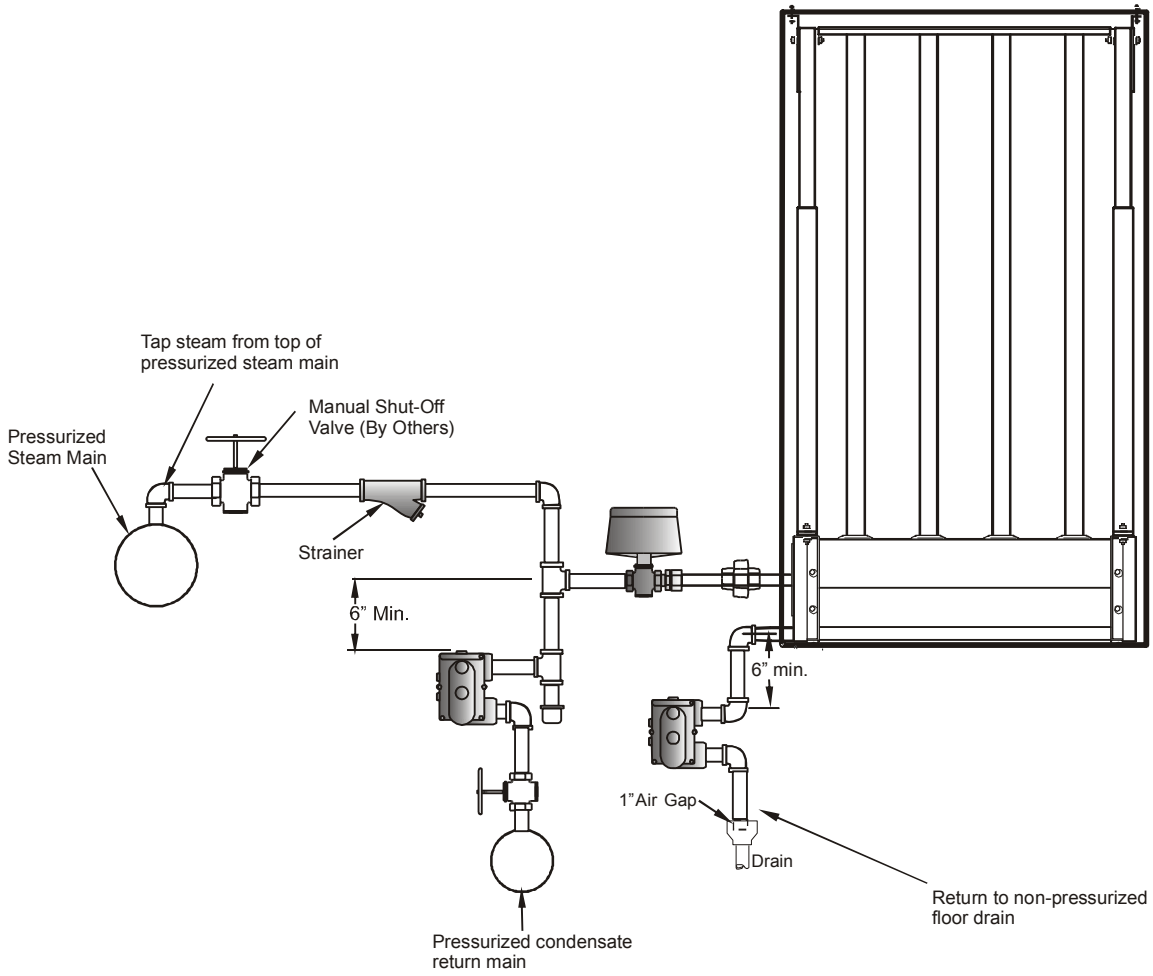

Fig. 8: Pressurized Plumbing without External Separator

Note: The Condair SAM-e header functions as a steam separator, therefore an external steam separator is not required.

- Steam components in grey are provided by Condair.
- Tap steam from top of pressurize steam main to avoid excess condensate.
- Condensate from Condair SAM-e to be returned to atmospheric floor drain.

When pressurized steam enters the Condair SAM-e, the pressure drops down to almost atmospheric pressure. Therefore, it must be drained atmospherically, and the use of a condensate pump (rated for 212 ºF) must be used to raise the condensate to a higher elevation.

3.5.3 Pressurized Plumbing Drain Options

Note: When pressurized steam enters the Condair SAM-e, the pressure drops down to near-atmospheric pressure. Thus, the unit must be drained atmospherically and a condensate pump (rated for 212 ºF) must be used to elevate the condensate to a higher point.

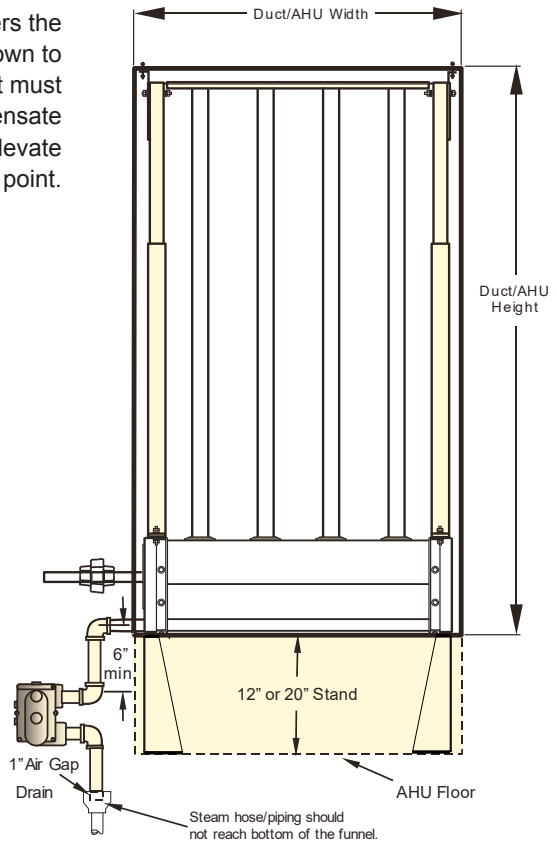

Return to non-pressurized condensate return main.
When using a pump for pressurizing the condensate to pressurized condensate return main, the F&T trap and air gap are not needed.

OR

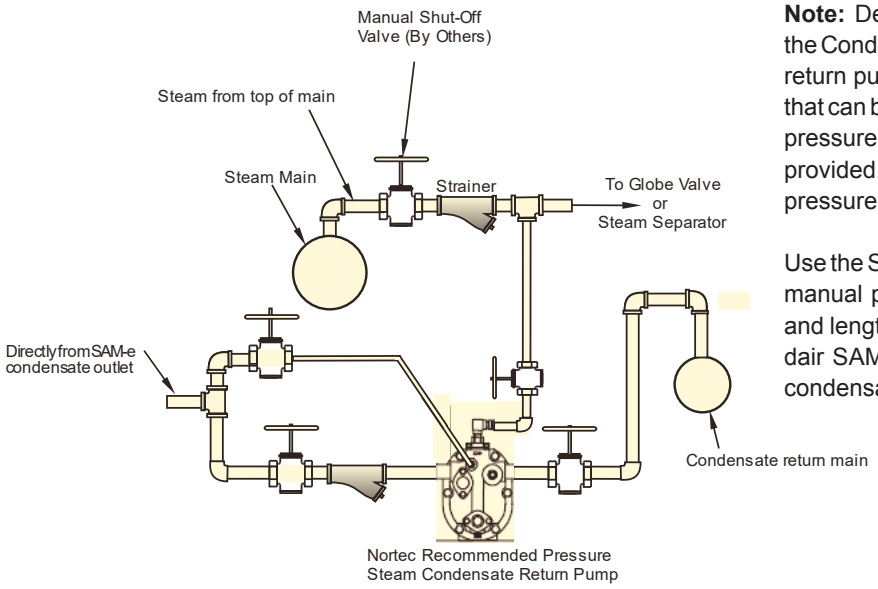

Note: Delta Supply pressure to exhaust pressure to the Condair recommended pressure steam condensate return pump will determine the amount of condensate that can be lifted. Minimum and maximum supply steam pressure can be found in the manufacturer's manual provided. Ensure the pump is receiving sufficient steam pressure to operate with your application.

Use the Size of Reservoir table from the manufacturer's manual provided to determine the reservoir diameter and length. The length is the pipe length from the Condair SAM-e condensate outlet to the pressure steam condensate return pump inlet.

Fig. 9: Pressurized Plumbing Drain Options

3.6 Condair Mini SAM-e with Pressurized Steam

3.6.1 Condair Mini SAM-e Pressurized with External Separator

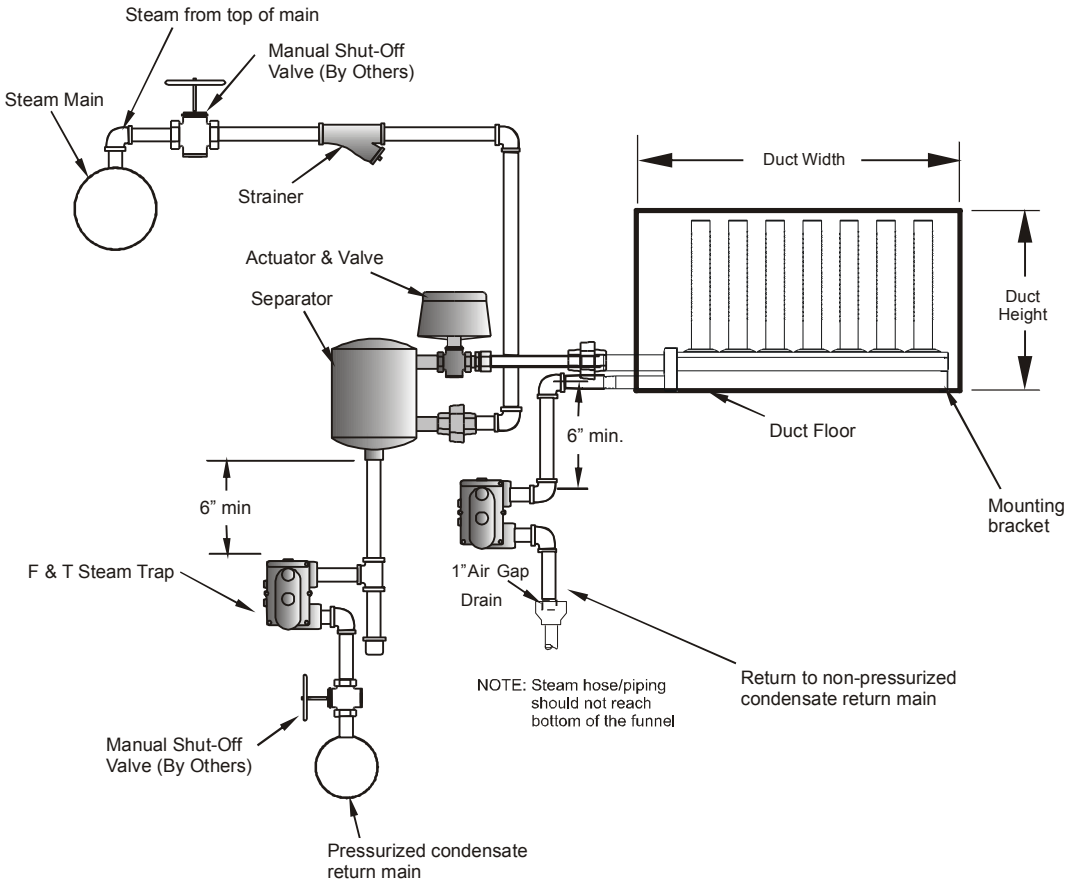

Fig. 10: Condair Mini SAM-e Pressurized with External Separator

- Steam components in grey are provided by Condair.
- Tap steam from top of pressurize steam main to avoid excess condensate.
- Condensate from separator to be returned to pressurized condensate main.
- Condensate from Condair SAM-e to be returned to atmospheric floor drain.

When pressurized steam enters the Condair SAM-e, the pressure drops down to almost atmospheric pressure. Therefore, it must be drained atmospherically, and the use of a condensate pump (rated for 212 °F) must be used to raise the condensate to a higher elevation.

3.6.2 Condair Mini SAM-e Pressurized without External Separator

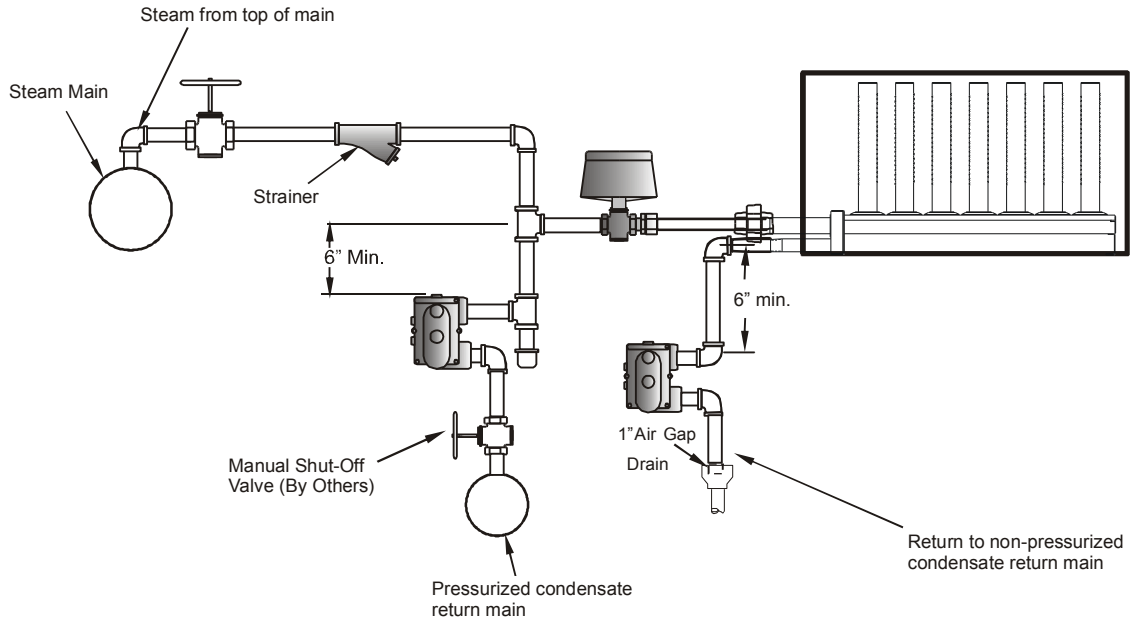

Fig. 11: Condair Mini SAM-e Pressurized without External Separator

- Max steam pressure of 15 psig when no separator is used.
- Steam components in grey are provided by Condair.
- Tap steam from top of pressurize steam main to avoid excess condensate.
- Condensate from separator to be returned to pressurized condensate main.
- Condensate from Condair SAM-e to be returned to atmospheric floor drain.

When pressurized steam enters the Condair SAM-e, the pressure drops down to almost atmospheric pressure. Therefore, it must be drained atmospherically, and the use of a condensate pump (rated for 212 °F) must be used to raise the condensate to a higher elevation.

4 Maintenance

4.1 Elements Of LiveSteam Humidifier

Tube Adapter - consists of 3 pieces (see *Fig. 12*). To maintain proper seal hand tighten tube adapter nut, plus ¼ turn. Additional o-ring is shipped with this manual. If o-ring has to be replaced do so as follows:

1. Disconnect actuator.
2. Dismount union by the separator.
3. Replace o-ring in the tube adapter.
4. Lubricate o-ring with silicone based lubricant.

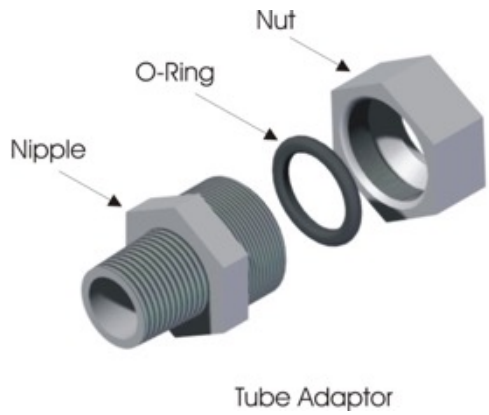

Fig. 12: Adapter Assembly

Strainer - Should be cleaned shortly after the system has begun operating (3 to 7 days) and then annually.

Separator - No maintenance required.

Distributor - No maintenance required.

Valve - Should be inspected annually to confirm that steam is not leaking from the stem packing, and the valve closes tightly. Repack if necessary.

Valve Seat - Lap seat if necessary.

Pneumatic Actuator - Should be inspected annually to confirm that the diaphragm is not leaking air, and the valve operates properly.

Electric Actuator - Should be inspected annually to confirm that the valve operates properly.

Steam Trap - Should be inspected annually. Clean and inspect seats and replace required gaskets if necessary.

Temperature Switch - Should be inspected once a year to ensure proper operation. Test by supplying steam, which should open at 200 °F.

4.2 Maintenance Schedule

Date	Personnel	Description

5 Troubleshooting

5.1 Troubleshooting Guide

Malfunction	Cause / Solution
Distributor Discharges Water	Condensate return line not draining: 1. Back pressure on condensate line. 2. Dirty steam trap - repair or replace. 3. Steam trap is wrong type. Steam supply: 1. Steam pressure is too low (under 2 psi). 2. Steam main flooding due to boiler discharging water with steam. 3. Steam supply not taken at top of main. 4. Distributor not level.
Humidifier Leaks Water from Tube Adapter	1. Tighten tube adaptor. 2. Defective o-ring in tube adapter - replace o-ring. 3. Is the o-ring lubricated?
Over Humidifying	1. Valve stem adjusted too tight and sticking. 2. Valve spring broken. 3. Foreign matter is preventing the valve from closing. 4. Valve is installed incorrectly. 5. Steam pressure exceeds rating of valve spring. 6. Controller out of calibration.
Under Humidifying	1. Boiler pressure is inadequate. 2. Steam piping is either undersized or piped incorrectly. 3. Strainer is plugged. 4. Valve is not fully opened. (Check for leaking air in actuator.) 5. Humidifier is undersized. 6. Controller is out of calibration. 7. Excess amounts of outside air. 8. Open doors, window, loading / shipping docks.
Humidity Swings	1. Controller is malfunctioning. 2. Poor location of humidity sensor. 3. Humidifier is oversized. 4. Boiler pressure swings too widely 5. Pressure reducing valve is not working properly (if installed).
Spitting During Start-Up	1. Add temperature switch. 2. Are drip legs installed? 3. Was the piping supplied undersized? 4. Is the boiler carrying too much condensate? 5. Is the boiler undersized or does it have the incorrect pressure?
Condensate In Duct	1. Mounting too close to devices (elbows, dampers, etc.) in duct. 2. Duct surface temperature is too low. 3. Oversized humidifier. 4. Malfunctioning or lack of safety high limit humidistat.

5.2 Valve Cross Reference Table

Valve Body Part Number	Condair PN	Size	Cv
G215S-C	2612426	0.5"	0.4
G215S-F	2612427	0.5"	1.3
G215S-G	2612429	0.5"	2.2
G215S-J	2612431	0.5"	4.4
G220S-K	2612435	0.75"	7.5
G232S-M	2612437	1.25"	20
G220S-J	2612434	0.75"	5.5
G225S-K	2612436	1.0"	10
G225S-L	2612810	1.0"	14
G240S-N	2612440	1.5"	28
G250S-N	2612441	2.0"	40
VBS-9263-0-6-31	1594201	0.5"	0.1
VBS-9263-0-6-33	1594203	0.5"	0.22
VBS-9263-0-6-01	1594205	0.5"	0.4
VBS-9263-0-6-35	1594206	0.5"	0.75
VBS-9263-0-6-36	1594207	0.5"	0.95
VBS-9263-0-6-02	1594208	0.5"	1.3
VBS-9263-6-0-37	1594209	0.5"	1.75
VBS-9263-0-6-03	1594210	0.5"	2.2
VBS-9263-0-6-38	1594211	0.5"	2.8
VBS-9263-0-6-04	1594213	0.5"	3.6
VBS-9263-0-6-45	1594221	0.75"	4.3
VBS-9263-0-6-05	1594222	0.75"	5
VBS-9263-0-6-06	1594223	0.75"	6.2
VA7006EC	1594432	1.0"	10
VA7008EC	1594440	1.5"	24
VA7009EC	1594450	2.0"	40

5.3 Actuator Close-Off Pressure

2612837 for (1/2" to 2") Belimo Bronze Valve							
Valve	1/2"	3/4"	1"	1-1/4"	1-1/2"	1-3/4"	2"
Belimo Bronze	50 psig (345 kPa)	50 psig (345 kPa)	50 psig (345 kPa)	50 psig (345 kPa)	34 psig (234 kPa)	N/A	19 psig (131 kPa)

2612839 for (1/2" & 3/4") Schneider SST Valve							
Valve	1/2"	3/4"	1"	1-1/4"	1-1/2"	1-3/4"	2"
Schneider SST	50 psig (345 kPa)	50 psig (345 kPa)	N/A	N/A	N/A	N/A	N/A

2612840 for (1" to 2") Warren Control SST Valve							
Valve	1/2"	3/4"	1"	1-1/4"	1-1/2"	1-3/4"	2"
Warren SST	N/A	N/A	50 psig (345 kPa)	N/A	50 psig (345 kPa)	N/A	50 psig (345 kPa)

Notes

Notes

Notes

Warranty

Condair Inc. or Condair Ltd. (depending on the entity that supplied the product, and hereinafter collectively referred to as CONDAIR) warrant for a period of two years after installation or 30 months from the manufacturer's ship date, whichever date is earlier, that CONDAIR's manufactured and assembled products, not otherwise expressly warranted, are free from defects in materials and workmanship. Notwithstanding the foregoing, the products listed below have an alternate warranty period:

- GS/GSTC Series heat exchanger(s) are warranted to be free from defects in materials and workmanship for a period of 3 years from installation or 40 months from the manufacturer's ship date, whichever is earlier.
- SAM-e Short Absorption Manifolds, except for the coupling seals, are warranted to be free from defects in materials and workmanship for a total period of 10 years from the manufacturer's ship date.
- Condair RH Connect and Condair RH Classic humidifiers are warranted to be free from defects in materials and workmanship for a period of 5 years from the manufacturer's ship date.
- Spare Parts used for repairs are warranted for the balance of the term of the warranty on the original humidifier or 90 days, whichever is longer.
- No warranty is made against corrosion, deterioration, or suitability of substituted materials used as a result of compliance with government regulations.

CONDAIR's obligations and liabilities under this warranty are limited to furnishing replacement parts to the customer, F.O.B. CONDAIR's factory. The replacement parts are warranted for the balance of the term of the warranty on the original humidifier or 90 days, whichever is longer. Procedure:

1. Customer Requests Warranty as per instructions on the CONDAIR Warranty Form.
2. CONDAIR reviews the warranty claim and will respond in one of two ways:
   a. Warranty Accepted – Replacement Part or credit granted.
   b. Warranty Declined – Response with justification will be provided to the customer.
3. In some cases, CONDAIR may request the part to be returned, freight prepaid by the customer, as part of the warranty acceptance or warranty determination process. Some reasons include:
   a. Part must be analyzed to determine the root cause of failure.
   b. Part must be returned to the supplier for claim/investigation.

   When parts are requested to be returned, replacement parts will be sent by CONDAIR to the customer against an invoice from CONDAIR paid by the customer. The cost of the replacement parts will be reimbursed to the customer with a credit note after the parts are received and analyzed by CONDAIR, if the warranty is accepted.

The warranties set forth herein are in lieu of all other warranties expressed or implied by law. No liability whatsoever shall be attached to CONDAIR until said products have been paid for in full and then said liability shall be limited to the original purchase price for the product. Any further warranty, with the exception of a purchased extended warranty described below, must be in writing, and signed by an officer of CONDAIR.

CONDAIR makes no warranty and assumes no liability unless the equipment is installed in strict accordance with the installation manual in effect at the date of purchase, and by properly qualified and licensed professionals capable of installing such equipment.

CONDAIR makes no warranty and assumes no liability whatsoever for consequential damage or damage resulting directly from misapplication, incorrect sizing, or lack of proper maintenance of the equipment.

CONDAIR makes no warranty and assumes no liability whatsoever for damage to the products, humidifier, supply lines, drain lines, steam distribution systems, or the building as a whole caused by freezing.

CONDAIR reserves the right to change the design, specifications, and performance criteria of its products without notice or obligation.

Extended Warranty

Extended warranties are available to purchase under the conditions listed above. Extended warranties must be purchased at the time of the original equipment order.

www.condairparts.com

Buy authentic Condair
parts factory direct.

Would you recommend Condair?
Take our two question survey.

U.S.A.
1021 6th Street
Racine, WI 53403

CANADA
2740 Fenton Road
Ottawa, Ontario K1T 3T7

TEL: 1.866.667.8321
EMAIL: na.info@condair.com
WEBSITE: www.condair.com