IOM

PROJECT: **VA – Renovate Logistics – B1**

LOCATION: **Fayetteville, AR**

ENGINEER: **Harrell Design Group**

MECHANICAL CONTRACTOR: **Comfort Systems**

EQUIPMENT: **VAV's**
Tagged: Typical of 7

DATE: **June 12, 2026**

Josh Davis
josh@airetechcorp.com
(479) 756-8600

3241 W. Huntsville Avenue ● Springdale, AR 72762
Voice (479)756-8600 ● Fax (479)751-0576

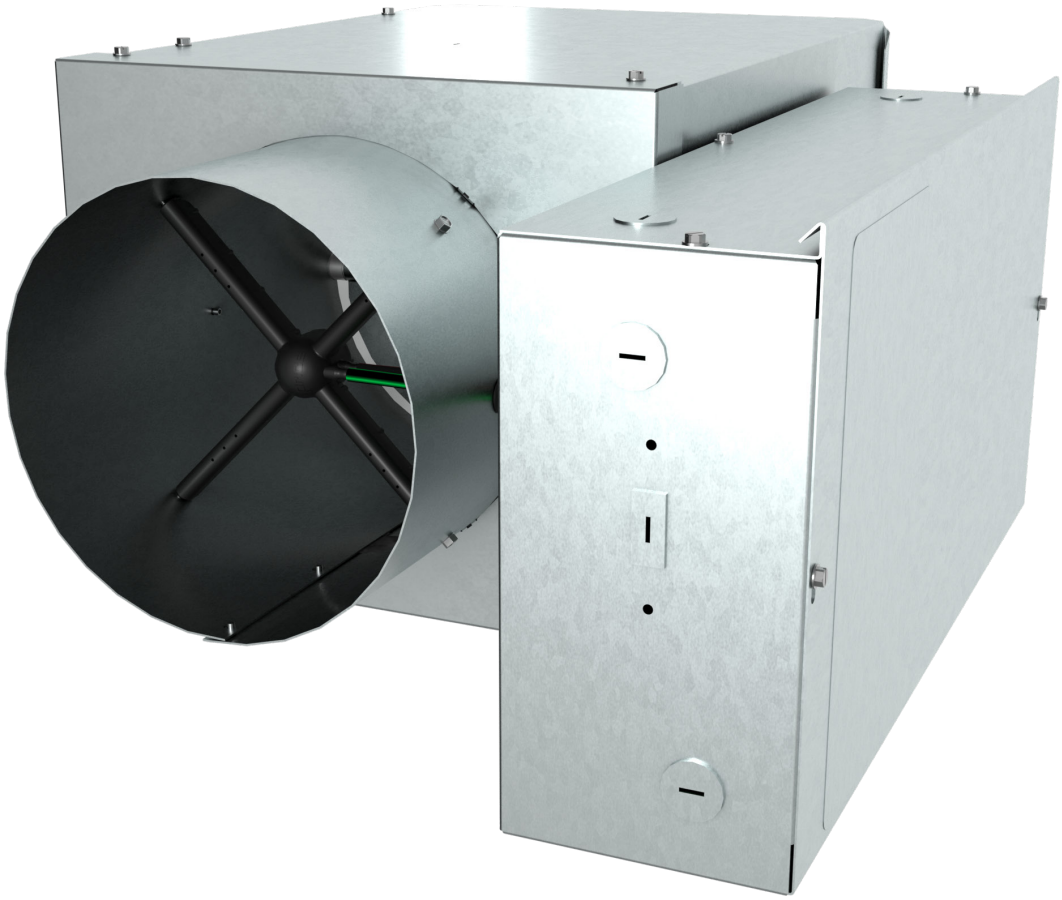

MANUAL – INSTALLATION

SDV Single Duct Terminal Units

SDV, SDVLP, SDVQ

v300 – Issue Date: 05/05/26

© 2026 Price Industries Limited. All rights reserved.

TABLE OF CONTENTS

Product Overview

General....1

Receiving Inspection....1

Wiring....1

Product Label....2

Terminal Unit Start-up Check List....3

Installation & Mounting Instructions

Installing the SDV Terminal Unit....4

SP300 Calibration Curves....5

Orifice Ring Calibration Curves....6

Pheumatics

CP101 Calibration Procedure....7

Troubleshooting Guide....9

Maintenance

SP300 Removable Sensor Maintenance Instructions....10

Replacement Parts....11

SDV SINGLE DUCT TERMINAL UNITS

PRODUCT OVERVIEW

General

The SDV assembly is designed to accept Direct Digital Controls (DDC) for VAV pressure independent operation.

The terminal unit controls are supplied by the controls contractor and either factory or field mounted and wired. For information concerning controls, components, sequence of operation, etc., please refer to the documentation provided by the controls contractor.

Receiving Inspection

After unpacking the assembly, check it for shipping damage. If any shipping damage is found, report it immediately to the delivering carrier. During unpacking and installation do not handle by the inlet velocity sensor, damper shaft, or tubing. Damage may result.

Wiring

If controls have been factory mounted, a wiring diagram will be included with the unit indicating the factory mounted components. For field wiring of room sensors and other accessories, refer to the controls contractor's documentation. If the controls have been field mounted, refer to the controls contractor's documentation for all wiring information.

Damper rotation is always clockwise to the open position. An identification mark on the end of the shaft indicates the damper position.

The factory supplied sensing lines are color coded. Red indicates the total pressure or "HI" line which should be located on the upstream side. Green indicates the static pressure or "LO" line which should be located on the downstream side.

An optional protective enclosure may be provided to house the terminal unit control components. The enclosure cover is removable with two sheet metal screws.

The velocity sensor is normally supplied as standard with the terminal unit. However, in some cases a flow sensing device supplied by the controls contractor may be factory or field mounted. Refer to the submittal drawing for illustration.

The air volume ranges listed are recommended for optimum performance. A minimum value of zero is also acceptable if no heating coils are attached.

Selection of air flow limits below the listed values is not recommended. Stability and accuracy may not be acceptable at lower than recommended air flow limits. The actual performance will vary depending on the terminal unit controls supplied.

SDV ▼

FIGURE 1: SIDE MOUNTED CONTROLS - STANDARD CONSTRUCTION

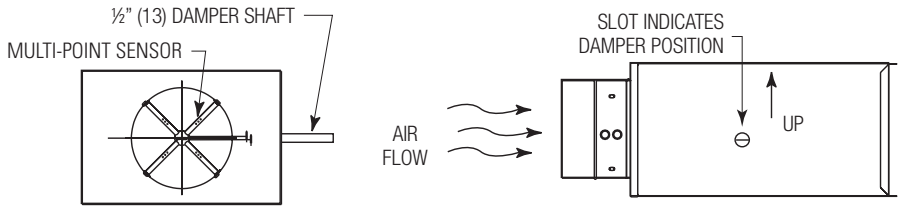

FIGURE 2: BOTTOM MOUNTED CONTROLS - CB

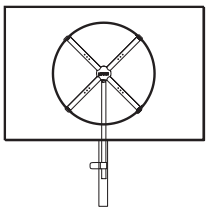

FIGURE 3: TOP MOUNTED CONTROLS - CT

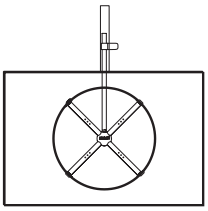

SDV SINGLE DUCT TERMINAL UNITS

PRODUCT OVERVIEW

Product Label

All Price Terminal units are tagged with the label shown above. The label identifies airflow and unit mounting orientation. It also identifies model number, quantity, unit type, controller type, liner type, controls and wiring diagram are also identified.

PRODUCT LABEL ▼

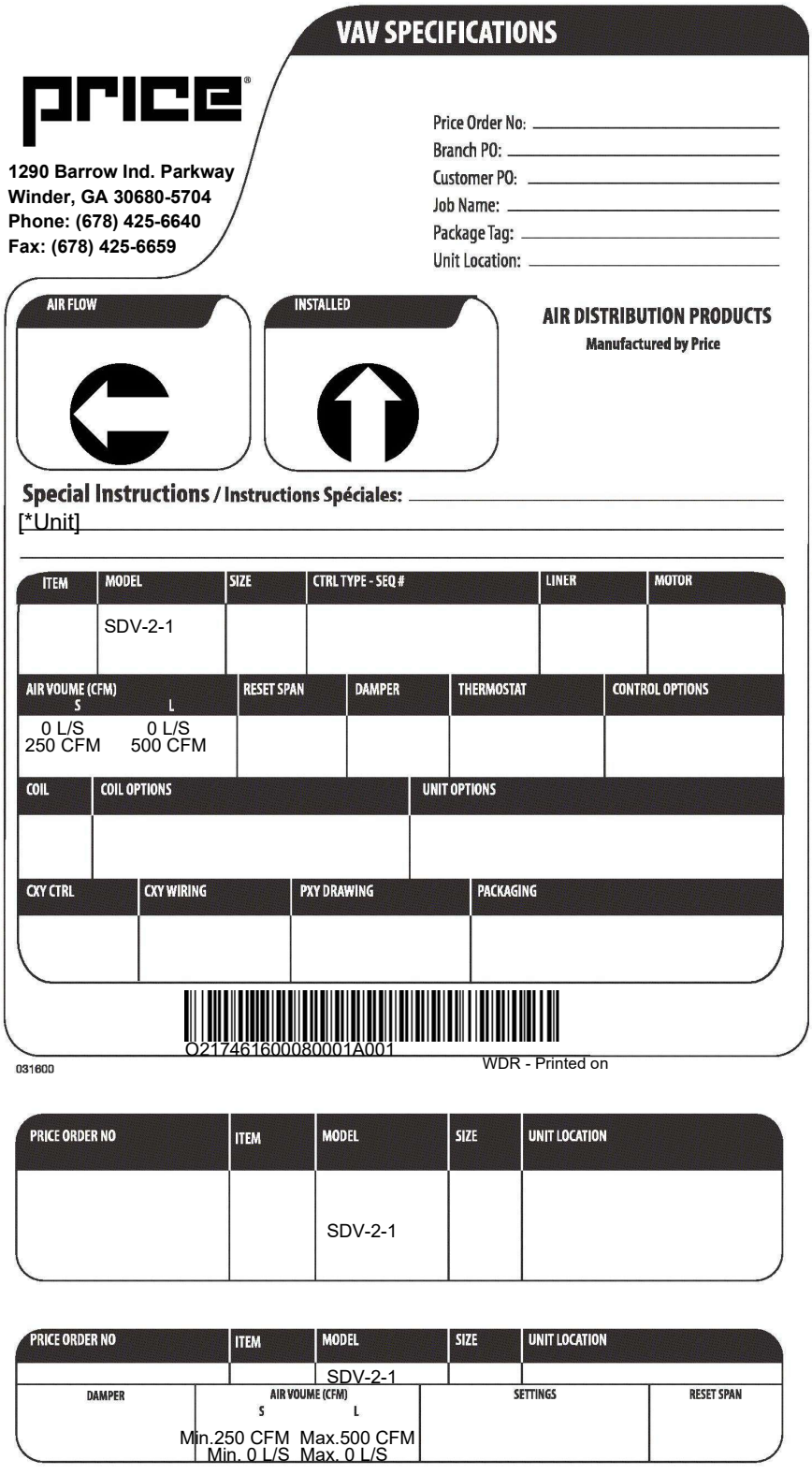

SDV SINGLE DUCT TERMINAL UNITS

PRODUCT OVERVIEW

Terminal Unit Start-up Check List

Project Name		
Model Number	Unit Size	Serial Number
Unit Tag	Serving Room	
Power Supply (V/ph/Hz)	Name Plate Amps	Measured Amps

Basic Assembly

- ☐ Product received undamaged
- ☐ Any shipping hardware and packaging has been removed
- ☐ All parts are accounted for and installed per manufacture's recommendations
- ☐ Product assembly and accessory/ controls handing are correct
- ☐ Unit mounted level and plumb and secured in location
- ☐ Electrical service is correct
- ☐ Proper access available for unit and components (access panel not obstructed)
- ☐ Correct overcurrent protection provided (if applicable)
- ☐ Correct service switch/disconnect provided (if applicable)
- ☐ Code compliance for all components
- ☐ Unit protected from dirt and foreign matter
- ☐ All ductwork and connections are free from leaks.
- ☐ Sufficient duct static pressure is available at the terminal primary air inlet (reference catalog minimum operating pressure drop values)
- ☐ All equipment downstream of the terminal units is installed and adjusted.
- ☐ Downstream duct static pressure meets the minimum requirements for safe operation (reference installation and operation manual)
- ☐ Return air opening is free of obstruction to ensure adequate airflow (if applicable)
- ☐ Return air filter is clean (if applicable)
- ☐ Thermostats are calibrated and operational (if applicable).

Water Coil (if applicable)

- ☐ Coil fins are not damaged
- ☐ Water system is free of leaks
- ☐ Fluid system is properly vented

Electric Coil (if applicable)

- ☐ Coil elements are free of dirt and foreign matter
- ☐ Sufficient clearance to access doors
- ☐ A minimum of 70 cfm/kW airflow

Notes

Completed By	Date

Installing the SDV Terminal Unit

The basic SDV is light enough that it can be supported by the ductwork in which it is installed. Where accessory modules, such as coils, attenuators or multiple outlets are included, the assembly should be supported directly. Use the support method prescribed for the rectangular duct in the job specifications.

NOTE: For optimal performance, ASHRAE Standard 130 dictates 3 diameters of straight hard duct before the inlet of terminal unit to align with catalog lab performance. However, the SP-300 sensor can maintain a flow accuracy of +/- 5% with reduced inlet conditions including 1.5 duct diameters of straight duct or a hard ducted elbow upstream of the terminal unit.

Poor inlet conditions can still cause unpredictable measurement accuracy. For example, flex duct upstream of the inlet should be avoided.

NOTE: If CB (controls bottom mounted) option is chosen, then the housing is to be installed as noted above with exception of the damper shaft being oriented to the bottom of the housing. If the CT (controls top mounted) option is chosen, then the housing is to be installed as noted above with the exception of the damper shaft being oriented to the top of the housing.

To prevent excess air leakage, all joints should be sealed with an approved duct sealer. This would apply to all accessory module connections as well as the basic assembly.

NOTE: There are no specific restrictions on clearances, but we do recommend adherence to the National Electric Code (NEC) and any local codes when determining appropriate minimum electrical clearance for service. The NEC describes the attached clearances.

SDV SINGLE DUCT TERMINAL UNITS

INSTALLATION INSTRUCTIONS

SDV/SDVQ

Unit Size	CFM Min (0.004")	CFM Min (0.02")	CFM Max (1.5")	CFM (2000 fpm)
4	30	45	400	150
5	40	60	500	250
6	55	65	550	400
7	75	95	800	550
8	95	125	1100	700
9	120	160	1400	900
10	145	210	1800	1100
12	205	300	2600	1600
14	280	430	3700	2100
16	360	575	5000	2800
24 x 16	685	1185	8400	5300

SDVLP

Unit Size	CFM Min (0.004")	CFM Min (0.02")	CFM Max (1.5")	CFM (2000 fpm)
9	145	315	1050	900
10	170	380	1350	1100
12	230	505	2100	1600
14	300	665	3000	2100
16	410	915	4000	2800

NOTES:

1. Factory calibrated controls must be selected within the above flow range limits. A minimum value of 0 is also available. When an auxiliary flow setting is specified, the value must be greater than the minimum setting and within the range limits.
2. On controls mounted by Price but supplied by others, the air volume ranges are guidelines only.
3. Minimum airflow limited for digital controls is based on min 0.02 in.w.g. differential pressure signal from airflow sensor. Maximum Airflow limit is based on max 1.5 in.w.g. differential pressure from airflow sensor.
4. Selection of airflow limits outside the listed values is not recommended. Stability and accuracy may not be acceptable at lower than recommended airflow limits. The actual performance will vary depending on the terminal unit controls supplied.
5. 2000 FPM is used a maximum velocity for terminal unit sizing to ensure there is no airborne self generated noise.
6. 0.004 in.w.g applications require careful selection of controllers and sequencing. For more information on differential minimums please contact: terminals@priceindustries.com

SP300 Calibration Curves

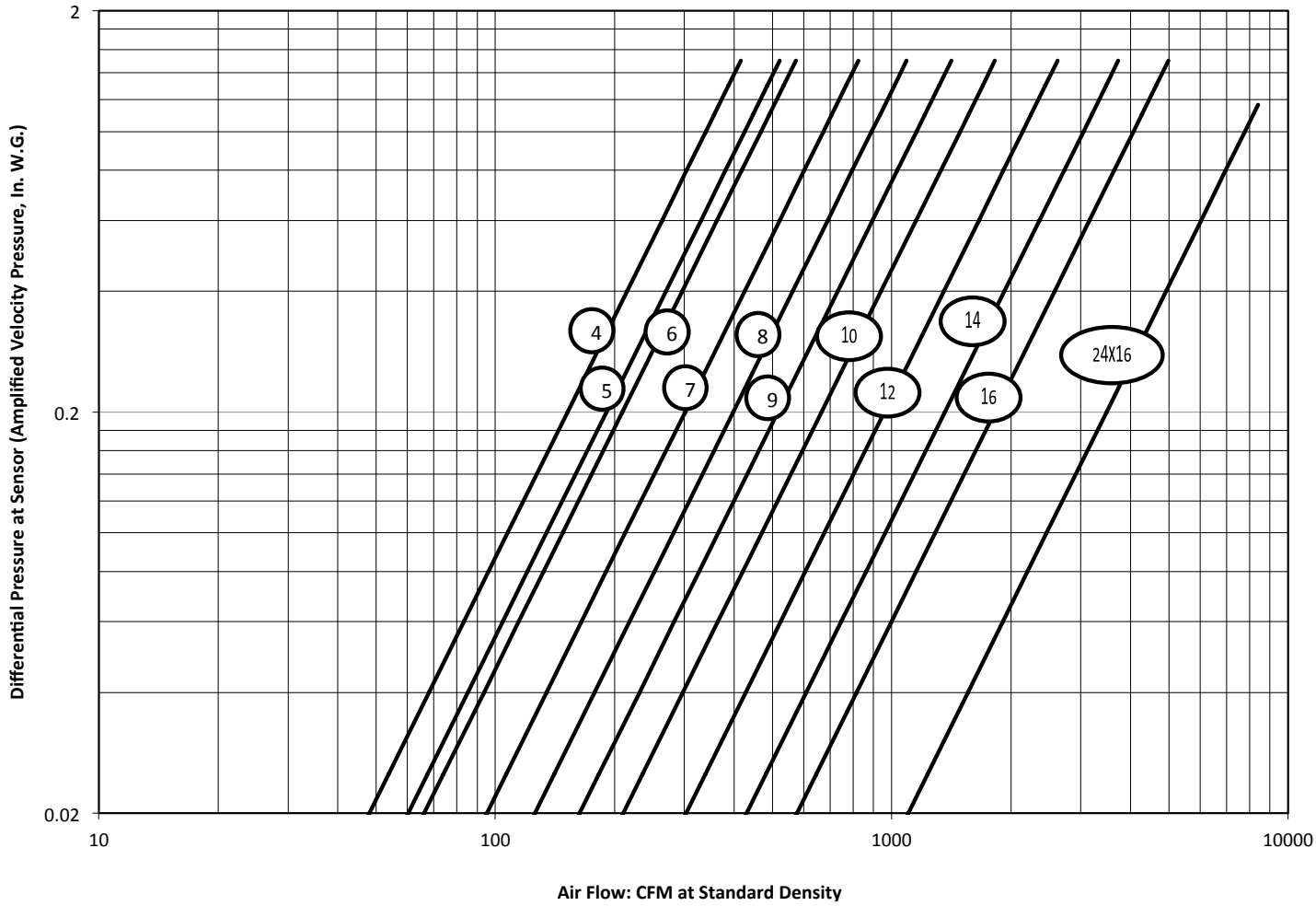

Calibration Equation

$$VP = \left(\frac{Q}{K}\right)^2$$

VP - differential pressure at sensor, inches w.g.

Q - air flow rate, cfm at standard density.

K - calibration constant

Unit Size	K
4	340
5	426
6	468
7	673
8	890
9	1155
10	1487
12	2141
14	3045
16	4074
24 x 16	7785

1. Setting flow limits for a differential pressure of less than 0.02 inches is NOT recommended. Stability and accuracy of flow limits may not be acceptable due to low velocity pressure signal. Performance will vary depending on the terminal unit controls provided.
2. For field calibration of air flow limits refer to the control contractor's documentation.
3. Red and green tubes on SP300 sensor are used to accurately measure the velocity across the duct and sent the measurement to the pressure transducer.
4. Gauge taps (tees) are sometimes used in the balancing process to verify the pressure signal and airflow measured by the terminal unit cross flow sensor.

Orifice Ring Calibration Curves

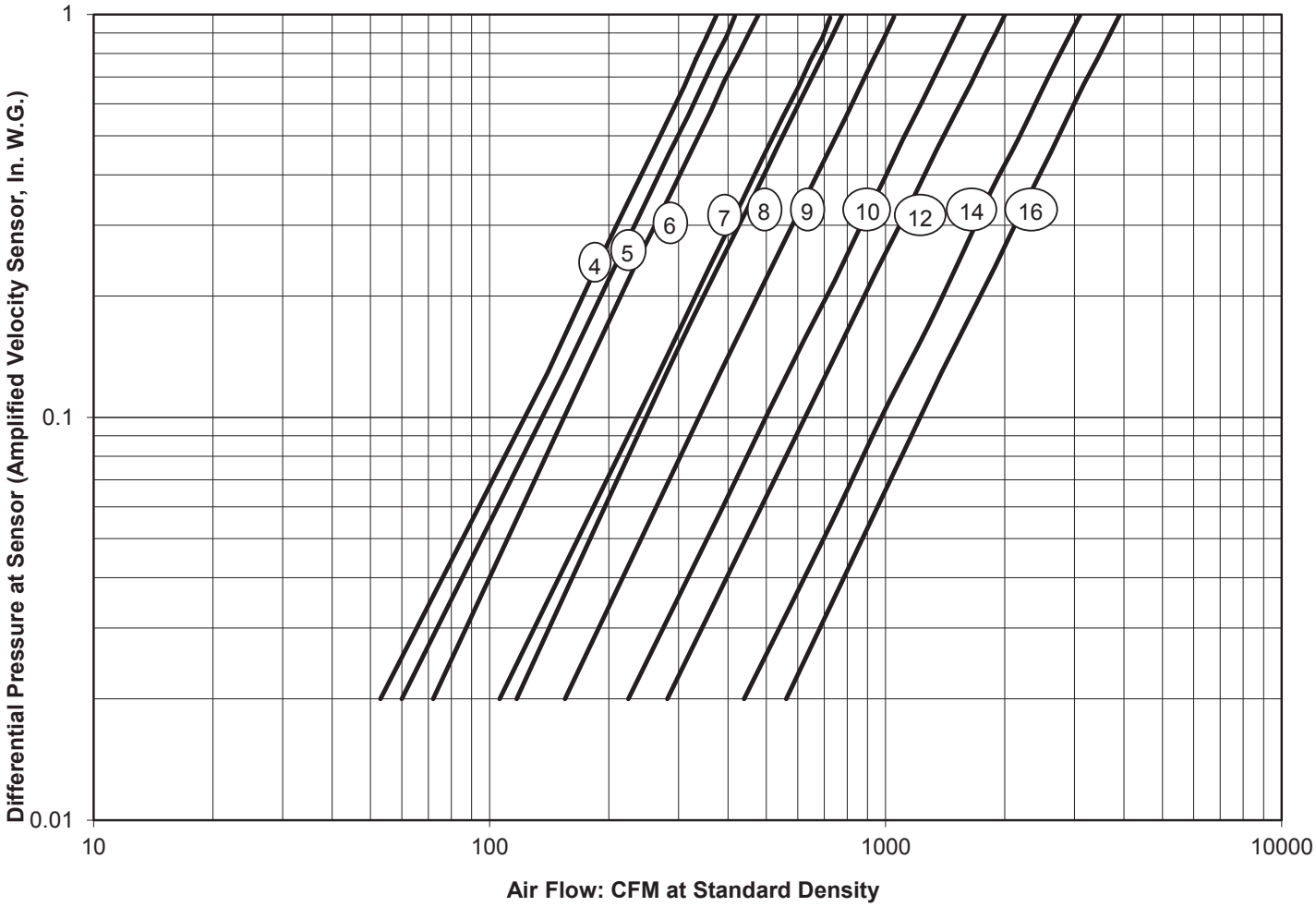

Calibration Equation

$$VP = \left(\frac{Q}{K}\right)^2$$

VP - differential pressure at sensor, inches w.g.

Q - air flow rate, cfm at standard density.

K - calibration constant

Unit Size	K	Orifice Used
4	380	3.75"
5	423	4.5"
6	480	5"
7	740	6.1”
8	783	6.6"
9	1065	7.6"
10	1584	8.75"
12	1992	10.25"
14	3105	12.25"
16	3886	14"

1. Setting flow limits for a differential pressure of less than 0.02 inches is NOT recommended. Stability and accuracy of flow limits may not be acceptable due to low velocity pressure signal. Performance will vary depending on the terminal unit controls provided.
2. For field calibration of air flow limits refer to the control contractor’s documentation.
3. Red and green tubes on SP300 sensor are used to accurately measure the velocity across the duct and sent the measurement to the pressure transducer.
4. Gauge taps (tees) are sometimes used in the balancing process to verify the pressure signal and airflow measured by the terminal unit cross flow sensor.

CP101 Calibration Procedure

A. Damper Action

1. Damper action is factory set. To reset action, loosen damper selection switch screw and align desired action with the damper position. Retighten screw.
2. Actuator must be repositioned to provide appropriate fail safe position. (See Page 4 for instructions)

B. Reset Start Point

1. Reset start point is factory calibrated to the specified setting on the control assembly label.
2. To field adjust, remove the gauge tap cap at "G" and attach a 0 - 30 psi pressure gauge.
3. Adjust the thermostat pressure at "T" port to the desired start point value with a gradual switch or pressure regulator. (Start point is lowest span pressure).
4. Adjust reset start knob until the gauge pressure begins to increase slightly (greater than zero but less than 0.3).
5. Replace gauge tap cap.

C. Reset Span

1. Reset span is factory calibrated to the specified setting on the control assembly label.
2. To field adjust, remove the gauge tap cap at "G" and attach a 0 - 30 psi pressure gauge.
3. Adjust the thermostat pressure at "T" port to above 15 psi.
4. Adjust reset span knob until the gauge pressure is equal to the desired reset span (total span pressure, not end span pressure).
5. Replace gauge tap cap.

D. Air Volume Limits

1. Remove the caps from the tees in the HI (red) and LO (green) tubes leading from the air flow sensor in the assembly inlet. Connect a differential pressure gauge to the tees. A gauge with a 0 to 1 inch w.g. scale is recommended.
2. Refer to the calibration curve for the size assembly being serviced. From the curve read the differential pressure across the sensor for the required air flow. (See Page 6)
3. Alternately, calculate the differential pressure from the equations on page 6.

Direct Acting Cooling or Reverse Acting Heating

4. Adjust the minimum air flow limit first.
5. Set the thermostat signal to 0 psi or disconnect the thermostat tube from the controller.
6. Adjust the "LO STAT" dial on the controller (centre knob) until the gauge reads the required differential pressure for minimum air volume. Turn the dial slowly, allowing time for the damper actuator to complete its travel in response to the adjustments.
7. Adjust the maximum air flow limit, after verifying the minimum air flow limit is set correctly.
8. Apply 15 psi minimum air pressure to the thermostat connection at the controller.
9. Adjust the "HI STAT" dial on the controller (outer knob) until the gauge reads the required differential pressure for maximum air volume. Turn the dial slowly, allowing time for the damper actuator to complete its travel in response to the adjustments.
10. Cycle the thermostat several times. This can be quickly accomplished by removing the cap from the gauge tap (Port G) and varying the bleed rate with finger pressure. Replace cap and check the air flow limits. If set points have changed, repeat steps 4 to 10.

Reverse Acting Cooling or Direct Acting Heating

4. Adjust the maximum air flow limit first.
5. Set the thermostat signal to 0 psi or disconnect the thermostat tube from the controller.
6. Adjust the "LO STAT" dial on the controller (centre knob) until the gauge reads the required differential pressure for maximum air volume. Turn the dial slowly, allowing time for the damper actuator to complete its travel in response to the adjustments.
7. Adjust the minimum air flow limit, after verifying the maximum air flow limit is set correctly.
8. Apply 15 psi minimum air pressure to the thermostat connection at the controller.
9. Adjust the "HI STAT" dial on the controller (outer knob) until the gauge reads the required differential pressure for minimum air volume. Turn the dial slowly, allowing time for the damper actuator to complete its travel in response to the adjustment.
10. Cycle the thermostat several times. This can be quickly accomplished by removing the cap from the gauge tap (Port G) and varying the bleed rate with finger pressure. Replace cap and check the air flow limits. If set points have changed, repeat steps 4 to 10.

General

11. Always adjust the "LO STAT" dial first.
12. After calibration is complete, reconnect the thermostat tube to the controller if is has been removed during the calibration procedure.
13. Disconnect the gauge and replace the caps on the tees.
14. Replace the protective metal cover.

Troubleshooting Guide

General	1. Locate thermostat and cycle — direct acting stat will bleed on heating. 2. Confirm box size and rating with drawing and box schedule (check label on terminal). Check position of controller to ensure it is installed level. 3. For CP101 controller, check the damper selector switch at the face of the controller. Ensure that switch is set in the correct mode. 4. Visually check piping and connections to box controls and motor. Blue — Main Air (M) White — Thermostat (T) Yellow — Actuator (B) Red — High Port (X - CP100) (Y - CP200) (H - CP101) Green — Low Port (Y - CP100) (X - CP200) (L - CP101) 5. Confirm caps are securely in place on the tees in the sensor lines between the sensor and the controller. 6. Confirm that the “G” port cap on controller is in place. 7. Confirm main air pressure (15 psi minimum - 25 psi maximum). 8. Confirm thermostat pressure. Cycle thermostat from full cooling to full heating. 9. Confirm actuator pressure from controller by cycling thermostat. 10. Confirm actuator operation by stroking actuator with a hand pump noting at what pressure the actuator begins to stroke and is fully stroked.
If Velocity Pressure is Below Specified Value and the Damper is Fully Open	1. Connect a differential pressure gauge (0 - 1.0” w.g.) to the tees in the sensor lines between the sensor and the controller. 2. Check velocity pressure reading and compare with the value indicated on the controller label. 3. If the velocity pressure is below the specified value and the damper is fully open, this would indicate insufficient inlet duct static pressure, starving.
If the Velocity Pressure Indicated by the Gauge Does Not Match the Specified Value.	1. If the damper of the control assembly is partially closed, this indicates the unit is under control. 2. If the velocity pressure indicated by the gauge does not match the specified value, recalibrate the controller according to the procedures outlined in this manual.
If Supply Air Flow Measured by Other Means is Incorrect	1. If the supply air flow measured by other means (pitot tube traverse, summation of outlets) is incorrect, inspect the inlet connection to the control assembly. 2. Price recommends a minimum of 3 duct diameters of straight inlet duct, **same size as inlet**, between the inlet and any transition, take off or fitting.
If Velocity Pressure Indicated by the Gauge is Lower then Specified but Actual Air Supply Exceeds Design Flow	Check the low pressure tubing connection on the controller to see if tubing is connected.
If the Damper Remains Fully Open, but Sufficient Static Pressure Exists at the Inlet	The HI sensor port or control line may be plugged. Clear the passage with compressed air.
If the Damper Remains Fully Closed	The LO sensor port or control line may be plugged. Clear the passage with compressed air.

SP300 Removable Sensor Maintenance Instructions

1. Detach SP300 high and low signal tubing between sensor and controls at the tee connections as shown in Figure 1.
2. Undo latches holding sensor in unit and remove sensor as shown in Figure 2.
3. Clean sensor by blowing compressed air through both HIGH and LOW signal tubing.
4. Wipe off any foreign particles with a clean rag.
5. Reinstall sensor into unit ensuring that it is in the correct orientation and fasten latches to securely hold sensor in unit.

FIGURE 1 ▼

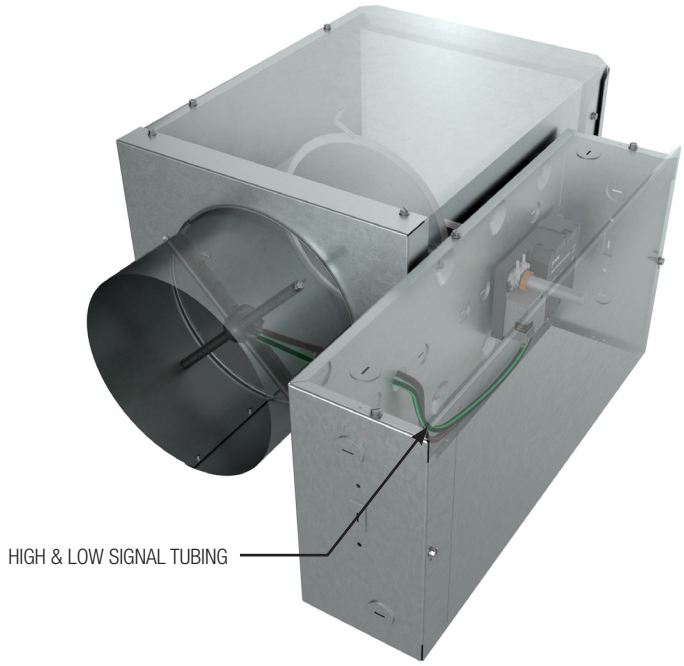

FIGURE 2 ▼

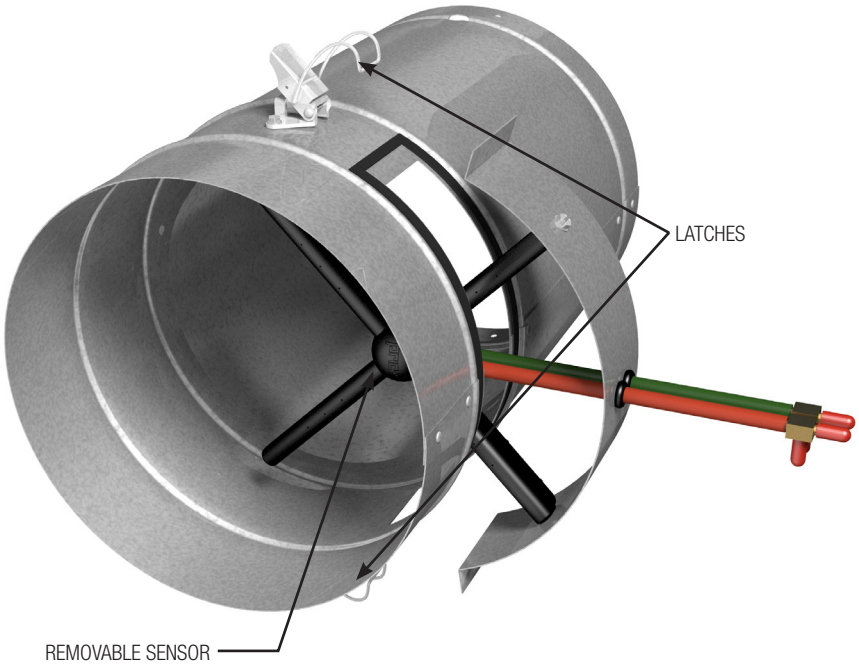

Replacement Parts

Component	Part#	Description
Removable SP300 Sensor	041688-001	Sensor SP300, Sizes 4,5 & 6
	041688-002	Sensor SP300, Size 7
	041688-003	Sensor SP300, Size 8
	041688-004	Sensor SP300, Size 9
	041688-005	Sensor SP300, Size 10
	041688-006	Sensor SP300, Size 12
	041688-007	Sensor SP300, Size 14, Size 24x16 (qty. 2 required)
	041688-008	Sensor SP300, Size 16
	247072-001	Duct Cover for Removable Sensor Sizes 4,5 & 6
	247072-002	Duct Cover for Removable Sensor Size 7
	247072-003	Duct Cover for Removable Sensor Size 8
	247072-004	Duct Cover for Removable Sensor Size 9
	247072-005	Duct Cover for Removable Sensor Size 10
	247072-006	Duct Cover for Removable Sensor Size 12
	247072-007	Duct Cover for Removable Sensor Size 14
	247072-008	Duct Cover for Removable Sensor Size 16
	203132-999	.250” Green Tubing, Low Signal
	203136-999	.250” Red Tubing, High Signal
	041510-001	Rubber Grommet RB-215
	041683-001	Tee, Brass, .250” x .250” x .250”

For further SDV Miscellaneous Parts, please visit: Price Industries SDV Miscellaneous Parts List

This document contains the most current product information as of this printing.
For the most up-to-date product information, please go to priceindustries.com

© 2026 Price Industries Limited. All rights reserved.