Beaver Water District

BEAVER WATER DISTRICT

WESTERN CORRIDOR PUMP STATION

100% SET - JANUARY 2023

BLACK & VEATCH

B&V PROJECT 405654

CERTIFICATE OF AUTHORIZATION
BLACK & VEATCH CORP.
NO. 381
ARKANSAS

THIS DOCUMENT WAS ORIGINALLY ISSUES AND SEALED ON JANUARY 24, 2023 BY ANDREW J. HANSEN, A LICENSED PROFESSIONAL ENGINEERING IN THE STATE OF ARKANSAS, E-14664

olsson

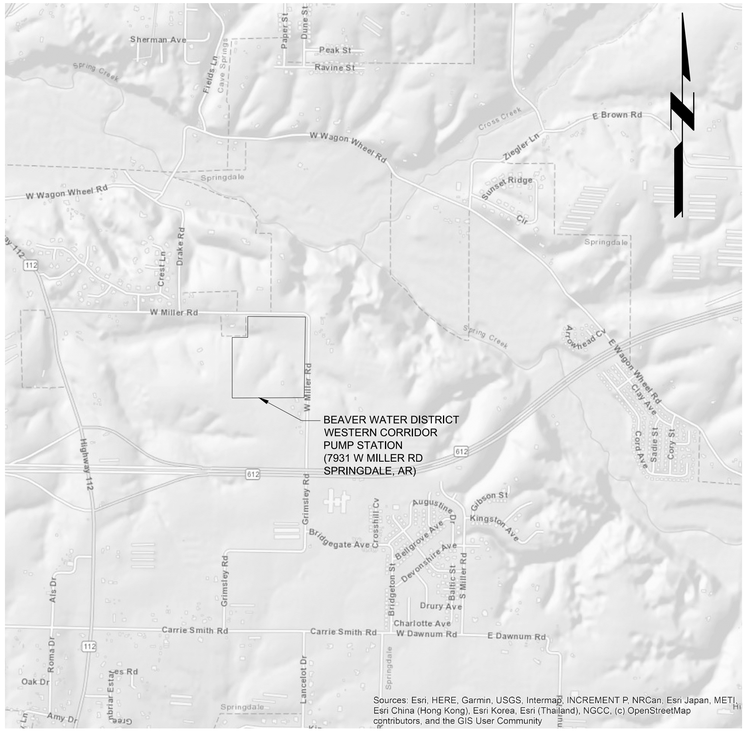

VICINITY MAP
NO SCALE

D40012

INDEX OF DRAWINGS

SHT	DWG #	DRAWING TITLE
GENERAL		
	G-00-000	COVER SHEET
1	G-00-001	INDEX OF DRAWINGS
2	G-00-002	LEGEND AND GENERAL NOTES
SITEWORK / CIVIL		
3	C-00-001	CIVIL - ABBREVIATIONS
4	C-00-002	CIVIL - GENERAL ARRANGEMENT AND CIVIL SITEWORK NOTES
5	C-00-003	CIVIL - EROSION CONTROL NOTES
6	C-00-004	CIVIL - PROCESS SCHEMATIC
7	C-00-005	CIVIL - HYDRAULIC PROFILE
8	C-01-101	CIVIL - OVERALL SITE PLAN
9	C-01-102	CIVIL - ENLARGED SITE PLAN
10	C-01-103	CIVIL - GRADING PLAN
11	C-01-104	CIVIL - ENLARGED GRADING AND PAVING PLAN
12	C-01-105	CIVIL - ENLARGED UTILITY PLAN (1 OF 2)
13	C-01-106	CIVIL - ENLARGED UTILITY PLAN (2 OF 2)
14	C-01-107	CIVIL - DETENTION BASIN ENLARGED PLAN
15	C-01-108	CIVIL - EROSION CONTROL PLAN SOUTH - PHASE 1
16	C-01-109	CIVIL - EROSION CONTROL PLAN NORTH - PHASE 1
17	C-01-110	CIVIL - EROSION CONTROL PLAN SOUTH - PHASE 2
18	C-01-111	CIVIL - EROSION CONTROL PLAN NORTH - PHASE 2
19	C-01-112	CIVIL - EXISTING DRAINAGE AREA
20	C-01-113	CIVIL - POST CONSTRUCTION DRAINAGE AREAS
21	C-01-114	CIVIL - POST CONSTRUCTION INLET DRAINAGE AREAS
22	C-01-301	CIVIL - PIPE PROFILES (1 OF 3)
23	C-01-302	CIVIL - PIPE PROFILES (2 OF 3)
24	C-01-303	CIVIL - PIPE PROFILES (3 OF 3)
25	C-01-501	CIVIL - SITEWORK DETAILS (1 OF 2)
26	C-01-502	CIVIL - SITEWORK DETAILS (2 OF 2)
27	C-01-503	CIVIL - STORM SEWER DETAILS
28	C-01-504	CIVIL - EROSION CONTROL DETAILS
29	C-01-601	CIVIL - COORDINATE TABLES
30	C-99-501	CIVIL - MISCELLANEOUS DETAILS
ARCHITECTURAL		
31	A-42-101	PUMP STATION - PERSPECTIVES
32	A-42-102	PUMP STATION - LIFE SAFETY PLAN & CODE ANALYSIS
33	A-42-103	PUMP STATION - OVERALL FLOOR PLAN
34	A-42-104	PUMP STATION - PARTIAL PLAN & REFLECTED CEILING PLAN
35	A-42-105	PUMP STATION - ENLARGED PLAN & DETAILS
36	A-42-201	PUMP STATION - BUILDING ELEVATIONS
37	A-42-301	PUMP STATION - SECTIONS
38	A-42-302	PUMP STATION - SECTIONS
39	A-42-501	PUMP STATION - DETAILS
40	A-42-601	PUMP STATION - SCHEDULES
41	A-42-602	PUMP STATION - DOOR & WINDOW DETAILS
42	A-42-603	PUMP STATION - DOOR DETAILS
43	A-42-604	PUMP STATION - WINDOW DETAILS
44	A-42-605	PUMP STATION - WINDOW & LOUVER DETAILS
45	A-43-101	ELECTRICAL BUILDING - PERSPECTIVES
46	A-43-102	ELECTRICAL BUILDING - LIFE SAFETY PLAN, CODE ANALYSIS & FLOOR PLAN
47	A-43-201	ELECTRICAL BUILDING - BUILDING ELEVATIONS
48	A-43-301	ELECTRICAL BUILDING - SECTIONS AND SCHEDULES
STRUCTURAL		
49	S-00-001	STRUCTURAL - GENERAL NOTES
50	S-00-002	STRUCTURAL - LOADING CRITERIA
51	S-00-003	STRUCTURAL - LEGENDS AND ABBREVIATIONS
52	S-42-101	PUMP STATION - TRENCH FOUNDATION PLAN
53	S-42-102	PUMP STATION - OPERATING FLOOR PLAN
54	S-42-103	PUMP STATION - CRANE RUNWAY BEAM PLAN
55	S-42-104	PUMP STATION - ROOF PLAN
56	S-42-301	PUMP STATION - SECTIONS
57	S-42-302	PUMP STATION - SECTIONS
58	S-42-501	PUMP STATION - PIPE SUPPORT & MISCELLANEOUS DETAILS
59	S-42-502	PUMP STATION - MISCELLANEOUS DETAILS
60	S-43-101	ELECTRICAL BUILDING - FLOOR PLAN
61	S-43-102	ELECTRICAL BUILDING - ROOF PLAN
62	S-43-301	ELECTRICAL BUILDING - SECTIONS
63	S-43-501	ELECTRICAL BUILDING - MISCELLANEOUS DETAILS
64	S-99-501	STANDARD CONCRETE REINFORCEMENT DETAILS
65	S-99-502	STANDARD CONCRETE JOINT DETAILS
66	S-99-503	STANDARD CONCRETE MASONRY REINFORCEMENT DETAILS
67	S-99-504	STANDARD CONCRETE MASONRY LINTEL AND JAMB REINFORCEMENT DETAILS
68	S-99-505	STANDARD 3 RAIL GUARDRAIL DETAILS
69	S-99-506	MISCELLANEOUS DETAILS
70	S-99-507	STEEL DECKING SCHEDULE AND DETAILS
PROCESS MECHANICAL		
71	M-00-001	PROCESS MECHANICAL LEGENDS AND GENERAL NOTES
72	M-42-101	PUMP STATION - OVERALL PLAN
73	M-42-102	PUMP STATION - OPERATING FLOOR PLAN - ENLARGED PUMP ROOM
74	M-42-103	PUMP STATION - OPERATING FLOOR PLAN - ENLARGED PUMP ROOM
75	M-42-301	PUMP STATION - SECTIONS
76	M-42-302	PUMP STATION - SECTIONS
77	M-42-303	PUMP STATION - SECTIONS
78	M-42-501	PUMP STATION - DETAILS
79	M-43-101	ENGINE-GENERATOR ENCLOSURES - OVERALL PLAN
80	M-43-301	ENGINE-GENERATOR ENCLOSURES - SECTIONS
81	M-99-501	MISCELLANEOUS DETAILS
HVAC		
82	H-00-001	HVAC - LEGENDS, ABBREVIATIONS & GENERAL NOTES
83	H-00-501	HVAC - DETAILS & SEQUENCE OF OPERATION
84	H-00-601	HVAC - SCHEDULES
85	H-42-101	PUMP STATION - OVERALL PLAN
86	H-42-102	PUMP STATION - OPERATING FLOOR PLAN - PUMP ROOM
87	H-42-103	PUMP STATION - OPERATING FLOOR PLAN - ADMINISTRATIVE WING
88	H-42-104	PUMP STATION - OPERATING FLOOR PLAN - ELECTRICAL WING
89	H-43-101	ELECTRICAL BUILDING - FLOOR PLAN
PLUMBING		
90	P-00-001	PLUMBING - LEGENDS, ABBREVIATIONS & GENERAL NOTES
91	P-42-101	PUMP STATION - OVERALL PLAN
92	P-42-102	PUMP STATION - OPERATING FLOOR PLAN - PUMP ROOM
93	P-42-103	PUMP STATION - OPERATING FLOOR PLAN AND DETAILS - ADMINISTRATIVE WING
94	P-42-104	PUMP STATION - OPERATING FLOOR PLAN - ELECTRICAL WING
95	P-42-601	PLUMBING - SCHEDULES
96	P-42-901	PUMP STATION - WATER SUPPLY ISOMETRIC AND ENLARGED ISOMETRICS
97	P-42-902	PUMP STATION - DRAINAGE SYSTEM ISOMETRIC AND ENLARGED ISOMETRICS
98	P-99-501	PUMP STATION - DETAILS
ELECTRICAL		
99	E-00-001	ELECTRICAL - LEGENDS
100	E-00-002	ELECTRICAL - ABBREVIATIONS & NOTES
101	E-00-501	ELECTRICAL DETAILS (1 OF 4)
102	E-00-502	ELECTRICAL DETAILS (2 OF 4)
103	E-00-503	ELECTRICAL DETAILS (3 OF 4)
104	E-00-504	ELECTRICAL DETAILS (4 OF 4)
105	E-00-601	POWER DISTRIBUTION FUNCTIONAL DIAGRAM
106	E-00-602	4.16KV 43-SWGR-1 ONE-LINE DIAGRAM
107	E-00-603	4.16KV 42-SWGR-2 ONE-LINE DIAGRAM
108	E-00-604	4.16KV 42-SWGR-3 ONE-LINE DIAGRAM
109	E-00-605	42-MCC-1 ONE-LINE DIAGRAM (1 OF 2)
110	E-00-606	42-MCC-1 ONE-LINE DIAGRAM (2 OF 2)
111	E-00-607	MISCELLANEOUS ONE-LINE DIAGRAMS (1 OF 2)
112	E-00-608	MISCELLANEOUS ONE-LINE DIAGRAMS (2 OF 2)
113	E-00-609	CONTROL ONE-LINE DIAGRAMS (1 OF 4)
114	E-00-610	CONTROL ONE-LINE DIAGRAMS (2 OF 4)
115	E-00-611	CONTROL ONE-LINE DIAGRAMS (3 OF 4)
116	E-00-612	CONTROL ONE-LINE DIAGRAMS (4 OF 4)
117	E-00-613	DUCTBANK SECTIONS
118	E-00-614	LIGHTING SCHEDULE
119	E-00-615	PANEL SCHEDULES
120	E-00-616	SCHEMATICS
121	E-01-101	ELECTRICAL - OVERALL SITE PLAN
122	E-01-102	ELECTRICAL - ENLARGED SITE PLAN
123	E-42-101	PUMP STATION - OVERALL POWER PLAN
124	E-42-102	PUMP STATION - ENLARGED POWER AND GROUNDING PLAN (1 OF 4)
125	E-42-103	PUMP STATION - ENLARGED POWER AND GROUNDING PLAN (2 OF 4)
126	E-42-104	PUMP STATION - ENLARGED POWER AND GROUNDING PLAN (3 OF 4)
127	E-42-105	PUMP STATION - ENLARGED POWER AND GROUNDING PLAN (4 OF 4)
128	E-42-106	PUMP STATION - LIGHTING PLAN (1 OF 4)
129	E-42-107	PUMP STATION - LIGHTING PLAN (2 OF 4)
130	E-42-108	PUMP STATION - LIGHTING PLAN (3 OF 4)
131	E-42-109	PUMP STATION - LIGHTING PLAN (4 OF 4)
132	E-42-110	PUMP STATION - CONDUIT ROUTING PLAN (1 OF 4)
133	E-42-111	PUMP STATION - CONDUIT ROUTING PLAN (2 OF 4)
134	E-42-112	PUMP STATION - CONDUIT ROUTING PLAN (3 OF 4)
135	E-42-113	PUMP STATION - CONDUIT ROUTING PLAN (4 OF 4)
136	E-43-101	ELECTRICAL BUILDING - POWER AND GROUNDING PLAN
137	E-43-102	ELECTRICAL BUILDING - LIGHTING & RECEPTACLE PLAN
138	E-43-103	ELECTRICAL BUILDING - CONDUIT ROUTING PLAN
INSTRUMENTATION		
139	I-00-001	P&ID - LEGEND & ABBREVIATIONS - SHEET 1 OF 3
140	I-00-002	P&ID - LEGEND & ABBREVIATIONS - SHEET 2 OF 3
141	I-00-003	P&ID - LEGEND & ABBREVIATIONS - SHEET 3 OF 3
142	I-00-501	INSTRUMENT INSTALLATION DETAILS - SHEEET 1 OF 2
143	I-00-502	INSTRUMENT INSTALLATION DETAILS - SHEEET 2 OF 2
144	I-00-601	DCS NETWORK CONTROL BLOCK DIAGRAM - SHEET 1 OF 4
145	I-00-602	CCTV NETWORK CONTROL BLOCK DIAGRAM - SHEET 2 OF 4
146	I-00-603	CARD READER NETWORK CONTROL BLOCK DIAGRAM - SHEET 3 OF 4
147	I-00-604	LAN AND DCS NETWORK CONTROL BLOCK DIAGRAM - SHEET 4 OF 4
148	I-00-605	INSTRUMENT INTERCONNECTION DIAGRAM - SHEET 1 OF 4
149	I-00-606	INSTRUMENT INTERCONNECTION DIAGRAM - SHEET 2 OF 4
150	I-00-607	INSTRUMENT INTERCONNECTION DIAGRAM - SHEET 3 OF 4
151	I-00-608	INSTRUMENT INTERCONNECTION DIAGRAM - SHEET 4 OF 4
152	I-42-601	P&ID - SPRINGDALE PUMPS
153	I-42-602	P&ID - ROGERS PUMPS (FUTURE)
154	I-42-603	P&ID - FAYETTEVILLE PUMPS
155	I-42-604	P&ID - BENTONVILLE PUMPS (FUTURE)
156	I-42-605	P&ID - SPRINGDALE AND ROGERS (FUTURE) COMPRESSED AIR
157	I-42-606	P&ID - FAYETTEVILLE AND BENTONVILLE COMPRESSED AIR (FUTURE)
158	I-43-601	P&ID - GENERATOR NO. 1
159	I-43-602	P&ID - GENERATOR NO. 2

WEST MILLER ROAD IMPROVEMENTS

1	TITLE SHEET
2	GENERAL NOTES
3	ALIGNMENT DATA
4	TYPICAL SECTIONS
5	TYPICAL SECTIONS
6	PLAN AND PROFILE
7	PLAN AND PROFILE
8	PLAN AND PROFILE
9	PLAN AND PROFILE
10	PLAN AND PROFILE
11	STORM DRAINAGE PLAN AND PROFILE
12	STORM DRAINAGE PLAN AND PROFILE
13	STORM DRAINAGE PLAN AND PROFILE
14	STORM DRAINAGE PLAN AND PROFILE
15	PAVEMENT MARKING AND SIGNING PLAN
16	PAVEMENT MARKING AND SIGNING PLAN
17	STORMWATER POLLUTION PREVENTION PLAN
18	STORMWATER POLLUTION PREVENTION PLAN
19	STORMWATER POLLUTION PREVENTION PLAN
20	CITY OF SPRINGDALE STANDARD DETAILS
21	CITY OF SPRINGDALE STANDARD DETAILS
22	CITY OF SPRINGDALE STANDARD DETAILS
23	CITY OF SPRINGDALE STANDARD DETAILS
24	CITY OF SPRINGDALE STANDARD DETAILS
25	CROSS SECTIONS
26	CROSS SECTIONS
27	CROSS SECTIONS
28	CROSS SECTIONS
29	CROSS SECTIONS
30	CROSS SECTIONS
31	CROSS SECTIONS
32	CROSS SECTIONS
33	CROSS SECTIONS
34	CROSS SECTIONS

BLACK & VEATCH
Black & Veatch Corporation
Kansas City, Missouri

olsson

THIS DOCUMENT WAS ORIGINALLY ISSUED AND SEALED ON JANUARY 24, 2023 BY ANDREW J. HANSEN, A LICENSED PROFESSIONAL ENGINEER IN THE STATE OF ARKANSAS, E-14664

BEAVER WATER DISTRICT

WESTERN CORRIDOR PUMP STATION

100% SET

REVISIONS AND RECORD OF ISSUE

DESIGNED:	CJK
DETAILED:	NGH
CHECKED:	JCH
APPROVED:	AJH
DATE: JANUARY 24, 2023	
PROJECT NO.:	405654

GENERAL

INDEX OF DRAWINGS

G-00-001

PLOTTED: 1/20/2023 9:07:24 AM
FILE: C:\PW_WORKING\BVW_AMERICAS\D1129161\G-00-001.DWG
FD11000
DT1000

(SCALE BAR IS 4" AT FULL SCALE) 0 1/2 1 2 3 4

GENERAL NOTES:

1. THESE ABBREVIATIONS AND LEGENDS APPLY TO THE ENTIRE SET OF DRAWINGS; HOWEVER, SOME ABBREVIATIONS AND LEGENDS MAY NOT BE APPLICABLE TO THIS PROJECT. CONTRACTOR IS TO COORDINATE AND COMPLY WITH ALL APPLICABLE WORK.
2. SEE SHEETS A-00-001, A-00-002, S-00-002, H-00-001, P-00-001, E-00-001, E-00-002, I-00-001, I-00-002, I-00-003, AND FOR ADDITIONAL LEGENDS AND ABBREVIATIONS.
3. ALL NEW & EXISTING CONSTRUCTION & CONTOURING IS BASED UPON USGS NVGD29 DATUM. SEE GENERAL SITEWORK NOTES FOR BENCHMARKS.
4. ALL ELEVATIONS & LOCATIONS OF EXISTING PIPING, STRUCTURES, & UTILITIES AFFECTING NEW WORK SHALL BE FIELD VERIFIED IN ADVANCE BY THE CONTRACTOR.
5. CONTRACTOR SHALL PERFORM SURFACE RESTORATION AS SPECIFIED IN DIVISION 2.
6. REFERENCE SPECIFICATIONS FOR ADDITIONAL REQUIREMENTS REGARDING DEMOLITION, MODIFICATION, AND SALVAGE.
7. "SCREENED" (LIGHT) DELINEATION SHOWN ON ALL SHEETS DENOTES EXISTING FACILITIES. "SCREENED" INFORMATION WAS TAKEN FROM PREVIOUS CONSTRUCTION DRAWINGS & FIELD SURVEY, IS FOR REFERENCE ONLY & SHALL BE FIELD VERIFIED BEFORE THE ORDERING OF MATERIALS & BEGINNING CONSTRUCTION. "BOLD" (DARK) DELINEATION IS NEW WORK TO BE CONSTRUCTED UNDER THIS CONTRACT. DASHED DELINEATION SHOWN ON ALL SHEETS DENOTES FUTURE WORK UNLESS OTHERWISE NOTED.
8. CONTRACTOR TO NOTE SUPPLIED EQUIPMENT MAY VARY FROM WHAT IS SHOWN. CONTRACTOR TO COORDINATE LAYOUT, PIPING, ELECTRICAL, AND OTHER MODIFICATIONS AS REQUIRED FOR EQUIPMENT SUPPLIED.

FILL PATTERNS

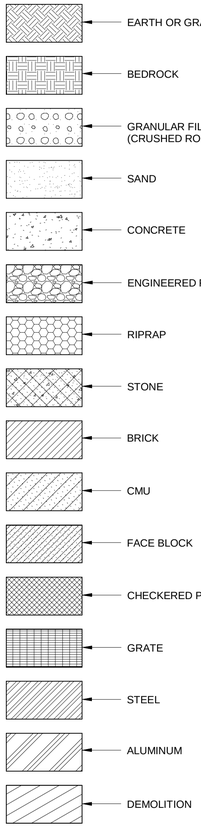

ELEVATION & GRID CALLOUTS

ELEVATION CALLOUTS

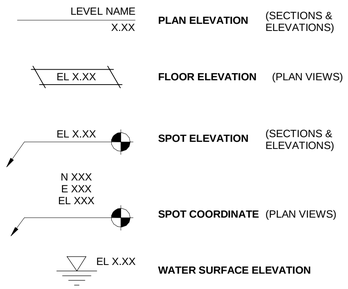

GRID/COLUMN CALLOUTS

TYPICAL GRID/COLUMN LAYOUT

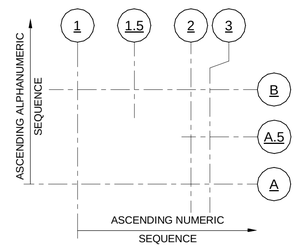

NORTH ARROW

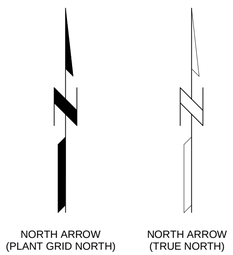

VIEW CALLOUTS

SECTION CALLOUTS

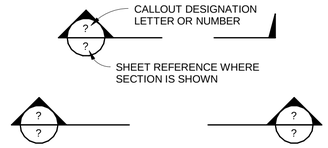

DETAIL/ENLARGED PLAN AREA CALLOUTS

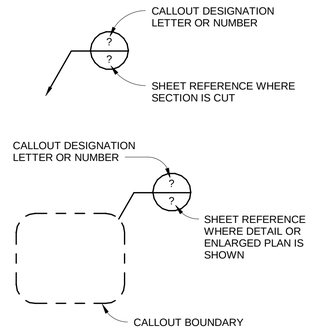

SECTION & DETAIL VIEW TITLES

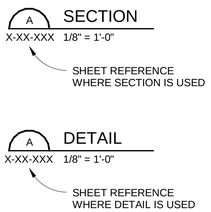

DRAWING NUMBERING SYSTEM

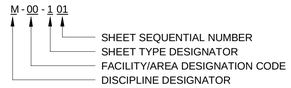

DISCIPLINE DESIGNATORS

A	ARCHITECTURAL
C	CIVIL
D	DEMOLITION
E	ELECTRICAL
F	FIRE PROTECTION
G	GENERAL
H	HVAC/BUILDING MECHANICAL
I	INSTRUMENTATION AND CONTROLS
L	LANDSCAPE
M	PROCESS MECHANICAL
P	PLUMBING
S	STRUCTURAL

AREA/FACILITY DESIGNATION CODES

REFER TO THE PROJECT SITE PLAN FOR AREA OR FACILITY DESIGNATIONS.

SHEET TYPE DESIGNATORS

0	GENERAL (SYMBOLS, LEGENDS, NOTES, ETC.)
1	PLANS (ARRANGEMENT PLANS, PARTIAL PLANS)
2	ELEVATIONS
3	SECTIONS
4	LARGE SCALE VIEWS (ENLARGED PLANS, STAIR SECTIONS OR SECTIONS THAT ARE NOT DETAILS)
5	DETAILS
6	SCHEDULES & DIAGRAMS
7	SCHEMATICS (ONE-LINES, BLOCK DIAGRAMS)
8	USER DEFINED
9	3D MODEL (PERSPECTIVES, ISOMETRICS, PHOTOGRAPHS)

LINE STYLES

EXISTING FACILITY	
NEW FACILITY	
OTHER DISCIPLINE NEW FACILITY BACKGROUND	
GRID LINE OR CENTERLINE	
MATCH LINE	
EXAMPLE BOUNDARY LINE (SEE CIVIL LEGEND)	P/L
EASEMENT LINE	E/L
SUBSTATION BOUNDARY	X
RIGHT OF WAY	R/W
OVERHEAD ELECTRICAL	OHE
BURIED ELECTRICAL	E
WATER LINE	W/S
FENCE	
FUTURE INSTALLATION	

BREAKS

PLAN, ELEVATION, AND SECTION BREAKS

PIPE BREAK

ANNOTATION

SHEET NOTES

SHEET KEYNOTE

REFERENCE KEYNOTE (KEYNOTE LIST)

REVISIONS

REVISION TAG

REVISION CLOUD

SYMBOLS

BENCHMARK

GEOTECHNICAL BORING

(SCALE BAR IS 4" AT FULL SCALE) 0 1/2 1 2 3 4

PLOTTED: 1/20/2023 7:33:03 AM
FILE: BIM 360://405654 - BWD Western Corridor Pump Station/405654-42-PUMP STATION.rvt
D1000

BLACK & VEATCH
Black & Veatch Corporation
Kansas City, Missouri

olsson

THIS DOCUMENT WAS ORIGINALLY ISSUED AND SEALED ON JANUARY 24, 2023 BY ANDREW J. HANSEN, A LICENSED PROFESSIONAL ENGINEER IN THE STATE OF ARKANSAS, E-14664

BEAVER WATER DISTRICT

WESTERN CORRIDOR PUMP STATION

100% SET

REVISIONS AND RECORD OF ISSUE

DESIGNED:	CJK
DETAILED:	BCS
CHECKED:	JCH
APPROVED:	AJH
DATE:	JANUARY 24, 2023
PROJECT NO.:	405654

PUMP STATION

GENERAL

LEGEND AND GENERAL NOTES

G-00-002

A

AB	AGGREGATE BASE
ABV	ABOVE
AC	ASPHALT CONCRETE
ACP	ASBESTOS CEMENT PIPE
AD	AREA DRAIN, ANODE
ADD	ADDITIONAL
ADJ	ADJUSTABLE, ADJACENT
ADMIN	ADMINISTRATION
ADWF	AVERAGE DRY-WEATHER FLOW
AFF	ABOVE FINISHED FLOOR
AFG	ABOVE FINISHED GRADE
AH	AHEAD
ALT	ALTERNATE, ALTERNATIVE
ANC	ANCHOR
AP	ACCESS PANEL, ANGLE POINT
APPR	APPROACH
APPROX	APPROXIMATE, APPROXIMATELY
AR	ANCHOR ROD
ARCH	ARCHITECTURAL
ASSY	ASSEMBLY
ATM	ATMOSPHERE, ATMOSPHERIC
AUTO	AUTOMATIC
AUX	AUXILIARY
AVG	AVERAGE
AWG	AMERICAN WIRE GAUGE
AWWA	AMERICAN WATER WORKS ASSOCIATION
AWWF	AVERAGE WET-WEATHER FLOW

B

B	BORE HOLE
B TO B	BACK TO BACK
BAL	BALANCE
BC	BACK OF CURB
BET	BETWEEN
BF	BLIND FLANGE
BHP	BRAKE HORSEPOWER
BITUM	BITUMINOUS
BLDG	BUILDING
BLK	BLOCK
BM	BENCHMARK
BNR	BIOLOGICAL NUTRIENT REMOVAL
BOD	BIOLOGICAL/BIOCHEMICAL OXYGEN DEMAND
BOF	BOTTOM OF FOOTING
BOP	BOTTOM OF PIPE
BOT	BOTTOM
BP	BACK PRESSURE
BRG	BEARING
BS	BOTH SIDES
BU	BELL-UP
BVC	BEGINNING OF VERTICAL CURVE

C

C	CURVE
C TO C	CENTER TO CENTER
CB	CATCH BASIN
CF	CUBIC FEET
CFM	CUBIC FEET PER MINUTE
CFS	CUBIC FEET PER SECOND
C&G	CURB AND GUTTER
CIP	CAST IRON PIPE
CISP	CAST IRON SOIL PIPE
CL	CLASS
C/L	CENTERLINE
CLG	CEILING
CLR	CLEAR, CLEARANCE
CLSM	CONTROLLED LOW STRENGTH MATERIAL
CMC	CEMENT MORTAR COATED
CML	CEMENT MORTAR LINED
CMP	CORRUGATED METAL PIPE
CO	CLEAN OUT, COMPANY
COD	CHEMICAL OXYGEN DEMAND
COL	COLUMN
COMB	COMBINATION
COMB SWR	COMBINED SEWER
CONC	CONCRETE
CONN	CONNECTION
CONST	CONSTRUCTION
CONT	CONTINUED, CONTINUOUS, CONTINUATION, CONTROL
CONTR	CONTRACTOR
COR	CORNER
CORR	CORRIDOR, CORRUGATED
CP	CONTROL POINT, CATHODIC PROTECTION, CATCH POINT
CPLG	COUPLING
CPVC	CHLORINATED POLYVINYL CHLORIDE
CSP	CORRUGATED STEEL PIPE
CTR(S)	CENTER(S)
CTS	CORROSION/CATHODIC TEST STATION
CU	CUBIC, COPPER
CY	CUBIC YARD

D

D	DOOR
DB	DUCT BANK
DBL	DOUBLE
DEG	DEGREE
DEPT	DEPARTMENT
DET	DETAIL
DI	DROP INLET, DUCTILE IRON
DIA	DIAMETER
DIFF	DIFFUSER
DIM	DIMENSION
DIP	DUCTILE IRON PIPE
DISCH	DISCHARGE
DIST	DISTRIBUTION
DIV	DIVISION
DMJ	DISMANTLING JOINT
DN	DOWN
DR	DRAIN
DW	DRY WELL
DWG(S)	DRAWING(S)

E

E	EAST, EASTING
EA	EACH
ECC	ECCENTRIC
ECC RED	ECCENTRIC REDUCER
EFF	EFFLUENT, EFFICIENCY
EG	EXISTING GRADE
EJ	EXPANSION JOINT
EL	ELEVATION
ELB	ELBOW
ELL	ELBOW
ELEC	ELECTRIC, ELECTRICAL
EMER	EMERGENCY
ENC	ENCASEMENT
ENCL	ENCLOSURE
EOL	END OF LINE
EOP	EDGE OF PAVEMENT
EOS	EDGE OF SLAB
EQ	EQUAL
EQUIP	EQUIPMENT
EVC	END OF VERTICAL CURVE
EW	EACH WAY
EXH	EXHAUST
EXIST	EXISTING
EXP	EXPANSION, EXPOSED
EXT	EXTENSION, EXTERIOR, EXTERNAL

F

F	FAHRENHEIT, FACE
F TO F	FACE TO FACE
FAB	FABRICATE(D)(TION)
FC	FACE OF CONCRETE, FAIL CLOSED
FCA	FLANGED COUPLING ADAPTER
FD	FLOOR DRAIN
FF	FINISHED FLOOR
FG	FINISHED GRADE
FH	FIRE HYDRANT
FIG	FIGURE
FL	FLOOR, FLOW LINE
FLEX	FLEXIBLE
FLG	FLANGE(D)
FM	FORCE MAIN
FMH	FLEXIBLE METAL HOSE
FO	FAIL OPEN
FOB	FLAT ON BOTTOM
FOM	FACE OF MASONRY
FOT	FLAT ON TOP
FPS	FEET PER SECOND
FRP	FIBERGLASS REINFORCED PLASTIC
FS	FAR SIDE, FLOOR SLEEVE
FT	FOOT, FEET
FTG	FOOTING
FURN	FURNISH, FURNISHED
FW	FINISHED WATER
FWD	FORWARD

G

G	GAS
GA	GAUGE
GAL	GALLON
GALV	GALVANIZED
GB	GRADE BREAK
GC	GROOVED COUPLING
GEN	GENERAL, GENERATOR
GL	GLASS
GM	GAS METER
GPD	GALLONS PER DAY
GPM	GALLONS PER MINUTE
GR	GRADE

H

H	HIGH, HOUR
HDG	HOT-DIPPED GALVANIZED
HDPE	HIGH DENSITY POLYETHYLENE
HEX	HEAT EXCHANGER
HGT	HEIGHT
HH	HANDHOLE
HMC	HARNESSED MECHANICAL COUPLING
HMJ	HARNESSED MECHANICAL JOINT
HORIZ	HORIZONTAL
HP	HIGH POINT, HIGH PRESSURE, HORSEPOWER
HR	HOUR, HANDRAIL
HS	HIGH STRENGTH
HVAC	HEATING, VENTILATING AND AIR CONDITIONING
HWY	HIGHWAY
HYDRO	HYDROPNEUMATIC, HYDROGENERATION

I

ID	INSIDE DIAMETER
IE	INVERT ELEVATION
IF	INSIDE FACE
IN	INCH(ES)
INCL	INCLUDING
INCR	INCREASE
INST	INSTRUMENT, INSTRUMENTATION
INSUL	INSULATE, INSULATED, INSULATING
INT	INTERIOR, INTERNAL
INV	INVERT
IPS	IRON PIPE SIZE

J

JB	JUNCTION BOX
JT	JOINT

K

KVA	KILOVOLT AMPERE

L

L	LENGTH, LONG, LOW
LAT	LATERAL, LATITUDE
LB(S)	POUND(S)
LC	LENGTH OF CURVE
LF	LINEAR FEET
LH	LEFT HAND
LIN	LINEAL, LINEAR
LONG	LONGITUDE
LP LOW	POINT, LOW PRESSURE
LT	LEFT

M

MAINT	MAINTENANCE
MAN	MANUAL(LY)
MAX	MAXIMUM
MBR	MEMBRANE BIOREACTOR
MC	MECHANICAL COUPLING
MECH	MECHANICAL
MED	MEDIUM
MF	MICROFILTRATION
MFR	MANUFACTURER
MG	MILLION GALLONS
MG/L	MILLIGRAMS PER LITER
MGD	MILLION GALLONS PER DAY
MH	MAINTENANCE HOLE, MANHOLE
MIN	MINIMUM, MINUTE
MISC	MISCELLANEOUS
MJ	MECHANICAL JOINT
MJRG	MECHANICAL JOINT RETAINER GLAND
MJTR	MECHANICAL JOINT WITH TIE ROD
MM	MAGNETIC FLOWMETER
MO	MOTOR OPERATED
MSL	MEAN SEA LEVEL
MTD	MOUNTED
MTL	MATERIAL
MTR	MOTOR
MW	MONITORING WELL

N

N	NORTH, NORTHING, NITROGEN (TOTAL AS N)
N/A	NOT APPLICABLE
NAD	NORTH AMERICAN DATUM (HORIZONTAL)
NAVD	NORTH AMERICAN VERTICAL DATUM
NC	NORMALLY CLOSED
NF	NEAR FACE
NIC	NOT IN CONTRACT
NO	NORMALLY OPEN
NO.	NUMBER(S)
NOM	NOMINAL
NPSH	NET POSITIVE SUCTION HEAD
NPSHR	NET POSITIVE SUCTION HEAD REQUIRED
NPT	NATIONAL PIPE THREAD
NRS	NON-RISING STEM
NS	NEAR SIDE
NTS	NOT TO SCALE

O

OC	ON CENTER, ODOR CONTROL
OD	OUTSIDE DIAMETER
OF	OUTSIDE FACE, OVERFLOW
OH	OVERHEAD
OPER	OPERATING
OPNG	OPENING
OPP	OPPOSITE
OZ	OUNCE

P

P&ID	PIPING/PROCESS AND INSTRUMENTATION DIAGRAM
P	PHOSPHORUS (TOTAL AS P)
PPM	PARTS PER MILLION
PC	POINT OF CURVATURE
PCC	POINT OF COMPOUND CURVATURE
PCCP	PRESTRESSED CONCRETE CYLINDER PIPE
PE	PLAIN END
PG	PRESSURE GAUGE
PH	PIPE HANGER
PI	POINT OF INTERSECTION
PNL(S)	PANEL(S), PANELBOARD(S)
POC	POINT ON CIRCULAR CURVE, POINT OF CONNECTION
POT	POINT ON TANGENT
PP	POWER POLE
PROJ	PROJECTION
PRS	PRESSURE REDUCING STATION
PS	PIPE SUPPORT
PSF	POUNDS PER SQUARE FOOT
PSI	POUNDS PER SQUARE INCH
PSIA	POUNDS PER SQUARE INCH ABSOLUTE
PSIG	POUNDS PER SQUARE INCH GAUGE
PT	POINT OF TANGENCY, POINT
PVC	POLYVINYL CHLORIDE, POINT OF VERTICAL CURVATURE
PVT	POINT OF VERTICAL TANGENCY
PVCP	POLYVINYL CHLORIDE PIPE
PVI	POINT OF VERTICAL INTERSECTION
PVMT	PAVEMENT
PW	POTABLE WATER

Q

Q	RATE OF FLOW
QCPLG	QUICK COUPLING

R

R	RADIUS, RISER
R/W	RIGHT OF WAY
RCP	REINFORCED CONCRETE PIPE
RCCP	REINFORCED CONCRETE CYLINDER PIPE
RECIRC	RECIRCULATING
RED	REDUCER, REDUCING
REF	REFERENCE
REINF	REINFORCED, REINFORCING
REM	REMOVABLE, REMOVE
REQD	REQUIRED
RET	RETURN
REV	REVISION, REVISED, REVERSED
RH	RIGHT HAND
RO	REVERSE OSMOSIS
RPM	REVOLUTIONS PER MINUTE
RR	RAILROAD
RS	RISING STEM
RT	RIGHT
ROW	RIGHT OF WAY

S

S	SECOND, SLOPE, SOUTH
SCHED	SCHEDULE
SCFM	STANDARD CUBIC FEET PER MINUTE
SD	STORM DRAIN
SEC	SECOND
SECT	SECTION
SF	SQUARE FEET
SH	SHEET
SIM	SIMILAR
SP	STEEL PIPE
SPA	SPACING, SPACES
SPEC(S)	SPECIFICATION(S)
SPL	SPECIAL
SPLY	SUPPLY
SQ	SQUARE
SS	STAINLESS STEEL
SS	SANITARY SEWER
ST SWR	STORM SEWER
STA	STATION
STD	STANDARD
STL	STEEL
STOR	STORAGE
STR	STRUCTURAL
SUSP	SUSPENDED
SYM	SYMMETRICAL
SYS	SYSTEM

T

T	TELEPHONE, TOP
TAN	TANGENT
TBC	TOP BACK OF CURB
TBD	TO BE DETERMINED
TBM	TEMPORARY BENCHMARK
TC	TOP OF CURB
TDS	TOTAL DISSOLVED SOLIDS
TEMP	TEMPERATURE, TEMPORARY
TH	TEST HOLE
THD	THREADED
THK	THICK, THICKNESS
TOC	TOP OF CONCRETE, TABLE OF CONTENTS, TOTAL ORGANIC CARBON
TOF	TOP OF FOOTING
TOM	TOP OF MASONRY
TOP	TOP OF PIPE
TOW	TOP OF WALL
TP	TEST PIT
TRANS	TRANSFORMER
TS	TOTAL SOLIDS
TSS	TOTAL SUSPENDED SOLIDS
TW	TREATED WATER
TYP	TYPICAL

U

UB	UTILITY BOX
UF	ULTRAFILTRATION
UG	UNDERGROUND
UNO	UNLESS NOTED OTHERWISE
UP	UTILITY POLE
USGS	UNITED STATES GEOLOGICAL SURVEY
UV	ULTRAVIOLET

V

V	VALVE (SEE P&ID ABBREVIATIONS), VERTICAL, VOLT, VENT
VAC	VACUUM
VB	VALVE BOX
VC	VERTICAL CURVE
VCP	VITRIFIED CLAY PIPE
VERT	VERTICAL
VIF	VERIFY IN FIELD
VOCs	VOLATILE ORGANIC COMPOUNDS
VP	VAPOR PRESSURE

W

W	WEST, WIDE, WATER
W/	WITH
WC	WATER COLUMN
WEF	WATER ENVIRONMENT FEDERATION
W	WATER LEVEL
WM	WATER METER
W/O	WITHOUT
WP	WATERPROOF
WS	WATERSTOP
WS	WATER SURFACE
WSL	WATER SURFACE LEVEL
WT	WEIGHT
WW	WETWELL

X

x	BY, TIMES

Y

YH	YARD HYDRANT

NOTES:

1. FOR EQUIPMENT ABBREVIATIONS, INCLUDING FOR VALVES, REFER TO P&ID LEGEND AND ABBREVIATIONS DRAWINGS FUNCTION CODE ABBREVIATIONS.
2. FOR SYSTEM AND PROCESS STREAM ABBREVIATIONS, REFER TO P&ID LEGEND AND ABBREVIATIONS DRAWINGS SYSTEM CODE AND PROCESS CODE ABBREVIATIONS.
3. FOR PIPE MATERIAL AND INSULATION MATERIAL ABBREVIATIONS REFER TO P&ID LEGEND AND ABBREVIATIONS DRAWINGS PIPELINE MATERIAL CODE AND INSULATION MATERIAL CODE ABBREVIATIONS.

BLACK & VEATCH

Black & Veatch Corporation
Kansas City, Missouri

olsson

THIS DOCUMENT WAS ORIGINALLY ISSUED AND SEALED ON JANUARY 24, 2023 BY ANDREW J. HANSEN, A LICENSED PROFESSIONAL ENGINEER IN THE STATE OF ARKANSAS, E-14664

BEAVER WATER DISTRICT

WESTERN CORRIDOR PUMP STATION

100% SET

REVISIONS AND RECORD OF ISSUE

DESIGNED:	CJK
DETAILED:	BCS
CHECKED:	JCH
APPROVED:	AJH
DATE:	JANUARY 24, 2023
PROJECT NO.:	405654

PUMP STATION

CIVIL

ABBREVIATIONS

C-00-001

(SCALE BAR IS 4" AT FULL SCALE) 0 1/2 1 2 3 4

PLOTTED: 1/20/2023 7:33:00 AM
FILE: BIM 360://405654 - BWD Western Corridor Pump Station/405654-42-PUMP STATION.rvt
D11000

GENERAL SITEWORK NOTES:

1. THE HORIZONTAL DATUM IS ARKANSAS STATE PLANE CONVERTED TO GROUND.

2. ALL ELEVATIONS IN THIS SET OF DRAWINGS ARE BASED UPON NAVD 29.

3. PROJECT BENCHMARKS ARE AS FOLLOWS:

ID:	NORTHING	EASTING	ELEVATION	DESCRIPTION
030427	697993.5500	658140.8900	1251.5780	FND 1/2 WITH CAP 1658
300090	699354.3780	656721.8810	1234.9370	FND /BLEW
300091	699389.2900	656899.4530	1238.5170	FND /BUSTEDORANGECAP
300092	699326.8430	657171.1490	1235.7190	FND /BENTIP SHOTATBASE
300093	699352.4980	657563.7760	1244.2930	FND /BENTBUSTEDORANGECAP SHOT AT BASE
300094	697992.0300	658175.7870	1249.6250	FND /IP
300095	697752.1100	658166.5400	1261.8720	FND /MAG
300096	697753.3620	658131.6320	1261.7170	FND /GAGNER
300100	698004.2860	657853.4570	1267.0760	FND /PINK CAP UNDERCONC
300101	698072.8710	656000.9020	1256.7720	FND /LIMESTONE
300102	698990.9980	656707.9480	1237.7730	FND /BLEW1532
300178	696812.5290	658237.5300	1279.5080	FND /HWYMON
300200	697199.5510	658195.6770	1279.4200	FND /HWYMON
300264	699289.2890	658227.5440	1244.4930	FND /BENT IP

4. ALL ABOVE GROUND STRUCTURE LOCATIONS ARE TO THE OUTSIDE FACE OF SUBSTRUCTURE CONCRETE WALL AT FINISH GRADE UNLESS NOTED OTHERWISE. ALL BURIED STRUCTURE LOCATIONS ARE TO THE OUTSIDE FACE OF CONCRETE WALL UNLESS NOTED OTHERWISE. ALL YARD PIPING LOCATIONS & STATIONING ARE FROM THE OUTSIDE FACE OF SUBSTRUCTURE CONCRETE WALL UNLESS NOTED OTHERWISE. ALL OUTSIDE FACE OF STRUCTURES, C/L OF STRUCTURES, & C/L OF PLANT DRIVES ARE ORIENTED NORTH & SOUTH, PARALLEL & PERPENDICULAR TO THE COORDINATE GRID SYSTEM UNLESS NOTED OTHERWISE.

5. NOT ALL ELECTRICAL DUCTBANKS & LIGHTING ARE SHOWN. SEE ELECTRICAL DRAWINGS.

6. EXISTING UTILITIES AND STRUCTURES (UNDERGROUND, SURFACE, OR OVERHEAD) ARE INDICATED ONLY TO THE EXTENT THAT SUCH INFORMATION WAS KNOWN, OR MADE AVAILABLE TO, OR DISCOVERED BY THE ENGINEER IN PREPARING THE DRAWINGS. THE LOCATIONS, CONFIGURATIONS, AND ELEVATIONS OF SUBSURFACE FACILITIES AND UTILITIES ARE APPROXIMATE, AND NOT ALL UTILITIES AND FACILITIES MAY BE INDICATED. OVERHEAD UTILITIES ARE NOT INDICATED IN ARCHITECTURAL ELEVATIONS, PROFILE OR SECTION DRAWINGS. THE ENGINEERING INVESTIGATIONS, LOCATION, AND DESIGNATION OF SUBSURFACE UTILITIES INDICATED IN THESE CONTRACT DOCUMENTS HAS BEEN PERFORMED TO QUALITY LEVEL C IN ACCORDANCE WITH GENERALLY ACCEPTED ENGINEERING PRINCIPLES AND PRACTICES AS OUTLINED IN ASCE STANDARD AND GUIDELINE BULLETIN CI/ASCE 38-02 UNLESS OTHERWISE DESIGNATED. WHERE SUCH ACTIVITIES HAVE BEEN TO A HIGHER LEVEL OF QUALITY, THE HIGHER QUALITY LEVEL FOR THE AFFECTED AREAS IS INDICATED IN THE CONTRACT DOCUMENTS.

7. CONTRACTOR'S STAGING, PARKING AND MATERIAL STORAGE SHALL BE LIMITED TO THE SPACE(S) DESIGNATED ON THE DRAWINGS. PROVIDING ADDITIONAL STORAGE OR PARKING SHALL BE THE RESPONSIBILITY OF THE CONTRACTOR.

8. CALL BEFORE YOU DIG. CONTRACTOR SHALL VERIFY PRECISE LOCATIONS AND ELEVATIONS OF ALL UTILITIES AND STRUCTURES, WHETHER INDICATED ON THE DRAWINGS OR NOT, IN THE FIELD IN ADVANCE OF EXCAVATING, BY CONTACTING ALL UTILITIES AND OTHER AGENCIES, AND BY PROSPECTING. CONTRACTOR SHALL BE RESPONSIBLE FOR REMOVAL, DEMOLITION, RECONSTRUCTION, AND RECONNECTION OF EXISTING FACILITIES AS REQUIRED TO COMPLETE THE WORK. IF REQUIRED AFTER FIELD VERIFICATION, CONTRACTOR SHALL COORDINATE WITH THE ENGINEER TO DETERMINE ANY NECESSARY MODIFICATIONS TO PROPOSED NEW WORK.

9. BEFORE CONSTRUCTION IS STARTED, CONTRACTOR SHALL COORDINATE WITH THE OWNER OF EACH UTILITY AND DEFINE THE REQUIREMENTS AND METHODS TO ACCOMMODATE THE PROTECTION, TEMPORARY SUPPORT, ADJUSTMENT, OR RELOCATION OF ANY UTILITIES AFFECTED BY THE PROPOSED NEW WORK.

10. CONTRACTOR SHALL COMPLY WITH THE GOVERNING AGENCY NPDES CONSTRUCTION REQUIREMENTS, AND SHALL PROVIDE APPROPRIATE MITIGATION MEASURES OR PROTECTION AND RESTORATION AT ALL LOCATIONS AS REQUIRED BY THEIR OPERATIONS, AND AS DIRECTED BY ENGINEER. SPECIAL CONSTRUCTION REQUIREMENTS, TEMPORARY PROTECTIVE FENCING OR BARRICADES, SHEETING, SHORING, EROSION PROTECTION, AND SURFACE RESTORATION AT CERTAIN LOCATIONS ARE INDICATED ON THE DRAWINGS TO BRING CONTRACTOR'S ATTENTION TO SENSITIVE AREAS.

11. THE CONTRACTOR SHALL BE RESPONSIBLE FOR THE PROTECTION OF ALL PROPERTY CORNER MARKERS. PROPERTY CORNER MARKERS DAMAGED BY CONSTRUCTION ACTIVITIES SHALL BE REESTABLISHED BY A PROFESSIONAL SURVEYOR LICENSED IN THE STATE OF ARKANSAS.

12. THE LOCATION OF BORINGS INDICATED ON THE DRAWINGS IS APPROXIMATE. CONTRACTOR SHALL REFER TO THE GEOTECHNICAL REPORT FOR ACTUAL BORING LOCATIONS AND THE FINDINGS OF THE GEOTECHNICAL INVESTIGATIONS.

13. CONTRACTOR SHALL PROTECT AND MAINTAIN ALL EXISTING TREES, SHRUBS, AND PLANTS UNLESS OTHERWISE NOTED.

14. CONTRACTOR SHALL INSTALL ALL PIPELINES, PAVING, WALKWAYS, AND CURB AND GUTTER AT A UNIFORM GRADE BETWEEN ELEVATIONS DEPICTED ON THE DRAWINGS.

15. THE CONTRACTOR'S OPERATIONS SHALL CONFORM TO THE RULES AND REGULATIONS OF THE STATE CONSTRUCTION SAFETY ORDERS PERTAINING TO EXCAVATION AND TRENCHING.

16. CONTRACTOR SHALL FIELD VERIFY PRECISE LOCATION, ELEVATION, AND ARRANGEMENT OF CONNECTIONS OF NEW PIPELINES WITH EXISTING PIPELINES BASED ON FIELD CONDITIONS, INCLUDING EXPOSING EXISTING PIPING PRIOR TO FABRICATING NEW PIPING. CONTRACTOR SHALL PROVIDE FITTINGS, ADAPTERS, SOLID SLEEVE CLOSURES, AND HARNESSED MECHANICAL COUPLING; ROTATE FITTINGS; DEFLECT JOINTS; AND MODIFY EXISTING PIPING AS APPLICABLE AND AS REQUIRED TO MAKE CONNECTIONS, INCLUDING ADJUSTMENTS FOR ANY OFFSETS IN CENTERLINE ELEVATIONS BETWEEN PIPELINES. CONTRACTOR SHALL PROVIDE TEMPORARY PLUG WITH FACTORY OUTLET SIZED AS REQUIRED FOR CONTRACTOR'S TESTING AND DISINFECTION WORK BEFORE MAKING CONNECTION, WHEN APPLICABLE. CONTRACTOR SHALL COORDINATE MAKING EACH CONNECTION WITH THE OWNER.

17. THE CONTRACTOR SHALL BE RESPONSIBLE FOR THE RESTORATION OF THE RIGHT-OF-WAY AND FOR DAMAGED IMPROVEMENTS SUCH AS CURBS, DRIVEWAYS, SIDEWALKS, STREET LIGHT AND TRAFFIC SIGNAL LOOP LEAD INS, SIGNAL POLES, IRRIGATION SYSTEMS, ETC. DAMAGED IMPROVEMENTS SHALL BE REPAIRED IN CONFORMANCE WITH THE LATEST GOVERNING STANDARDS AND TO THE OWNER'S SATISFACTION.

18. ALL DAMAGE CAUSED DIRECTLY OR INDIRECTLY TO THE STREET SURFACE OR SUBSURFACE OUTSIDE OF THE PAVEMENT CUT AREA SHALL BE REGARDED AS A PART OF THE STREET CUT REPAIR. THIS INCLUDES ANY SCRAPES, GOUGES, CUTS, CRACKING, DEPRESSIONS AND/OR ANY OTHER DAMAGE CAUSED BY THE CONTRACTOR DURING THE EXECUTION OF THE WORK. THESE AREAS WILL BE INCLUDED IN THE TOTAL AREA OF REPAIR. ALL REPAIRS SHALL BE AT THE CONTRACTOR'S EXPENSE AND SHALL MEET ALL REQUIREMENTS AND SPECIFICATION OF THE CONTRACT DOCUMENTS.

19. NOT ALL UTILITIES ARE SHOWN. REFER TO THE WEST MILLER ROAD IMPROVEMENTS FOR ADDITIONAL UTILITY COVERAGE ALONG THE MILLER ROAD CORRIDOR.

BING MAPS DISCLAIMER:
NOTE: MICROSOFT PRODUCT SCREEN SHOT(S) REPRINTED WITH PERMISSION FROM MICROSOFT CORPORATION. AERIAL IMAGERY PROVIDED BY BING MAPS. © 2022 MICROSOFT CORPORATION © DIGITALGLOBE ©CNES (2019) DISTRIBUTION AIRBUS DS.

(SCALE BAR IS 4" AT FULL SCALE) 0 1/2 1 2 3 4

PLOTTED: 1/20/2023 9:10:51 AM
FILE: C:\PW_WORKING\BVW_AMERICAS\D1129176\C-00-002.DWG
D1100
D1000

BLACK & VEATCH
Black & Veatch Corporation
Kansas City, Missouri

olsson

THIS DOCUMENT WAS ORIGINALLY ISSUED AND SEALED ON JANUARY 24, 2023 BY ANDREW J. HANSEN, A LICENSED PROFESSIONAL ENGINEER IN THE STATE OF ARKANSAS, E-14664

BEAVER WATER DISTRICT

WESTERN CORRIDOR PUMP STATION

100% SET

REVISIONS AND RECORD OF ISSUE

DESIGNED:	CJK
DETAILED:	NGH
CHECKED:	JCH
APPROVED:	AJH
DATE:	JANUARY 24, 2023
PROJECT NO.:	405654

SITE

CIVIL

GENERAL ARRANGEMENT AND CIVIL SITEWORK NOTES

C-00-002

TREE PRESERVATION NOTES

1. GRADING AROUND TREES TO BE LIMITED TO OUTSIDE THE DRIPLINE UNLESS OTHERWISE NOTED ON THESE PLANS.

2. THERE SHALL BE NO GRADING OR FILLING WITHIN THE PROTECTED CRITICAL ROOT ZONES OF PROTECTED TREES UNLESS OTHERWISE NOTED ON THESE PLANS.

3. NO VEHICLES OR EQUIPMENT SHALL BE DRIVEN OR PARKED UNDER THE DRIPLINE OF PROTECTED TREES. NO MATERIALS SHALL BE STORED UNDER THE DRIPLINE OF PROTECTED TREES.

4. TREE FENCE AND SILT FENCE FOR ALL PROTECTED TREES MUST BE PROPERLY MAINTAINED THROUGHOUT CONSTRUCTION.

5. ALL REQUIRED TREE, SILT FENCING AND COMPOST FILTER SOCK SHALL REMAIN IN PLACE UNTIL ALL GRADING AND LANDSCAPING ACTIVITIES HAVE CEASED AND SHALL ONLY BE REMOVED UPON THE REVIEW AND APPROVAL BY THE LANDSCAPE ARCHITECT.

6. ATTACHMENTS (WIRES, FENCES, ETC.) OTHER THAN THOSE APPROVED FOR GUYING, BRACING OR WRAPPING MUST NOT BE ATTACHED TO PROTECTED TREES.

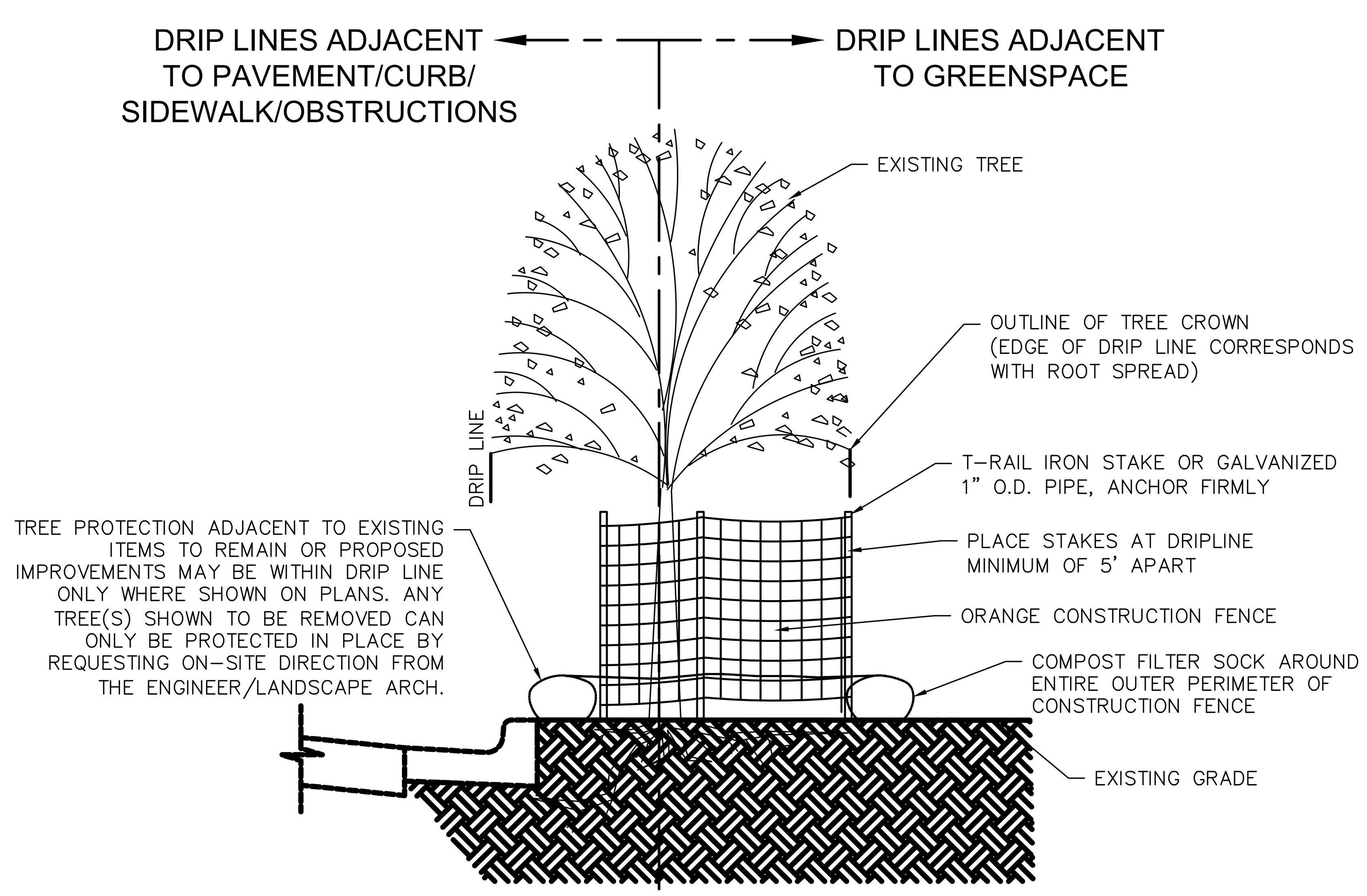

TREE PROTECTION DETAIL

NOT TO SCALE

POLLUTION PREVENTION PROCEDURE NOTES:

1. HANDLING AND DISPOSAL OF HAZARDOUS MATERIALS:

DO:
- PREVENT SPILLS
- USE PRODUCTS UP
- FOLLOW LABEL DIRECTIONS FOR DISPOSAL
- REMOVE LIDS FROM EMPTY BOTTLES AND CANS WHEN DISPOSING TRASH
- RECYCLE WASTES WHENEVER POSSIBLE

DON'T:
- DON'T POUR WASTE INTO SEWERS OR WATERWAYS ON THE GROUND
- DON'T POUR WASTE DOWN THE SINK, FLOOR DRAIN OR SEPTIC TANKS
- DON'T BURY CHEMICALS OR CONTAINERS, OR DISPOSE OF THEM WITH OTHER WASTE
- DON'T BURN OR MIX CHEMICALS OR CONTAINERS
- DON'T WASH SEDIMENT DOWN STORM SEWER INLETS

2. CONTAINERS SHALL BE PROVIDED FOR COLLECTION OF ALL WASTE MATERIAL INCLUDING CONSTRUCTION DEBRIS, TRASH, PETROLEUM PRODUCTS AND ANY HAZARDOUS MATERIALS TO BE USED ONSITE. ALL WASTE MATERIAL SHALL BE DISPOSED OF AT FACILITIES APPROVED FOR THAT MATERIAL.

3. NO WASTE MATERIALS SHALL BE BURIED ON-SITE.

4. MIXING, PUMPING, TRANSFERRING OR OTHERWISE HANDLING CONSTRUCTION CHEMICALS SUCH AS FERTILIZER, LIME, ASPHALT, CONCRETE DRYING COMPOUNDS, AND ALL OTHER POTENTIALLY HAZARDOUS MATERIALS SHALL BE PERFORMED IN AN AREA AWAY FROM ANY WATERCOURSE, DITCH OR STORM DRAIN.

5. EQUIPMENT FUELING AND MAINTENANCE, OIL CHANGING, ETC., SHALL BE PERFORMED ONLY IN AN AREA DESIGNATED FOR THAT PURPOSE. THE DESIGNATED AREA SHALL BE EQUIPPED FOR RECYCLING OIL AND CATCHING SPILLS.

6. CONCRETE WASH WATER SHALL NOT BE ALLOWED TO FLOW DIRECTLY TO STORM SEWERS, STREAMS, DITCHES, LAKES, ETC WITHOUT BEING TREATED. A CONCRETE WASHOUT AREA SHALL BE PROVIDED. SEE DETAIL ON THIS SHEET.

7. ALL PAINT, SOLVENTS, PETROLEUM PRODUCTS AND PETROLEUM WASTE PRODUCTS, AND STORAGE CONTAINERS (SUCH AS DRUMS, CANS, OR CARTONS) SHALL BE STORED ACCORDING TO BMPS. THE MATERIALS EXPOSED TO PRECIPITATION SHALL BE STORED IN WATERTIGHT, STRUCTURALLY SOUND, CLOSED CONTAINERS. ALL CONTAINERS SHALL BE INSPECTED FOR LEAKS OR SPILLAGE DURING THE ONCE PER WEEK INSPECTION OF BMPS. IF SUBSTANCES SUCH AS OIL, DIESEL FUEL, HYDRAULIC FLUID, ANTIFREEZE, ETC. ARE SPILLED, LEAKED, OR RELEASED ONTO SOIL, THE SOIL SHALL BE DUG UP AND PROPERLY DISPOSED OF. SPILLS ON PAVEMENT SHALL BE ABSORBED WITH SAWDUST, KITTY LITTER OR PRODUCT DESIGNED FOR THAT PURPOSED AND DISPOSED OF AT A LICENSED SANITARY LANDFILL. HAZARDOUS OR INDUSTRIAL WASTES SUCH AS MOST SOLVENTS, GASOLINE, OIL-BASED PAINTS, AND CEMENT CURING COMPOUNDS REQUIRE SPECIAL HANDLING. THESE MATERIALS WILL BE REMOVED FROM THE SITE AND RECYCLED OR DISPOSED OF IN ACCORDANCE WITH MoDNR REQUIREMENTS.

8. STATE LAW REQUIRES THE PARTY RESPONSIBLE FOR A PETROLEUM PRODUCT SPILL IN EXCESS OF 50 GALLONS TO REPORT THE SPILL TO MoDNR (573-634-2436) AS SOON AS PRACTICAL AFTER DISCOVERY. FEDERAL LAW REQUIRES THE RESPONSIBLE PARTY TO REPORT ANY RELEASE OF OIL IF IT REACHES OR THREATENS A SEWER, LAKE, CREEK, STREAM, RIVER, GROUNDWATER, WETLAND, OR AREA, LIKE A ROAD DITCH, THAT DRAINS INTO ONE OF THE ABOVE.

9. SUFFICIENT TEMPORARY TOILET FACILITIES TO SERVE THE NUMBER OF WORKERS ON THE SITE SHALL BE PROVIDED. THE FACILITIES SHALL BE SERVICED FREQUENTLY TO MAINTAIN A SANITARY CONDITIONS.

TEMPORARY SEEDING REQUIREMENTS:

TOPSOIL REQUIREMENTS:
TEMPORARY SEEDING -
LOOSEN COMPACTED SOILS TO A DEPTH OF 4 INCHES. IF RAINFALL CAUSES THE SURFACE TO BECOME SEALED OR CRUSTED, LOOSEN IT JUST PRIOR TO SEEDING. SLOPES STEEPER THAN 33 PERCENT (3:1) GRADE SHOULD BE GROOVED OR FURROWED ON THE CONTOUR BEFORE SEEDING. A GOOD SEEDBED IS WELL PULVERIZED, LOOSE, AND UNIFORM.

LIME REQUIREMENTS:

TEMPORARY SEEDING -
LIME SHOULD BE APPLIED ACCORDING TO SOIL TEST RECOMMENDATIONS. IF THE PH OF THE SOIL IS UNKNOWN, LIME SHALL BE INCORPORATED INTO THE TOP 4 INCHES OF SOIL AT THE RATE OF 1500 POUNDS EFFECTIVE NEUTRALIZING MATERIAL (ENM) PER ACRE. SOILS WITH A PH OF SIX OR HIGHER NEED NOT BE LIMED.

FERTILIZER REQUIREMENTS:

TEMPORARY SEEDING -
FERTILIZER SHOULD BE APPLIED BASED ON SOIL TESTS. WHEN THESE ARE NOT POSSIBLE, A 10-10-10 GRADE FERTILIZER SHALL BE INCORPORATED INTO THE TOP 4 INCHES OF SOIL AT THE RATE OF 200 POUNDS PER ACRE.

SEED REQUIREMENTS:

TEMPORARY SEEDING - SEED MIX SHALL CONSIST OF ANY COMBINATION OF TALL FESCUE, ANNUAL RYEGRASS, SUDAN, MILLET, WHEAT, OR OATS. SEED MIXTURE SHALL BE APPLIED AT A RATE OF 200 POUNDS PER ACRE.

DORMANT SEASON SEEDING - SEED MIX SHALL CONSIST OF 80 PERCENT (80%) TALL FESCUE, TEN PERCENT (10%) ANNUAL RYEGRASS, AND TEN PERCENT (10%) SPRING OATS. SEED MIXTURE SHALL BE APPLIED AT A RATE OF 600 POUNDS PER ACRE.

MULCH REQUIREMENTS:

TEMPORARY SEEDING -
WHERE SLOPES ARE LESS THAN 25 PERCENT (4:1) GRADE, CEREAL GRAIN MULCH IS REQUIRED AT THE RATE OF 100 POUNDS PER 1,000 SQUARE FEET (4,500 LBS/ACRE). CEREAL GRAIN MULCH SHALL MEET THE REQUIREMENTS OF SECTION 802 OF THE MISSOURI STATE SPECIFICATIONS FOR HIGHWAY CONSTRUCTION FOR TYPE 1 MULCH. WHERE SLOPES ARE 25 PERCENT (4:1) OR GREATER GRADE, TYPE 3 MULCH ("HYDROMULCH") MEETING THE REQUIREMENTS OF SECTION 802 OF THE STATE SPECIFICATIONS SHALL BE USED. TYPE 3 MULCH SHALL BE APPLIED AT A MINIMUM RATE OF 2,000 LBS/ACRE.

DATES FOR SEEDING:

TEMPORARY SEEDING - CAN OCCUR DURING ANY SEASON, HOWEVER WINTER IS THE LEAST TOLERANT.
DORMANT SEASON SEEDING - DECEMBER 15 TO FEBRUARY 29

EROSION CONTROL NOTES:

1. THE CONTRACTOR SHALL BE RESPONSIBLE FOR MAINTENANCE OF ALL EROSION & SEDIMENT CONTROL MEASURES AND PRACTICES THROUGHOUT THE PROJECT. ANY AND ALL FINES ASSOCIATED WITH EROSION CONTROL VIOLATIONS WILL BE THE CONTRACTOR'S RESPONSIBILITY.
2. EROSION CONTROL IS THE CONTRACTOR'S RESPONSIBILITY. THIS PLAN SHOULD BE USED AS A GUIDE AND REPRESENTS THE MINIMUM EROSION CONTROL DEVICES REQUIRED.
3. EROSION CONTROL MEASURES WILL BE MAINTAINED AT ALL TIMES. ADDITIONAL EROSION & SEDIMENT CONTROL MEASURES WILL BE INSTALLED IF DEEMED NECESSARY BY ON-SITE INSPECTION.
4. CONTRACTOR IS RESPONSIBLE FOR REPAIRING ALL EROSION & SEDIMENT CONTROL DEVICES AFTER EACH RAINFALL EVENT.
5. THE CONTRACTOR SHALL PROVIDE ANY FURTHER EROSION CONTROL MEASURES IN ADDITION TO THOSE LISTED TO ENSURE THAT SILT WILL NOT LEAVE THE PROJECT CONFINES.
6. THE CONTRACTOR IS RESPONSIBLE FOR REMOVING THE TEMPORARY EROSION & SEDIMENT CONTROL DEVICES AFTER COMPLETION OF CONSTRUCTION AND ONLY WHEN AREAS HAVE BEEN STABILIZED WITH A HEALTHY STAND OF PERMANENT VEGETATION.
7. THE CONTRACTOR IS RESPONSIBLE FOR REMOVING SILT FROM SITE IF NOT REUSABLE ON-SITE AND ASSURING PLAN ALIGNMENT AND GRADE IN ALL DITCHES AT COMPLETION OF CONSTRUCTION.
8. THE CONTRACTOR SHALL ENSURE THAT ALL DRAINAGE STRUCTURES, FLUMES, PIPES, ETC. ARE CLEANED OUT AND WORKING PROPERLY AT TIME OF ACCEPTANCE.
9. THE CONTRACTOR SHALL PROVIDE ANY TEMPORARY STABILIZATION AS REQUIRED.
10. THE CONTRACTOR SHALL PROVIDE A TEMPORARY CONSTRUCTION ENTRANCE FOR VEHICULAR TRAFFIC AT LOCATION SHOWN.
11. ALL EROSION CONTROL DEVICES SHALL CONFORM TO THE APPLICABLE SECTIONS OF THE STANDARD SPECIFICATIONS AND DESIGN CRITERIA OF THE ENGINEERING DIVISION, DEPARTMENT OF PUBLIC WORKS, CITY OF SPRINGDALE, ARKANSAS.
12. THE CONTRACTOR WILL BE REQUIRED TO CLEAN THE STREETS OF DEPOSITED MUD AS FREQUENTLY AS NEEDED PER APPLICABLE AREA BEST MANAGEMENT PRACTICES. CONTRACTOR SHALL REFER TO NWA 2014 BMP MANUAL FOR THE STREET CLEANING BMP FOR SPECIFIC STREET CLEANING GUIDELINES.
13. SEE TEMPORARY VEGETATION REQUIREMENT NOTES ON THIS SHEET FOR EXPOSED SOIL WHERE NO ACTIVITY WILL OCCUR FOR MORE THAN 14 DAYS.
14. CONTRACTOR IS RESPONSIBLE FOR PHASED INSTALLATION OF EROSION CONTROL BMP'S IN ORDER TO PREVENT SEDIMENT FROM BREACHING THE LIMITS OF DISTURBANCE.

CITY OF SPRINGDALE GENERAL NOTES:

STOCKPILING OF CONSTRUCTION SPOIL MATERIAL AT PARTICULAR LOCATIONS SHALL ONLY BE ALLOWED FOR A LIMITED TIME PERIOD, NOT TO EXCEED (6) MONTHS. PRIOR TO A FINAL INSPECTION OF THE GRADING PERMIT, THE FOLLOWING STANDARDS SHALL BE ACHIEVED FOR COMPLETION OF CONSTRUCTION:

a) DEVELOPMENT AND GRADING WITHIN THE DISTURBED AREA IS COMPLETE AND MATCHES PLANS AS APPROVED BY THE PLANNING COMMISSION, AND
b) THE DISTURBED SOIL AREA IS OBSERVED TO HAVE 80% GRASS COVERAGE AND 100% STABILITY, AND
c) NO SLOPES STEEPER THAN A 3:1 PITCH UNLESS OTHERWISE APPROVED IN WRITING BY THE DIRECTOR OF ENGINEERING, AND
d) NOTICE OF VIOLATIONS ISSUED HAVE ALL CORRECTIVE ACTIONS APPROVED WITH AN INSPECTION REPORT SIGNED BY A REPRESENTATIVE OF THE DIRECTOR OF ENGINEERING, AND
e) ALL HEAVY EQUIPMENT, STOCKPILES, AND CONSTRUCTION SITE MATERIALS HAVE BEEN REMOVED FROM THE CONSTRUCTION SITE.

ROOT PRUNING NOTES:

1. ROOT PRUNING IS SUBSIDIARY TO OTHER BID ITEMS.
2. ROOT PRUNING SHOULD BE COORDINATED WITH THE TREE PROTECTION FENCING. IN SOME CASES, THAT FENCE LINE IS ON THE ROOT CUT, AND PROVISIONS FOR ROOT PRUNING MAY NEED TO BE ACCOMMODATED BEFORE FENCE IS ERECTED.
3. CAREFULLY EXPOSE ROOTS WITHIN THE LIMITS OF CONSTRUCTION AND MARK FOR PRUNING. THE CITY OF SPRINGFIELD URBAN FORESTER SHALL BE CONTACTED TO REVIEW PROPOSED ROOTS PRIOR TO TRENCHING, EXCAVATION, OR CUTTING TO DETERMINE THE IMPACT ON ANY STRUCTURAL CRITICAL ROOTS AND THE CLOSEST POINT TO THE TREES THAT SOIL MAY BE DISTURBED.
4. ROOT PRUNING CAN BE ACCOMPLISHED WITH CIRCULAR SAWS OF VARYING TYPES AND/OR A ROTARY TYPE STUMP GRINDER TO A DEPTH OF 18" OR TO THE MAXIMUM DEPTH OF THE REQUIRED GRADING CUT, WHICHEVER IS LESS. SAW BLADE AND GRINDER TEETH MUST BE SHARPENED AND CLEANED PRIOR TO USE. TRENCHING MACHINES ARE NOT ALLOWED IN ROOT PRUNING OPERATIONS.
5. ROOTS OVER 1 INCH IN DIAMETER MUST BE CLEANLY AND SHARPLY CUT WITH A HAND SAW.
6. PRUNING CUTS SHALL BE FLUSH WITH THE SIDE OF THE TRENCH CLOSEST TO THE TREE.
7. A CERTIFIED ARBORIST SHALL BE CALLED TO REVIEW ANY ROOTS OVER 2 INCHES IN DIAMETER ENCOUNTERED DURING EXCAVATION AND/OR CONSTRUCTION ACTIVITIES TO DETERMINE STRUCTURAL STABILITY OF THE TREE.

BLACK & VEATCH

Black & Veatch Corporation
Kansas City, Missouri

olsson

THIS DOCUMENT WAS ORIGINALLY ISSUED AND SEALED ON JANUARY 24, 2023 BY MATTHEW K. LOOS, A LICENSED PROFESSIONAL ENGINEER IN THE STATE OF ARKANSAS, E-19979

BEAVER WATER DISTRICT

WESTERN CORRIDOR PUMP STATION

100% SET

REVISIONS AND RECORD OF ISSUE

DESIGNED:	RAC
DETAILED:	MVC
CHECKED:	RAC
APPROVED:	MKL
DATE: JANUARY 24, 2023	
PROJECT NO.:	405654

SITE

CIVIL

EROSION CONTROL NOTES

C-00-003

(SCALE BAR IS 4" AT FULL SCALE) 0 1/2 1 2 3 4

PLOTTED: 1/23/2023 4:26:57 PM
FILE: C:\PW_WORKING\BVW_AMERICAS\D1129176\C-00-003.DWG
FD11000
D11000

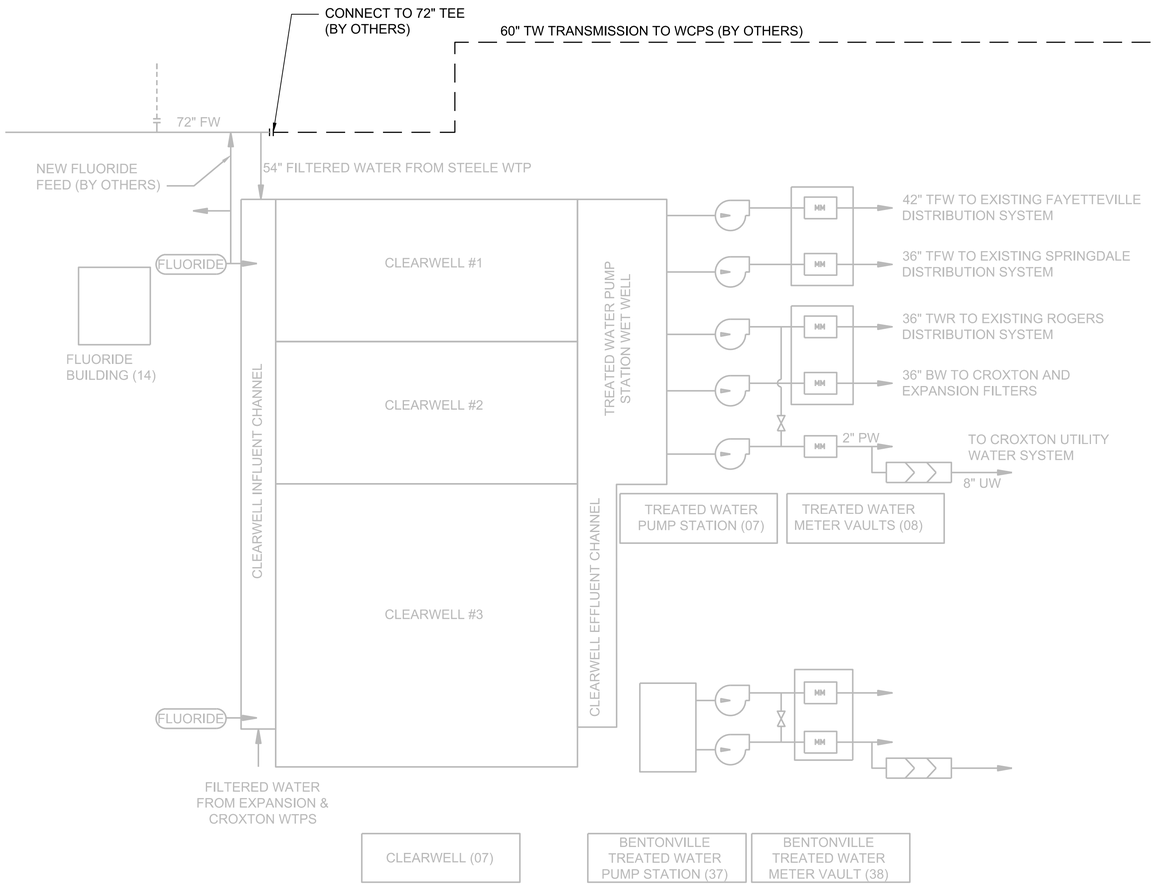

CLEARWELL AND TREATED WATER PUMP STATION
(BWD TREATMENT PLANT)

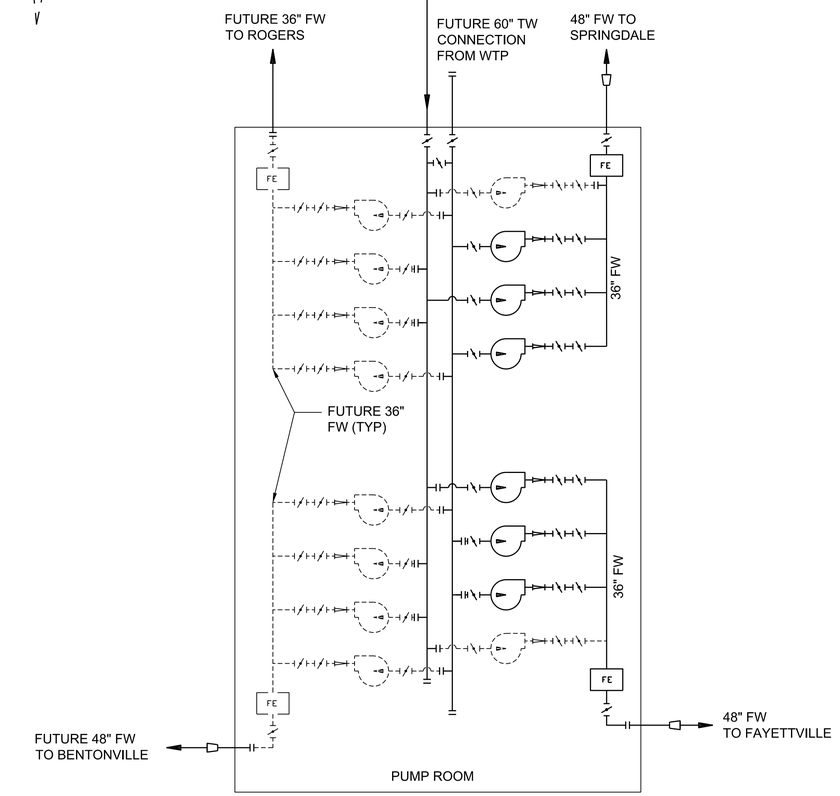

WESTERN CORRIDOR PUMP STATION
(WCPS REMOTE SITE)

(SCALE BAR IS 4" AT FULL SCALE) 0 1/2 1 2 3 4

PLOTTED: 1/20/2023 9:14:05 AM
FILE: C:\PW_WORKINGBVW_AMERICAS\D1129176\C-00-004.DWG
FS11000
D1000

Black & Veatch Corporation
Kansas City, Missouri

THIS DOCUMENT WAS ORIGINALLY ISSUED AND SEALED ON JANUARY 24, 2023 BY ANDREW J. HANSEN, A LICENSED PROFESSIONAL ENGINEER IN THE STATE OF ARKANSAS, E-14664

BEAVER WATER DISTRICT

WESTERN CORRIDOR PUMP STATION

100% SET

REVISIONS AND RECORD OF ISSUE

DESIGNED:	CJK
DETAILED:	NGH
CHECKED:	JCH
APPROVED:	AJH
DATE:	JANUARY 24, 2023
PROJECT NO.:	405654

CIVIL

PROCESS SCHEMATIC

C-00-004

6 OF 159

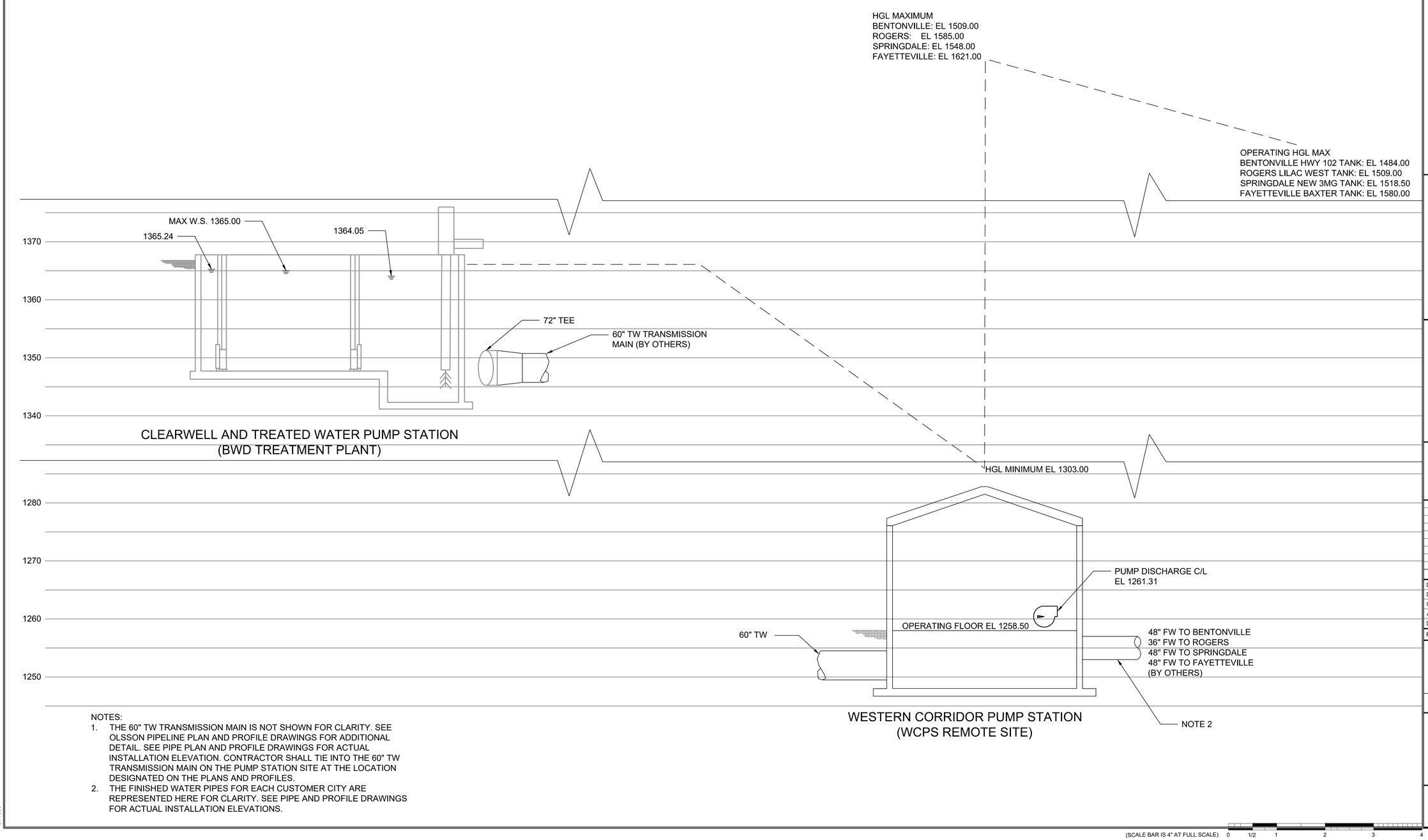

NOTES:

1. THE 60" TW TRANSMISSION MAIN IS NOT SHOWN FOR CLARITY. SEE OLSSON PIPELINE PLAN AND PROFILE DRAWINGS FOR ADDITIONAL DETAIL. SEE PIPE PLAN AND PROFILE DRAWINGS FOR ACTUAL INSTALLATION ELEVATION. CONTRACTOR SHALL TIE INTO THE 60" TW TRANSMISSION MAIN ON THE PUMP STATION SITE AT THE LOCATION DESIGNATED ON THE PLANS AND PROFILES.
2. THE FINISHED WATER PIPES FOR EACH CUSTOMER CITY ARE REPRESENTED HERE FOR CLARITY. SEE PIPE AND PROFILE DRAWINGS FOR ACTUAL INSTALLATION ELEVATIONS.

(SCALE BAR IS 4" AT FULL SCALE) 0 1/2 1 2 3 4

PLOTTED: 1/20/2023 9:16:11 AM
FILE: C:\PW_WORKING\BVW_AMERICAS\D1129176\C-00-005.DWG
FD11000
FD11000

Black & Veatch Corporation
Kansas City, Missouri

olsson

THIS DOCUMENT WAS ORIGINALLY ISSUED AND SEALED ON JANUARY 24, 2023 BY ANDREW J. HANSEN, A LICENSED PROFESSIONAL ENGINEER IN THE STATE OF ARKANSAS, E-14664

BEAVER WATER DISTRICT

WESTERN CORRIDOR PUMP STATION

100% SET

REVISIONS AND RECORD OF ISSUE

DESIGNED:	CJK
DETAILED:	NGH
CHECKED:	JCH
APPROVED:	AJH
DATE:	JANUARY 24, 2023
PROJECT NO.:	405654

CIVIL

HYDRAULIC PROFILE

C-00-005

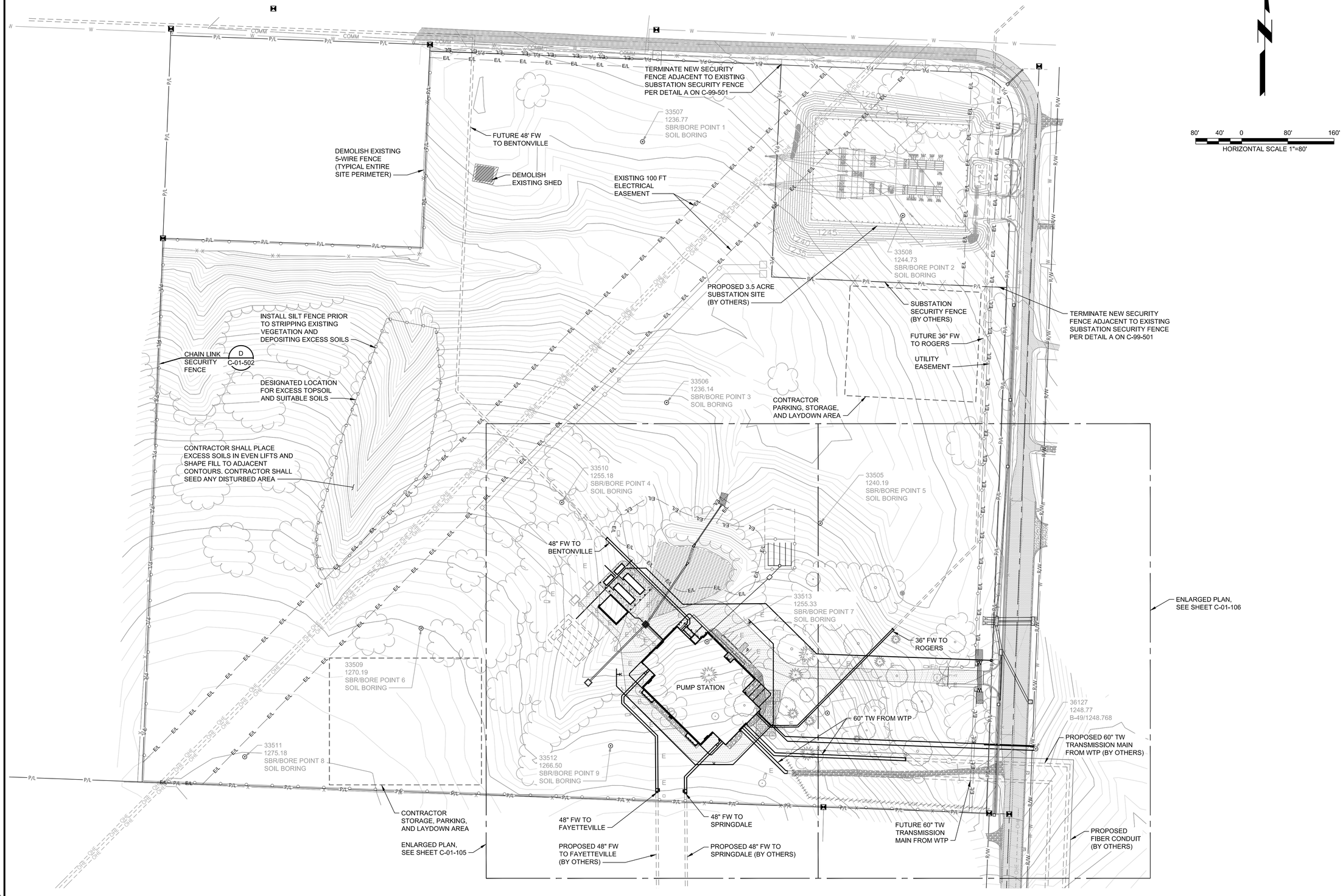

PLOTTED: 1/23/2023 10:11:34 AM
FILE: C:\PW_WORKING\BVW_AMERICAS\D1129176\C-01-101.DWG
ET1000
ET1004

(SCALE BAR IS 4" AT FULL SCALE) 0 1/2 1 2 3 4

BLACK & VEATCH

Black & Veatch Corporation
Kansas City, Missouri

olsson

THIS DOCUMENT WAS ORIGINALLY ISSUED AND SEALED ON JANUARY 24, 2023 BY ANDREW J. HANSEN, A LICENSED PROFESSIONAL ENGINEER IN THE STATE OF ARKANSAS, E-14664

BEAVER WATER DISTRICT

WESTERN CORRIDOR PUMP STATION

100% SET

REVISIONS AND RECORD OF ISSUE

DESIGNED:	CJK
DETAILED:	NGH
CHECKED:	JCH
APPROVED:	AJH
DATE:	JANUARY 24, 2023
PROJECT NO.:	405654

SITE

CIVIL

OVERALL SITE PLAN

C-01-101

8 OF 159

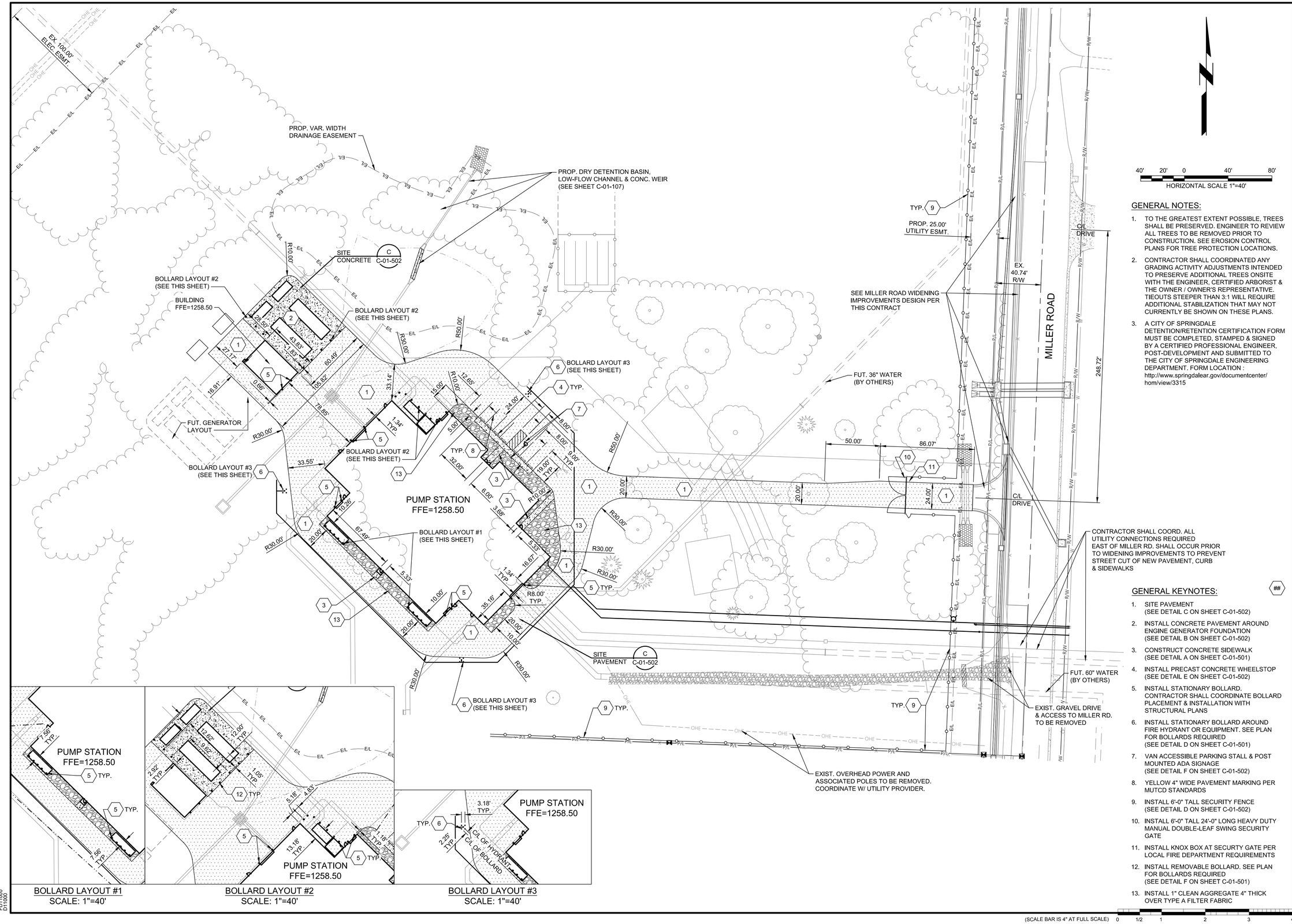

GENERAL NOTES:

1. TO THE GREATEST EXTENT POSSIBLE, TREES SHALL BE PRESERVED. ENGINEER TO REVIEW ALL TREES TO BE REMOVED PRIOR TO CONSTRUCTION. SEE EROSION CONTROL PLANS FOR TREE PROTECTION LOCATIONS.
2. CONTRACTOR SHALL COORDINATED ANY GRADING ACTIVITY ADJUSTMENTS INTENDED TO PRESERVE ADDITIONAL TREES ONSITE WITH THE ENGINEER, CERTIFIED ARBORIST & THE OWNER / OWNER'S REPRESENTATIVE. TIEOUTS STEEPER THAN 3:1 WILL REQUIRE ADDITIONAL STABILIZATION THAT MAY NOT CURRENTLY BE SHOWN ON THESE PLANS.
3. A CITY OF SPRINGDALE DETENTION/RETENTION CERTIFICATION FORM MUST BE COMPLETED, STAMPED & SIGNED BY A CERTIFIED PROFESSIONAL ENGINEER, POST-DEVELOPMENT AND SUBMITTED TO THE CITY OF SPRINGDALE ENGINEERING DEPARTMENT. FORM LOCATION : http://www.springdalear.gov/documentcenter/hom/view/3315

GENERAL KEYNOTES:

1. SITE PAVEMENT (SEE DETAIL C ON SHEET C-01-502)
2. INSTALL CONCRETE PAVEMENT AROUND ENGINE GENERATOR FOUNDATION (SEE DETAIL B ON SHEET C-01-502)
3. CONSTRUCT CONCRETE SIDEWALK (SEE DETAIL A ON SHEET C-01-501)
4. INSTALL PRECAST CONCRETE WHEELSTOP (SEE DETAIL E ON SHEET C-01-502)
5. INSTALL STATIONARY BOLLARD. CONTRACTOR SHALL COORDINATE BOLLARD PLACEMENT & INSTALLATION WITH STRUCTURAL PLANS
6. INSTALL STATIONARY BOLLARD AROUND FIRE HYDRANT OR EQUIPMENT. SEE PLAN FOR BOLLARDS REQUIRED (SEE DETAIL D ON SHEET C-01-501)
7. VAN ACCESSIBLE PARKING STALL & POST MOUNTED ADA SIGNAGE (SEE DETAIL F ON SHEET C-01-502)
8. YELLOW 4" WIDE PAVEMENT MARKING PER MUTCD STANDARDS
9. INSTALL 6'-0" TALL SECURITY FENCE (SEE DETAIL D ON SHEET C-01-502)
10. INSTALL 6'-0" TALL 24'-0" LONG HEAVY DUTY MANUAL DOUBLE-LEAF SWING SECURITY GATE
11. INSTALL KNOX BOX AT SECURTY GATE PER LOCAL FIRE DEPARTMENT REQUIREMENTS
12. INSTALL REMOVABLE BOLLARD. SEE PLAN FOR BOLLARDS REQUIRED (SEE DETAIL F ON SHEET C-01-501)
13. INSTALL 1" CLEAN AGGREGATE 4" THICK OVER TYPE A FILTER FABRIC

BOLLARD LAYOUT #1
SCALE: 1"=40'

BOLLARD LAYOUT #2
SCALE: 1"=40'

BOLLARD LAYOUT #3
SCALE: 1"=40'

(SCALE BAR IS 4" AT FULL SCALE) 0 1/2 1 2 3 4

PLOTTED: 1/23/2023 4:26:15 PM
FILE: C:\PW_WORKING\BVW_AMERICAS\D1129176\C-01-102.DWG
FD11000
FD11004

Black & Veatch Corporation
Kansas City, Missouri

olsson

THIS DOCUMENT WAS ORIGINALLY ISSUED AND SEALED ON JANUARY 24, 2023 BY MATTHEW K. LOOS, A LICENSED PROFESSIONAL ENGINEER IN THE STATE OF ARKANSAS, E-19979

BEAVER WATER DISTRICT

WESTERN CORRIDOR PUMP STATION

100% SET

REVISIONS AND RECORD OF ISSUE

DESIGNED:	RAC
DETAILED:	MVC
CHECKED:	RAC
APPROVED:	MKL
DATE:	JANUARY 24, 2023
PROJECT NO.:	405654

SITE

CIVIL

ENLARGED SITE PLAN

C-01-102

9 OF 159

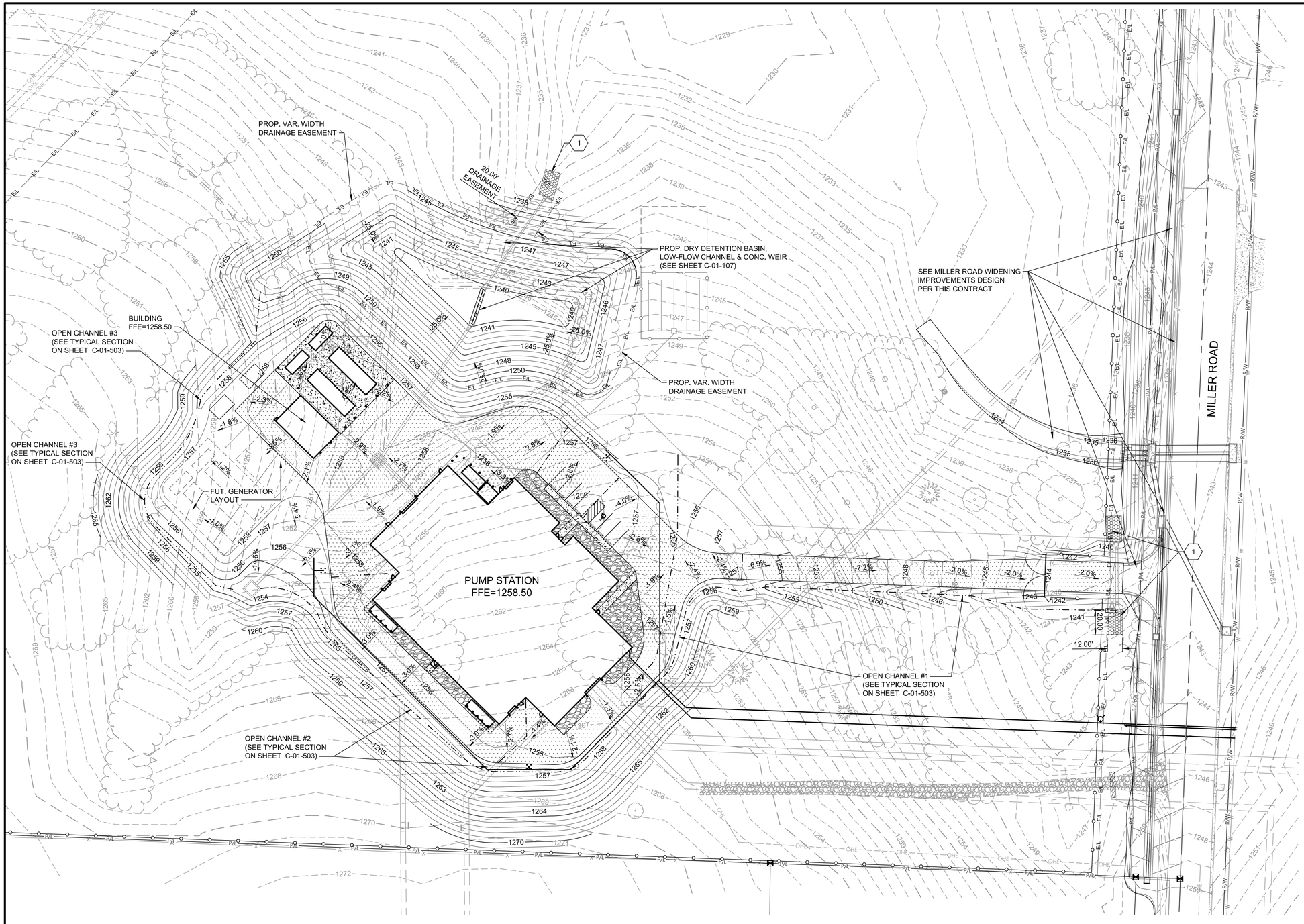

40' 20' 0 40' 80'

HORIZONTAL SCALE 1"=40'

GENERAL NOTES:

1. TO THE GREATEST EXTENT POSSIBLE, TREES SHALL BE PRESERVED. ENGINEER TO REVIEW ALL TREES TO BE REMOVED PRIOR TO CONSTRUCTION. SEE EROSION CONTROL PLANS FOR TREE PROTECTION LOCATIONS.
2. CONTRACTOR SHALL COORDINATE ANY GRADING ACTIVITY ADJUSTMENTS INTENDED TO PRESERVE ADDITIONAL TREES ONSITE WITH THE ENGINEER, CERTIFIED ARBORIST & THE OWNER / OWNER'S REPRESENTATIVE. TIEOUTS STEEPER THAN 3:1 WILL REQUIRE ADDITIONAL STABILIZATION THAT MAY NOT CURRENTLY BE SHOWN ON THESE PLANS.
3. CONTRACTOR SHALL FINISH GRADE SLOPES AS SHOWN NO STEEPER THAN 1 FOOT VERTICAL IN 4 FEET HORIZONTAL UNLESS NOTED OTHERWISE ON PLANS.
4. SEE SHEET C-01-104 FOR ENLARGED GRADING & PAVING PLAN FOR DETAILED SPOT ELEVATIONS WITH NORTHING / EASTING LOCATIONS.

GENERAL KEYNOTES:

1. INSTALL RIPRAP APPRON WITH D50=12" ROCK (SEE DETAIL A ON SHEET C-01-503)

(SCALE BAR IS 4" AT FULL SCALE) 0 1/2 1 2 3 4

BLACK & VEATCH

Black & Veatch Corporation
Kansas City, Missouri

olsson

THIS DOCUMENT WAS ORIGINALLY ISSUED AND SEALED ON JANUARY 24, 2023 BY MATTHEW K. LOOS, A LICENSED PROFESSIONAL ENGINEER IN THE STATE OF ARKANSAS, E-19979

BEAVER WATER DISTRICT

WESTERN CORRIDOR PUMP STATION

100% SET

REVISIONS AND RECORD OF ISSUE

DESIGNED:	RAC
DETAILED:	MVC
CHECKED:	RAC
APPROVED:	MKL
DATE:	JANUARY 24, 2023
PROJECT NO.:	405654

SITE

CIVIL

GRADING PLAN

C-01-103

PLOTTED: 1/23/2023 4:24:59 PM
FILE: C:\PW_WORKING\BVW_AMERICAS\D1129176\C-01-103.DWG
FS1:1000
FS1:1000

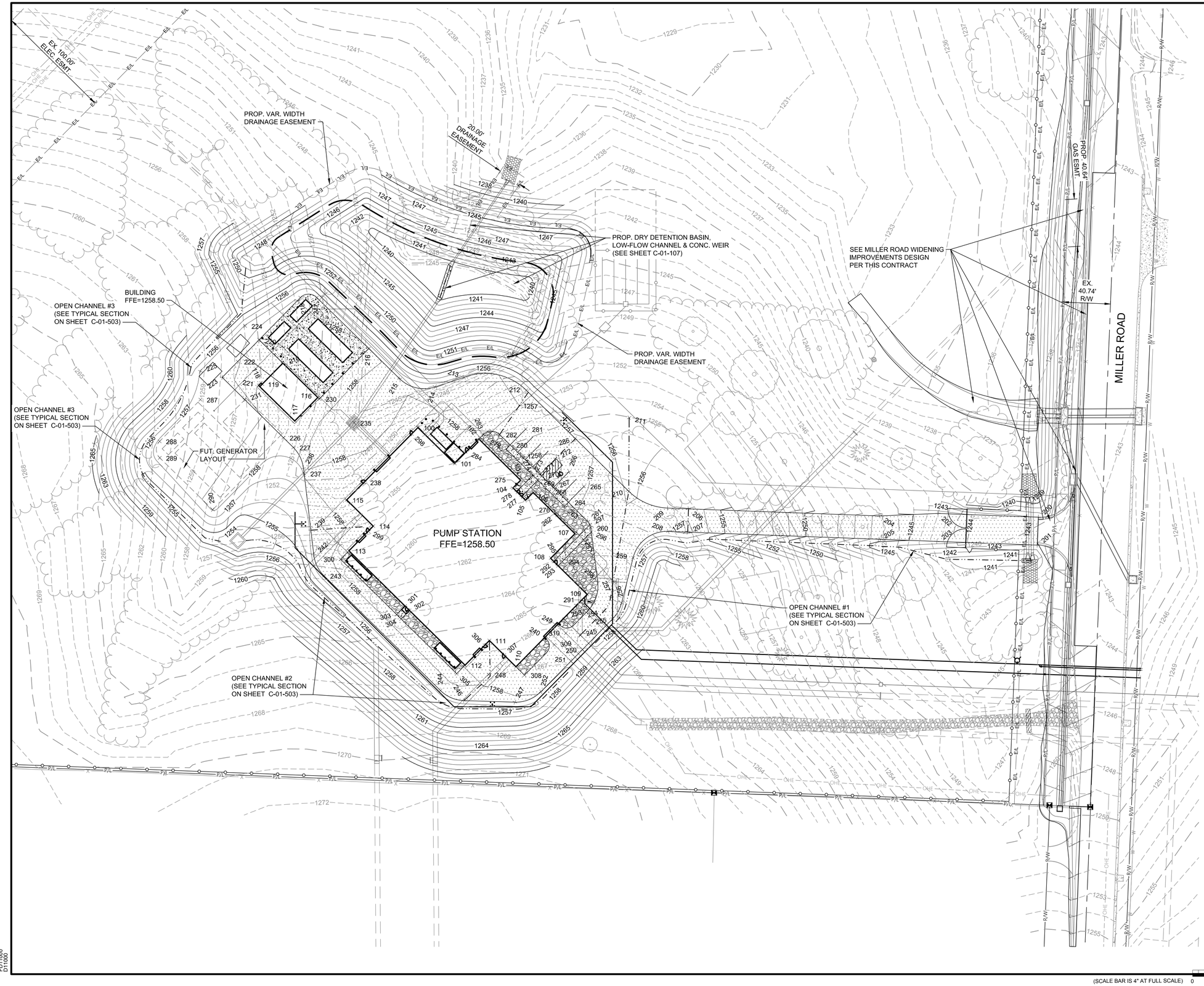

40' 20' 0 40' 80'

HORIZONTAL SCALE 1"=40'

GENERAL NOTES:

1. TO THE GREATEST EXTENT POSSIBLE, TREES SHALL BE PRESERVED. ENGINEER TO REVIEW ALL TREES TO BE REMOVED PRIOR TO CONSTRUCTION. SEE EROSION CONTROL PLANS FOR TREE PROTECTION LOCATIONS.
2. CONTRACTOR SHALL COORDINATED ANY GRADING ACTIVITY ADJUSTMENTS INTENDED TO PRESERVE ADDITIONAL TREES ONSITE WITH THE ENGINEER, CERTIFIED ARBORIST & THE OWNER / OWNER'S REPRESENTATIVE. TIEOUTS STEEPER THAN 3:1 WILL REQUIRE ADDITIONAL STABILIZATION THAT MAY NOT CURRENTLY BE SHOWN ON THESE PLANS.
3. CONTRACTOR SHALL FINISH GRADE SLOPES AS SHOWN NO STEEPER THAN 1 FOOT VERTICAL IN 4 FEET HORIZONTAL UNLESS NOTED OTHERWISE ON PLANS.
4. SEE SHEET C-01-601 FOR COORDINATE TABLES WITH SPOT ELEVATIONS, DESCRIPTIONS & NORTHING / EASTING LOCATIONS

BLACK & VEATCH

Black & Veatch Corporation
Kansas City, Missouri

olsson

THIS DOCUMENT WAS ORIGINALLY ISSUED AND SEALED ON JANUARY 24, 2023 BY MATTHEW K. LOOS, A LICENSED PROFESSIONAL ENGINEER IN THE STATE OF ARKANSAS, E-19979

BEAVER WATER DISTRICT

WESTERN CORRIDOR PUMP STATION

100% SET

REVISIONS AND RECORD OF ISSUE

DESIGNED:	RAC
DETAILED:	MVC
CHECKED:	RAC
APPROVED:	MKL
DATE:	JANUARY 24, 2023
PROJECT NO.:	405654

SITE

CIVIL

ENLARGED GRADING AND PAVING PLAN

C-01-104

11 OF 159

(SCALE BAR IS 4" AT FULL SCALE) 0 1/2 1 2 3 4

PLOTTED: 1/23/2023 4:24:02 PM
FILE: C:\PW_WORKING\BVW_AMERICAS\D1129176\C-01-104.DWG
FD11000
D1104

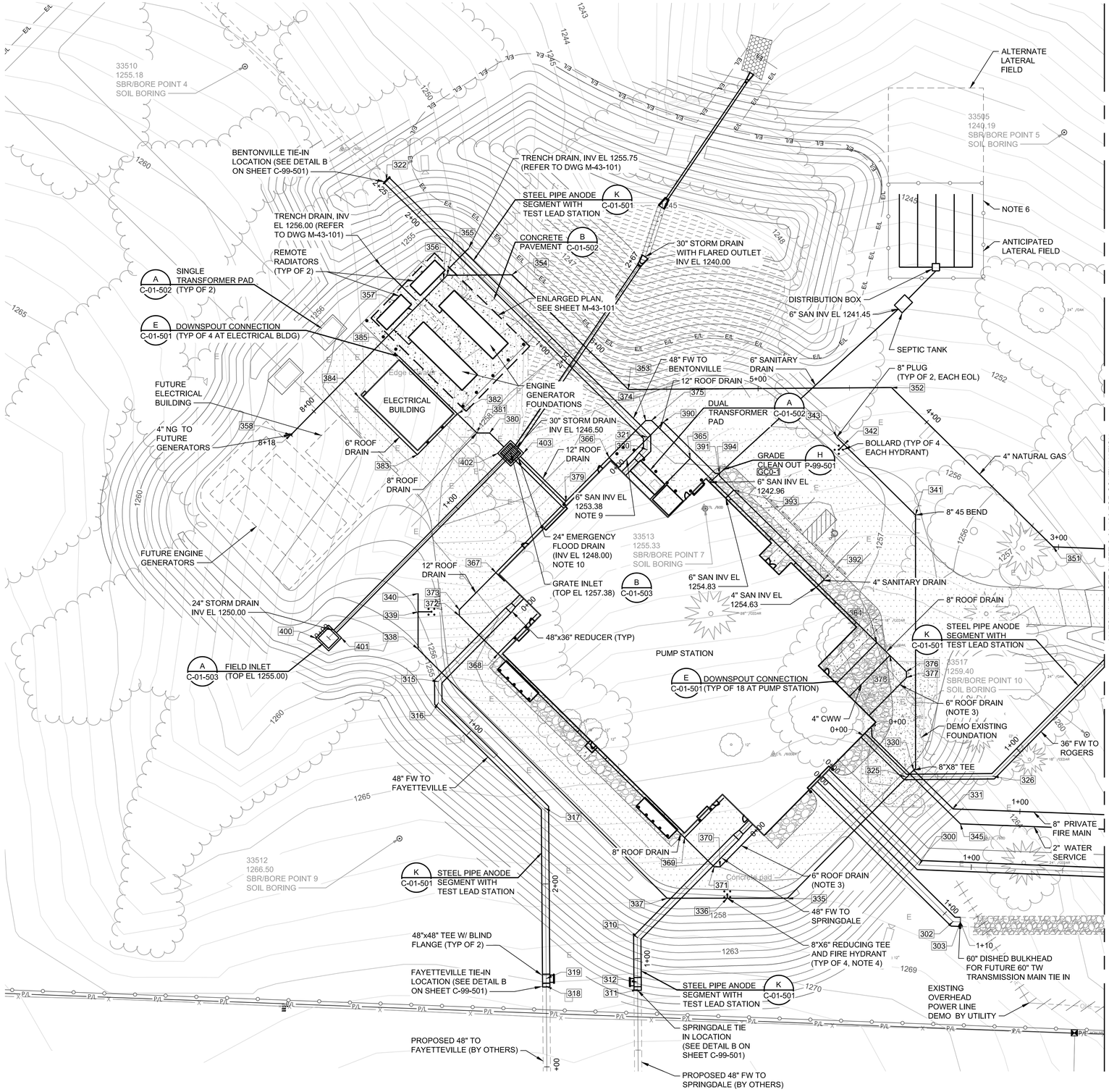

30' 15' 0 30' 60'

HORIZONTAL SCALE 1"=30'

GENERAL NOTES:

1. TO THE GREATEST EXTENT POSSIBLE, TREES SHALL BE PRESERVED. ENGINEER TO REVIEW ALL TREES TO BE REMOVED PRIOR TO CONSTRUCTION.
2. PROPOSED EASEMENT LINES NOT SHOWN FOR CLARITY.
3. COORDINATE EXACT LOCATION OF BURIED ROOF DRAIN PIPING WITH DOWNSPOUT LOCATIONS. PROVIDE A CLEANOUT AT EACH BEGINNING OF LINE FOR THE ROOF DRAINS. CLEANOUT SHALL BE BROUGHT TO GRADE WITH 45 DEG BENDS AND A THREADED PLUG. CLEANOUT SHALL BE CAST FLUSH IN THE SIDEWALK AND DRIVEWAY.
4. CONTRACTOR SHALL PROVIDE 4EA FIRE HYDRANTS ASSEMBLIES INCLUDING HYDRANTS, GATE VALVES, FITTINGS, AND BOLLARDS PER SWU STANDARD DETAIL S-2.
5. ALL BURIED HARNESSED MECHANICAL COUPLINGS SHALL BE BONDED ACROSS THE JOINT AS SHOWN ON DETAIL L, SHEET C-01-501.
6. CONTRACTOR SHALL INSTALL TEMPORARY FENCING AROUND ANTICIPATED LATERAL FIELD PRIOR TO STARTING CONSTRUCTION TO PREVENT DISTURBANCE OF IN SITU SOILS.
7. THE 48" FW TO SPRINGDALE OUTSIDE OF BWD PROPERTY LINES WILL BE COMPLETED BY OTHERS. CONTRACTOR TO COORDINATE PRECISE TIE IN LOCATION WITH OTHER WORK. TIE IN LOCATION MUST BE PROTECTED UNTIL CONNECTION IS COMPLETE.
8. THE FW LINES FOR BENTONVILLE, AND ROGERS SHALL BE TERMINATED WITH DISHED BULKHEADS UNTIL THEIR TRANSMISSION MAIN CONNECTION IN SUBSEQUENT PHASES BY OTHERS. DISHED BULKHEADS LOCATIONS SHALL BE CLEARLY MARKED WITH 6FT BLUE FRP LINE MARKERS.
9. SANITARY PIPE TO BE CONCRETE ENCASED WHEN ALIGNMENT IS WITHIN 10-FT OF THE FINISHED WATER PIPELINE. PIPE SHALL BE ENCASED FOR A DISTANCE OF 10-FT OF A CROSSING. REFER TO DETAIL A ON SHEET M-42-501.
10. REFER TO DETAIL C ON SHEET C-99-501 FOR THE FLAP GATE DETAIL TO BE INSTALLED ON THE 24" EMERGENCY FLOOD DRAIN LINE EFFLUENT.

(SCALE BAR IS 4" AT FULL SCALE) 0 1/2 1 2 3 4

BLACK & VEATCH
Black & Veatch Corporation
Kansas City, Missouri

olsson

THIS DOCUMENT WAS ORIGINALLY ISSUED AND SEALED ON JANUARY 24, 2023 BY ANDREW J. HANSEN, A LICENSED PROFESSIONAL ENGINEER IN THE STATE OF ARKANSAS, E-14664

BEAVER WATER DISTRICT

WESTERN CORRIDOR PUMP STATION

100% SET

REVISIONS AND RECORD OF ISSUE

DESIGNED:	CJK
DETAILED:	NGH
CHECKED:	JCH
APPROVED:	AJH
DATE:	JANUARY 24, 2023
PROJECT NO.:	405654

SITE

CIVIL

ENLARGED UTILITY PLAN (1 OF 2)

C-01-105

12 OF 159

PLOTTED: 1/23/2023 10:16:25 AM
FILE: C:\PW_WORKING\BVW_AMERICAS\D1129176\C-01-105.DWG
ED11000
PD11003

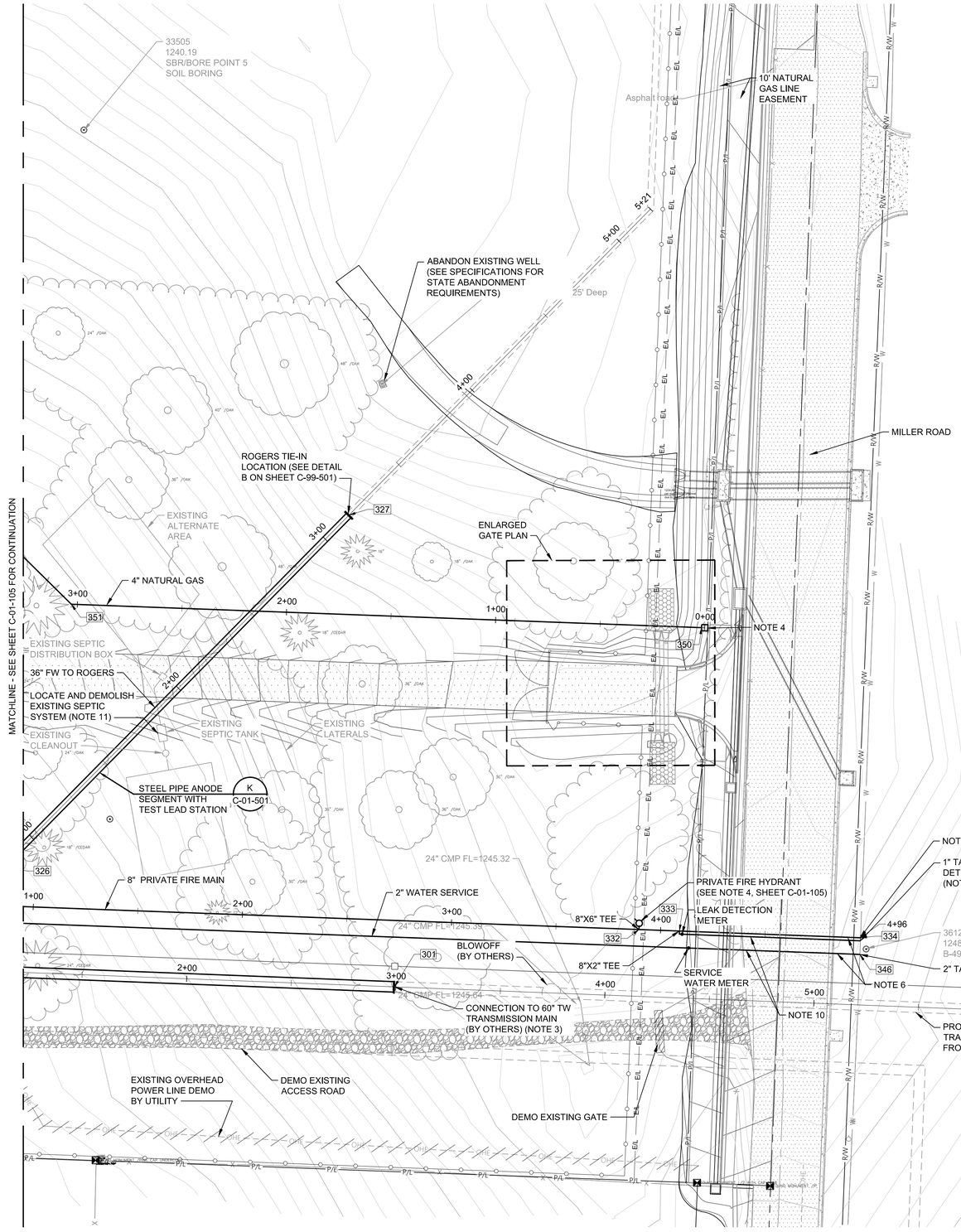

GENERAL NOTES:

1. TO THE GREATEST EXTENT POSSIBLE, TREES SHALL BE PRESERVED. ENGINEER TO REVIEW ALL TREES TO BE REMOVED PRIOR TO CONSTRUCTION.
2. PROPOSED EASEMENT LINES NOT SHOWN FOR CLARITY.
3. CONNECTION TO 60" TRANSMISSION MAIN TO BE COORDINATED WITH TRANSMISSION PIPELINE PROJECT CONTRACTOR. PIPELINE CONTRACTOR WILL PROVIDE DOUBLE BUTTSTRAP CONNECTION WITH 10' PUP PIPE PIECE AFTER DISINFECTION AND PRESSURE TESTING.
4. CONTRACTOR SHALL PROVIDE 3' X 3' X 8" THICK CONCRETE PAD FOR GAS UTILITY METER INSTALLATION. COORDINATE EXACT LOCATION OF METER PAD WITH GAS UTILITY.
5. CONTRACTOR SHALL PROVIDE TAPPING SADDLE AND 8" GATE VALVE ON EXISTING 12" WATER LINE. TAPPING SADDLE AND VALVE INSTALLATION SHALL BE IN ACCORDANCE WITH SPRINGDALE WATER UTILITY (SWU) STANDARD DETAIL S-5 AND S-36.
6. CONTRACTOR SHALL COORDINATE WATER LINE CROSSING OF MILLER ROAD WITH PIPELINE CONTRACTOR TO UTILIZE THE SAME TRENCH TO LIMIT DISTURBANCE OF THE EXISTING ROADWAY. WATER LINE CROSSING SHOULD FOLLOW SWU REQUIREMENTS.
7. ALL BURIED HARNESSED MECHANICAL COUPLINGS SHALL BE BONDED ACROSS THE JOINT AS SHOWN ON DETAIL L M, SHEET C-01-501.
8. NOT ALL UTILITIES ARE SHOWN. REFER TO THE WEST MILLER ROAD IMPROVEMENTS FOR ADDITIONAL UTILITY COVERAGE ALONG THE MILLER ROAD CORRIDOR.
9. CONTRACTOR TO PROVIDE 1" TAP FROM EXISTING 12" MAIN TO NEW PRIVATE 8" FIRE SYSTEM MAIN PER SPRINGDALE WATER UTILITY STANDARD DETAIL S-36 AND STANDARD SPECIFICATIONS.
10. SERVICE WATER LINE AND LEAK DETECTION WATER LINE SHALL BE CONSTRUCTED IN ACCORDANCE WITH SWU STANDARD SPECIFICATIONS, INCLUDING CASING SERVICE LINES UNDER ROADWAYS FROM BACK OF SIDEWALK ON THE MAIN SIDE TO BACK OF SIDEWALK ON THE METER SIDE.
11. APPROXIMATE LOCATION OF SEPTIC TANK IS SHOWN. CONTRACTOR TO CONFIRM LOCATION AND DEMOLISH. THE EXISTING SEPTIC SYSTEM DESIGN PARAMETERS ARE AS LISTED:
    - SEPTIC TANK SIZE: 1,000 GALLONS
    - NUMBER OF FIELD LINES: 4
    - LENGTH OF EACH FIELD LINE: 79-FT

30' 15' 0 30' 60'
HORIZONTAL SCALE 1"=30'

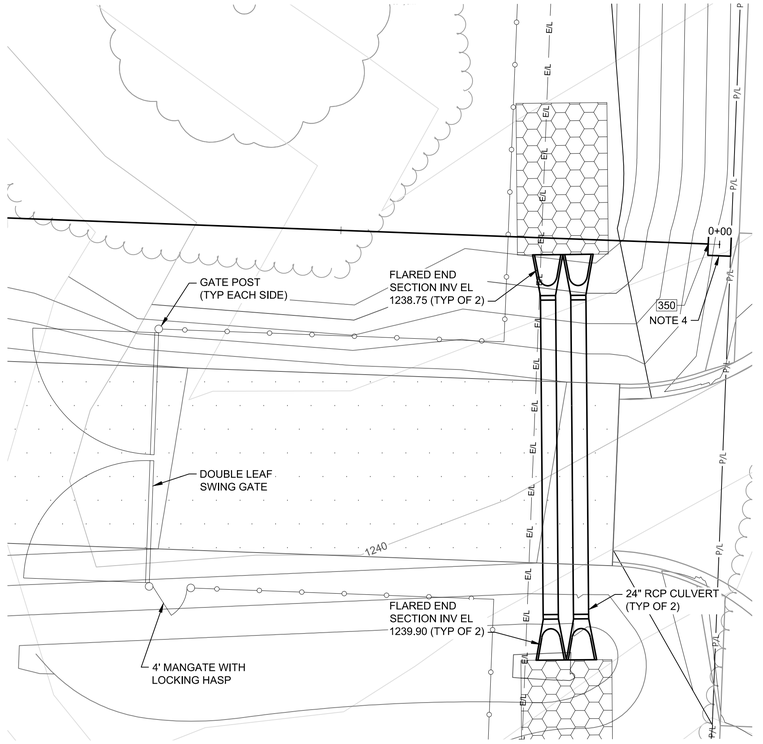

ENLARGED GATE PLAN
1"=10'

(SCALE BAR IS 4" AT FULL SCALE) 0 1/2 1 2 3 4

PLOTTED: 1/23/2023 10:19:05 AM
FILE: C:\PW_WORKING\BVW_AMERICAS\D1129176\C-01-106.DWG
FDT1000
FDT1000

Black & Veatch Corporation
Kansas City, Missouri

olsson

THIS DOCUMENT WAS ORIGINALLY ISSUED AND SEALED ON JANUARY 24, 2023 BY ANDREW J. HANSEN, A LICENSED PROFESSIONAL ENGINEER IN THE STATE OF ARKANSAS, E-14664

BEAVER WATER DISTRICT

WESTERN CORRIDOR PUMP STATION

100% SET

REVISIONS AND RECORD OF ISSUE

DESIGNED:	CJK
DETAILED:	NGH
CHECKED:	JCH
APPROVED:	AJH
DATE:	JANUARY 24, 2023
PROJECT NO.:	405654

SITE

CIVIL

ENLARGED UTILITY PLAN (2 OF 2)

C-01-106

13 OF 159

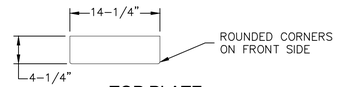

TOP PLATE

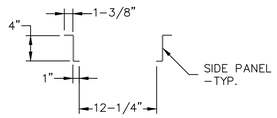

SIDE PANEL LAYOUT

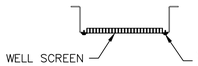

SECTION A-A

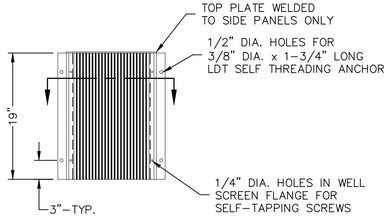

FRONT

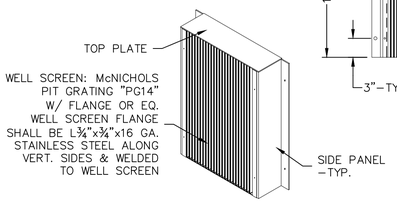

ISOMETRIC

* WELL SCREEN DETAILS

NOT TO SCALE

* CONTRACTOR SHALL NOT INSTALL WELL SCREEN UNTIL DISTURBED AREAS ARE FULLY VEGETATED AND ALL ONSITE STORM SYSTEMS HAVE BEEN CLEARED OF MUD OR DEBRIS

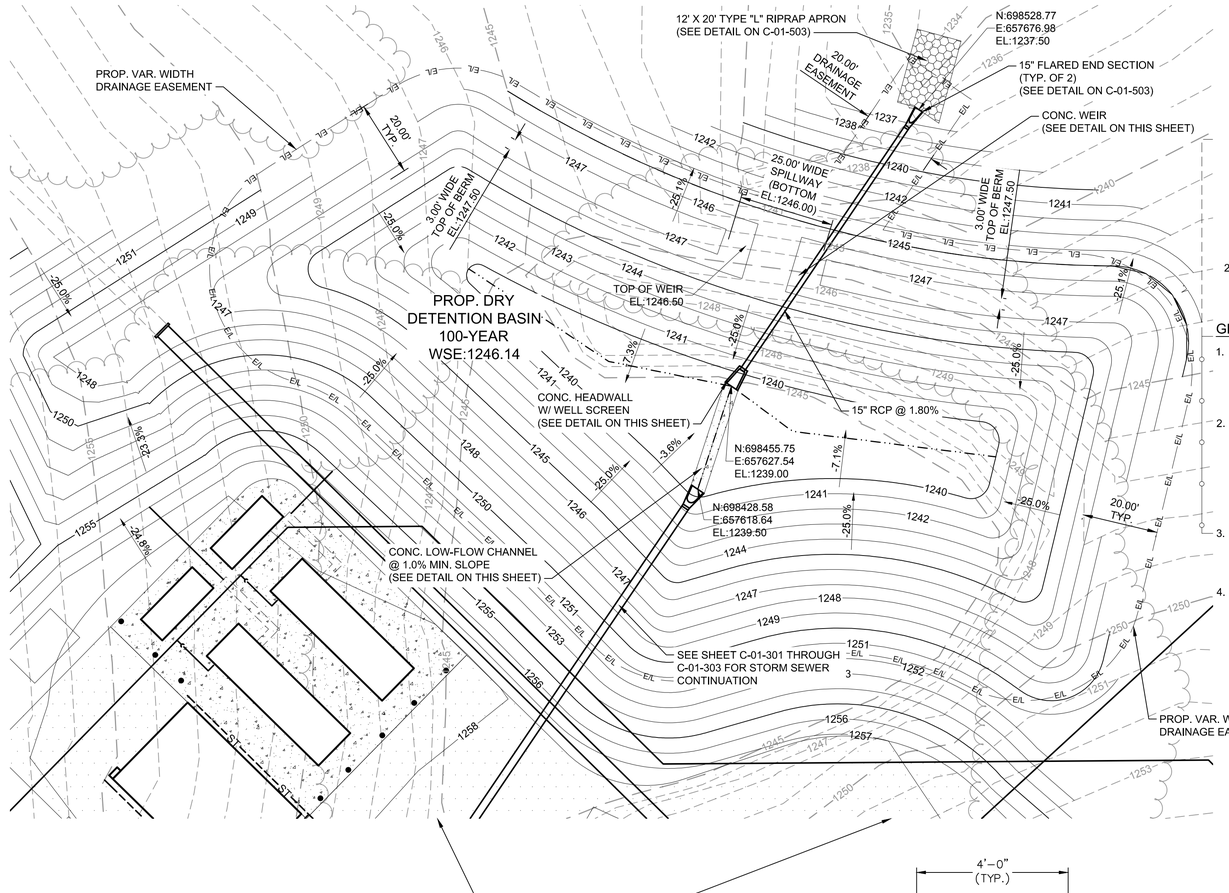

GENERAL NOTES:

1. TO THE GREATEST EXTENT POSSIBLE, TREES SHALL BE PRESERVED. ENGINEER TO REVIEW ALL TREES TO BE REMOVED PRIOR TO CONSTRUCTION. SEE EROSION CONTROL PLANS FOR TREE PROTECTION LOCATIONS.
2. CONTRACTOR SHALL COORDINATE ANY GRADING ACTIVITY ADJUSTMENTS INTENDED TO PRESERVE ADDITIONAL TREES ONSITE WITH THE ENGINEER, CERTIFIED ARBORIST & THE OWNER / OWNER'S REPRESENTATIVE. TIEOUTS STEEPER THAN 3:1 WILL REQUIRE ADDITIONAL STABILIZATION THAT MAY NOT CURRENTLY BE SHOWN ON THESE PLANS.
3. CONTRACTOR SHALL FINISH GRADE SLOPES AS SHOWN NO STEEPER THAN 1 FOOT VERTICAL IN 4 FEET HORIZONTAL UNLESS NOTED OTHERWISE ON PLANS.
4. A CITY OF SPRINGDALE DETENTION/RETENTION CERTIFICATION FORM MUST BE COMPLETED, STAMPED & SIGNED BY A CERTIFIED PROFESSIONAL ENGINEER, POST-DEVELOPMENT AND SUBMITTED TO THE CITY OF SPRINGDALE ENGINEERING DEPARTMENT. FORM LOCATION : http://www.springdalear.gov/documentcenter/hom/view/3315

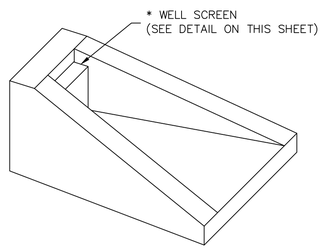

ISOMETRIC DETAIL

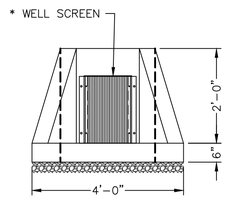

FRONT

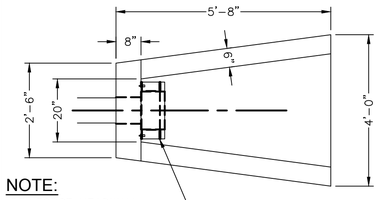

PLAN

NOTE:
REINFORCE HEADWALL W/ #4@12" O.C. E.W. THROUGHOUT, CENTER REINFORCING IN WALLS & SLAB

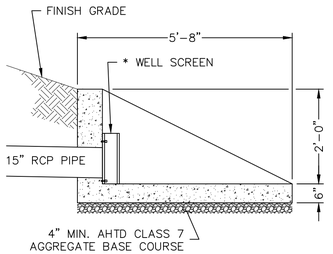

SECTION

CONC. HEADWALL DETAILS
NOT TO SCALE

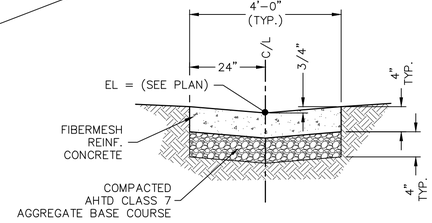

CONCRETE LOW-FLOW CHANNEL - TYPICAL SECTION
NOT TO SCALE

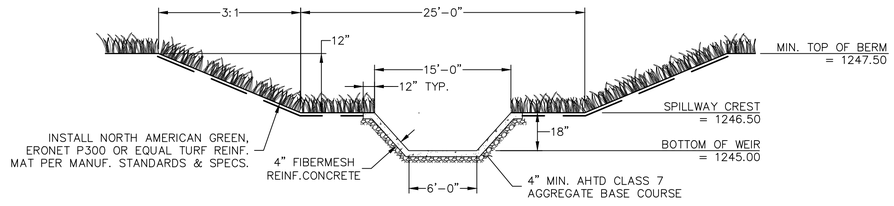

CONCRETE WEIR & EMERGENCY SPILLWAY - TYPICAL SECTION
NOT TO SCALE

(SCALE BAR IS 4" AT FULL SCALE) 0 1/2 1 2 3 4

PLOTTED: 1/23/2023 4:23:08 PM
C:\PW_WORKING\BVW_AMERICAS\D1129176\C-01-107.DWG
FILE: FDT1000
D1000

BLACK & VEATCH
Black & Veatch Corporation
Kansas City, Missouri

olsson

THIS DOCUMENT WAS ORIGINALLY ISSUED AND SEALED ON JANUARY 24, 2023 BY MATTHEW K. LOOS, A LICENSED PROFESSIONAL ENGINEER IN THE STATE OF ARKANSAS, E-19979

BEAVER WATER DISTRICT

WESTERN CORRIDOR PUMP STATION

100% SET

REVISIONS AND RECORD OF ISSUE

DESIGNED:	RAC
DETAILED:	MVC
CHECKED:	RAC
APPROVED:	MKL
DATE:	JANUARY 24, 2023
PROJECT NO.:	405654

SITE

CIVIL

DETENTION BASIN ENLARGED PLAN

C-01-107

14 OF 159

LEGEND

- LIMITS OF DISTURBANCE
- INSTALL SEDIMENT BARRIER
- TREE(S) TO BE PROTECTED (SEE NOTE #17 & DETAIL ON SHEET C-00-003)
- TREE(S) TO BE REMOVED
- INSTALL INLET SEDIMENT TRAP
- INSTALL ROCK DITCH CHECK
- INSTALL GRAVEL CONSTRUCTION ENTRANCE/EXIT
- INSTALL CONCRETE WASHOUT
- STORM OUTFALL

GENERAL KEYNOTES:

##

1. INSTALL SEDIMENT BARRIER (SEE DETAIL C ON SHEET C-01-504)
2. INSTALL INLET SEDIMENT TRAP (SEE DETAIL D ON SHEET C-01-504)
3. EXISTING TREE(S) TO BE PRESERVED (SEE DETAIL A ON SHEET C-00-003 FOR ACTUAL LIMITS OF TREE PROTECTION BASED ON TREE CANOPY)
4. EXISTING TREE(S) TO BE REMOVED
5. INSTALL ROCK DITCH CHECK (SEE DETAIL F ON SHEET C-01-504)
6. APPROX. LOCATION OF CONC. WASHOUT (SEE DETAIL B ON SHEET C-01-504)
7. INSTALL CONSTRUCTION ENTRANCE/EXIT (SEE DETAIL A ON SHEET C-01-504)

LAND DISTURBANCE:

TOTAL SITE AREA (LOT 1) = 36.109± AC.

TOTAL AREA DISTURBED (LOT 1 & MILLER ROAD IMPROVEMENTS) = 6.258± AC.

(SCALE BAR IS 4" AT FULL SCALE) 0 1/2 1 2 3 4

BLACK & VEATCH

Black & Veatch Corporation
Kansas City, Missouri

olsson

THIS DOCUMENT WAS ORIGINALLY ISSUED AND SEALED ON JANUARY 24, 2023 BY MATTHEW K. LOOS, A LICENSED PROFESSIONAL ENGINEER IN THE STATE OF ARKANSAS, E-19979

BEAVER WATER DISTRICT

WESTERN CORRIDOR PUMP STATION

100% SET

REVISIONS AND RECORD OF ISSUE

DESIGNED:	RAC
DETAILED:	MVC
CHECKED:	RAC
APPROVED:	MKL
DATE: JANUARY 24, 2023	
PROJECT NO.:	405654

SITE

CIVIL

EROSION CONTROL PLAN SOUTH - PHASE 1

C-01-108

PLOTTED: 1/23/2023 4:22:24 PM
FILE: C:\PW_WORKING\BVW_AMERICAS\D1129176\C-01-108.DWG
FD11000
D11000

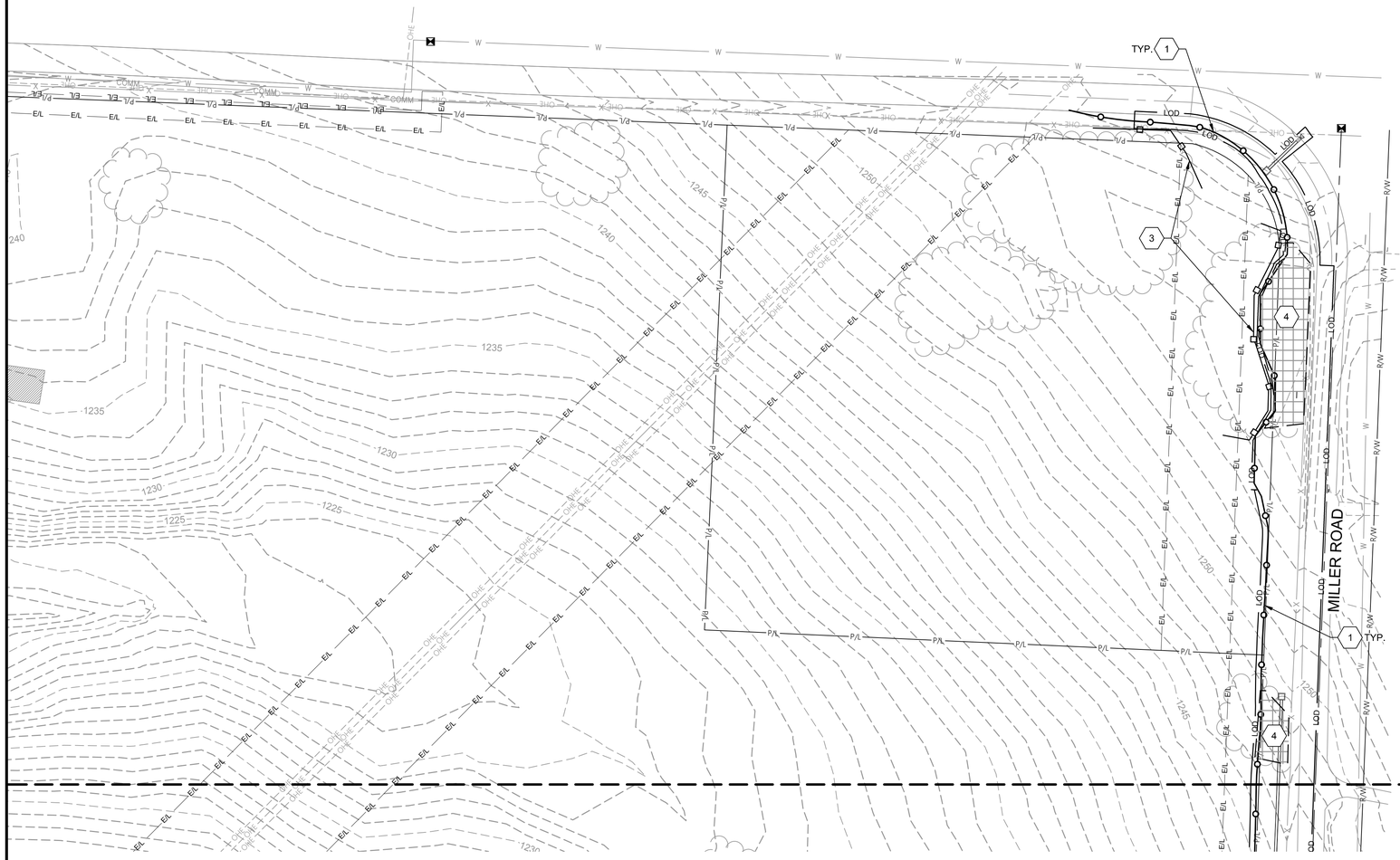

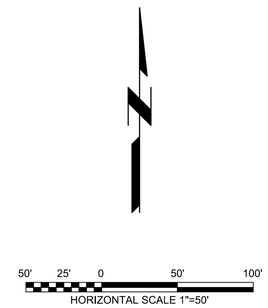

LEGEND

- LOD — LIMITS OF DISTURBANCE
- INSTALL SEDIMENT BARRIER
- TREE(S) TO BE PROTECTED (SEE NOTE #17 & DETAIL ON SHEET C-00-003)
- TREE(S) TO BE REMOVED
- INSTALL INLET SEDIMENT TRAP
- INSTALL ROCK DITCH CHECK
- INSTALL GRAVEL CONSTRUCTION ENTRANCE/EXIT
- INSTALL CONCRETE WASHOUT
- 1 STORM OUTFALL

GENERAL KEYNOTES:

##

1. INSTALL SEDIMENT BARRIER (SEE DETAIL C ON SHEET C-01-504)
2. INSTALL INLET SEDIMENT TRAP (SEE DETAIL D ON SHEET C-01-504)
3. EXISTING TREE(S) TO BE PRESERVED (SEE DETAIL A ON SHEET C-00-003 FOR ACTUAL LIMITS OF TREE PROTECTION BASED ON TREE CANOPY)
4. EXISTING TREE(S) TO BE REMOVED
5. INSTALL ROCK DITCH CHECK (SEE DETAIL F ON SHEET C-01-504)
6. APPROX. LOCATION OF CONC. WASHOUT (SEE DETAIL B ON SHEET C-01-504)
7. INSTALL CONSTRUCTION ENTRANCE/EXIT (SEE DETAIL A ON SHEET C-01-504)

LAND DISTURBANCE:

TOTAL SITE AREA (LOT 1) = 36.109± AC.

TOTAL AREA DISTURBED (LOT 1 & MILLER ROAD IMPROVEMENTS) = 6.258± AC.

(SCALE BAR IS 4" AT FULL SCALE) 0 1/2 1 2 3 4

BLACK & VEATCH

Black & Veatch Corporation
Kansas City, Missouri

olsson

THIS DOCUMENT WAS ORIGINALLY ISSUED AND SEALED ON JANUARY 24, 2023 BY MATTHEW K. LOOS, A LICENSED PROFESSIONAL ENGINEER IN THE STATE OF ARKANSAS, E-19979

BEAVER WATER DISTRICT

WESTERN CORRIDOR PUMP STATION

100% SET

REVISIONS AND RECORD OF ISSUE

DESIGNED:	RAC
DETAILED:	MVC
CHECKED:	RAC
APPROVED:	MKL
DATE: JANUARY 24, 2023	
PROJECT NO.:	405654

SITE

CIVIL

EROSION CONTROL PLAN NORTH - PHASE 1

C-01-109

PLOTTED: 1/23/2023 4:16:35 PM
FILE: C:\PW_WORKING\BVW_AMERICAS\D1129176\C-01-109.DWG
FD11000
D11000

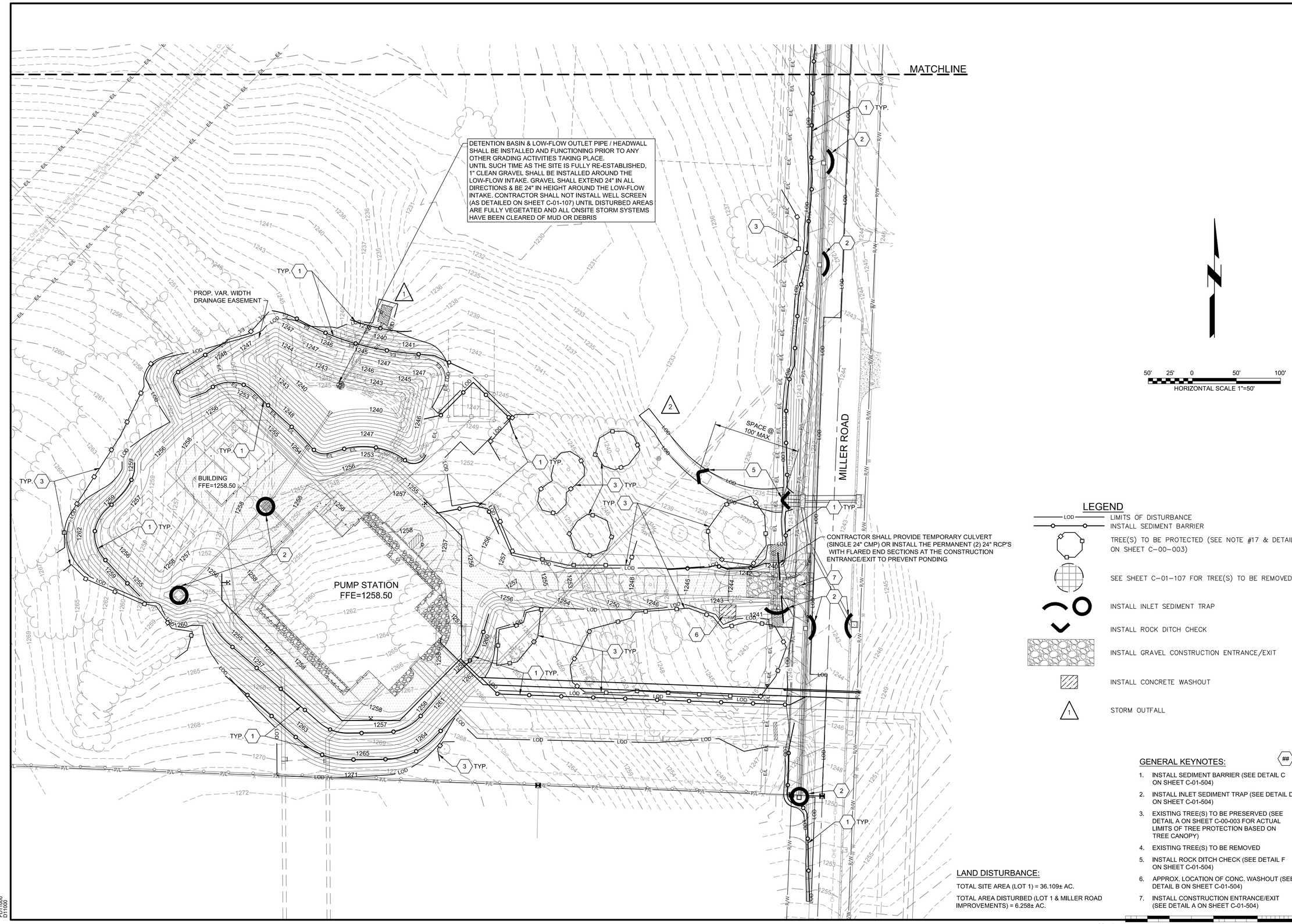

50' 25' 0 50' 100'
HORIZONTAL SCALE 1"=50'

LEGEND

- LOD — LIMITS OF DISTURBANCE
- INSTALL SEDIMENT BARRIER
- TREE(S) TO BE PROTECTED (SEE NOTE #17 & DETAIL ON SHEET C-00-003)
- SEE SHEET C-01-107 FOR TREE(S) TO BE REMOVED
- INSTALL INLET SEDIMENT TRAP
- INSTALL ROCK DITCH CHECK
- INSTALL GRAVEL CONSTRUCTION ENTRANCE/EXIT
- INSTALL CONCRETE WASHOUT
- 1 STORM OUTFALL

GENERAL KEYNOTES:

##

1. INSTALL SEDIMENT BARRIER (SEE DETAIL C ON SHEET C-01-504)
2. INSTALL INLET SEDIMENT TRAP (SEE DETAIL D ON SHEET C-01-504)
3. EXISTING TREE(S) TO BE PRESERVED (SEE DETAIL A ON SHEET C-00-003 FOR ACTUAL LIMITS OF TREE PROTECTION BASED ON TREE CANOPY)
4. EXISTING TREE(S) TO BE REMOVED
5. INSTALL ROCK DITCH CHECK (SEE DETAIL F ON SHEET C-01-504)
6. APPROX. LOCATION OF CONC. WASHOUT (SEE DETAIL B ON SHEET C-01-504)
7. INSTALL CONSTRUCTION ENTRANCE/EXIT (SEE DETAIL A ON SHEET C-01-504)

LAND DISTURBANCE:

TOTAL SITE AREA (LOT 1) = 36.109± AC.

TOTAL AREA DISTURBED (LOT 1 & MILLER ROAD IMPROVEMENTS) = 6.258± AC.

(SCALE BAR IS 4" AT FULL SCALE) 0 1/2 1 2 3 4

BLACK & VEATCH

Black & Veatch Corporation
Kansas City, Missouri

olsson

THIS DOCUMENT WAS ORIGINALLY ISSUED AND SEALED ON JANUARY 24, 2023 BY MATTHEW K. LOOS, A LICENSED PROFESSIONAL ENGINEER IN THE STATE OF ARKANSAS, E-19979

BEAVER WATER DISTRICT

WESTERN CORRIDOR PUMP STATION

100% SET

REVISIONS AND RECORD OF ISSUE

DESIGNED:	RAC
DETAILED:	MVC
CHECKED:	RAC
APPROVED:	MKL
DATE: JANUARY 24, 2023	
PROJECT NO.:	405654

SITE

CIVIL

EROSION CONTROL PLAN SOUTH - PHASE 2

C-01-110

17 OF 159

PLOTTED: 1/23/2023 4:35:52 PM
FILE: C:\PW_WORKING\BVW_AMERICAS\D1129176\C-01-110.DWG
FD11000
D11000

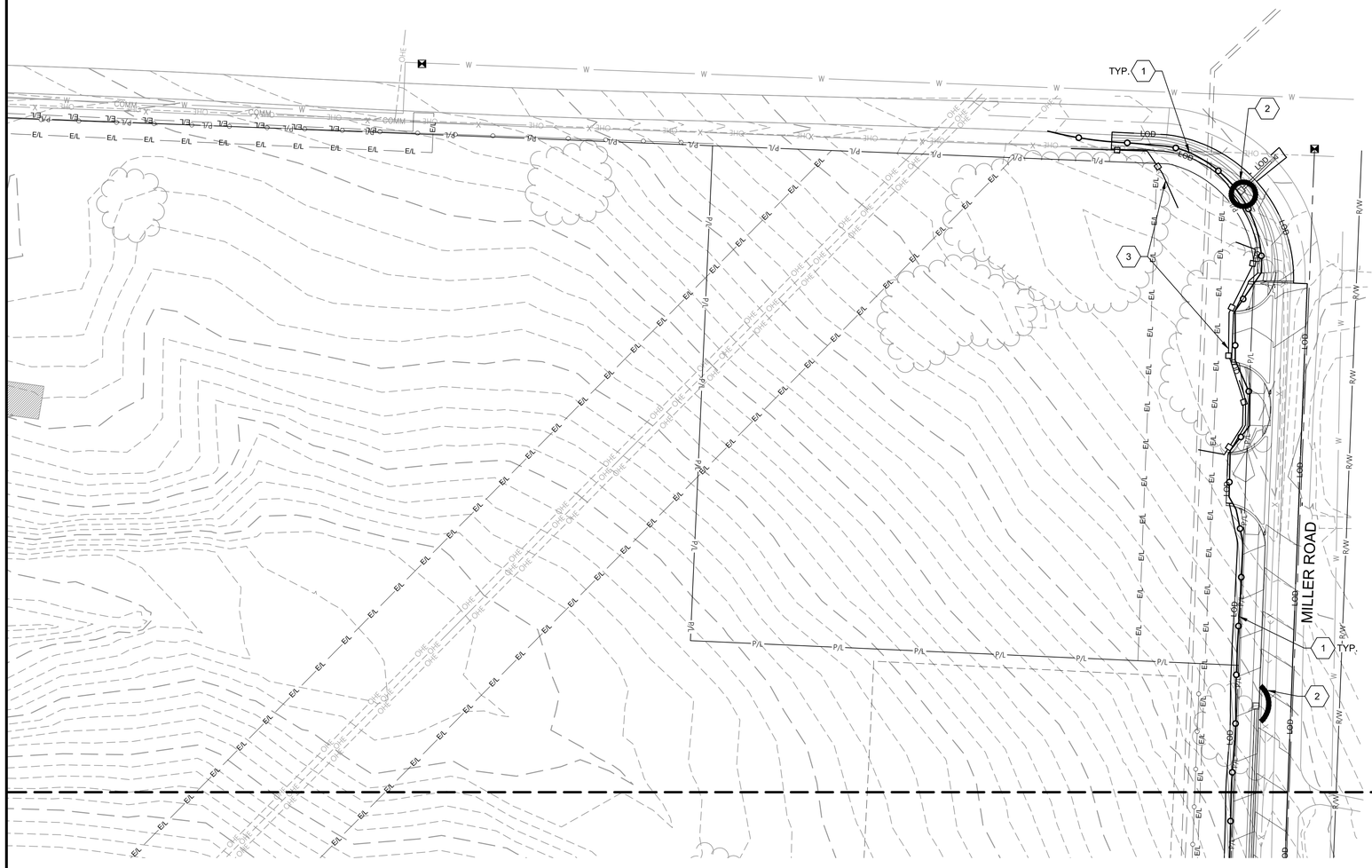

50' 25' 0 50' 100'
HORIZONTAL SCALE 1"=50'

LEGEND

- LOD — LIMITS OF DISTURBANCE
- INSTALL SEDIMENT BARRIER
- TREE(S) TO BE PROTECTED (SEE NOTE #17 & DETAIL ON SHEET C-00-003)
- SEE SHEET C-01-107 FOR TREE(S) TO BE REMOVED
- INSTALL INLET SEDIMENT TRAP
- INSTALL ROCK DITCH CHECK
- INSTALL GRAVEL CONSTRUCTION ENTRANCE/EXIT
- INSTALL CONCRETE WASHOUT
- 1 STORM OUTFALL

GENERAL KEYNOTES:

##

1. INSTALL SEDIMENT BARRIER (SEE DETAIL C ON SHEET C-01-504)
2. INSTALL INLET SEDIMENT TRAP (SEE DETAIL D ON SHEET C-01-504)
3. EXISTING TREE(S) TO BE PRESERVED (SEE DETAIL A ON SHEET C-00-003 FOR ACTUAL LIMITS OF TREE PROTECTION BASED ON TREE CANOPY)
4. EXISTING TREE(S) TO BE REMOVED
5. INSTALL ROCK DITCH CHECK (SEE DETAIL F ON SHEET C-01-504)
6. APPROX. LOCATION OF CONC. WASHOUT (SEE DETAIL B ON SHEET C-01-504)
7. INSTALL CONSTRUCTION ENTRANCE/EXIT (SEE DETAIL A ON SHEET C-01-504)

LAND DISTURBANCE:

TOTAL SITE AREA (LOT 1) = 36.109± AC.

TOTAL AREA DISTURBED (LOT 1 & MILLER ROAD IMPROVEMENTS) = 6.258± AC.

(SCALE BAR IS 4" AT FULL SCALE) 0 1/2 1 2 3 4

BLACK & VEATCH

Black & Veatch Corporation
Kansas City, Missouri

olsson

THIS DOCUMENT WAS ORIGINALLY ISSUED AND SEALED ON JANUARY 24, 2023 BY MATTHEW K. LOOS, A LICENSED PROFESSIONAL ENGINEER IN THE STATE OF ARKANSAS, E-19979

BEAVER WATER DISTRICT

WESTERN CORRIDOR PUMP STATION

100% SET

REVISIONS AND RECORD OF ISSUE

DESIGNED:	RAC
DETAILED:	MVC
CHECKED:	RAC
APPROVED:	MKL
DATE: JANUARY 24, 2023	
PROJECT NO.:	405654

SITE

CIVIL

EROSION CONTROL PLAN NORTH - PHASE 2

C-01-111

PLOTTED: 1/23/2023 4:34:48 PM
FILE: C:\PW_WORKING\BVW_AMERICAS\D1129176\C-01-111.DWG
FD11000
D11000

150' 75' 0 150' 300'

HORIZONTAL SCALE 1"=150'

LEGEND

- PROJECT BOUNDARY
- DRAINAGE AREA BOUNDARY
- TC ROUTE
- FLOW DIRECTION

SUMMARY TABLE			
SUBBASIN	AREA (AC)	CN	TC (MIN.)
EX 10A	12.49	78	24.20
EX 10B	30.80	74	32.60
EX 20	24.38	79	20.00
OFFSITE 30	62.33	*	*

*OFFSITE 30 CALCULATIONS ARE PART OF SPRING CREEK FARMS SUBDIVISION DRAINAGE REPORT DATED MARCH 25, 2020

(SCALE BAR IS 4" AT FULL SCALE) 0 1/2 1 2 3 4

PLOTTED: 1/23/2023 4:33:41 PM
FILE: C:\PW_WORKING\BVW_AMERICAS\D1129176\C-01-112.DWG
PSTYLE: D1100
DYNAMO

Black & Veatch Corporation
Kansas City, Missouri

olsson

THIS DOCUMENT WAS ORIGINALLY ISSUED AND SEALED ON JANUARY 24, 2023 BY MATTHEW K. LOOS, A LICENSED PROFESSIONAL ENGINEER IN THE STATE OF ARKANSAS, E-19979

BEAVER WATER DISTRICT

WESTERN CORRIDOR PUMP STATION

100% SET

REVISIONS AND RECORD OF ISSUE

DESIGNED:	RAC
DETAILED:	MVC
CHECKED:	RAC
APPROVED:	MKL
DATE:	JANUARY 24, 2023
PROJECT NO.:	405654

SITE

CIVIL

EXISTING DRAINAGE AREAS

C-01-112

150' 75' 0 150' 300'
HORIZONTAL SCALE 1"=150'

LEGEND

- PROJECT BOUNDARY
- DRAINAGE AREA BOUNDARY
- TC ROUTE
- FLOW DIRECTION

SUMMARY TABLE			
SUBBASIN	AREA (AC)	CN	TC (MIN.)
DEV 10A	12.49	80	21.90
DEV 10B	30.80	76	32.60
DEV 20A	2.47	87	5.00
DEV 20B	21.91	79	20.00
OFFSITE 30	62.33	*	*

*OFFSITE 30 CALCULATIONS ARE PART OF SPRING CREEK FARMS SUBDIVISION DRAINAGE REPORT DATED MARCH 25, 2020

CURVE NUMBER CALCULATIONS											
DA	AREA 1		AREA 2		AREA 3		AREA 4		AREA 5		Total
	Area (AC)	CN	Area (AC)	CN	Area (AC)	CN	Area (AC)	CN	Area (AC)	CN	CN
EX 10A	4.74	74	7.75	80	-	-	-	-	-	-	**78**
EX 10B	10.25	61	4.74	74	14.29	80	1.42	98	0.10	91	**74**
EX 20	2.94	61	19.98	80	1.46	98	-	-	-	-	**79**
DEV 10A	1.23	74	2.7	80	3.51	74	3.4	80	1.65	98	**80**
DEV 10B	5.94	61	1.82	74	6.95	74	14.51	80	1.58	98	**76**
DEV 20A	1.5	91	0.97	80	-	-	-	-	-	-	**87**
DEV 20B	1.75	98	2.93	61	17.23	80	-	-	-	-	**79**

(SCALE BAR IS 4" AT FULL SCALE) 0 1/2 1 2 3 4

BLACK & VEATCH
Black & Veatch Corporation
Kansas City, Missouri

olsson

THIS DOCUMENT WAS ORIGINALLY ISSUED AND SEALED ON JANUARY 24, 2023 BY MATTHEW K. LOOS, A LICENSED PROFESSIONAL ENGINEER IN THE STATE OF ARKANSAS, E-19979

BEAVER WATER DISTRICT

WESTERN CORRIDOR PUMP STATION

100% SET

REVISIONS AND RECORD OF ISSUE

DESIGNED: RAC
DETAILED: MVC
CHECKED: RAC
APPROVED: MKL
DATE: JANUARY 24, 2023
PROJECT NO.: 405654

SITE

CIVIL

POST CONSTRUCTION DRAINAGE AREAS

C-01-113

PLOTTED: 1/23/2023 4:32:59 PM
FILE: C:\PW_WORKING\BVW_AMERICAS\D1129176\C-01-113.DWG
FD11000
D11000

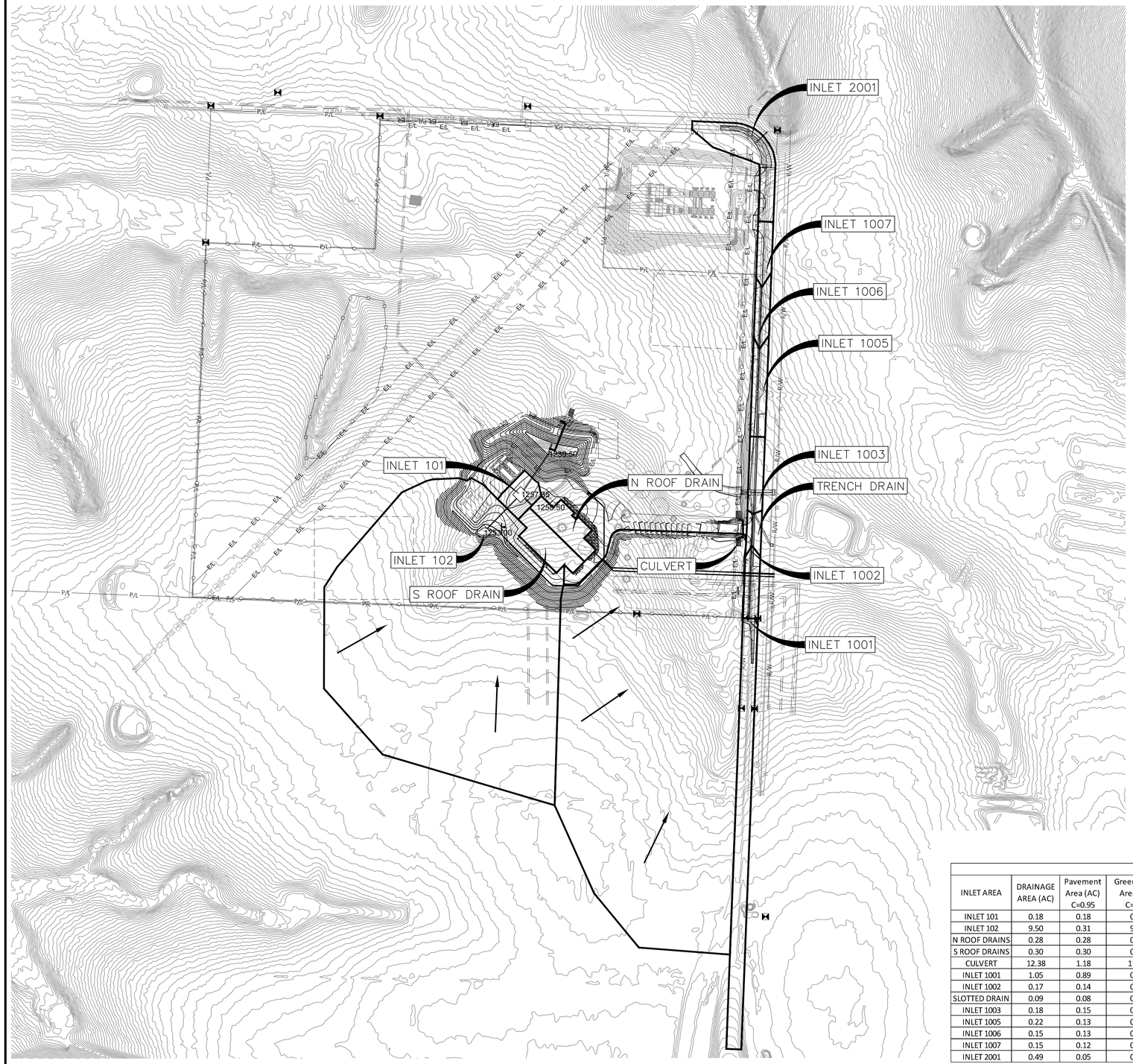

150' 75' 0 150' 300'

HORIZONTAL SCALE 1"=150'

LEGEND

PROJECT BOUNDARY
INLET DRAINAGE AREA BOUNDARY
FLOW DIRECTION

INLET 102	
Sheet Flow	
Manning's n-value	0.24
Flow length (ft.)	100
Two-yr 24-hr rain (in)	3.85
Land Slope (%)	1
Sheet flow time (min.)	17.17
Shallow Concentrated Flow	
Flow Length	818
Watercourse slope (%)	4.00
Surface Description	unpaved
Shallow conc. flow time	4.22
Time of Conc., Tc (min.)	**21.4**

CULVERT	
Sheet Flow	
Manning's n-value	0.24
Flow length (ft.)	100
Two-yr 24-hr rain (in)	3.85
Land Slope (%)	1.5
Sheet flow time (min.)	14.6
Shallow Concentrated Flow	
Flow Length	1040
Watercourse slope (%)	1.45
Surface Description	unpaved
Shallow conc. flow time	8.92
Time of Conc., Tc (min.)	**23.5**

DRAINAGE AREAS RATIONAL METHOD CALCULATIONS

INLET AREA	DRAINAGE AREA (AC)	Pavement Area (AC) C=0.95	Green Space Area (AC) C=0.30	RUNOFF COEFFICIENT "C"	RUNOFF COEFFICENT "C" 25 (1.1)	RUNOFF COEFFICENT "C" 100 (1.25)	Time of Concentration "Tc" (min)	2-YEAR INTENSITY	25-YEAR INTENSITY	100-YEAR INTENSITY	Q2year (CFS)	Q25year (CFS)	Q100year (CFS)
INLET 101	0.18	0.18	0.00	0.95	1.00	1.00	5.00	5.61	8.82	10.15	0.96	1.51	1.83
INLET 102	9.50	0.31	9.19	0.32	0.35	0.40	21.40	3.36	5.12	6.35	10.25	15.62	24.22
N ROOF DRAINS	0.28	0.28	0.00	0.95	1.00	1.00	5.00	5.61	8.82	10.15	1.49	2.35	2.84
S ROOF DRAINS	0.30	0.30	0.00	0.95	1.00	1.00	5.00	5.61	8.82	10.15	1.60	2.51	3.05
CULVERT	12.38	1.18	11.20	0.36	0.40	0.45	23.50	3.20	4.90	6.09	14.34	21.96	34.11
INLET 1001	1.05	0.89	0.16	0.85	0.94	1.00	5.00	5.61	8.82	10.15	5.01	7.88	10.66
INLET 1002	0.17	0.14	0.03	0.84	0.92	1.00	5.00	5.61	8.82	10.15	0.80	1.25	1.73
SLOTTED DRAIN	0.09	0.08	0.01	0.88	0.97	1.00	5.00	5.61	8.82	10.15	0.44	0.70	0.91
INLET 1003	0.18	0.15	0.03	0.84	0.93	1.00	5.00	5.61	8.82	10.15	0.85	1.34	1.83
INLET 1005	0.22	0.13	0.09	0.68	0.75	0.86	5.00	5.61	8.82	10.15	0.84	1.33	1.91
INLET 1006	0.15	0.13	0.02	0.86	0.95	1.00	5.00	5.61	8.82	10.15	0.73	1.14	1.52
INLET 1007	0.15	0.12	0.03	0.82	0.90	1.00	5.00	5.61	8.82	10.15	0.69	1.08	1.52
INLET 2001	0.49	0.05	0.44	0.37	0.40	0.46	5.00	5.61	8.82	10.15	1.01	1.58	2.28

*MINIMUM TIME OF CONCENTRATION IS 5 MINUTES. ANY Tc HIGHER THAN 5 MINUTESCALCULATED USING THE TR55 METHOD. SEE TABLES ON THIS SHEET FOR Tc CALCULATIONS.

(SCALE BAR IS 4" AT FULL SCALE) 0 1/2 1 2 3 4

PLOTTED: 1/23/2023 4:31:51 PM
FILE: C:\PW_WORKING\BVW_AMERICAS\D1129176\C-01-114.DWG
PD1000
D1043

BLACK & VEATCH
Black & Veatch Corporation
Kansas City, Missouri

olsson

THIS DOCUMENT WAS ORIGINALLY ISSUED AND SEALED ON JANUARY 24, 2023 BY MATTHEW K. LOOS, A LICENSED PROFESSIONAL ENGINEER IN THE STATE OF ARKANSAS, E-19979

BEAVER WATER DISTRICT

WESTERN CORRIDOR PUMP STATION

100% SET

REVISIONS AND RECORD OF ISSUE

DESIGNED:	RAC
DETAILED:	MVC
CHECKED:	RAC
APPROVED:	MKL
DATE:	JANUARY 24, 2023
PROJECT NO.:	405654

SITE

CIVIL

POST CONSTRUCTION INLET DRAINAGE AREAS

C-01-114

STORM DRAIN

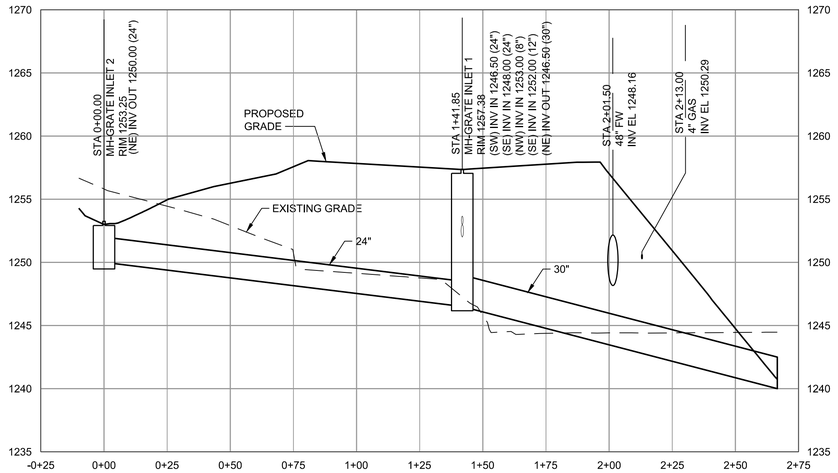

48IN FW TO FAYETTEVILLE

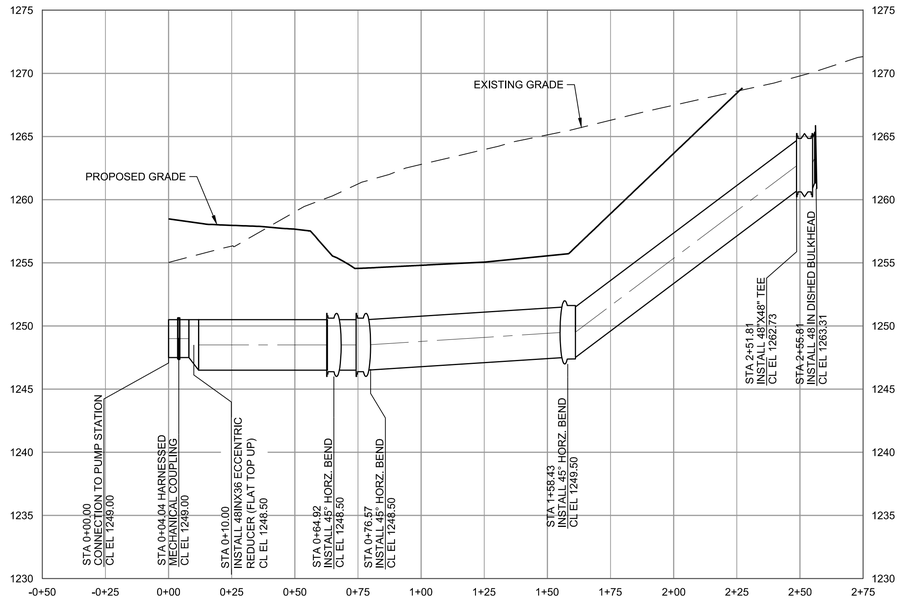

60IN TW TRANSMISSION MAIN

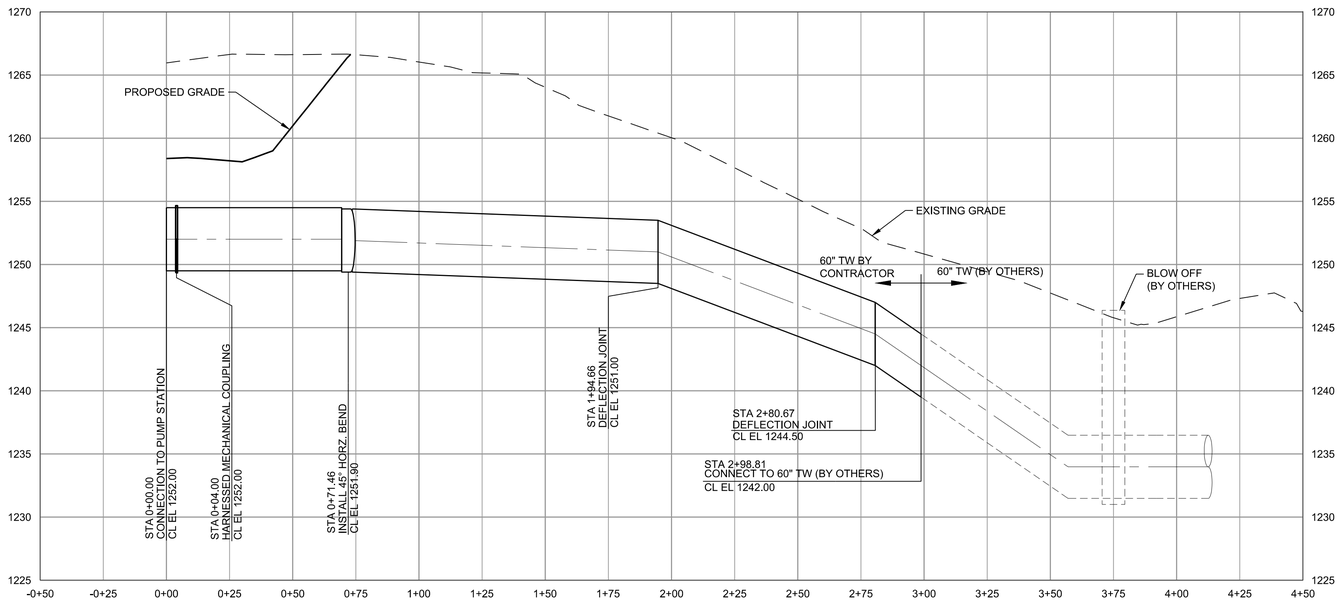

30' 15' 0 30' 60'
HORIZONTAL SCALE 1"=30'

(SCALE BAR IS 4" AT FULL SCALE) 0 1/2 1 2 3 4

BLACK & VEATCH

Black & Veatch Corporation
Kansas City, Missouri

olsson

THIS DOCUMENT WAS ORIGINALLY ISSUED AND SEALED ON JANUARY 24, 2023 BY ANDREW J. HANSEN, A LICENSED PROFESSIONAL ENGINEER IN THE STATE OF ARKANSAS, E-14664

BEAVER WATER DISTRICT

WESTERN CORRIDOR PUMP STATION

100% SET

REVISIONS AND RECORD OF ISSUE

DESIGNED:	CJK
DETAILED:	NGH
CHECKED:	JCH
APPROVED:	AJH
DATE: JANUARY 24, 2023	
PROJECT NO.:	405654

SITE

CIVIL

PIPING PROFILES
(1 OF 3)

C-01-301

PLOTTED: 1/20/2023 9:20:33 AM
FILE: C:\PW_WORKING\BVW_AMERICAS\D1129176\C-01-301.DWG
FD11000
D11000

36IN FW TO FUTURE ROGERS

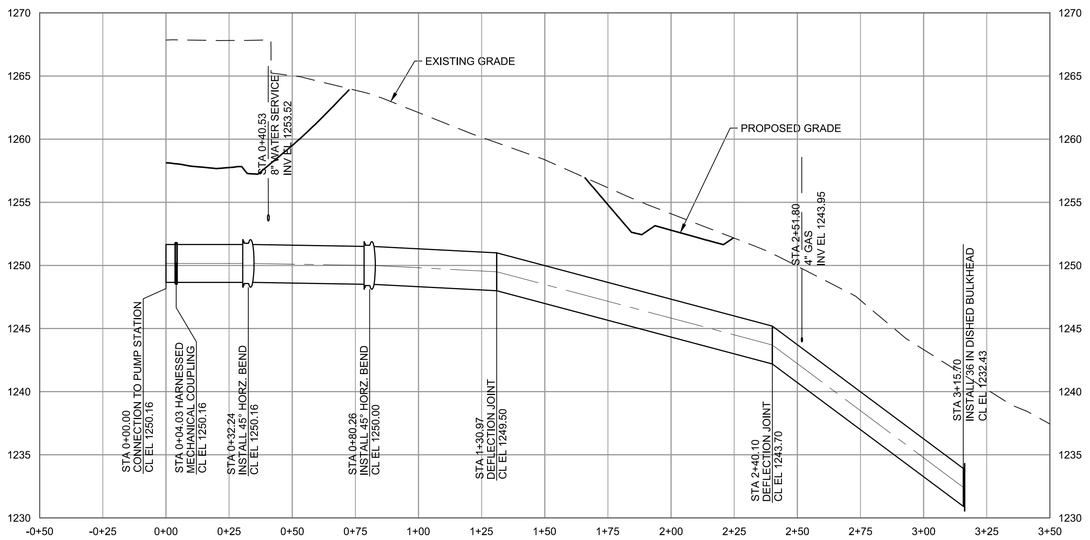

48IN FW TO SPRINGDALE

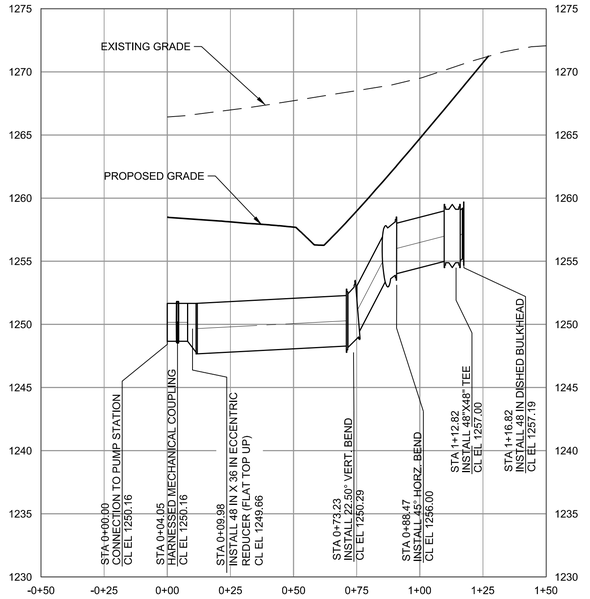

8IN PRIVATE FIRE MAIN

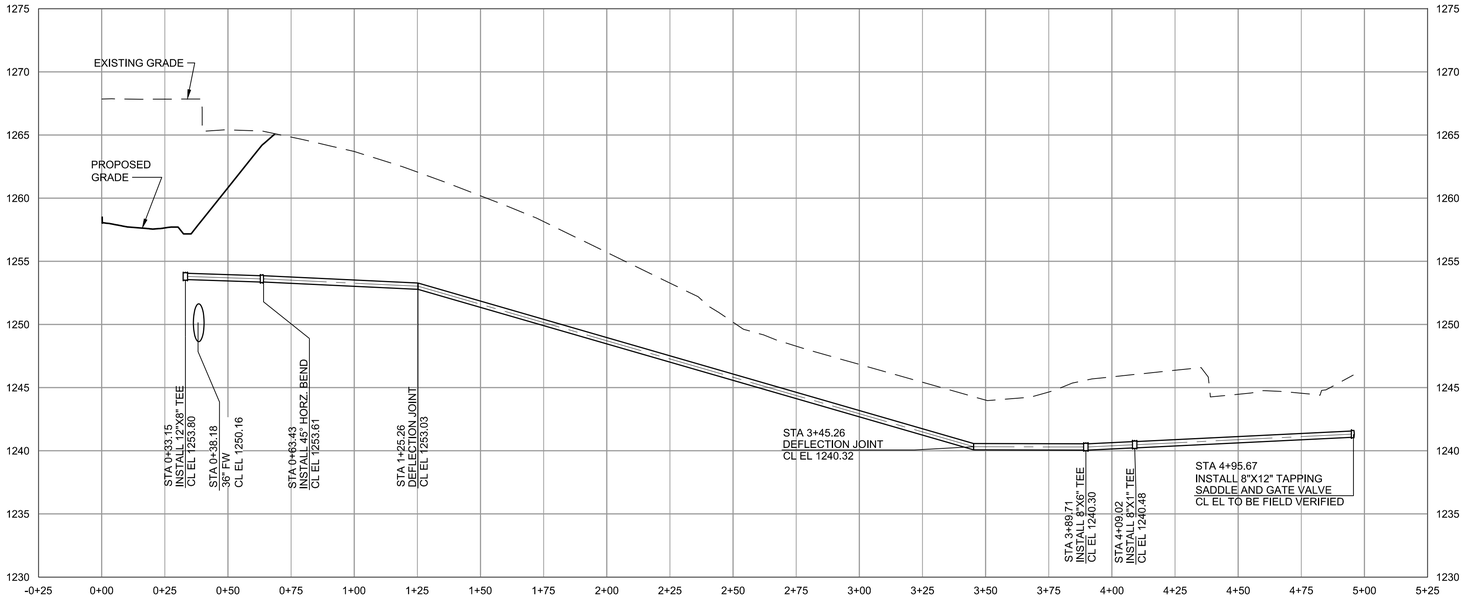

30' 15' 0 30' 60'
HORIZONTAL SCALE 1"=30'

(SCALE BAR IS 4" AT FULL SCALE) 0 1/2 1 2 3 4

BLACK & VEATCH

Black & Veatch Corporation
Kansas City, Missouri

olsson

THIS DOCUMENT WAS ORIGINALLY ISSUED AND SEALED ON JANUARY 24, 2023 BY ANDREW J. HANSEN, A LICENSED PROFESSIONAL ENGINEER IN THE STATE OF ARKANSAS, E-14664

BEAVER WATER DISTRICT

WESTERN CORRIDOR PUMP STATION

100% SET

REVISIONS AND RECORD OF ISSUE

DESIGNED:	CJK
DETAILED:	NGH
CHECKED:	JCH
APPROVED:	AJH
DATE: JANUARY 24, 2023	
PROJECT NO.:	405654

SITE

CIVIL

PIPING PROFILES (2 OF 3)

C-01-302

PLOTTED: 1/20/2023 9:21:40 AM
FILE: C:\PW_WORKING\BVW_AMERICAS\D1129176\C-01-302.DWG
FD11000
D11000

60IN TW TRANSMISSION MAIN TO FUTURE CONNECTION

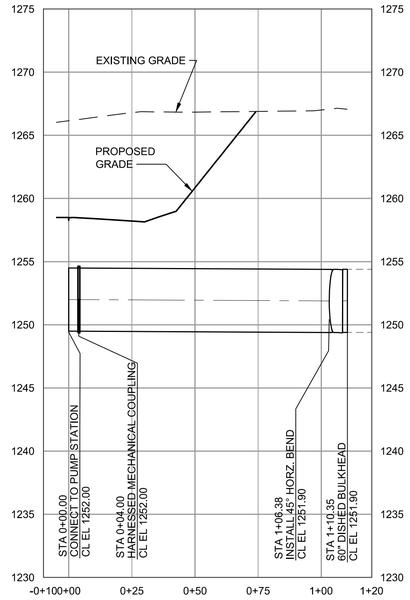

48IN FW TO FUTURE BENTONVILLE

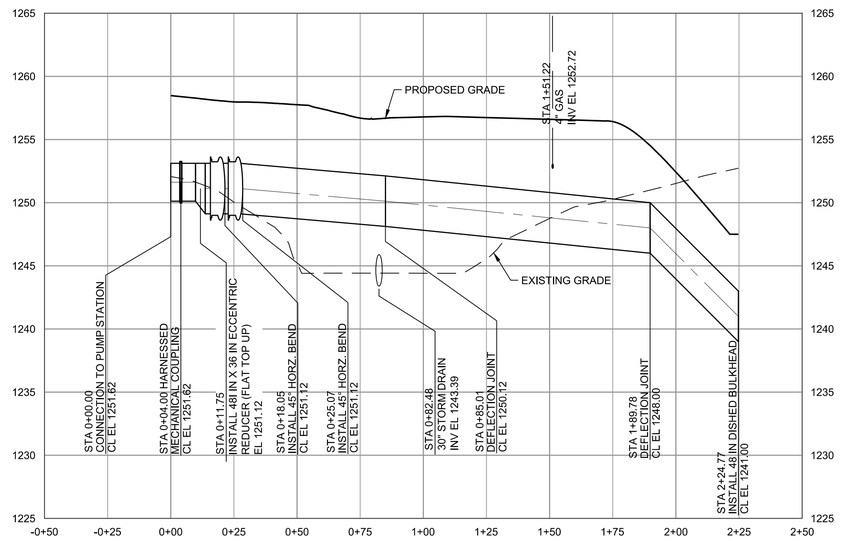

4IN NATURAL GAS

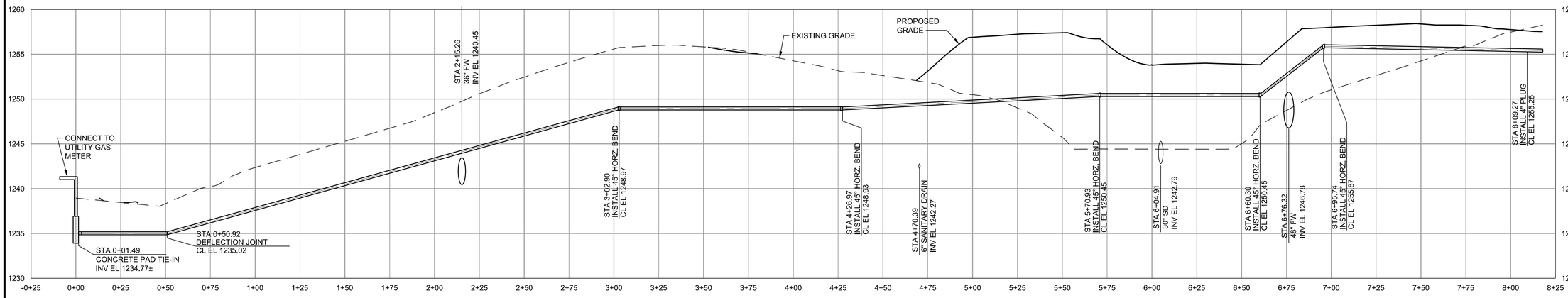

30' 15' 0 30' 60'
HORIZONTAL SCALE 1"=30'

(SCALE BAR IS 4" AT FULL SCALE) 0 1/2 1 2 3 4

PLOTTED: 1/20/2023 9:23:05 AM
FILE: C:\PW_WORKING\BVW_AMERICAS\D1129176\C-01-303.DWG
D1:1000
D1:1000

BLACK & VEATCH
Black & Veatch Corporation
Kansas City, Missouri

olsson

THIS DOCUMENT WAS ORIGINALLY ISSUED AND SEALED ON JANUARY 24, 2023 BY ANDREW J. HANSEN, A LICENSED PROFESSIONAL ENGINEER IN THE STATE OF ARKANSAS, E-14664

BEAVER WATER DISTRICT

WESTERN CORRIDOR PUMP STATION

100% SET

REVISIONS AND RECORD OF ISSUE

DESIGNED:	CJK
DETAILED:	NGH
CHECKED:	JCH
APPROVED:	AJH
DATE:	JANUARY 24, 2023
PROJECT NO.:	405654

SITE

CIVIL

PIPING PROFILES (3 OF 3)

C-01-303

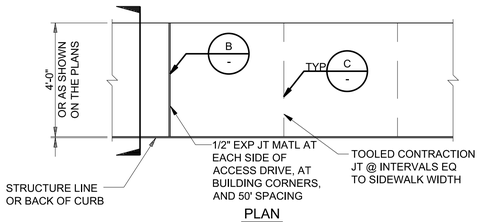

PLAN
3/8"=1'-0"

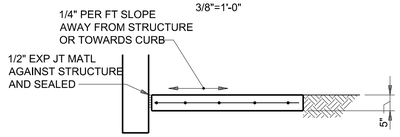

SECTION
1/2"=1'-0"

A - SIDEWALK
SCALES AS SHOWN

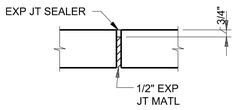

B - SIDEWALK EXPANSION JOINT
1-1/2" = 1'-0"

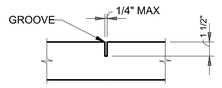

C - SIDEWALK TOOLED CONTRACTION JOINT
1-1/2" = 1'-0"

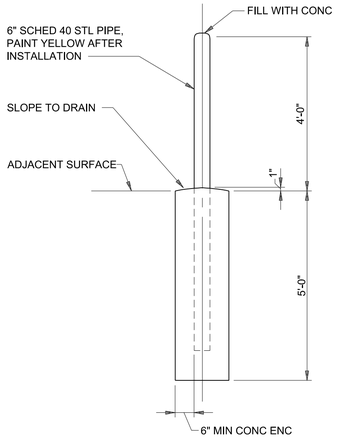

D - BOLLARD
NO SCALE

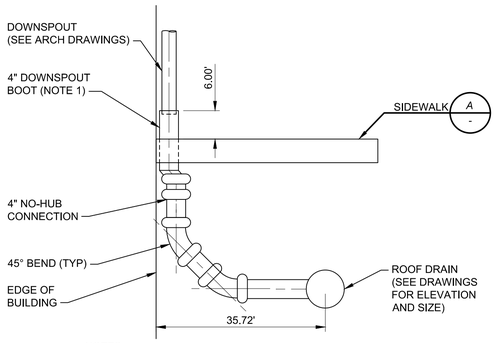

NOTES:
1. DOWNSPOUT BOOT SHALL BE GALVANIZED STEEL OR CAST IRON AS MANUFACTURED BY ZURN, JOSAM, JR SMITH, OR EQUAL.

E - DOWNSPOUT CONNECTION
NO SCALE

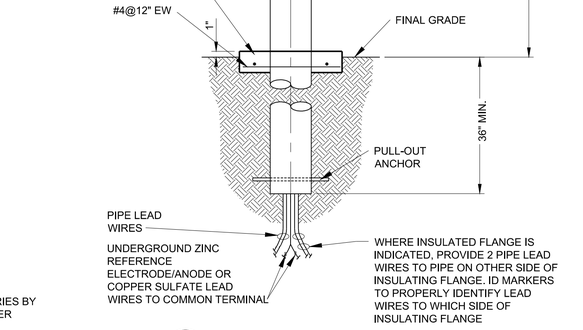

H - MULTIPLE ANODE TEST STATION TERMINATION
NO SCALE

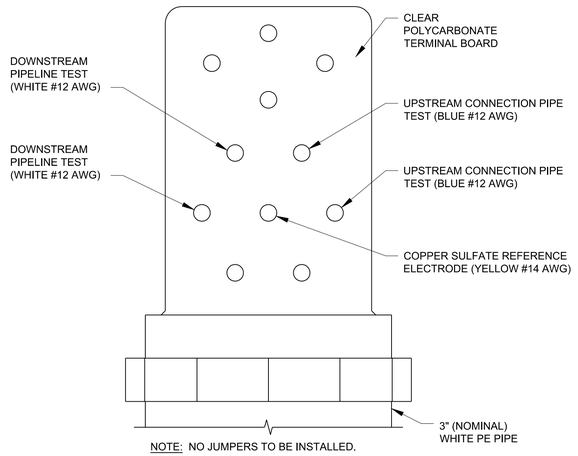

NOTE: NO JUMPERS TO BE INSTALLED.

I - BURIED INSULATED FLANGE TEST STATION TERMINATION
NO SCALE

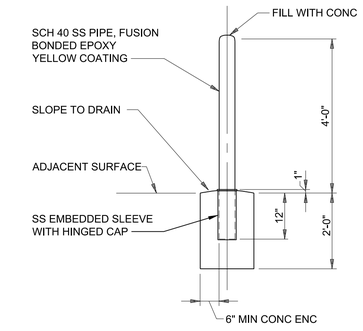

F - REMOVABLE BOLLARD
NO SCALE

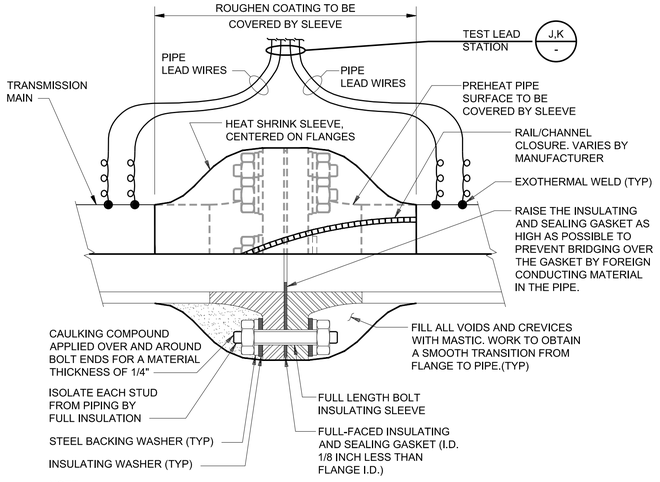

NOTE:
1. WIRE COLORS: ELECTRODE UPSTREAM OF JOINT SHALL BE BLUE. DOWNSTREAM SHALL BE WHITE AND ALL REFERENCE ELECTRODES SHALL BE YELLOW IN COLOR.

G - INSULATED FLANGE
NO SCALE

J - POST TYPE TEST STATION
NO SCALE

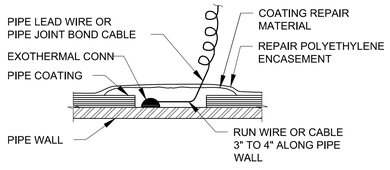

L - PIPE LEAD WIRE & PIPE JOINT BOND EXOTHERMAL CONNECTION METHOD
NO SCALE

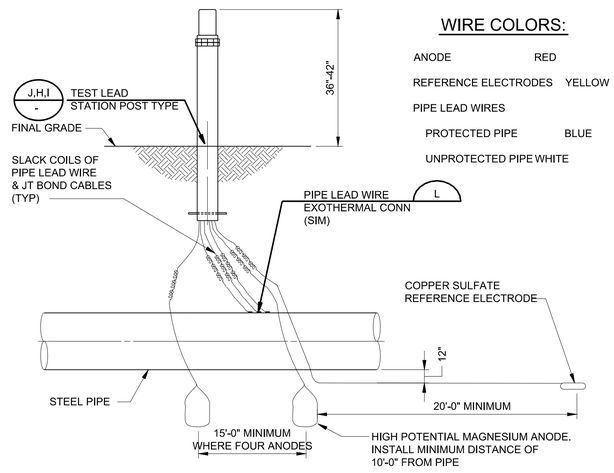

K - STEEL PIPE ANODE SEGMENT WITH TEST LEAD STATION
NO SCALE

WIRE COLORS:

ANODE	RED
REFERENCE ELECTRODES	YELLOW
PIPE LEAD WIRES	
PROTECTED PIPE	BLUE
UNPROTECTED PIPE	WHITE

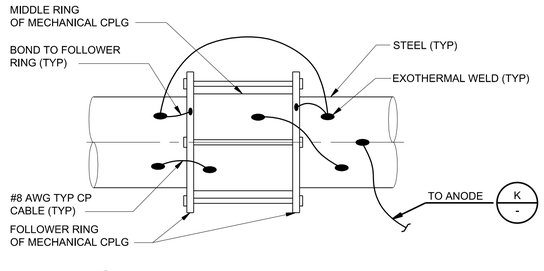

M - JOINT BONDING OF MECHANICAL CPLG
NO SCALE

BLACK & VEATCH
Black & Veatch Corporation
Kansas City, Missouri

olsson

THIS DOCUMENT WAS ORIGINALLY ISSUED AND SEALED ON JANUARY 24, 2023 BY ANDREW J. HANSEN, A LICENSED PROFESSIONAL ENGINEER IN THE STATE OF ARKANSAS, E-14664

BEAVER WATER DISTRICT

WESTERN CORRIDOR PUMP STATION

100% SET

REVISIONS AND RECORD OF ISSUE

DESIGNED:	CJK
DETAILED:	NGH
CHECKED:	JCH
APPROVED:	AJH
DATE:	JANUARY 24, 2023
PROJECT NO.:	405654

SITE

CIVIL

SITEWORK DETAILS (1 OF 2)

C-01-501

25 OF 159

PLOTTED: 1/20/2023 9:47:19 AM
FILE: C:\PW_WORKING\BWW_AMERICAS\D1129176\C-01-501.DWG
ES1:1000
ES1:500

(SCALE BAR IS 4" AT FULL SCALE) 0 1/2 1 2 3 4

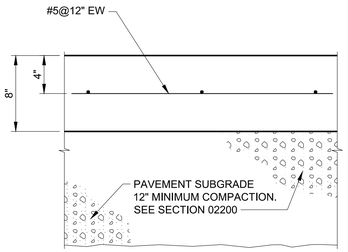

B - CONCRETE PAVEMENT
1 1/2"=1'-0"

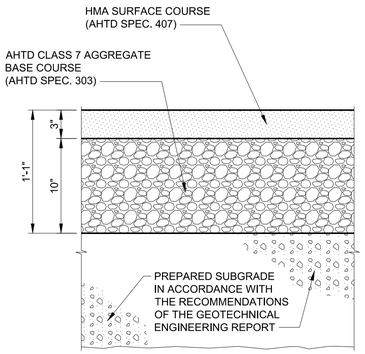

C - ASPHALT PAVEMENT
1 1/2"=1'-0"

NOTE:

CONTRACTOR TO COORDINATE PAVEMENT SECTIONS WITH GEOTECHNICAL REPORT PROVIDED BY GRUBBS, HOSKYN, BARTON & WYATT, INC. ON SEPTEMBER 17, 2021 AND ALL ADDENDUMS

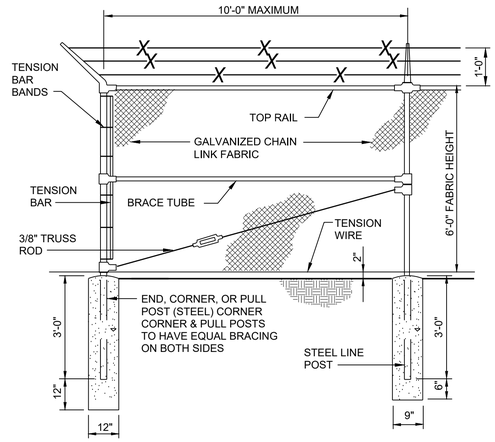

D - CHAIN LINK SECURITY FENCE DETAIL
NO SCALE

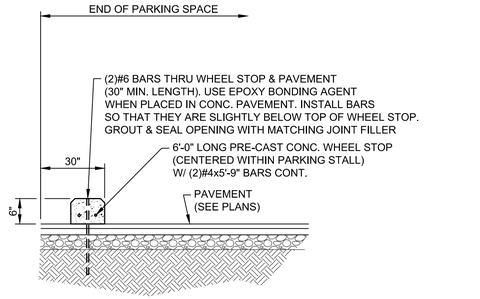

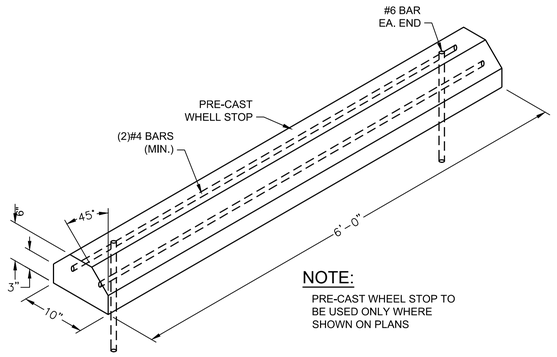

NOTE:

PRE-CAST WHEEL STOP TO BE USED ONLY WHERE SHOWN ON PLANS

E - PRECAST CONC. WHEELSTOP
NO SCALE

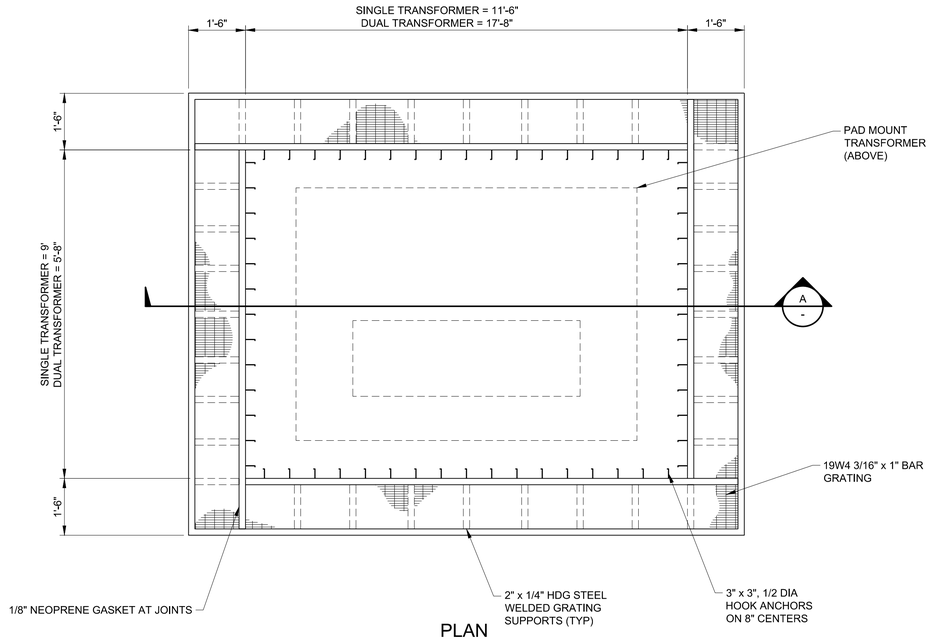

PLAN

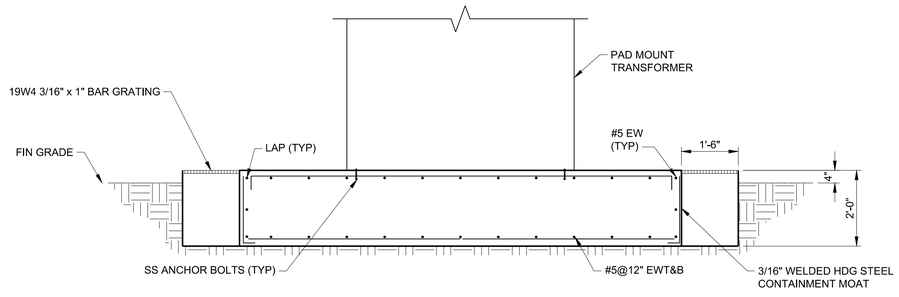

SECTION

A - PAD MOUNT TRANSFORMER
1/2"=1'-0"

LIFT VAN ACCESSIBLE PARKING SPACE SIGN
(PER MUTCD) CENTERED ON EACH
ACCESSIBLE SPACE AS SHOWN.
COORD. WITH PLAN & SEE SIGN
DETAILS THIS SHEET

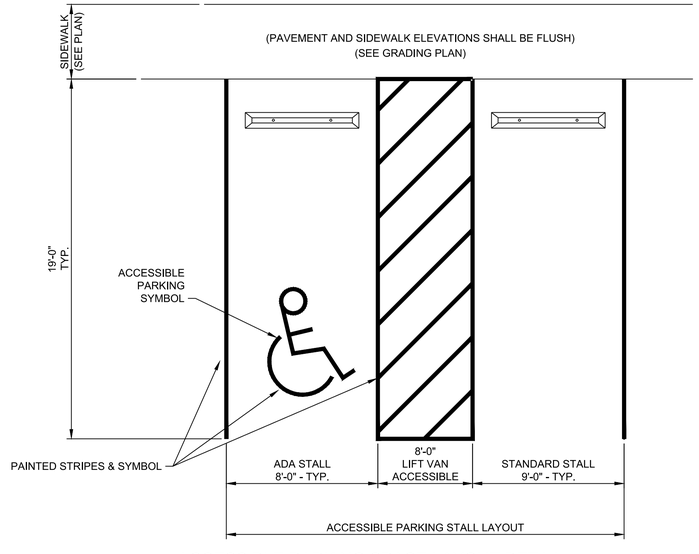

ACCESSIBLE PARKING SPACE LAYOUT DETAIL

NOTE

ACCESSIBLE PARKING SYMBOL & SIGNAGE SHALL COMPLY WITH THE APPLICABLE RECOMMENDATIONS OF THE MANUAL OF UNIFORM TRAFFIC CONTROL DEVICES (MUTCD).

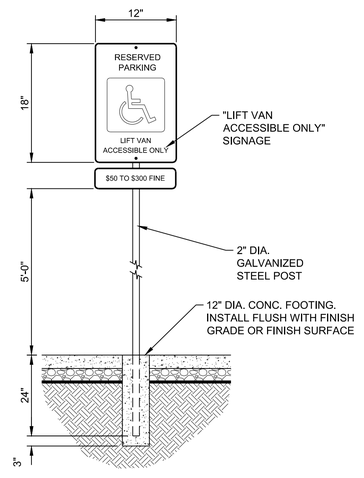

POLE MOUNTED LIFT VAN ACCESSIBLE SIGN

F - ACCESSIBLE PARKING DETAILS
NO SCALE

(SCALE BAR IS 4" AT FULL SCALE) 0 1/2 1 2 3 4

PLOTTED: 1/20/2023 9:43:26 AM
FILE: C:\PW_WORKING\BWW_AMERICAS\D1129176\C-01-502.DWG
PD1:1000
PD1:000

Black & Veatch Corporation
Kansas City, Missouri

olsson

THIS DOCUMENT WAS ORIGINALLY ISSUED AND SEALED ON JANUARY 24, 2023 BY ANDREW J. HANSEN, A LICENSED PROFESSIONAL ENGINEER IN THE STATE OF ARKANSAS, E-14664

BEAVER WATER DISTRICT

WESTERN CORRIDOR PUMP STATION

100% SET

REVISIONS AND RECORD OF ISSUE

DESIGNED:	CJK
DETAILED:	NGH
CHECKED:	JCH
APPROVED:	AJH
DATE:	JANUARY 24, 2023
PROJECT NO.:	405654

SITE

CIVIL

SITEWORK DETAILS
(2 OF 2)

C-01-502

NOTES:

1. BOTTOM TO BE POURED IN PLACE.
2. PIPE TO BE ON GRADE BEFORE BOTTOM IS CONSTRUCTED.
3. RAM-NEK ALL JOINTS (OR EQUAL).
4. REINFORCING BARS SHALL BE CUT OR BENT AT PIPE OPENINGS.
5. ALL PIPES SHALL FIT FLUSH WITH INSIDE FACE OF BOX.
6. ALL CONCRETE SHALL HAVE 28 DAY COMPRESSIVE STRENGTH OF 4,000 PSI.
7. ALL REINFORCING BARS TO BE DEFORMED BARS AND MEET REQUIREMENTS OF 1966 ASTM STANDARDS NO. A-615-68 MIN. GRADE 40.
8. MUST MAINTAIN 6" CLEARANCE BETWEEN THE PIPE AND WALLS FOR PRECAST BOXES.
9. SEE SPECIFICATIONS FOR PRECAST VAULT DESIGN AND CONSTRUCTION REQUIREMENTS.

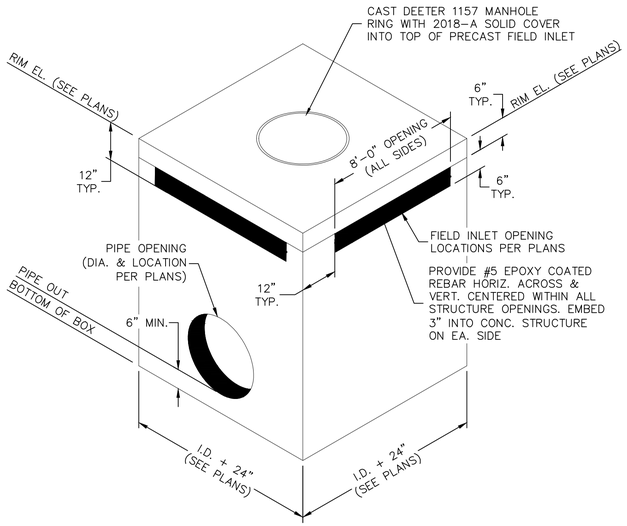

A - NO SCALE
FIELD INLET DETAIL

NOTES:

1. BOTTOM TO BE POURED IN PLACE.
2. PIPE TO BE ON GRADE BEFORE BOTTOM IS CONSTRUCTED.
3. RAM-NEK ALL JOINTS (OR EQUAL).
4. REINFORCING BARS SHALL BE CUT OR BENT AT PIPE OPENINGS.
5. ALL PIPES SHALL FIT FLUSH WITH INSIDE FACE OF BOX.
6. ALL CONCRETE SHALL HAVE 28 DAY COMPRESSIVE STRENGTH OF 4,000 PSI.
7. ALL REINFORCING BARS TO BE DEFORMED BARS AND MEET REQUIREMENTS OF 1966 ASTM STANDARDS NO. A-615-68 MIN. GRADE 40.
8. MUST MAINTAIN 6" CLEARANCE BETWEEN THE PIPE AND WALLS FOR PRECAST BOXES.
9. SEE SPECIFICATIONS FOR PRECAST VAULT DESIGN AND CONSTRUCTION REQUIREMENTS.

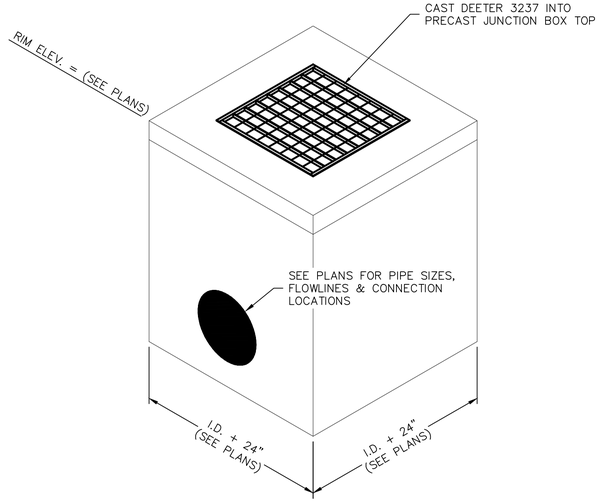

B - NO SCALE
GRATE INLET DETAIL

CHANNEL NOTES:

1. INSTALL PERMANENT NORTH AMERICAN GREEN, VMAX SC250 ON OPEN CHANNEL SIDE SLOPES & BOTTOM AS SHOWN. INSTALL PER MANUFACTURES SPECIFICATIONS.
2. ALL ADDITIONAL DISTURBED AREAS & CHANNELS SHALL BE PROTECTED FROM EROSION AND PERMANENTLY SEEDED IN ACCORDANCE WITH THE REQUIREMENTS ON SHEET C4.1.

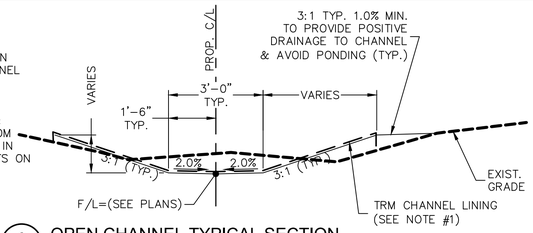

C - NO SCALE
OPEN CHANNEL TYPICAL SECTION

TRENCH BACKFILL REQUIREMENTS	
PERCENT PASSING	SIEVE SIZE
100	3/4-INCH
60-100	1/2-INCH
0-5	NO. 4

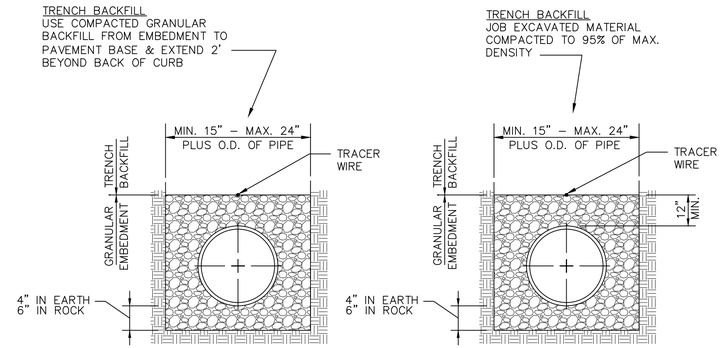

UNDER PAVEMENT

OUTSIDE PAVEMENT

D - NO SCALE
STORM SEWER PIPE BEDDING DETAILS

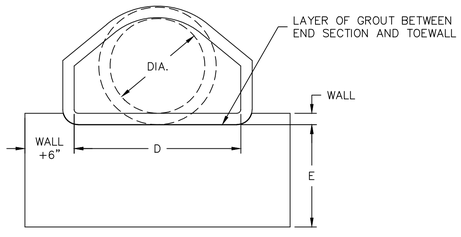

END VIEW

DIMENSIONS						
DIA.	WALL	A	B MIN.	C MIN.	D	E
12"	2"	4"	4'-0"	6'	2'-0"	18"
15"	2 1/4"	6"	3'-10"	6'	2'-6"	18"
18"	2 1/2"	9"	3'-10"	6'	3'-0"	18"
21"	2 3/4"	9"	3'-2"	6'	3'-6"	18"
24"	3"	9 1/2"	2'-6"	6'	4'-0"	24"
30"	3 1/2"	1-0"	1'-7"	6'	5'-0"	24"
36"	4"	1'-3"	2'-10"	8'	6'-0"	24"
42"	4 1/2"	1'-9"	2'-11"	8'	6'-6"	24"
48"	5"	2'-0"	2'-2"	8'	7'-0"	24"
54"	5 1/2"	2'-3"	2'-11"	8'	7'-6"	36"

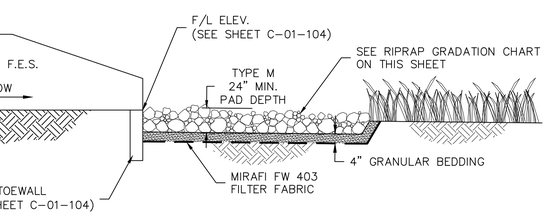

NOTES:
1. RIPRAP SHALL BE PLACED IN SUCH A MANNER AS TO AVOID SEGREGATION OF VARIOUS SIZES OF ROCK, AND DISTRIBUTED SO THAT THERE WILL BE NO LARGE ACCUMULATION OF EITHER THE LARGER OR SMALLER SIZES OF STONE.
2. INDIVIDUAL ROCKS SHALL BE PLACED IN TIGHT CONTACT WITH ONE ANOTHER IN SUCH A WAY TO PRODUCE THE LEAST AMOUNT OF VOID SPACES.
3. RIPRAP SHALL BE SOLID, UNFRACTURED ROCK OR CONCRETE, BULKY IN SHAPE WITH SHARP, ANGULAR EDGES.
4. GRANULAR BEDDING SHALL CONSIST OF 1" CLEAN, FRACTURED LIMESTONE.
5. INSTALL FILTER FABRIC ACCORDING TO MANUFACTURER'S RECOMMENDATIONS.

CLASSIFICATION & GRADATION OF RIPRAP			
RIPRAP DESIGNATION	PERCENT (%) SMALLER THAN GIVEN BY WEIGHT	INTERMEDIATE ROCK DIMENSION (INCHES)	D_{50} (INCHES)*
TYPE L	70-100 50-70 35-50 2-10	15 12 9 3	9
TYPE M	70-100 50-70 35-50 2-10	21 18 12 4	12**

*d_{50} = MEAN PARTICLE SIZE (INTERMEDIATE DIMENSION).

**MIX TYPE L RIPRAP WITH 30 PERCENT (BY VOLUME) TOPSOIL AND BURY IT WITH 6 OR MORE INCHES OF TOPSOIL, ALL VIBRATION COMPACTED.

E - NO SCALE
RIPRAP APRON DETAIL

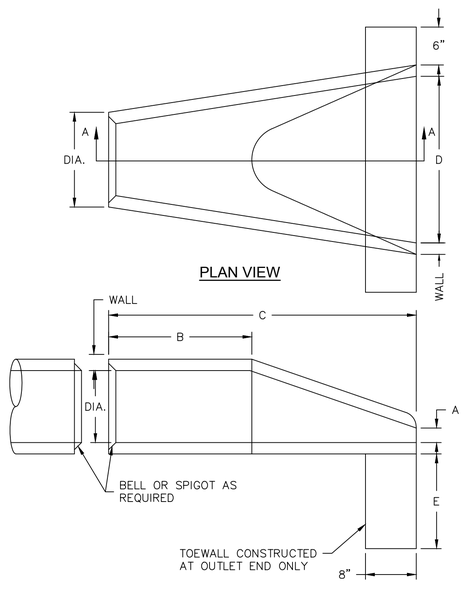

REINFORCEMENT					
ADJOINING PIPE DIA.	BARREL SECTION REINFORCEMENT			FLARE SECTION REINFORCEMENT (ONE LAYER ONLY IN CENTER OF WALL)	
	CIRCULAR		ELLIPTICAL		
	INNER CAGE SQ. IN./ LIN. FT.	OUTER CAGE SQ. IN./ LIN. FT.	SQ. IN./ LIN. FT.	AREA OF LONGITUDINAL SQ. IN./ LIN. FT.	AREA OF TRANSVERSE SQ. IN./ LIN. FT.
12"	0.07			0.048	0.048
15"	0.07			0.054	0.054
18"	0.07		0.07	0.060	0.060
21"	0.07		0.07	0.066	0.066
24"	0.07		0.07	0.072	0.072
30"	0.14		0.12	0.084	0.084
36"	0.12	0.09	0.13	0.096	0.096
42"	0.15	0.12	0.17	0.108	0.108
48"	0.18	0.14	0.20	0.120	0.120
54"	0.22	0.16	0.24	0.132	0.132

F - NO SCALE
CONC. F.E.S. DETAILS

(SCALE BAR IS 4" AT FULL SCALE) 0 1/2 1 2 3 4

PLOTTED: 1/23/2023 4:31:11 PM
FILE: C:\PW_WORKING\BVW_AMERICAS\D1129176\C-01-503.DWG
D1:1000
D1:1000

BLACK & VEATCH
Black & Veatch Corporation
Kansas City, Missouri

olsson

THIS DOCUMENT WAS ORIGINALLY ISSUED AND SEALED ON JANUARY 24, 2023 BY MATTHEW K. LOOS, A LICENSED PROFESSIONAL ENGINEER IN THE STATE OF ARKANSAS, E-19979

BEAVER WATER DISTRICT

WESTERN CORRIDOR PUMP STATION

100% SET

REVISIONS AND RECORD OF ISSUE

DESIGNED:	RAC
DETAILED:	MVC
CHECKED:	RAC
APPROVED:	MKL
DATE:	JANUARY 24, 2023
PROJECT NO.:	405654

SITE

CIVIL

STORM SEWER DETAILS

C-01-503

DITCH CHECK SPACING (ROCK OR FIBER MATERIAL)	
DITCH SLOPE (%)	SPACING @ 18" EFFECTIVE HT. (FT.)
1.0	150
2.0	75
3.0	50
4.0	38
5.0	30
6.0	25
7.0	21
8.0	19
9.0	17
10.0	15

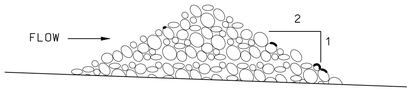

SECTION A-A

NOTES:

1. DITCH CHECK IN THE CLEAR ZONE SHALL BE REMOVED JUST BEFORE INSTALLATION OF SOD.
2. DITCH CHECK SPACING SHALL BE PER CHART ON THIS SHEET.

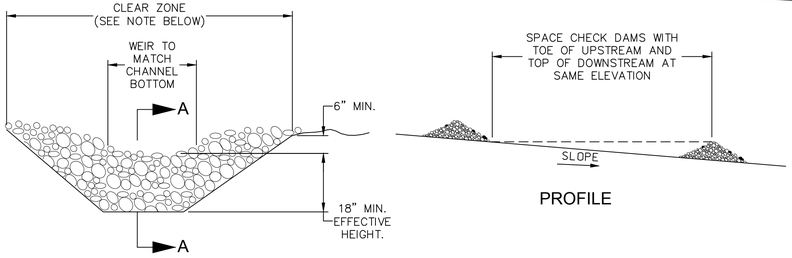

FRONT VIEW

PROFILE

F - ROCK DITCH CHECK DETAIL
NO SCALE

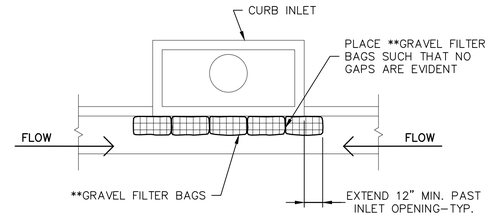

PLAN VIEW ON GRADE OR @ SUMP

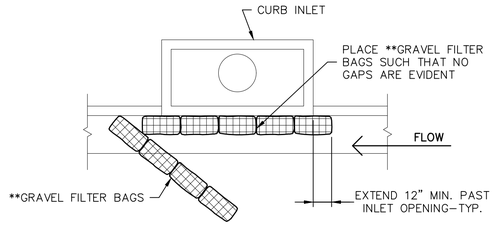

PLAN VIEW @ END OF DRIVE

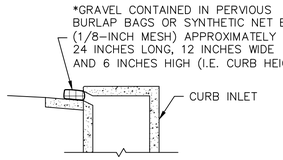

SECTION VIEW

NOTE:

GRAVEL BAGS (**FILTER SOCKS) SHALL BE INSPECTED AND REPLACED AS NEEDED

* 5/8 – 1 1/2" CRUSHED LIMESTONE

** COMPOST FILTER SOCKS MAY BE USED IN LIEU OF GRAVEL BAGS

D - CURB INLET SEDIMENT TRAP DETAILS
NO SCALE

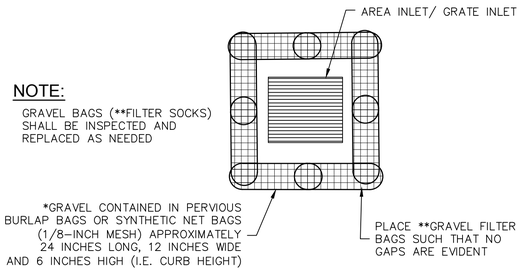

NOTE:

GRAVEL BAGS (**FILTER SOCKS) SHALL BE INSPECTED AND REPLACED AS NEEDED

* 5/8 – 1 1/2" CRUSHED LIMESTONE

** COMPOST FILTER SOCKS MAY BE USED IN LIEU OF GRAVEL BAGS

AREA INLET / GRATE INLET PROTECTION DETAIL
NOT TO SCALE

E - AREA INLET / GRATE INLET PROTECTION DETAIL
NO SCALE

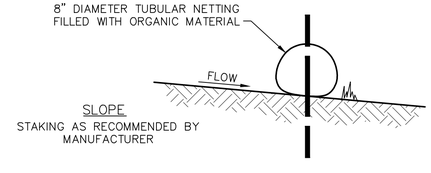

SEDIMENT BARRIER NOTES:

1. PLACE SEDIMENT BARRIER AT DOWNSLOPE LIMIT OF AREA TO BE GRADED AS NECESSARY.
2. FASTEN SEDIMENT BARRIER AS RECOMMENDED BY MANUFACTURER.
3. INSPECTION SHALL BE FREQUENT AND REPAIR OR REPLACEMENT SHALL BE MADE PROMPTLY AS NEEDED.
4. SEDIMENT BARRIER SHALL BE REMOVED WHEN IT HAS SERVED ITS USEFULNESS, SO AS NOT TO BLOCK OR IMPEDE STORM FLOW OR DRAINAGE.
5. SEDIMENT TRAPPED BY THIS PRACTICE SHALL BE DISPOSED OF IN AN APPROVED SITE IN A MANNER THAT WILL NOT CONTRIBUTE TO ADDITIONAL SILTATION.
6. ACCUMULATED SILT SHALL BE REMOVED WHEN IT REACHES A DEPTH RECOMMENDED BY MANUFACTURER AND DISPOSED OF IN AN APPROVED SPOIL SITE OR AS IN NO. 5 ABOVE.
7. AT EACH END OF SEDIMENT BARRIER, TURN SOCK UPSLOPE AND EXTEND UNTIL GROUND SURFACE RISES 18".

C - SEDIMENT BARRIER
NO SCALE

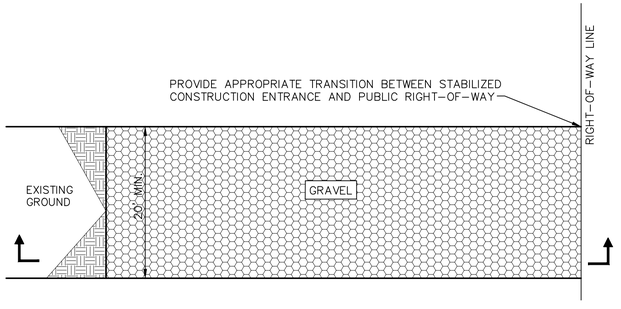

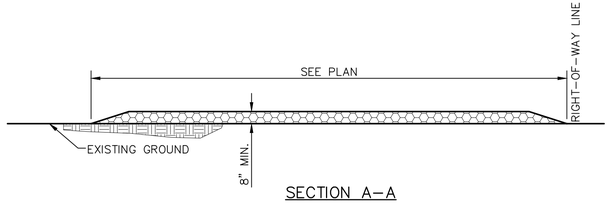

SECTION A–A

A - STABLIZIED CONSTRUCTION ENTRANCE
NO SCALE

STABILIZED CONSTRUCTION ENTRANCE NOTES:

1. CONSTRUCT STABILIZED CONSTRUCTION ENTRANCE AT ANY LOCATION WHERE ENTRANCE TO THE CONSTRUCTION SITE IS PERMITTED.
2. THE STONE SIZE SHALL CONSIST OF COARSE AGGREGATE IN ACCORDANCE WITH AASHTO M43 GRADATION 357. THE MATERIAL PLACED SHALL NOT BE LESS THAN THE WIDTH OF THE INGRESS OR EGRESS.
3. MAINTAIN THE ENTRANCE IN A CONDITION WHICH WILL PREVENT TRACKING OR FLOWING OF SEDIMENT ONTO PUBLIC RIGHTS–OF–WAY. THIS MAY REQUIRE PERIODIC TOP DRESSING WITH ADDITIONAL STONE AS CONDITIONS DEMAND AND REPAIR AND/OR CLEANOUT OF ANY MEASURES USED TO TRAP SEDIMENT. REMOVE ALL SEDIMENT SPILLED, DROPPED, WASHED OR TRACKED ONTO PUBLIC RIGHTS–OF–WAY.
4. WHEN NECESSARY, CLEAN WHEELS TO REMOVE SEDIMENT PRIOR TO ENTRANCE INTO PUBLIC RIGHT–OF–WAY. WHEN WASHING IS REQUIRED, IT SHALL BE DONE ON AN AREA STABILIZED WITH CRUSHED STONE WHICH DRAINS INTO AN APPROVED SEDIMENT TRAP OR SEDIMENT BASIN. PREVENT SEDIMENT FROM ENTERING ANY STORM DRAIN, DITCH, OR WATER COURSE THROUGH USE OF SAND BAGS, GRAVEL, BOARDS OR OTHER APPROVED METHODS.
5. NO SEPARATE PAYMENT WILL BE MADE FOR STABILIZED CONSTRUCTION ENTRANCE. THIS WORK SHALL BE CONSIDERED SUBSIDIARY TO OTHER ITEMS IN THE CONTRACT.

NOTES:

1. ACTUAL LAYOUT LOCATIONS & NUMBER OF WASH–OUTS TO BE DETERMINED BY CONTRACTOR IN FIELD.
2. THE CONCRETE WASH–OUT SIGN SHALL BE INSTALLED WITHIN 30 FT. OF THE TEMPORARY CONCRETE WASHOUT FACILITY.
3. WASH–OUTS SHALL BE LOCATED A MINIMUM OF 50 FT. FROM STORM DRAINS, OPEN DRAINAGE FACILITIES AND WATER COURSES. AVOID MIXING EXCESS AMOUNTS OF FRESH CONCRETE.
4. INSTALL BEFORE THE START OF ANY CONCRETE ACTIVITIES OR DELIVERIES.
5. INSPECT EVERY WEEK AND AFTER ½" STORM EVENT. REMOVE AND DISPOSE OF HARDENED CONCRETE AND RETURN THE FACILITY TO A FUNCTIONAL CONDITION. WASH–OUT FACILITIES MUST BE CLEANED, OR NEW FACILITIES MUST BE CONSTRUCTED AND READY FOR USE ONCE THE WASH–OUT IS 75% FULL.
6. WHEN TEMPORARY CONCRETE WASH–OUT FACILITIES ARE NO LONGER REQUIRED FOR THE WORK, THE HARDENED CONCRETE SHOULD BE REMOVED AND DISPOSED. MATERIALS USED TO CONSTRUCT TEMPORARY CONCRETE WASH–OUT FACILITIES SHALL BE REMOVED FROM THE SITE AND DISPOSED. HOLES, DEPRESSIONS OR OTHER GROUND DISTURBANCE CAUSED BY THE REMOVAL OF THE WASH–OUT SHALL BE BACKFILLED AND REPAIRED.

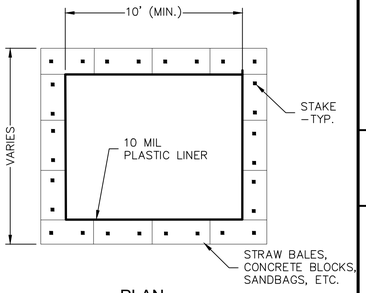

PLAN

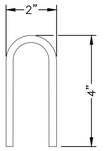

STAPLE

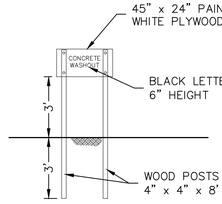

WASHOUT SIGN

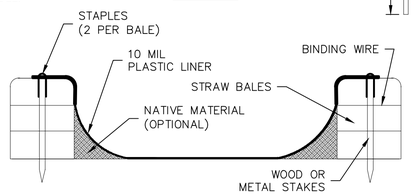

SECTION

B - CONCRETE WASH-OUT DETAIL
NO SCALE

BLACK & VEATCH
Black & Veatch Corporation
Kansas City, Missouri

olsson

THIS DOCUMENT WAS ORIGINALLY ISSUED AND SEALED ON JANUARY 24, 2023 BY MATTHEW K. LOOS, A LICENSED PROFESSIONAL ENGINEER IN THE STATE OF ARKANSAS, E-19979

BEAVER WATER DISTRICT

WESTERN CORRIDOR PUMP STATION

100% SET

REVISIONS AND RECORD OF ISSUE

DESIGNED:	RAC
DETAILED:	MVC
CHECKED:	RAC
APPROVED:	MKL
DATE:	JANUARY 24, 2023
PROJECT NO.:	405654

SITE

CIVIL

EROSION CONTROL DETAILS

C-01-504

(SCALE BAR IS 4" AT FULL SCALE) 0 1/2 1 2 3 4

PLOTTED: 1/23/2023 4:30:00 PM
FILE: C:\PW_WORKING\BVW_AMERICAS\D1129176\C-01-504.DWG
FDT1000
DT1000

COORDINATE TABLE				
POINT NO.	NORTHING	EASTING	ELEVATION	DESCRIPTION
300	N 698096.05	E 657768.53	CENTERLINE 1250.90	45-DEG BEND, 60" TW
301	N 698087.17	E 657996.28	CENTERLINE 1242.00	TIE-IN, 60" TW
302	N 698065.13	E 657787.08	CENTERLINE 1251.90	45-DEG BEND,60" TW
303	N 698064.98	E 657791.04	CENTERLINE 1251.90	TIE-IN, 60" TW
310	N 698056.40	E 657614.35	CENTERLINE 1257.60	45-DEG BEND, 48" FW SPRINGDALE
311	N 698028.06	E 657614.56	CENTERLINE 1257.19	TIE-IN, 48" FW SPRINGDALE
312	N 698032.06	E 657614.53	CENTERLINE 1257.00	48" TEE, 48" FW SPRINGDALE
315	N 698196.40	E 657505.48	CENTERLINE 1248.50	45-DEG BEND, 48" FW FAYETTEVILLE
316	N 698184.74	E 657505.56	CENTERLINE 1248.50	45-DEG BEND, 48" FW FAYETTEVILLE
317	N 698127.29	E 657563.87	CENTERLINE 1250.50	45-DEG BEND, 48" FW FAYETTEVILLE
318	N 698029.91	E 657564.58	CENTERLINE 1263.31	TIE-IN, 48" FW FAYETTEVILLE
319	N 698033.91	E 657564.55	CENTERLINE 1262.73	48" TEE, 48" FW FAYETTEVILLE
320	N 698323.11	E 657619.76	CENTERLINE 1251.12	45-DEG BEND, 48" FW BENTONVILLE
321	N 698330.13	E 657619.70	CENTERLINE 1251.12	45-DEG BEND, 48" FW BENTONVILLE
322	N 698470.65	E 657477.11	CENTERLINE 1241.75	TIE-IN, 48" FW BENTONVILLE
325	N 698144.25	E 657760.96	CENTERLINE 1250.16	45-DEG BEND, 36" FW ROGERS
326	N 698144.60	E 657808.98	CENTERLINE 1250.00	45-DEG BEND, 36" FW ROGERS
327	N 698312.65	E 657974.59	CENTERLINE 1232.43	TIE-IN, 36" FW ROGERS
330	N 698147.98	E 657765.54	CENTERLINE 1253.80	TIE-IN, 8" PRIVATE FIRE MAIN
331	N 698126.72	E 657787.11	CENTERLINE 1253.61	45-DEG BEND, 8" PRIVATE FIRE MAIN
332	N 698114.59	E 658113.16	CENTERLINE 1240.01	TIE-IN, 8" PRIVATE FIRE MAIN
333	N 698113.88	E 658132.46	CENTERLINE 1240.48	TIE-IN, 8" PRIVATE FIRE MAIN
334	N 698110.66	E 658219.05	CENTERLINE FIELD VERIFY	TIE-IN, 8" PRIVATE FIRE MAIN
335	N 698077.94	E 657696.52	CENTERLINE 1253.25	45-DEG BEND, 8" PRIVATE FIRE MAIN
336	N 698077.94	E 657663.60	CENTERLINE 1253.25	TIE-IN, 8" PRIVATE FIRE MAIN
337	N 698077.94	E 657630.67	CENTERLINE 1252.75	45-DEG BEND, 8" PRIVATE FIRE MAIN
338	N 698214.15	E 657494.46	CENTERLINE 1251.25	45-DEG BEND, 8" PRIVATE FIRE MAIN
339	N 698234.51	E 657494.46	CENTERLINE 1252.25	TIE-IN, 8" PRIVATE FIRE MAIN
340	N 698244.53	E 657494.46	CENTERLINE 1252.33	PLUG, 8" PRIVATE FIRE MAIN
341	N 698287.44	E 657766.54	CENTERLINE 1252.25	45-DEG BEND, 8" PRIVATE FIRE MAIN
342	N 698325.97	E 657727.44	CENTERLINE 1250.33	TIE-IN, 8" PRIVATE FIRE MAIN
343	N 698329.94	E 657723.41	CENTERLINE 1250.25	PLUG, 8" PRIVATE FIRE MAIN
345	N 698118.56	E 657791.11	CENTERLINE FIELD VERIFY	TIE-IN, 2" WATER SERVICE
346	N 698102.66	E 658218.75	CENTERLINE FIELD VERIFY	TIE-IN, 2" WATER SERVICE
350	N 698258.84	E 658143.03	CENTERLINE FIELD VERIFY	TIE-IN, 4" NATURAL GAS
351	N 698270.03	E 657841.84	CENTERLINE 1248.97	45-DEG BEND, 4" NATURAL GAS
352	N 698357,12	E 657753.47	CENTERLINE 1248.93	45-DEG BEND, 4" NATURAL GAS
353	N 698356.07	E 657609.51	CENTERLINE 1250.45	45-DEG BEND, 4" NATURAL GAS
354	N 698418.79	E 657545.86	CENTERLINE 1250.45	45-DEG BEND, 4" NATURAL GAS
355	N 698418.53	E 657510.42	CENTERLINE 1255.87	45-DEG BEND, 4" NATURAL GAS
356	N 698416.46	E 657508.39	CENTERLINE 1255.87	TIE-IN, 4" NATURAL GAS
357	N 698399.32	E 657491.59	CENTERLINE 1255.80	TIE-IN, 4" NATURAL GAS
358	N 698331.24	E 657424.86	CENTERLINE 1255.26	TIE-IN, 4" NATURAL GAS
364	N 698217.72	E 657745.39	INVERT 1254.19	TIE-IN, 8" ROOF DRAIN
365	N 698318.33	E 657643.30	INVERT 1254.19	TIE-IN, 8" ROOF DRAIN
366	N 698318.80	E 657598.95	INVERT 1254.19	TIE-IN, 12" ROOF DRAIN
367	N 698255.94	E 657537.01	INVERT 1254.19	TIE-IN, 12" ROOF DRAIN
368	N 698211.61	E 657538.13	INVERT 1254.19	TIE-IN, 8" ROOF DRAIN
369	N 698111.00	E 657640.22	INVERT 1254.19	TIE-IN, 8" ROOF DRAIN
370	N 698095.09	E 657659.64	INVERT 1254.19	45-DEG BEND, 6" ROOF DRAIN
371	N 698095.06	E 657656.39	INVERT 1254.17	45-DEG BEND, 6" ROOF DRAIN
372	N 698232.42	E 657517.01	INVERT 1252.68	45-DEG BEND, 12" ROOF DRAIN
373	N 698235.64	E 657517.01	INVERT 1252.66	45-DEG BEND, 12" ROOF DRAIN
374	N 698339.09	E 657618.96	INVERT 1252.66	45-DEG BEND, 12" ROOF DRAIN
375	N 698339.14	E 657622.18	INVERT 1252.68	45-DEG BEND, 12" ROOF DRAIN

COORDINATE TABLE				
POINT NO.	NORTHING	EASTING	ELEVATION	DESCRIPTION
376	N 698201.78	E 657761.56	INVERT 1254.17	45-DEG BEND, 6" ROOF DRAIN
377	N 698198.53	E 657761.58	INVERT 1254.19	45-DEG BEND, 8" ROOF DRAIN
378	N 698210.68	E 657752.53	INVERT 1254.18	TIE-IN, 12" ROOF DRAIN
379	N 698294.88	E 657575.38	INVERT 1252.33	TIE-IN, 12", ROOF DRAIN
380	N 698332.27	E 657533.63	INVERT 1253.22	45-DEG BEND, 8" ROOF DRAIN
381	N 698332.27	E 657526.67	INVERT 1253.36	45-DEG BEND, 8" ROOF DRAIN
382	N 698342.76	E 657515.97	INVERT 1253.67	TIE-IN, 8" ROOF DRAIN
383	N 698320.44	E 657494.09	INVERT 1254.33	90-DEG BEND, 6" ROOF DRAIN
384	N 698351.82	E 657462.07	INVERT 1255.25	TIE-IN, 6" ROOF DRAIN
385	N 698374.14	E 657483.95	INVERT 1254.57	TIE-IN, 6" ROOF DRAIN
390	N 698338.22	E 657628.59	INVERT 1248.67	90-DEG BEND, 6" SANITARY DRAIN
391	N 698310.10	E 657659.23	INVERT 1242.92	TIE-IN, 6" SANITARY DRAIN
392	N 698252.32	E 657716.69	INVERT 1254.29	90-DEG BEND, 6" SANITARY DRAIN
393	N 698301.14	E 657667.15	INVERT 1250.65	TIE-IN, 6" SANITARY DRAIN
394	N 698310.21	E 657659.35	INVERT 1242.89	TIE-IN, 6" SANITARY DRAIN
400	N 698220.14	E 657438.45	1253.25	TOC
401	N 698220.24	E 657452.59	1253.25	TOC
402	N 698321.18	E 657538.01	1257.38	TOC
403	N 698321.28	E 657552.16	1257.38	TOC

COORDINATE TABLE				
POINT NO.	NORTHING	EASTING	ELEVATION	DESCRIPTION
100	N 698317.11	E 657599.76	1258.48	BLDG/TP
101	N 698286.36	E 657631.34	1258.50	BLDG/TP
102	N 698307.36	E 657651.92	1258.48	BLDG/TP
103	N 698272.04	E 657687.76	1258.39	BLDG/GR
104	N 698265.39	E 657681.21	1258.48	BLDG/GR
105	N 698254.85	E 657691.91	1258.48	BLDG/GR
106	N 698261.50	E 657698.46	1258.39	BLDG/GR
107	N 698226.42	E 657734.43	1257.69	BLDG/GR
108	N 698205.29	E 657713.60	1258.50	BLDG/GR
109	N 698174.17	E 657744.81	1258.00	BLDG/GR
110	N 698112.22	E 657683.76	1258.48	BLDG/TP
111	N 698134.68	E 657660.97	1258.48	BLDG/TP
112	N 698113.55	E 657640.14	1258.48	BLDG/TP
113	N 698211.57	E 657540.68	1258.48	BLDG/TP
114	N 698232.70	E 657561.50	1258.48	BLDG/TP
115	N 698255.16	E 657538.71	1258.48	BLDG/TP
116	N 698342.91	E 657514.01	1258.48	BLDG/TP
117	N 698322.73	E 657494.24	1258.48	BLDG/TP
118	N 698355.21	E 657465.39	1258.48	BLDG/TP
119	N 698354.27	E 657466.34	1258.48	BLDG/TP
200	N 698240.36	E 658131.36	1242.86	TP/ME
201	N 698216.38	E 658130.39	1242.80	TP
202	N 698243.55	E 658045.35	1244.58	TP/ME
203	N 698219.57	E 658044.46	1244.52	TP
204	N 698241.42	E 657995.24	1245.58	TP/HP
205	N 698221.43	E 657994.49	1245.52	TP/HP
206	N 698247.50	E 657831.62	1256.90	TP/LP
207	N 698227.51	E 657830.88	1257.28	TP
208	N 698228.13	E 657814.29	1256.97	TP/HP
209	N 698248.17	E 657813.66	1256.55	TP
210	N 698262.52	E 657780.43	1255.82	TP
211	N 698325.55	E 657780.75	1255.04	TP
212	N 698349.08	E 657692.59	1256.75	TP
213	N 698360.18	E 657639.50	1257.28	TP
214	N 698351.91	E 657614.46	1257.54	TP
215	N 698358.97	E 657584.05	1257.89	TP
216	N 698384.83	E 657557.67	1258.05	TP
217	N 698428.46	E 657513.15	1257.76	TP
218	N 698428.32	E 657499.01	1257.96	TP
219	N 698372.31	E 657484.01	1258.48	TP
220	N 698392.26	E 657463.66	1258.34	TP
221	N 698353.06	E 657463.29	1258.48	GR
222	N 698373.63	E 657445.40	1257.95	GR
223	N 698360.06	E 657432.10	1257.76	GR
224	N 698404.12	E 657451.75	1257.18	GR
225	N 698365.28	E 657413.48	1257.09	TP
226	N 698308.47	E 657484.46	1258.13	TP
227	N 698300.08	E 657492.97	1258.01	TP
230	N 698341.62	E 657515.32	1258.42	TP
231	N 698341.02	E 657451.42	1257.90	TP
235	N 698321.23	E 657545.08	1257.35	TI
236	N 698282.25	E 657501.71	1258.01	TP
237	N 698277.76	E 657502.24	1258.05	TP
238	N 698270.17	E 657553.51	1258.48	TP
239	N 698229.19	E 657508.01	1257.36	TP
240	N 698137.26	E 657708.44	1258.50	TP
242	N 698208.03	E 657510.52	1257.47	TP
243	N 698190.20	E 657519.25	1257.67	TP
244	N 698091.81	E 657619.09	1257.67	TP
245	N 698139.29	E 657738.89	1258.05	TP
246	N 698083.19	E 657639.23	1257.67	TP
247	N 698081.86	E 657682.85	1257.89	TP

COORDINATE TABLE				
POINT NO.	NORTHING	EASTING	ELEVATION	DESCRIPTION
248	N 698105.48	E 657660.36	1258.20	TP
249	N 698147.99	E 657719.38	1258.50	TP
250	N 698126.94	E 657740.75	1258.13	TP
251	N 698116.96	E 657730.92	1258.15	TP
252	N 698090.79	E 657705.13	1258.02	TP
253	N 698160.21	E 657745.46	1257.84	TP
254	N 698159.90	E 657759.20	1257.47	TP
255	N 698153.11	E 657766.55	1257.62	TP
256	N 698166.78	E 657774.26	1257.36	TP
257	N 698171.82	E 657764.84	1257.20	TP
258	N 698185.13	E 657753.84	1257.23	TP
259	N 698205.54	E 657784.10	1256.56	TP
260	N 698231.27	E 657747.85	1256.70	TP
261	N 698237.10	E 657744.95	1256.72	TP
262	N 698242.46	E 657718.15	1258.00	GR
263	N 698249.58	E 657725.17	1257.30	TW
264	N 698253.14	E 657728.68	1257.25	TP/TW
265	N 698266.67	E 657742.02	1257.10	TP
266	N 698279.31	E 657729.20	1257.91	TP
267	N 698265.78	E 657715.86	1258.09	TP/TW
268	N 698262.21	E 657712.35	1258.15	TW
269	N 698271.97	E 657702.45	1258.28	TW
270	N 698275.60	E 657705.89	1258.23	TP/TW
271	N 698277.01	E 657704.46	1258.21	TP/TW
272	N 698290.54	E 657717.80	1258.07	TP
273	N 698276.18	E 657698.17	1258.23	TP/TW
274	N 698276.18	E 657698.17	1258.23	TW
275	N 698265.79	E 657687.93	1258.42	TW
276	N 698261.58	E 657692.20	1258.43	TW
277	N 698258.02	E 657688.70	1258.48	TW
278	N 698262.23	E 657684.42	1258.48	TW
279	N 698298.71	E 657675.31	1257.90	TW
280	N 698302.27	E 657678.82	1257.85	TP/TW
281	N 698315.81	E 657692.16	1257.66	TP
282	N 698311.15	E 657669.81	1257.60	TP
283	N 698311.10	E 657655.62	1258.37	TP
284	N 698296.79	E 657641.51	1258.48	TP
286	N 698307.63	E 657734.65	1257.59	TP
287	N 698341.02	E 657413.45	1257.34	GR
288	N 698305.32	E 657378.45	1257.34	GR
289	N 698291.17	E 657378.59	1257.49	GR
290	N 698246.73	E 657423.94	1258.13	GR
291	N 698167.25	E 657750.62	1257.64	TP
292	N 698202.47	E 657716.09	1258.48	TW
293	N 698198.73	E 657719.89	1258.48	TW
294	N 698202.29	E 657723.40	1258.40	TW
295	N 698206.03	E 657719.60	1258.40	TW
296	N 698227.59	E 657748.33	1256.70	TW
297	N 698233.95	E 657747.11	1256.70	TW
298	N 698311.70	E 657594.43	1258.48	TP
299	N 698228.37	E 657557.24	1258.48	TP
300	N 698204.26	E 657533.48	1258.27	TP
301	N 698164.19	E 657588.75	1258.48	TP
302	N 698160.45	E 657592.55	1258.48	TP
303	N 698156.89	E 657581.55	1258.37	TP
304	N 698153.14	E 657585.35	1258.37	TP
305	N 698106.24	E 657632.94	1258.27	TP
306	N 698130.52	E 657656.87	1258.48	TP
307	N 698122.08	E 657673.75	1258.48	TP
308	N 698105.01	E 657691.07	1258.38	TP
309	N 698131.00	E 657716.68	1258.40	TP
310	N 698140.97	E 657726.50	1258.45	TP

ABBREVIATIONS:

BLDG	BUILDING
TP	TOP OF PAVEMENT
TW	TOP OF SIDEWALK
GR	FINISHED GROUND
TI	TOP OF INLET
FL	OPEN CHANNEL FLOWLINE
ME	MATCH EXISTING
LP	LOW POINT
HP	HIGH POINT

(SCALE BAR IS 4" AT FULL SCALE) 0 1/2 1 2 3 4

PLOTTED: 1/23/2023 4:28:24 PM
FILE: C:\PW_WORKING\BVW_AMERICAS\D1129176\C-01-601.DWG
FDT1000
FDT1005

BLACK & VEATCH
Black & Veatch Corporation
Kansas City, Missouri

olsson

THIS DOCUMENT WAS ORIGINALLY ISSUED AND SEALED ON JANUARY 24, 2023 BY MATTHEW K. LOOS, A LICENSED PROFESSIONAL ENGINEER IN THE STATE OF ARKANSAS, E-19979

BEAVER WATER DISTRICT

WESTERN CORRIDOR PUMP STATION

100% SET

REVISIONS AND RECORD OF ISSUE

DESIGNED:	CJK
DETAILED:	NGH
CHECKED:	JCH
APPROVED:	AJH
DATE:	JANUARY 24, 2023
PROJECT NO.:	405654

SITE

CIVIL

COORDINATE TABLES

C-01-601

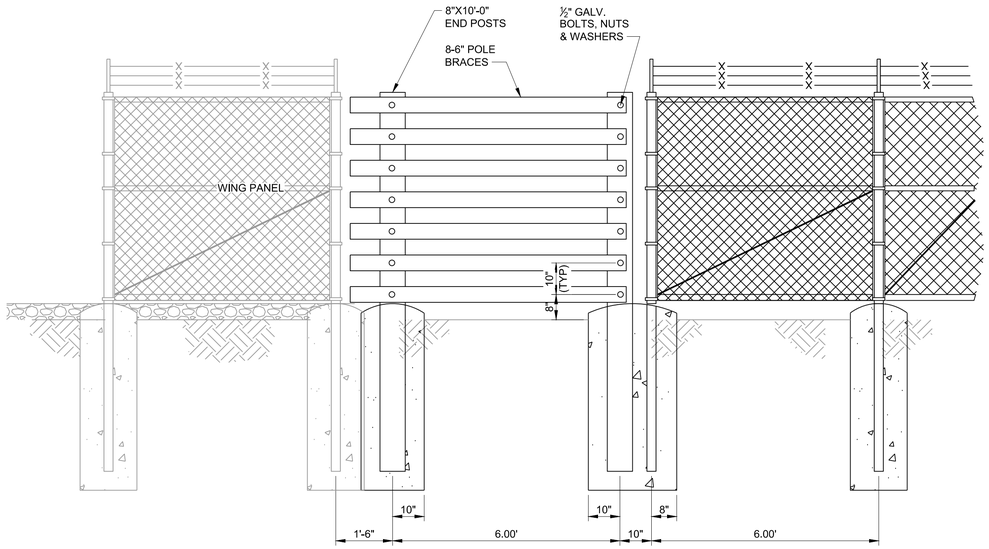

A SECURITY FENCE TO SECURITY FENCE DETAIL
NO SCALE

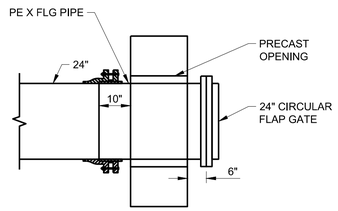

NOTES:

1. WALL PIPE MATERIAL SHALL BE DUCTILE IRON.
2. WALL PIPE SHALL BE ORIENTED SO THAT THE BOLT HOLES STRADDLE THE TOP CENTERLINE.

C FLAP GATE DETAIL
NO SCALE

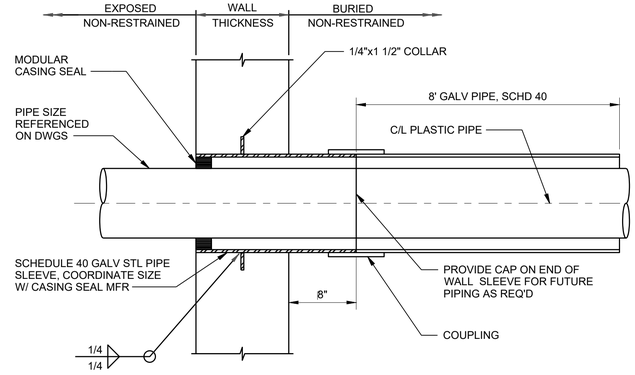

FOR PIPE DIAMETER 6 INCH AND SMALLER

NOTES:

1. WALL SLEEVE, SCHEDULE 40 STEEL PIPE FOR 12" AND SMALLER SLEEVES, 1/4" STEEL PIPE FOR SLEEVES LARGER THAN 12", AND HOT DIP GALVANIZED AFTER FABRICATION, 304 SS, OR OTHER MATERIAL AS SPECIFIED OR INDICATED ON DRAWINGS. COORDINATE WALL SLEEVE DIAMETER WITH MODULAR CASING SEAL MANUFACTURER.
2. FOR BURIED PVC PIPING, CONTRACTOR SHALL PROVIDE AN ADDITIONAL FIELD JOINT AS CLOSE AS PRACTICAL TO FACE OF WALL, BUT NOT CLOSER THAN 5 FEET.

D EXTERIOR WALL SLEEVE FOR PLASTIC PIPE
NO SCALE

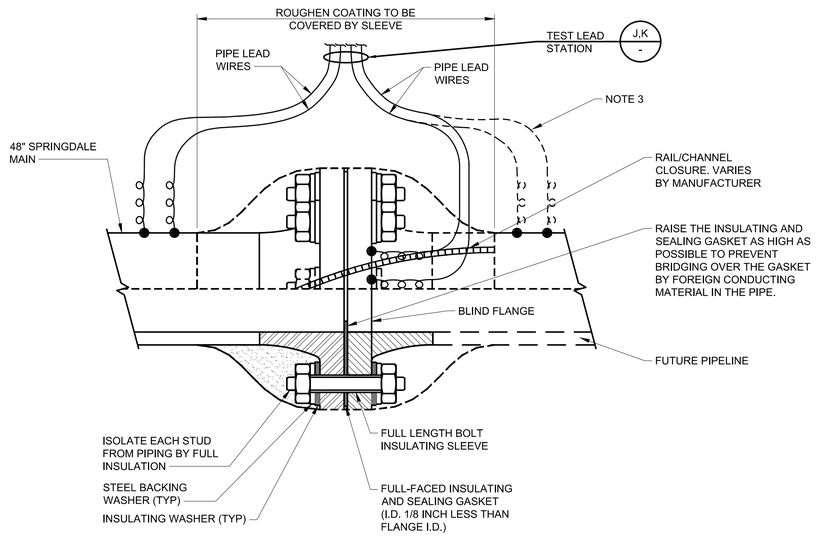

NOTES:

1. WIRE COLORS: ELECTRODE UPSTREAM OF JOINT SHALL BE BLUE. DOWNSTREAM SHALL BE WHITE AND ALL REFERENCE ELECTRODES SHALL BE YELLOW IN COLOR.
2. CONTRACTOR TO INSTALL INSULATED FLANGE JOINT AND BLIND FLANGE.
3. PIPELINE CONTRACTOR TO REMOVE BLIND FLANGE AND MAKE CONNECTION TO EXISTING DISCHARGE. PIPELINE CONTRACTOR TO REUSE INSULATING FLANGE KIT AND TEST STATION.

B FINISHED WATER TIE-IN DETAIL
NO SCALE

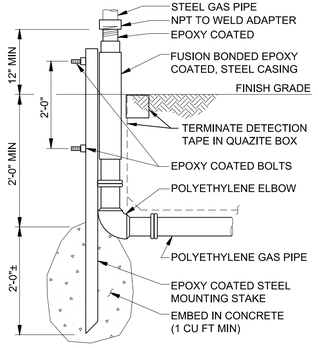

NOTE:
1. TYPICAL 3 PLCS; LOCATED AT CONNECTION WITH ATMOS ENERGY GAS MAIN AND AT EACH GENERATOR ENCLOSURE.

E FUEL GAS TRANSITION FITTING
NO SCALE

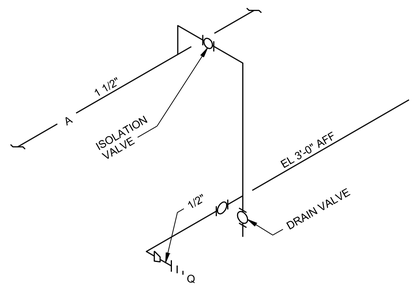

F TYPICAL SERVICE AIR OUTLET PIPING
NO SCALE

BLACK & VEATCH
Black & Veatch Corporation
Kansas City, Missouri

olsson

THIS DOCUMENT WAS ORIGINALLY ISSUED AND SEALED ON JANUARY 24, 2023 BY ANDREW J. HANSEN, A LICENSED PROFESSIONAL ENGINEER IN THE STATE OF ARKANSAS, E-14664

BEAVER WATER DISTRICT

WESTERN CORRIDOR PUMP STATION

100% SET

REVISIONS AND RECORD OF ISSUE

DESIGNED:	CJK
DETAILED:	NGH
CHECKED:	JCH
APPROVED:	AJH
DATE: JANUARY 24, 2023	
PROJECT NO.:	405654

SITE

CIVIL

MISCELLANEOUS DETAILS

C-99-501

PLOTTED: 1/20/2023 9:25:06 AM
FILE: C:\PW_WORKING\BVW_AMERICAS\D1129176\C-99-501.DWG
EDITOR: D1129

(SCALE BAR IS 4" AT FULL SCALE) 0 1/2 1 2 3 4

GENERAL ARCHITECTURAL NOTES

1. PERSPECTIVE VIEWS ARE FOR GENERAL REFERENCE ONLY.
2. SEE BUILDING ELEVATIONS FOR MATERIAL KEYNOTES.
3. SEE STRUCTURAL DRAWINGS FOR EQUIPMENT PADS AND CIVIL DRAWINGS FOR SIDEWALKS, CURBS & DRIVEWAYS.
4. SEE ARCHITECTURAL DRAWINGS FOR LOUVER LOCATIONS & SCHEDULED SIZES AND RESTROOM PLUMBING FIXTURE PLAN LOCATIONS.
6. SEE HVAC DRAWINGS FOR VENTILATION EQUIPMENT & DUCTWORK.
7. SEE MECHANICAL DRAWINGS FOR PROCESS PIPING.
8. FOR EXTERIOR LIGHT FIXTURES SEE ELECTRICAL DRAWINGS.

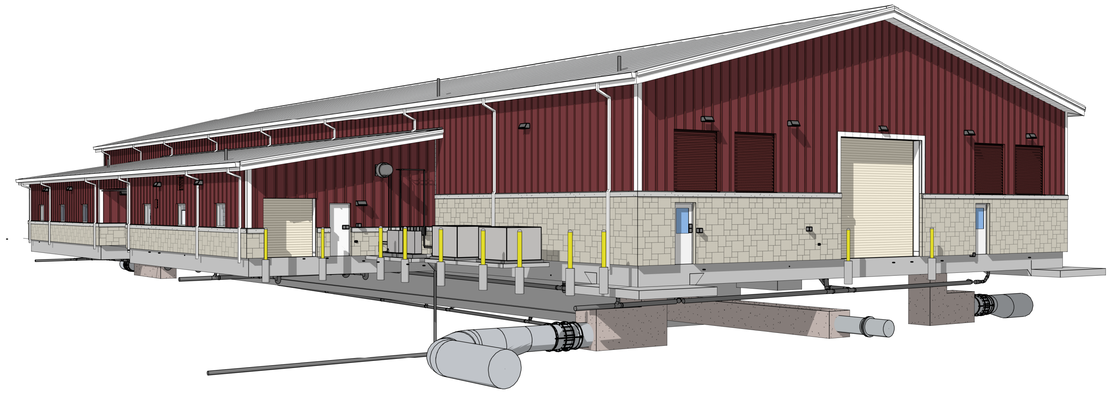

NORTHWEST PERSPECTIVE

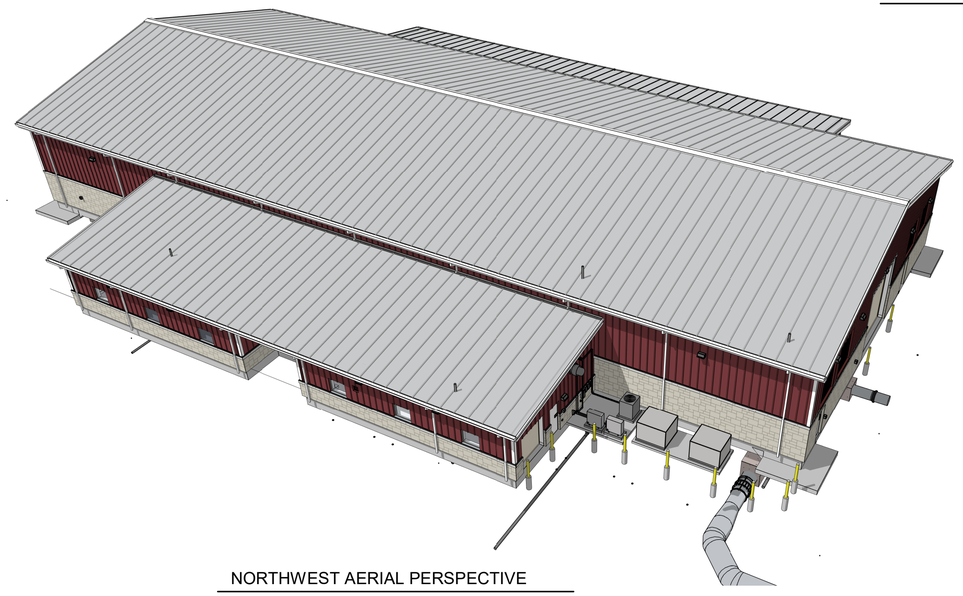

NORTHWEST AERIAL PERSPECTIVE

ENTRANCE PERSPECTIVE

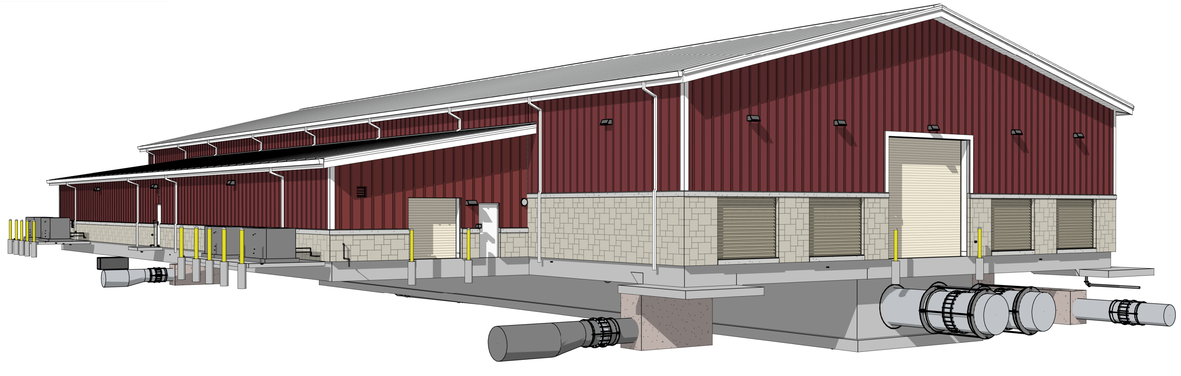

SOUTHEAST PERSPECTIVE

Black & Veatch Architects Arkansas, PLLC
Overland Park, Kansas
COA: LL209

olsson

THIS DOCUMENT WAS ORIGINALLY ISSUED AND SEALED ON JANUARY 24, 2023 BY RICHARD A. BARTHOLOMEW, A LICENSED PROFESSIONAL ARCHITECT IN THE STATE OF ARKANSAS, A-8861

BEAVER WATER DISTRICT

WESTERN CORRIDOR PUMP STATION

100% SET

REVISIONS AND RECORD OF ISSUE

DESIGNED:	RAB
DETAILED:	DAY
CHECKED:	DRH
APPROVED:	RAB
DATE:	JANUARY 24, 2023
PROJECT NO.:	405654

PUMP STATION

ARCHITECTURAL

PERSPECTIVES

A-42-101

OF 159

(SCALE BAR IS 4" AT FULL SCALE) 0 1/2 1 2 3 4

PLOTTED: 1/20/2023 2:43:19 PM
FILE: BIM 360://405654 - BWD Western Corridor Pump Station/405654-42-PUMP STATION.rvt
D11000

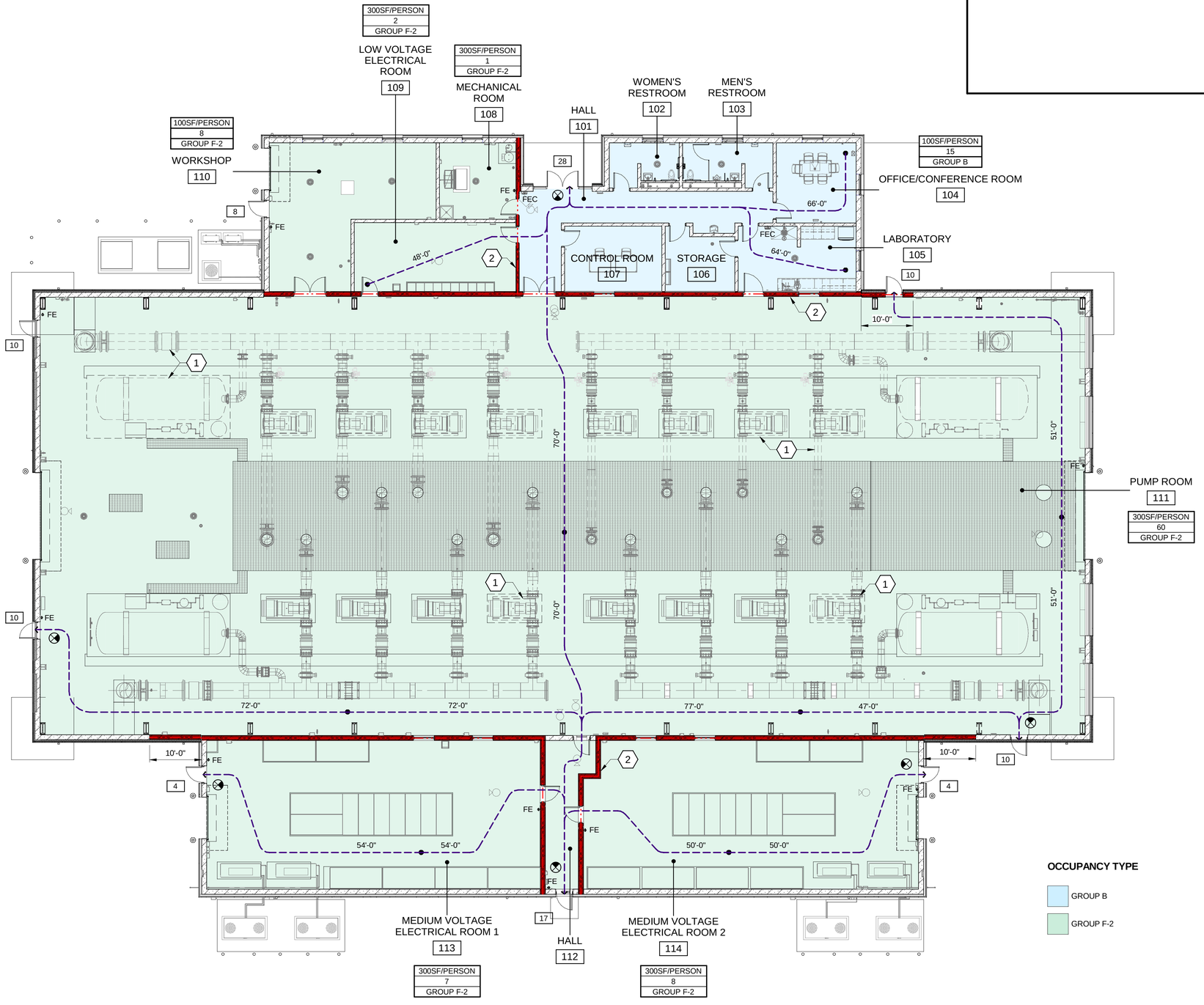

OPERATING LEVEL - LIFE SAFETY PLAN

3/32" = 1'-0"

GENERAL SHEET NOTES

1. FUTURE PROCESS MECHANICAL IS REPRESENTED WITH HALF-TONE DASHED LINEWORK.

BUILDING CODE ANALYSIS

APPLICABLE BUILDING CODES:
2021 INTERNATIONAL BUILDING CODE
2014 ARKANSAS ENERGY CODE
2021 ARKANSAS FIRE PROTECTION CODE
2003 LIFE SAFETY CODE

BUILDING NAME	OPERATIONS & PUMP STATION
TYPE OF CONSTRUCTION	TYPE II-B
OCCUPANCY	MIXED USE: B, F-2 & S-1
ACTUAL FLOOR AREA	25,160 SF TOTAL
ALLOWABLE AREA	26,910 SF PER IBC TABLE 506.3.3 FRONTAGE INCREASE FACTOR
ACTUAL HEIGHT	1 STORY (32.5 FT)
ALLOWABLE HEIGHT	3 STORIES (55 FT)
DESIGN OCCUPANT LOAD	100 PERSONS
EXITS PROVIDED	6 EXITS
EXITS REQUIRED	6 EXITS
MAXIMUM COMMON PATH OF EGRESS TRAVEL	F-2 = 75 FT (W/O SPRINKLER SYSTEM)
MAXIMUM EXIT ACCESS TRAVEL DISTANCE	F-2 = 200 FT (W/O SPRINKLER SYSTEM)
ADA ACCESSIBILITY	YES (ADMINISTRATION AREA ONLY) NOT REQ'D FOR F-2 OCCUPANCY TYPES PER IBC SECTION 1103.2.9 EQUIPMENT SPACES
FIRE SPRINKLERS	NO
OCCUPANCY SEPARATION	2 HOUR SEPARATION BETWEEN F-2 AND B OCCUPANCIES, 2 HOUR SEPARATION BETWEEN ELECTRICAL ROOMS 114 & 115 AND HALL 112

SHEET KEYNOTES

1. FUTURE PROCESS PIPING & EQUIPMENT, TYPICAL. SEE GENERAL SHEET NOTE 1.
2. 2 HOUR FIRE RATED BARRIER, TYPICAL.

LIFE SAFETY LEGEND

- FE — FIRE EXTINGUISHER (FE)
- FEC — SURFACE MOUNTED FIRE EXTINGUISHER CABINET (FEC)
- X'-X" — EXIT ACCESS TRAVEL DISTANCE
- 100SF/PERSON / 0 / GROUP X-0 — OCCUPANTS PER SF, OCCUPANT LOAD, OCCUPANCY CLASSIFICATION
- 1 — CUMULATIVE OCCUPANT LOAD AT EXIT
- EXIT SYMBOL
- 2 HOUR FIRE BARRIER

PLAN NORTH

SITE NORTH

12' 8' 4' 0' 10' 20'

3/32" = 1'-0"

(SCALE BAR IS 4" AT FULL SCALE) 0 1/2 1 2 3 4

Black & Veatch Architects Arkansas, PLLC
Overland Park, Kansas
COA: LL209

olsson

THIS DOCUMENT WAS ORIGINALLY ISSUED AND SEALED ON JANUARY 24, 2023 BY RICHARD A. BARTHOLOMEW, A LICENSED PROFESSIONAL ARCHITECT IN THE STATE OF ARKANSAS, A-8861

BEAVER WATER DISTRICT

WESTERN CORRIDOR PUMP STATION

100% SET

REVISIONS AND RECORD OF ISSUE

DESIGNED:	RAB, RNP
DETAILED:	DAY
CHECKED:	DRH
APPROVED:	RAB
DATE:	JANUARY 24, 2023
PROJECT NO.:	405654

PUMP STATION

ARCHITECTURAL

LIFE SAFETY PLAN & CODE ANALYSIS

A-42-102

OF 159

PLOTTED: 1/20/2023 7:31:21 AM
FILE: BIM 360://405654 - BWD Western Corridor Pump Station/405654-42-PUMP STATION.rvt
D11000

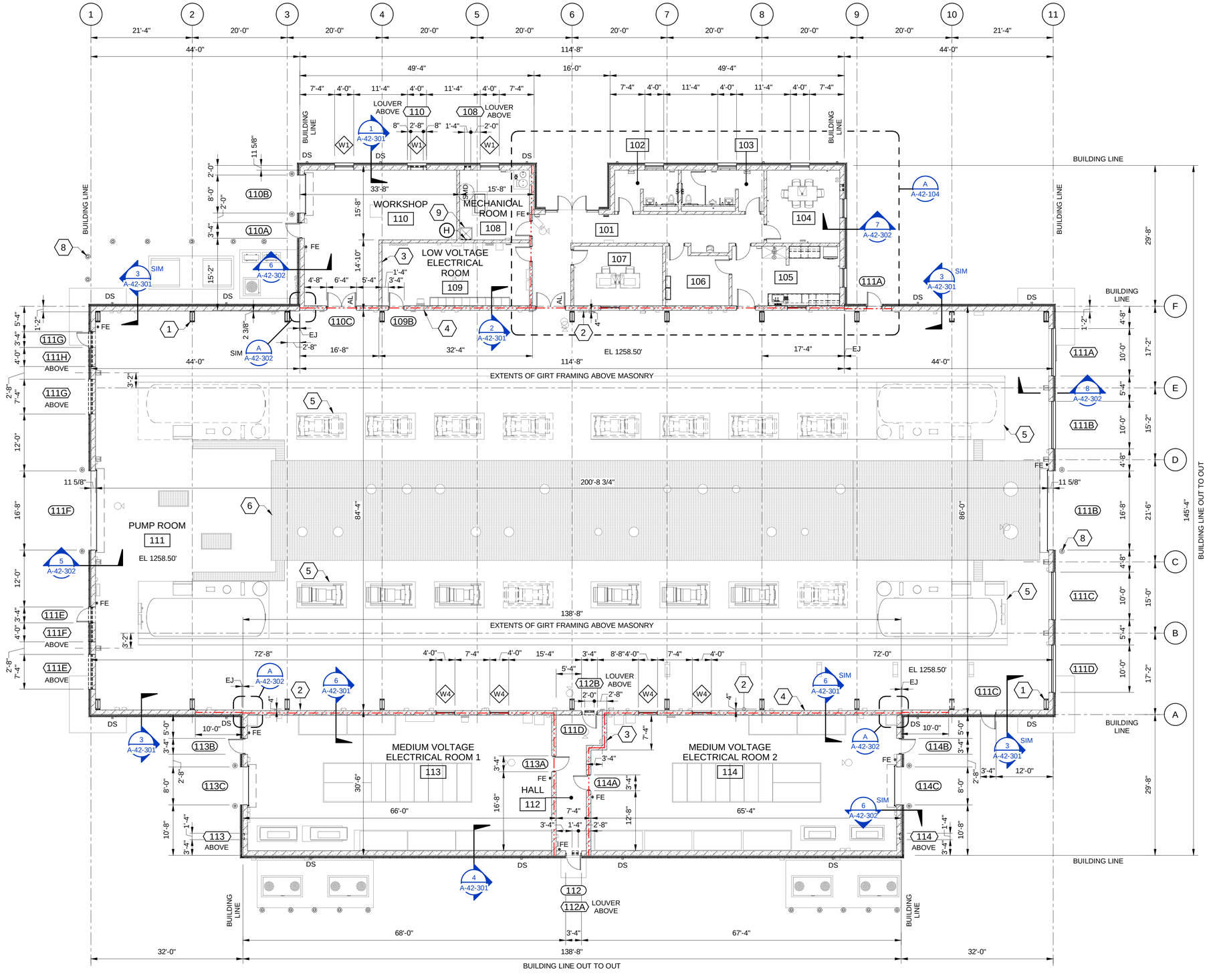

OPERATING LEVEL - ARCHITECTURAL FLOOR PLAN

3/32" = 1'-0"

GENERAL SHEET NOTES

1. BUILDING LINES (BL) ARE TO EXTERIOR FACE OF CONCRETE MASONRY (CMU) & OUTSIDE EDGE OF CONCRETE SLAB UNLESS NOTED OTHERWISE ON PLAN.
2. WALL DIMENSIONS ARE TO MASONRY FACE UNLESS NOTED OTHERWISE ON PLAN.
3. PRE-ENGINEERED METAL BUILDING (PEMB) MANUFACTURER TO DETERMINE COLUMN OFFSET FROM INTERIOR FACE OF MASONRY WALL.
4. COLUMN GRIDS 1 & 11 AND A & F ARE OFFSET PER PEMB MANUFACTURER.
5. FOR DOWNSPOUT (DS) LOCATIONS, SEE BUILDING ELEVATIONS.

SHEET KEYNOTES

1. PRE-ENGINEERED METAL BUILDING FRAME, TYPICAL.
2. 4" CLEAR BETWEEN FACE OF CMU AND FLANGE FACE.
3. 8 INCH CONCRETE MASONRY UNIT (CMU), TYPICAL.
4. 12 INCH CONCRETE MASONRY UNIT, TYPICAL.
5. EQUIPMENT PADS, TYPICAL. SEE STRUCTURAL DRAWINGS.
6. METAL GRATING, SEE STRUCTURAL DRAWINGS.
7. NOT USED.
8. BOLLARD, TYPICAL, SEE CIVIL DRAWINGS.
9. MOP SINK, SEE PLUMBING DRAWINGS. SEE ACCESSORY SCHEDULE FOR MOP HOLDER.
10. FIRE-RATED EXPANSION JOINT.

ARCHITECTURAL SYMBOL LEGEND

- X — ACCESSORY ITEM
- 101A — DOOR
- 101A — LOUVER
- 00 — LABORATORY CABINET
- ROOM NAME 101 — ROOM NAME & NUMBER
- W — WINDOW, WINDOW SYSTEM or FRAME TYPE
- X — INTERIOR ELEVATION
- 2 HOUR FIRE BARRIER

PLAN NORTH / SITE NORTH

3/32" = 1'-0"

(SCALE BAR IS 4" AT FULL SCALE) 0 1/2 1 2 3 4

Black & Veatch Architects Arkansas, PLLC
Overland Park, Kansas
COA: LL209

olsson

THIS DOCUMENT WAS ORIGINALLY ISSUED AND SEALED ON JANUARY 24, 2023 BY RICHARD A. BARTHOLOMEW, A LICENSED PROFESSIONAL ARCHITECT IN THE STATE OF ARKANSAS, A-8861

BEAVER WATER DISTRICT

WESTERN CORRIDOR PUMP STATION

100% SET

REVISIONS AND RECORD OF ISSUE

DESIGNED:	RAB
DETAILED:	DAY
CHECKED:	DRH
APPROVED:	RAB
DATE:	JANUARY 24, 2023
PROJECT NO.:	405654

PUMP STATION

ARCHITECTURAL

OVERALL FLOOR PLAN

A-42-103

OF 159

PLOTTED: 1/20/2023 7:32:57 AM
FILE: BIM 360://405654 - BWD Western Corridor Pump Station/405654-42-PUMP STATION.rvt
D11000

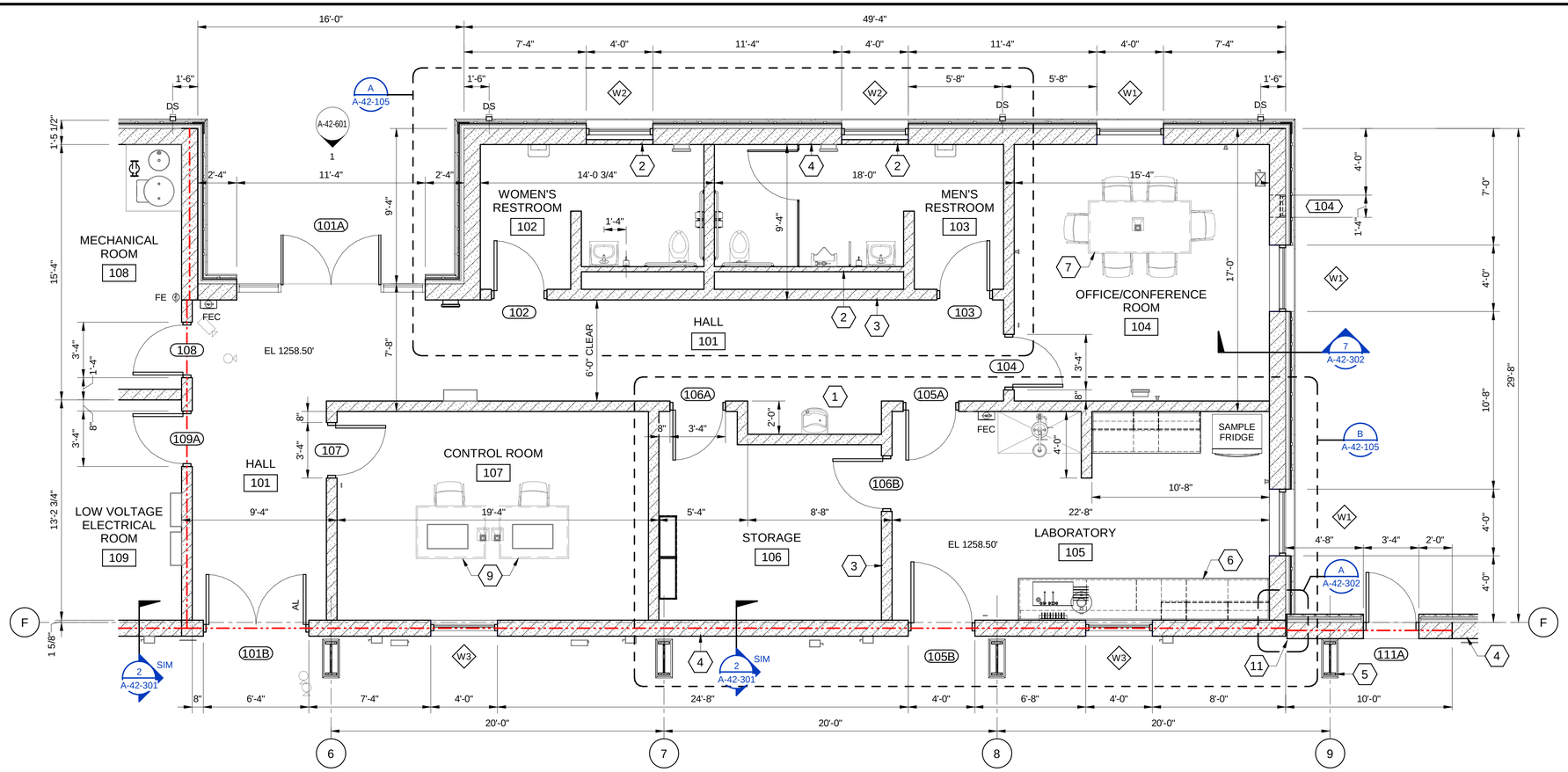

A-42-103 PARTIAL FLOOR PLAN 1/4" = 1'-0"

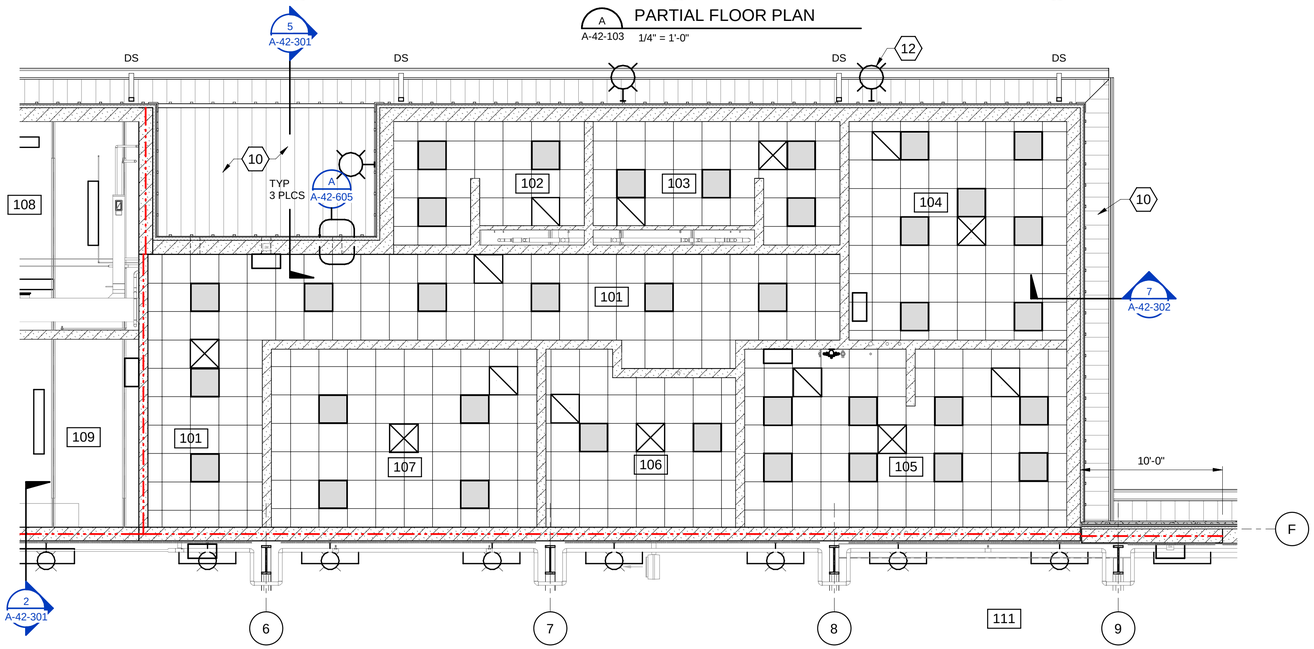

OPERATING LEVEL - REFLECTED CEILING PLAN

3/16" = 1'-0"

GENERAL SHEET NOTES

1. SEE OVERALL FLOOR PLAN FOR ARCHITECTURAL SYMBOLS AND SCHEDULE SHEET FOR ARCHITECTURAL ABBREVIATIONS.
2. WALL LAYOUT DIMENSIONS ARE TO MASONRY FACE UNLESS NOTED OTHERWISE ON PLAN.
3. LABORATORY CABINETS ARE PER KEWAUNEE SCIENTIFIC CORPORATION UNLESS NOTED OTHERWISE.
4. SEE LABORATORY ELEVATIONS FOR CABINET IDENTIFICATIONS NOT SHOWN ON PLAN.
5. FOR EXTERIOR LIGHT FIXTURES SEE ELECTRICAL DRAWINGS.

SHEET KEYNOTES

1. ADA HEIGHT DRINKING FOUNTAIN, SEE PLUMBING DRAWINGS.
2. 4 INCH CONCRETE MASONRY UNIT, TYPICAL.
3. 8 INCH CONCRETE MASONRY UNIT (CMU), TYPICAL.
4. 12 INCH CONCRETE MASONRY UNIT, TYPICAL.
5. COLUMN PER PEMB MANUFACTURER.
6. LABORATORY CABINETRY & COUNTER TOPS, TYPICAL. REFERENCE LABORATORY ELEVATIONS & SCHEDULE FOR ADDITIONAL INFORMATION .
7. 6 PERSON TABLE & CHAIRS TO BE PROVIDED BY OWNER.
8. ACOUSTICAL WALL PANEL & INSULATION OVER 2" METAL Z-FURRING, TYPICAL. PUMP ROOM SIDE.
9. 2 DESKS & CHAIRS, W/ 6 NETWORK DROPS TO BE PROVIDED BY OWNER.
10. PREFINISHED METAL SOFFIT PANELS OVER METAL FURRING.
11. FIRE-RATED EXPANSION JOINT.
12. EXTERIOR LIGHT FIXTURE, TYPICAL.

CEILING PLAN LEGEND

- LIGHT FIXTURES
- EXHAUST DIFFUSER OR RETURN DIFFUSER
- SUPPLY DIFFUSER
- AIR CONDITIONER
- SOUND ATTENUATION
- 2 HOUR FIRE BARRIER

PLAN NORTH / SITE NORTH

6' 4' 2' 0' 5' 10'
3/16" = 1'-0"

4' 2' 0' 4' 8'
1/4" = 1'-0"

(SCALE BAR IS 4" AT FULL SCALE) 0 1/2 1 2 3 4

Black & Veatch Architects Arkansas, PLLC
Overland Park, Kansas
COA: LL209

olsson

THIS DOCUMENT WAS ORIGINALLY ISSUED AND SEALED ON JANUARY 24, 2023 BY RICHARD A. BARTHOLOMEW, A LICENSED PROFESSIONAL ARCHITECT IN THE STATE OF ARKANSAS, A-8861

BEAVER WATER DISTRICT

WESTERN CORRIDOR PUMP STATION

100% SET

REVISIONS AND RECORD OF ISSUE

DESIGNED:	RAB
DETAILED:	DAY
CHECKED:	DRH
APPROVED:	RAB
DATE:	JANUARY 24, 2023
PROJECT NO.:	405654

PUMP STATION

ARCHITECTURAL

PARTIAL PLAN & REFLECTED CEILING PLAN

A-42-104

OF 159

PLOTTED: 1/20/2023 7:32:32 AM
FILE: BIM 360://405654 - BWD Western Corridor Pump Station/405654-42-PUMP STATION.rvt
D11000

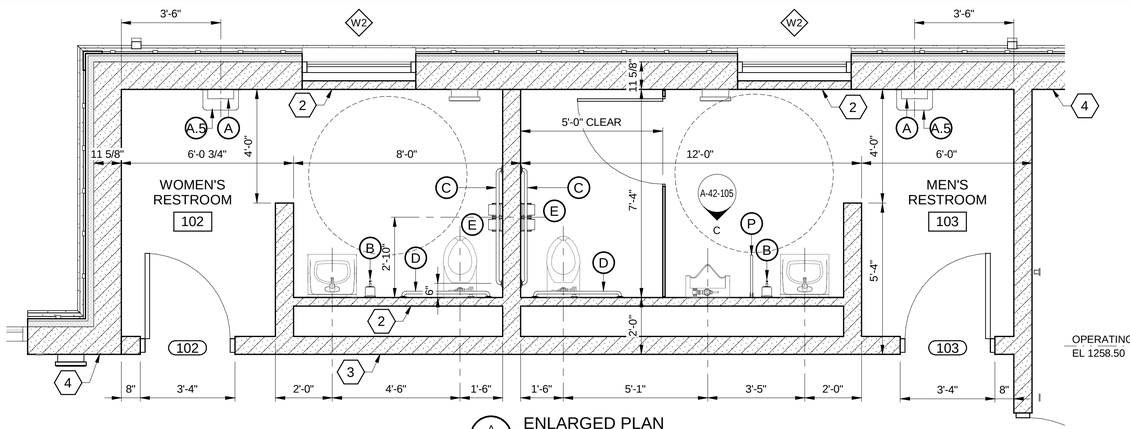

A A-42-104 ENLARGED PLAN 3/8" = 1'-0"

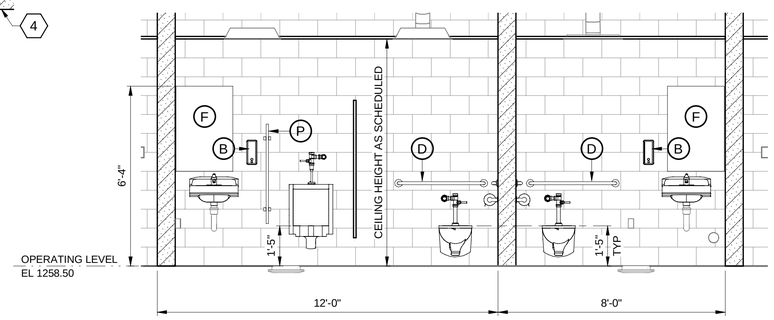

C A-42-105 ELEVATION 3/8" = 1'-0"

GENERAL SHEET NOTES

1. SEE OVERALL FLOOR PLAN FOR ARCHITECTURAL SYMBOLS AND SCHEDULE SHEET FOR ARCHITECTURAL ABBREVIATIONS.
2. WALL LAYOUT DIMENSIONS ARE TO MASONRY FACE UNLESS NOTED OTHERWISE ON PLAN.
3. LABORATORY CABINETS ARE PER KEWAUNEE SCIENTIFIC CORPORATION UNLESS NOTED OTHERWISE.
4. SEE LABORATORY ELEVATIONS FOR CABINET IDENTIFICATIONS NOT SHOWN ON PLAN.

SHEET KEYNOTES

1. ADA HEIGHT DRINKING FOUNTAIN, SEE PLUMBING DRAWINGS.
2. 4 INCH CONCRETE MASONRY UNIT, TYPICAL.
3. 8 INCH CONCRETE MASONRY UNIT (CMU), TYPICAL.
4. 12 INCH CONCRETE MASONRY UNIT, TYPICAL.
5. COLUMN PER PEMB MANUFACTURER.
6. NOT USED.
7. EMERGENCY SHOWER & EYEWASH, SEE PLUMBING DRAWINGS.
8. NOT USED.
9. LABORATORY SAMPLE FRIDGE TO BE PROVIDED BY OWNER.

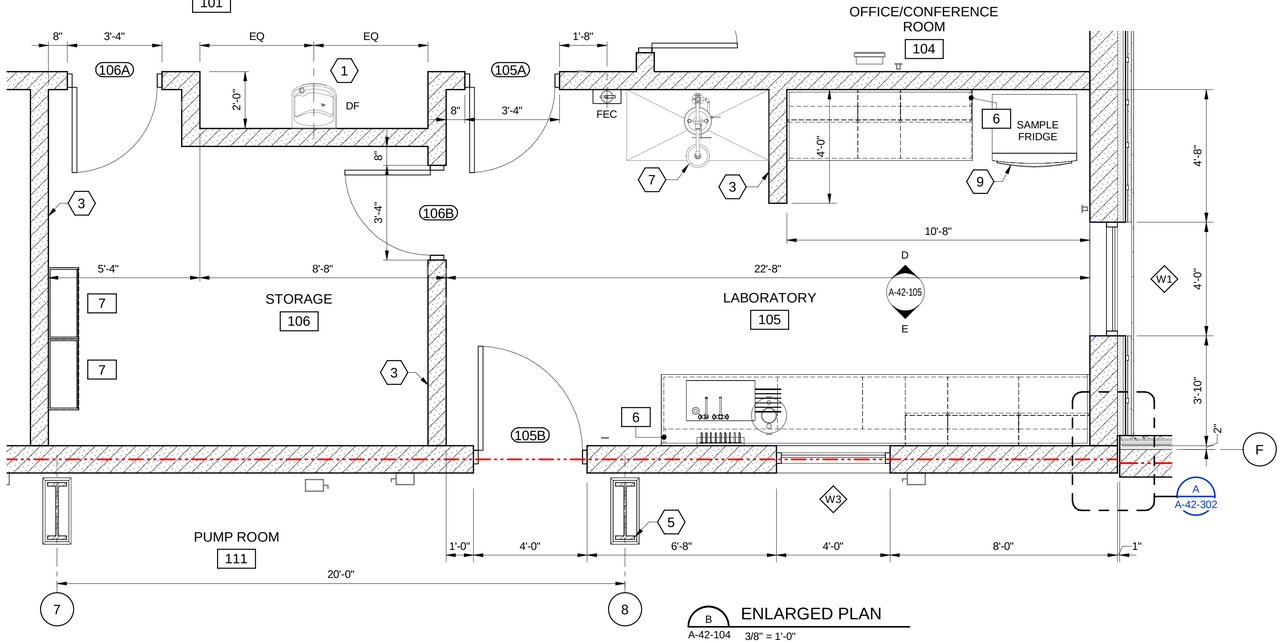

B A-42-104 ENLARGED PLAN 3/8" = 1'-0"

ACCESSORY SCHEDULE

QTY	TYPE	DESCRIPTION	MOUNTING HEIGHT
WESTERN CORRIDOR PUMP STATION			
2	A	SURFACE-MOUNTED AUTOMATIC TOWEL DISPENSER	3'-8" TO BOTTOM
2	A.5	SURFACE-MOUNTED WASTE RECEPTACLE	2'-8" TO WASTE RECEPTACLE TOP LIP
2	B	SURFACE-MOUNTED AUTOMATIC SOAP DISPENSER	4'-0" TO BOTTOM
2	C	48" GRAB BAR	3'-0" TO TOP OF GRIPPING SURFACE
2	D	36" GRAB BAR	3'-0" TO TOP OF GRIPPING SURFACE
2	E	TOILET TISSUE DISPENSER	2'-4" TO CL
2	F	FRAMED WALL MIRROR (24" x 36")	6'-0" TO TOP
1	G	SHELF	5'-0" TO TOP
1	H	MOP HANGER	6'-0" TO TOP, SEE MECHANICAL ROOM ON OVERALL PLAN
1	P	RESTROOM PARTITIONS, URINAL SCREEN	

LABORATORY SCHEDULE

QTY	TYPE MARK	DESCRIPTION	HEIGHT	MODEL No.	COMMENTS
WESTERN CORRIDOR PUMP STATION					
4	1	CUPBOARD & DRAWER CABINET	ADA	E40W342230-	
1	2	CUPBOARD & DRAWER CABINET	ADA	E40W342236-	
3	4	DRAWER CABINET	ADA	D30W342218-	
1	5	SINK CABINET	ADA	G00W322248-	w/ SM-09-00-BK TUB SINK & K-WSS-30 SINK SUPPORT KIT
2	6	REAR SCRIBE	ADA	X-WP0732-00	
2	7	FULL HEIGHT STORAGE CABINET		S25W841230-	w/ SM-09-00-BK TUB SINK & K-WSS-30 SINK SUPPORT KIT
1	8	WALL MOUNTED SINGLE STORAGE CABINET		W20W301218L	WALL MOUNTED STORAGE CABINET, LEFT HAND
1	9	WALL MOUNTED SINGLE STORAGE CABINET		W20W301218	
4	10	WALL MOUNTED DOUBLE STORAGE CABINET		W20W301230-	
1	11	KEMESIN PEGBOARD W/ DRIP TROUGH		X-020016	WALL MOUNTED 4'-0" A.F.F. TO BOTTOM OF UNIT
1	12	MIXING FAUCET		W-0340-00	
1	13	DEIONIZED WATER FAUCET		W-0407-00	

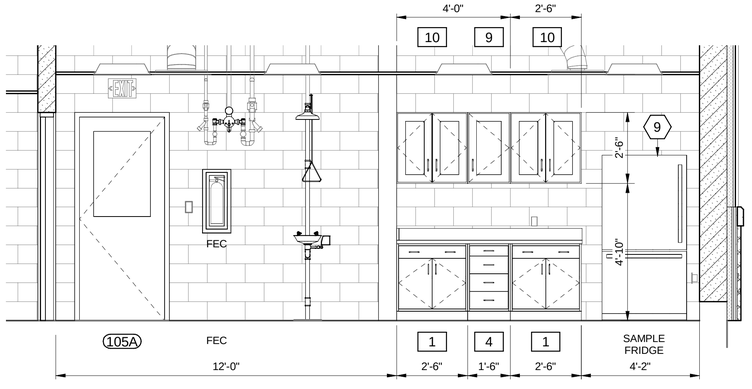

D A-42-105 ELEVATION 3/8" = 1'-0"

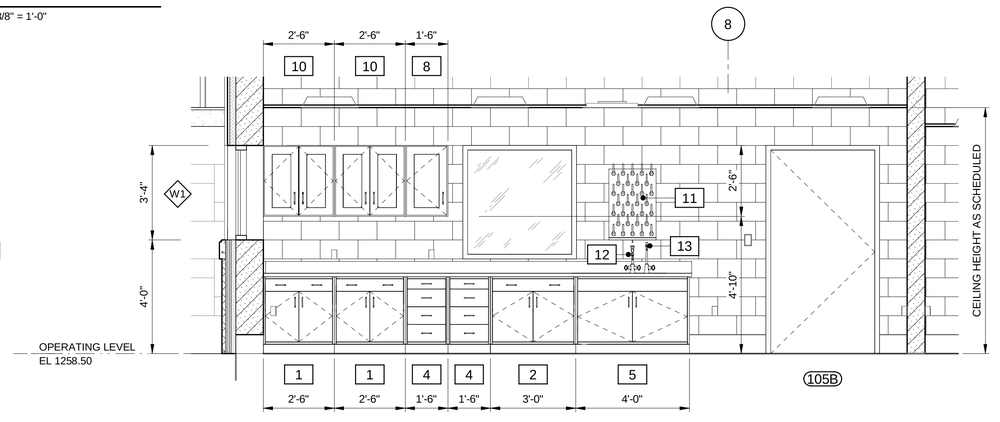

E A-42-105 ELEVATION 3/8" = 1'-0"

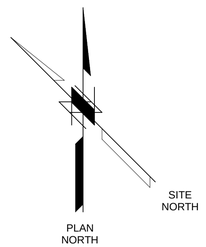

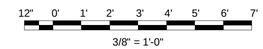

Black & Veatch Architects Arkansas, PLLC
Overland Park, Kansas
COA: LL209

olsson

THIS DOCUMENT WAS ORIGINALLY ISSUED AND SEALED ON JANUARY 24, 2023 BY RICHARD A. BARTHOLOMEW, A LICENSED PROFESSIONAL ARCHITECT IN THE STATE OF ARKANSAS, A-8861

BEAVER WATER DISTRICT

WESTERN CORRIDOR PUMP STATION

100% SET

REVISIONS AND RECORD OF ISSUE

DESIGNED:	RAB, RNP
DETAILED:	DAY
CHECKED:	DRH
APPROVED:	RAB
DATE:	JANUARY 24, 2023
PROJECT NO.:	405654

PUMP STATION

ARCHITECTURAL

ENLARGED PLAN & DETAILS

A-42-105

OF 159

PLOTTED: 1/20/2023 7:34:34 AM
FILE: BIM 360://405654 - BWD Western Corridor Pump Station\405654-42-PUMP STATION.rvt
D11000

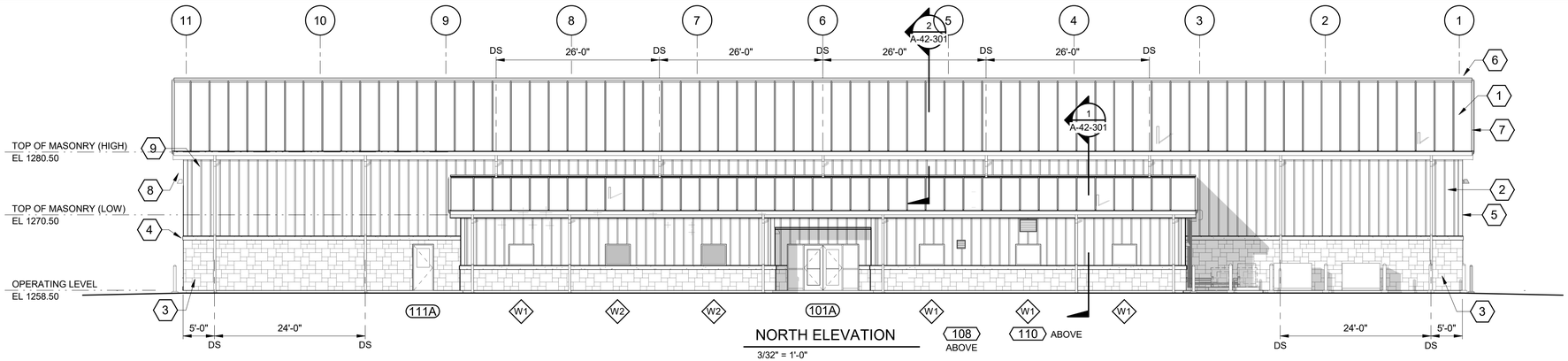

NORTH ELEVATION

3/32" = 1'-0"

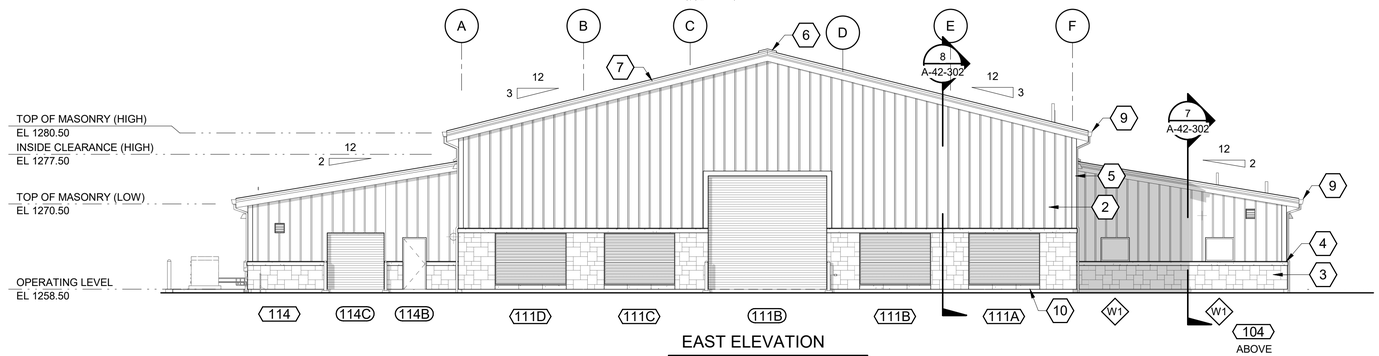

EAST ELEVATION

3/32" = 1'-0"

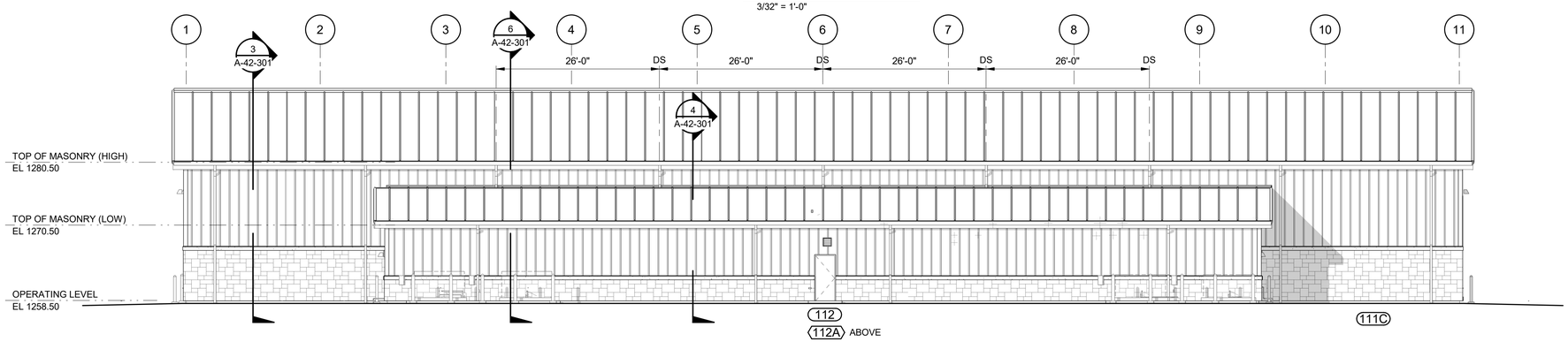

SOUTH ELEVATION

3/32" = 1'-0"

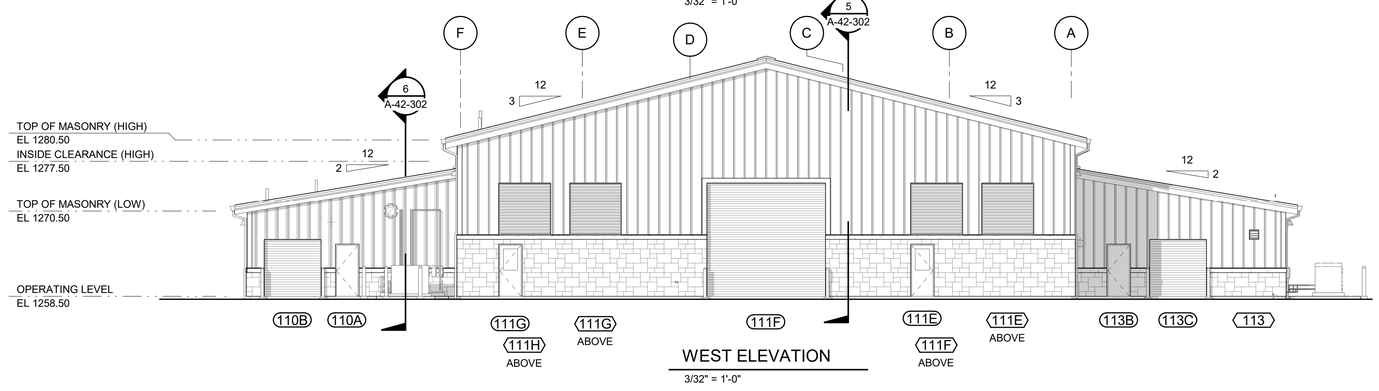

WEST ELEVATION

3/32" = 1'-0"

GENERAL SHEET NOTES

1. BUILDING LINES (BL) ARE TO INTERIOR FACE OF CONCRETE MASONRY (CMU) UNLESS NOTED OTHERWISE ON PLAN.
2. SEE OVERALL PLAN FOR ARCHITECTURAL SYMBOL LEGEND, DRAWING A-42-103

SHEET KEYNOTES

1. INSULATED METAL ROOF PANEL SYSTEM.
2. INSULATED BATTEN METAL WALL PANEL SYSTEM.
3. STONE VENEER.
4. WATERTABLE.
5. PREFINISHED METAL CORNER TRIM, BY WALL PANEL MFGR. TYPICAL
6. PREFINISHED METAL RIDGE CAP.
7. PREFINISHED METAL RAKE TRIM, TYPICAL
8. PREFINISHED METAL FASCIA, TYPICAL
9. PREFINISHED METAL GUTTER SYSTEM W/ DOWNSPOUTS, TYPICAL.
10. MANUFACTURED CAST STONE SHAPE SILL, TYPICAL.

12' 8' 4' 0' 10' 20'

3/32" = 1'-0"

(SCALE BAR IS 4" AT FULL SCALE) 0 1/2 1 2 3 4

Black & Veatch Architects Arkansas, PLLC
Overland Park, Kansas
COA: LL209

olsson

THIS DOCUMENT WAS ORIGINALLY ISSUED AND SEALED ON JANUARY 24, 2023 BY RICHARD A. BARTHOLOMEW, A LICENSED PROFESSIONAL ARCHITECT IN THE STATE OF ARKANSAS, A-8861

BEAVER WATER DISTRICT

WESTERN CORRIDOR PUMP STATION

100% SET

REVISIONS AND RECORD OF ISSUE

DESIGNED:	RAB
DETAILED:	DAY
CHECKED:	DRH
APPROVED:	RAB
DATE:	JANUARY 24, 2023
PROJECT NO.:	405654

PUMP STATION

ARCHITECTURAL

BUILDING ELEVATIONS

A-42-201

OF 159

PLOTTED: 1/20/2023 3:02:22 PM
FILE: BIM 360://405654 - BWD Western Corridor Pump Station/405654-42-PUMP STATION.rvt
D11000

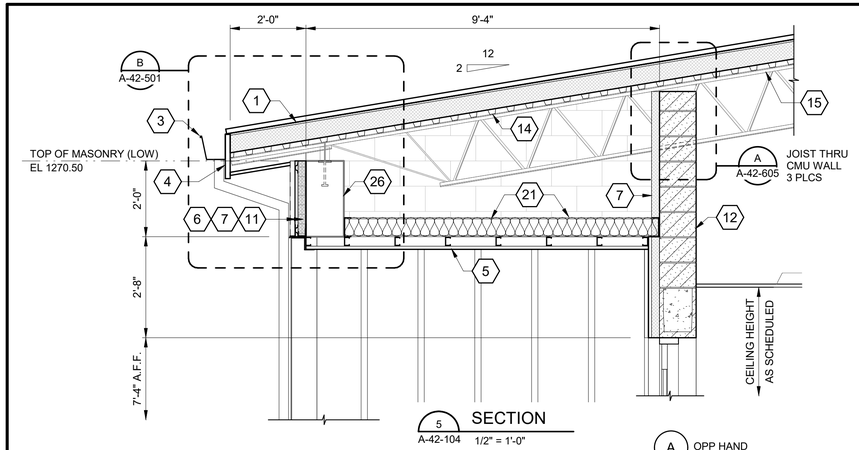

5 SECTION
A-42-104 1/2" = 1'-0"

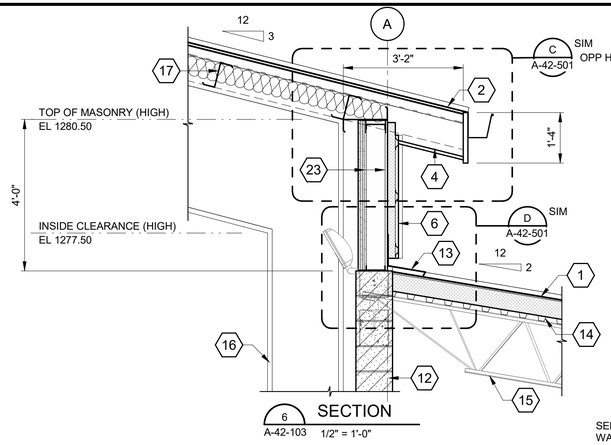

6 SECTION
A-42-103 1/2" = 1'-0"

A DETAIL
A-42-301 1 1/2" = 1'-0"

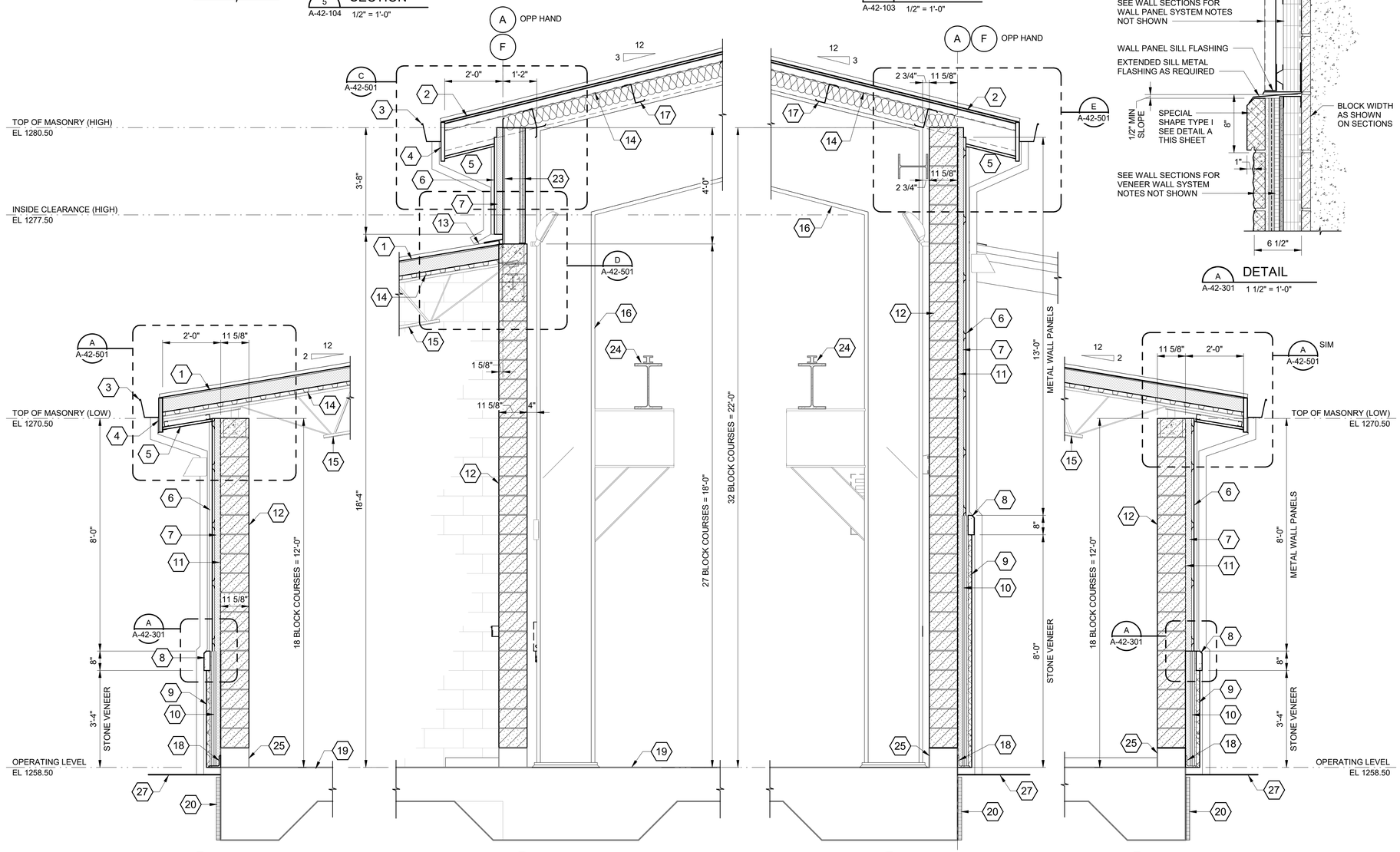

1 SECTION
A-42-103 1/2" = 1'-0"

2 SECTION
A-42-103 1/2" = 1'-0"

3 SECTION
A-42-103 1/2" = 1'-0"

4 SECTION
A-42-103 1/2" = 1'-0"

GENERAL SHEET NOTES

1. SEE OVERALL PLAN FOR BUILDING LINES (BL) & COLUMN GRID LAYOUT.
2. FOR VERTICAL REINFORCING AND BOND BEAMS IN MASONRY DESIGN, SEE STRUCTURAL DRAWINGS.
3. FOR HORIZONTAL JOINT REINFORCING, SEE SPECIFICATION SECTION 04200.

SHEET KEYNOTES

1. LOWER ROOF:
   PREFINISHED METAL STANDING SEAM ROOFING SYSTEM OVER 6" NAILABLE RIGID INSULATION (R-30) ON METAL DECK.
2. UPPER ROOF:
   PREFINISHED METAL STANDING SEAM ROOF PANELS OVER FLEXIBLE BASE SHEET FABRIC ON 3/4" GLASS FIBER CEMENT BOARD DECKING.
3. PREFINISHED METAL GUTTER SYSTEM W/ DOWNSPOUTS.
4. PREFINISHED METAL FASCIA.
5. PREFINISHED METAL SOFFIT PANELS OVER METAL FURRING AS REQUIRED.
6. PREFINISHED METAL WALL PANELS ON 1" HORIZONTAL HAT CHANNELS @ 24" VERTICAL CTRS.
7. 2 1/2" CONTINUOUS RIGID INSULATION (R-12.5 MIN).
8. CAST STONE BANDING.
9. MANUFACTURED ADHERED STONE VENEER SYSTEM: RANDOM ASHLAR PATTERNED THIN STONE OVER A FORTIFIED MORTAR BED ON A VENTILATED RAINSCREEN INTEGRATED W/ A FIBERGLASS LATH SYSTEM.
10. 1/2" CEMENT BOARD.
11. FLUID APPLIED VAPOR BARRIER.
12. 12" CONCRETE BLOCK, TYPICAL.
13. ROOF TO WALL FLASHING,
14. METAL ROOF DECK, SEE STRUCTURAL DRAWINGS.

    REFER TO STRUCTURAL DRAWINGS FOR MORE INFORMATION ON METAL DECK.
15. METAL BAR JOIST, SEE STRUCTURAL DRAWINGS.
16. PRE-ENGINEERED METAL BUILDING (PEMB) STRUCTURE PER PEMB MANUFACTURER.
17. METAL PURLINS PER PEMB MANUFACTURER.
18. VENEER SUPPORT ANGLE, SEE STRUCTURAL.
19. CONCRETE SLAB & FOUNDATION, SEE STRUCTURAL DRAWINGS.
20. 1 1/2" FOUNDATION INSULATION (R-7.5).
21. 6" STRUCTURAL METAL STUD FRAMING @ 1'-4" CTRS WITH 6" BATT INSULATION.
22. NOT USED.
23. 2 HOUR FIRE RATED BARRIER AS REQUIRED TO UNDERSIDE OF STRUCTURE. PROVIDE FIRE STOPPING AND FIRE RATED SEALANT AS REQUIRED FOR ASSEMBLY INDICATED:

    3/4" EXTERIOR GRADE FIRE RATED PLYWOOD SHEATHING OVER 6" METAL STUD FRAMING @ 16" CTRS W/ (4) LAYERS 5/8" GYPSUM BOARD. PAINT TO MATCH CONCRETE BLOCK.
24. BRIDGE CRANE RAIL & PEMB COLUMN SUPPORTS BEYOND. SEE STRUCTURAL DRAWINGS.
25. CONCRETE CURB, SEE STRUCTURAL DRAWINGS.
26. CONCRETE BEAM, SEE STRUCTURAL DRAWINGS.
27. FINISH GRADE, SEE CIVIL DRAWINGS.

Black & Veatch Architects Arkansas, PLLC
Overland Park, Kansas
COA: LL209

olsson

THIS DOCUMENT WAS ORIGINALLY ISSUED AND SEALED ON JANUARY 24, 2023 BY RICHARD A. BARTHOLOMEW, A LICENSED PROFESSIONAL ARCHITECT IN THE STATE OF ARKANSAS, A-8861

BEAVER WATER DISTRICT

WESTERN CORRIDOR PUMP STATION

100% SET

REVISIONS AND RECORD OF ISSUE

DESIGNED:	RAB
DETAILED:	DAY
CHECKED:	DRH
APPROVED:	RAB
DATE:	JANUARY 24, 2023
PROJECT NO.:	405654

PUMP STATION

ARCHITECTURAL

SECTIONS

A-42-301

OF 159

12' 6' 0' 1' 2' 3' 4' 5'
1/2" = 1'-0"

12" 9" 6" 3" 0" 1'
1 1/2" = 1'-0"

(SCALE BAR IS 4" AT FULL SCALE) 0 1/2 1 2 3 4

PLOTTED: 1/20/2023 3:03:16 PM
FILE: BIM 360://405654 - BWD Western Corridor Pump Station\405654-42-PUMP STATION.rvt
D11000

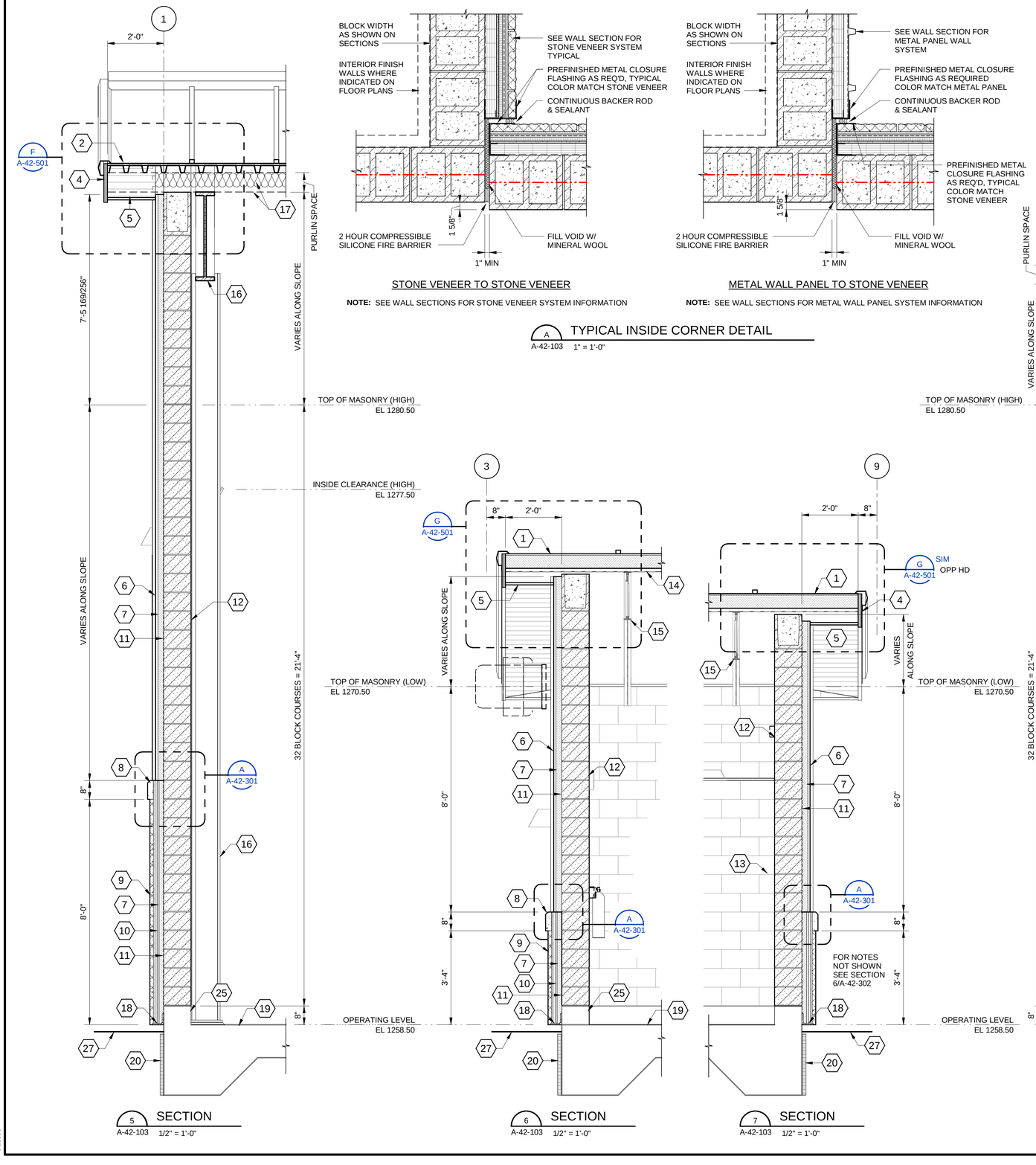

GENERAL SHEET NOTES

1. SEE OVERALL PLAN FOR BUILDING LINES (BL) & COLUMN GRID LAYOUT.
2. FOR VERTICAL REINFORCING AND BOND BEAMS IN MASONRY DESIGN, SEE STRUCTURAL DRAWINGS.
3. FOR HORIZONTAL JOINT REINFORCING, SEE SPECIFICATION SECTION 04200.

SHEET KEYNOTES

1. LOWER ROOF: PREFINISHED METAL STANDING SEAM ROOFING SYSTEM OVER 6" NAILABLE RIGID INSULATION (R-30) ON METAL DECK.
2. UPPER ROOF: PREFINISHED METAL STANDING METAL ROOF PANELS OVER FLEXIBLE BASE SHEET FABRIC ON 3/4" GLASS FIBER CEMENT BOARD DECKING.
3. PREFINISHED METAL GUTTER SYSTEM W/ DOWNSPOUTS.
4. PREFINISHED METAL FASCIA & EDGE TRIM.
5. PREFINISHED METAL SOFFIT PANELS OVER METAL FURRING AS REQUIRED.
6. PREFINISHED METAL WALL PANELS ON 1" HORIZONTAL HAT CHANNELS @ 24" VERTICAL CTRS.
7. 2 1/2" CONTINUOUS RIGID INSULATION (R-12.5 MIN).
8. CAST STONE BANDING.
9. MANUFACTURED ADHERED STONE VENEER SYSTEM: RANDOM ASHLAR PATTERNED THIN STONE OVER A FORTIFIED MORTAR BED ON A VENTILATED RAINSCREEN INTEGRATED W/ A FIBERGLASS LATH SYSTEM.
10. 1/2" CEMENT BOARD.
11. FLUID APPLIED VAPOR BARRIER.
12. 12" CONCRETE BLOCK, TYPICAL.
13. 5/8" GYPSUM BOARD OVER 2 1/2" METAL STUD FRAMING @ 1'-4" CTRS.
14. METAL ROOF DECK, SEE STRUCTURAL DRAWINGS.

    REFER TO STRUCTURAL DRAWINGS FOR MORE INFORMATION ON METAL DECK.
15. METAL BAR JOIST, SEE STRUCTURAL DRAWINGS.
16. PRE-ENGINEERED METAL BUILDING (PEMB) STRUCTURE PER PEMB MANUFACTURER.
17. METAL PURLINS PER PEMB MANUFACTURER. BAG TYPE INSULATION BETWEEN PURLINS.
18. VENEER SUPPORT ANGLE, SEE STRUCTURAL.
19. CONCRETE SLAB & FOUNDATION, SEE STRUCTURAL DRAWINGS.
20. 1 1/2" FOUNDATION INSULATION (R-7.5).
21. 6" STRUCTURAL METAL STUD FRAMING @ 1'-4" CTRS WITH 6" BATT INSULATION.
22. NOT USED.
23. 2 HOUR FIRE RATED BARRIER AS REQUIRED TO UNDERSIDE OF STRUCTURE. PROVIDE FIRE STOPPING AND FIRE RATED SEALANT AS REQUIRED FOR ASSEMBLY INDICATED:

    3/4" EXTERIOR GRADE PLYWOOD SHEATHING OVER 6" METAL STUD FRAMING @ 16" CTRS W/ (4) LAYERS 5/8" GYPSUM BOARD. PAINT TO MATCH CONCRETE BLOCK.
24. BRIDGE CRANE RAIL & PEMB COLUMN SUPPORTS BEYOND. SEE STRUCTURAL DRAWINGS.
25. CONCRETE CURB, SEE STRUCTURAL DRAWINGS.
26. CONCRETE BEAM, SEE STRUCTURAL DRAWINGS.
27. FINISH GRADE, SEE CIVIL DRAWINGS.

Black & Veatch Architects Arkansas, PLLC
Overland Park, Kansas
COA: LL209

olsson

THIS DOCUMENT WAS ORIGINALLY ISSUED AND SEALED ON JANUARY 24, 2023 BY RICHARD A. BARTHOLOMEW, A LICENSED PROFESSIONAL ARCHITECT IN THE STATE OF ARKANSAS, A-8861

BEAVER WATER DISTRICT

WESTERN CORRIDOR PUMP STATION

100% SET

REVISIONS AND RECORD OF ISSUE	
DESIGNED:	RAB
DETAILED:	DAY
CHECKED:	DRH
APPROVED:	RAB
DATE:	JANUARY 24, 2023
PROJECT NO.:	405654

PUMP STATION

ARCHITECTURAL

SECTIONS

A-42-302

OF 159

12' 6' 0' 1' 2' 3' 4' 5'
1/2" = 1'-0"

12" 9" 36" 3" 0' 1" 12"
1" = 1'-0"

(SCALE BAR IS 4" AT FULL SCALE) 0 1/2 1 2 3 4

PLOTTED: 1/20/2023 7:33:51 AM
FILE: BIM 360://405654 - BWD Western Corridor Pump Station/405654-42-PUMP STATION.rvt
D11000

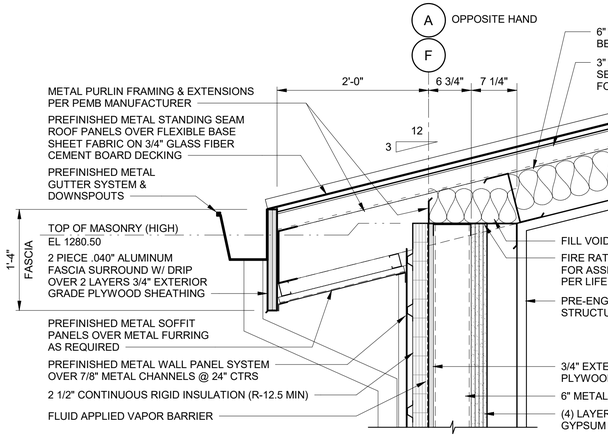

UPPER ROOF FASCIA
@ STUD FRAMED WALL

C A-42-301 1" = 1'-0"

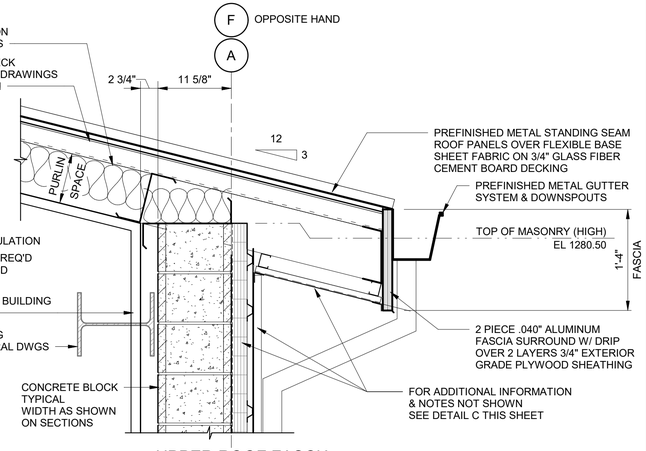

UPPER ROOF FASCIA
@ MASONRY WALL

E A-42-301 1" = 1'-0"

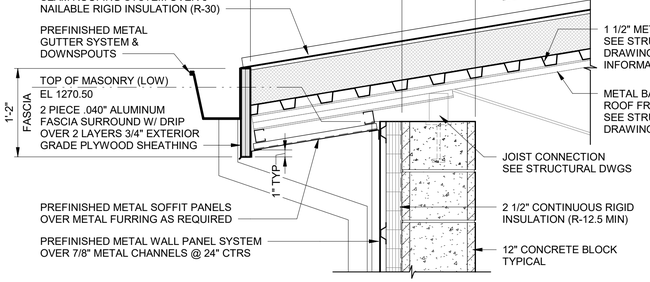

TYPICAL LOWER ROOF FASCIA EDGE

A A-42-301 1" = 1'-0"

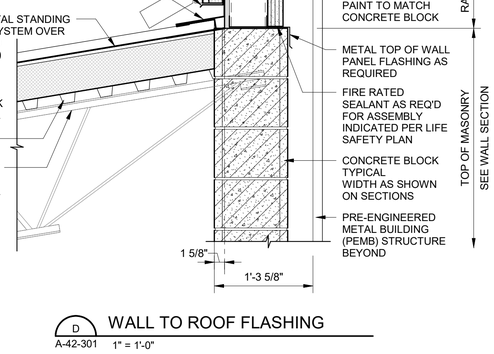

WALL TO ROOF FLASHING

D A-42-301 1" = 1'-0"

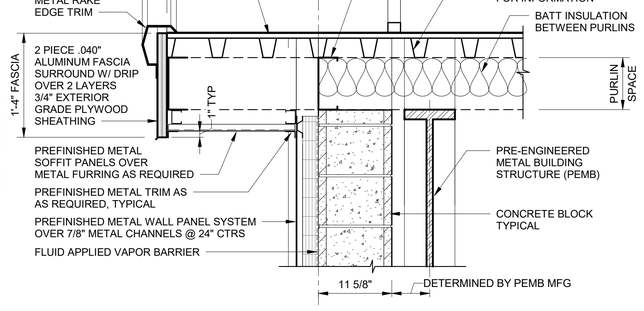

TYPICAL UPPER ROOF RAKE EDGE

F A-42-302 1" = 1'-0"

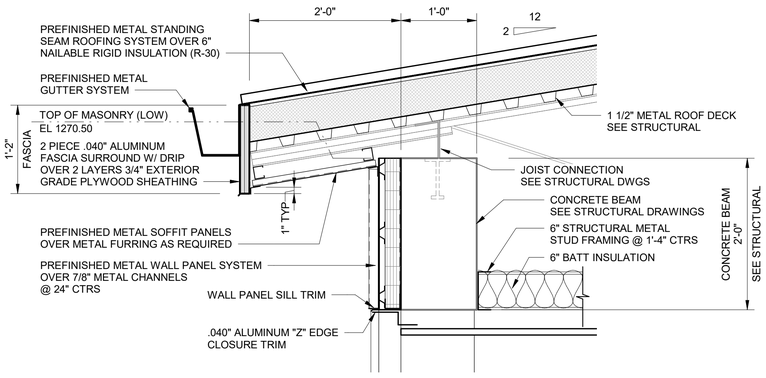

ROOF FASCIA EDGE @ ENTRANCE

B A-42-301 1" = 1'-0"

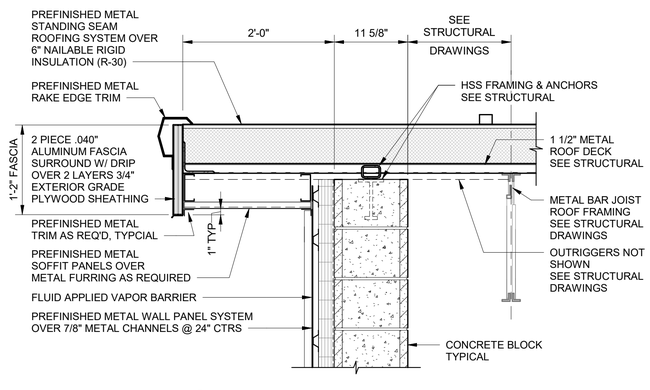

TYPICAL LOWER ROOF RAKE EDGE

G A-42-302 1" = 1'-0"

GENERAL SHEET NOTES

1. SEE OVERALL PLAN FOR BUILDING LINES (BL) & COLUMN GRID LAYOUT.

   BUILDING & GRID LINES ARE TO MASONRY FACE UNLESS NOTED OTHERWISE ON PLAN OR SECTION.

2. FOR VERTICAL REINFORCING AND BOND BEAMS IN MASONRY DESIGN, SEE STRUCTURAL DRAWINGS.

3. FOR HORIZONTAL JOINT REINFORCING, SEE SPECIFICATION SECTION 04200.

4. COORDINATE ACOUSTICAL PANEL INSTALLATION W/ FRAMED PANEL OPENINGS AT WALL LIGHT FIXTURE LOCATIONS. SEE ELECTRICAL DRAWINGS.

BLACK & VEATCH
Black & Veatch Corporation
Kansas City, Missouri

olsson

THIS DOCUMENT WAS ORIGINALLY ISSUED AND SEALED ON JANUARY 24, 2023 BY RICHARD A. BARTHOLOMEW, A LICENSED PROFESSIONAL ARCHITECT IN THE STATE OF ARKANSAS, A-8861

BEAVER WATER DISTRICT

WESTERN CORRIDOR PUMP STATION

100% SET

REVISIONS AND RECORD OF ISSUE	
DESIGNED:	RAB
DETAILED:	DAY
CHECKED:	DRH
APPROVED:	RAB
DATE:	JANUARY 24, 2023
PROJECT NO.:	405654

PUMP STATION

ARCHITECTURAL

DETAILS

A-42-501

OF 159

12" 9" 36" 3" 0' 61" 122'

1" = 1'-0"

(SCALE BAR IS 4" AT FULL SCALE) 0 1/2 1 2 3 4

PLOTTED: 1/20/2023 3:04:03 PM
FILE: BIM 360://405654 - BWD Western Corridor Pump Station/405654-42-PUMP STATION.rvt
D11000

ROOM FINISH SCHEDULE

BLDG	ROOM No.	ROOM NAME	FLOOR MATRL	FLOOR FINISH	NORTH MATRL	NORTH FINISH	NORTH BASE	EAST MATRL	EAST FINISH	EAST BASE	SOUTH MATRL	SOUTH FINISH	SOUTH BASE	WEST MATRL	WEST FINISH	WEST BASE	CEILING MATRL	CEILING FINISH	CEILING HEIGHT	REMARKS
WESTERN CORRIDOR PUMP STATION																				
42	101	HALL	CO	SF	CB	PT	SBC	CB	PT	SBC	CB	PT	SBC	CB	PT	SBC	SA	FF	8'-8"	
42	102	WOMEN'S RESTROOM	CO	SF	CB	PT	SBC	CB	PT	SBC	CB	PT	SBC	CB	PT	SBC	SA	FF	8'-0"	
42	103	MEN'S RESTROOM	CO	SF	CB	PT	SBC	CB	PT	SBC	CB	PT	SBC	CB	PT	SBC	SA	FF	8'-0"	
42	104	OFFICE/CONFERENCE ROOM	CO	SF	CB	PT	SBS	CB	PT	SBS	CB	PT	SBS	CB	PT	SBS	SA	FF	8'-8"	
42	105	LABORATORY	CO	SF	CB	PT	SBC	CB	PT	SBC	CB	PT	SBC	CB	PT	SBC	SA	FF	8'-8"	
42	106	STORAGE	CO	SF	CB	PT	SBS	CB	PT	SBS	CB	PT	SBS	CB	PT	SBS	SA	FF	8'-0"	
42	107	CONTROL ROOM	CO	SF	CB	PT	SBS	CB	PT	SBS	CB	PT	SBS	CB	PT	SBS	SA	FF	8'-8"	
42	108	MECHANICAL ROOM	CO	FS	CB	PT	NO	CB	PT	NO	CB	PT	NO	CB	PT	NO	EXP	PT	12'-0"	CEILING HEIGHT VARIES ALONG SLOPE, CT WAINSCOT @ MOP SINK
42	109	LOW VOLTAGE ELECTRICAL ROOM	CO	FS	CB	PT	NO	CB	PT	NO	CB	PT	NO	CB	PT	NO	EXP	PT	12'-0"	CEILING HEIGHT VARIES ALONG SLOPE
42	110	WORKSHOP	CO	FS	CB	PT	NO	CB	PT	NO	CB	PT	NO	CB	PT	NO	EXP	PT	12'-0"	CEILING HEIGHT VARIES ALONG SLOPE
42	111	PUMP ROOM	CO	FS	CB/AP	EP/FF	CO	CB/AP	EP/FF	CO	CB/AP	EP/FF	CO	CB/AP	EP/FF	CO	EXP	PT	19'-0"	CEILING HEIGHT VARIES ALONG SLOPE, SEE GENERAL SHEET NOTE 4
42	112	HALL	CO	FS	CB	PT	NO	CB	PT	NO	CB	PT	NO	CB	PT	NO	EXP	PT	12'-0"	CEILING HEIGHT VARIES ALONG SLOPE
42	113	MEDIUM VOLTAGE ELECTRICAL ROOM 1	CO	FS	CB	PT	NO	CB	PT	NO	CB	PT	NO	CB	PT	NO	EXP	PT	12'-0"	CEILING HEIGHT VARIES ALONG SLOPE
42	114	MEDIUM VOLTAGE ELECTRICAL ROOM 2	CO	FS	CB	PT	NO	CB	PT	NO	CB	PT	NO	CB	PT	NO	EXP	PT	12'-0"	CEILING HEIGHT VARIES ALONG SLOPE

DOOR SCHEDULE (D)

DOOR ID BLDG	LEVEL	DOOR No. (D)		DOOR SIZE WIDTH	DOOR SIZE HEIGHT	DOOR TYPE (D)	DOOR MATERIAL	DOOR DETAILS HEAD	DOOR DETAILS JAMB	DOOR DETAILS SILL	GLAZING TYPE (G)	HDWR	RATING	FRAME TYPE (F)	FRAME MATERIAL	FRAME DIMENSIONS HEAD	FRAME DIMENSIONS WIDTH	FRAME DIMENSIONS DEPTH	REMARKS
WESTERN CORRIDOR PUMP STATION																			
42	OPERATING LEVEL	101A	PR	3'-0"	7'-2"	C/C	ALUM	7	7 SIM	8	G1	01	-	F2	ALUM	2"	2"	6"	
42	OPERATING LEVEL	101B	PR	3'-0"	7'-2"	A/A	HM	14	15	16	G0	04	90 MIN	F1	HM	2"	2"	5 3/4"	
42	OPERATING LEVEL	102		3'-0"	7'-2"	A	HM	19	20	21	G0	10	-	F1	HM	2"	2"	5 3/4"	
42	OPERATING LEVEL	103		3'-0"	7'-2"	A	HM	19	20	21	G0	10	-	F1	HM	2"	2"	5 3/4"	
42	OPERATING LEVEL	104		3'-0"	7'-2"	B	HM	19	20	21	G3	09	-	F1	HM	2"	2"	5 3/4"	
42	OPERATING LEVEL	105A		3'-0"	7'-2"	B	HM	19	20	21	G3	08	-	F1	HM	2"	2"	5 3/4"	
42	OPERATING LEVEL	105B		3'-8"	7'-2"	A	HM	14	15	16	G0	08	90 MIN	F1	HM	2"	2"	5 3/4"	
42	OPERATING LEVEL	106A		3'-0"	7'-2"	A	HM	19	20	21	G0	08	-	F1	HM	2"	2"	5 3/4"	
42	OPERATING LEVEL	106B		3'-0"	7'-2"	A	HM	19	20	21	G0	08	-	F1	HM	2"	2"	5 3/4"	
42	OPERATING LEVEL	107		3'-0"	7'-2"	B	HM	19	20	21	G3	07	-	F1	HM	2"	2"	5 3/4"	
42	OPERATING LEVEL	108		3'-0"	7'-2"	A	HM	19	20	21	G0	08	-	F1	HM	2"	2"	5 3/4"	
42	OPERATING LEVEL	109A		3'-0"	7'-2"	A	HM	19	20	21	G0	08	-	F1	HM	2"	2"	5 3/4"	
42	OPERATING LEVEL	109B		3'-0"	7'-2"	A	HM	14 SIM	15 SIM	16	G0	08	90 MIN	F1	HM	2"	2"	5 3/4"	
42	OPERATING LEVEL	110A		3'-0"	7'-2"	A	HM	9	10, 11	12	G0	03	-	F1	HM	2"	2"	5 3/4"	
42	OPERATING LEVEL	110B		8'-0"	8'-0"	-	RA	22	23	24	G0	11	-	-	RA			0"	
42	OPERATING LEVEL	110C	PR	3'-0"	7'-2"	A/A	HM	14 SIM	15 SIM	16	G0	05	90 MIN	F1	HM	2"	2"	5 3/4"	
42	OPERATING LEVEL	111A		3'-0"	7'-2"	A	HM	13	11	12	G3	02	90 MIN	F1	HM	2"	2"	5 3/4"	
42	OPERATING LEVEL	111B		16'-8"	16'-0"	-	RA	25	26	27	G0	11	-	-	RA			0"	
42	OPERATING LEVEL	111C		3'-0"	7'-2"	B	HM	13	11	12	G3	02	-	F1	HM	2"	2"	5 3/4"	
42	OPERATING LEVEL	111D		3'-0"	7'-2"	A	HM	14 SIM	15 SIM	16 SIM	G0	06	90 MIN	F1	HM	2"	2"	5 3/4"	
42	OPERATING LEVEL	111E		3'-0"	7'-2"	B	HM	13	11	12	G3	02	-	F1	HM	2"	2"	5 3/4"	
42	OPERATING LEVEL	111F		16'-8"	16'-0"	-	RA	25	26	27	G0	11	-	-	RA			0"	
42	OPERATING LEVEL	111G		3'-0"	7'-2"	B	HM	13	11	12	G3	02	-	F1	HM	2"	2"	5 3/4"	
42	OPERATING LEVEL	112		3'-0"	7'-2"	A	HM	9	10, 11	12	G0	02	-	F1	HM	2"	2"	5 3/4"	
42	OPERATING LEVEL	113A		3'-0"	7'-2"	A	HM	19	20	21	G0	06	90 MIN	F1	HM	2"	2"	5 3/4"	
42	OPERATING LEVEL	113B		3'-0"	7'-2"	A	HM	9	10, 11	12	G0	02	-	F1	HM	2"	2"	5 3/4"	
42	OPERATING LEVEL	113C		8'-0"	8'-0"	-	RA	22	23	24	G0	11	-	-	RA			0"	
42	OPERATING LEVEL	114A		3'-0"	7'-2"	A	HM	19	20	21	G0	06	90 MIN	F1	HM	2"	2"	5 3/4"	
42	OPERATING LEVEL	114B		3'-0"	7'-2"	A	HM	9	10, 11	12	G0	02	-	F1	HM	2"	2"	5 3/4"	
42	OPERATING LEVEL	114C		8'-0"	8'-0"	-	RA	22	23	24	G0	11	-	-	RA			0"	

GLAZING SCHEDULE (G)

GLAZING TYPE (G)	DESCRIPTION
G0	NO GLAZING
G1	1" TINTED, INSULATED GLAZING
G2	1" SPANDREL, INSULATED GLAZING
G3	1/2" CLEAR SAFETY GLAZING
G4	2 1/8" FIRE RATED GLAZING

FRAME TYPE SCHEDULE (F)

BLDG	LEVEL	QTY	TYPE (F)	OPENING WIDTH	OPENING HEIGHT	WINDOW DETAILS HEAD	JAMB	MULL	SILL	GLAZING TYPE (G)	COMMENTS
WESTERN CORRIDOR PUMP STATION											
42	OPERATING LEVEL	1	F2	11'-4"	7'-4"	1	2	6	8	G1	

WINDOW SCHEDULE (W)

BLDG	LEVEL	QTY	TYPE (W)	OPENING WIDTH	OPENING HEIGHT	WINDOW FRAME DEPTH	WINDOW MATERIAL	DETAILS HEAD	DETAILS JAMB	DETAILS MULL	DETAILS SILL	GLAZING TYPE (G)	TOP ELEV AFF	COMMENTS
WESTERN CORRIDOR PUMP STATION														
42	OPERATING LEVEL	6	W1	4'-0"	3'-4"	4 1/2"	ALUM	28	29	-	30	G1	7'-4"	
42	OPERATING LEVEL	2	W2	4'-0"	3'-4"	4 1/2"	ALUM	31	32	-	33	G2	7'-4"	
42	OPERATING LEVEL	2	W3	4'-0"	4'-0"	4 1/2"	ALUM	40	41	-	42	G4	7'-4"	
42	OPERATING LEVEL	4	W4	4'-0"	4'-0"	4 1/2"	ALUM	37	38	-	39	G4	7'-4"	

LOUVER SCHEDULE (L)

BLDG	LEVEL	LOUVER No. (L)	OPENING WIDTH	OPENING HEIGHT	LOUVER TYPE	LOUVER HEAD	LOUVER JAMB	LOUVER SILL	LOUVER TOP ELEV AFF	REMARKS
WESTERN CORRIDOR PUMP STATION										
42	OPERATING LEVEL	104	1'-4"	1'-4"	ALUM	43	44	45	3'-4"	COLOR TO MATCH METAL WALL PANELS
42	OPERATING LEVEL	108	1'-4"	1'-4"	ALUM	43	44	45	3'-4"	COLOR TO MATCH METAL WALL PANELS
42	OPERATING LEVEL	110	2'-8"	2'-0"	ALUM	43	44	45	11'-4"	COLOR TO MATCH METAL WALL PANELS
42	OPERATING LEVEL	111A	10'-0"	7'-4"	ALUM	46	47	49	8'-0"	COLOR TO MATCH STONE VENEER
42	OPERATING LEVEL	111B	10'-0"	7'-4"	ALUM	46	47	49	8'-0"	COLOR TO MATCH STONE VENEER
42	OPERATING LEVEL	111C	10'-0"	7'-4"	ALUM	46	47	49	8'-0"	COLOR TO MATCH STONE VENEER
42	OPERATING LEVEL	111D	10'-0"	7'-4"	ALUM	46	47	49	8'-0"	COLOR TO MATCH STONE VENEER
42	OPERATING LEVEL	111E	7'-4"	7'-4"	ALUM	43	44	48	16'-0"	COLOR TO MATCH METAL WALL PANELS
42	OPERATING LEVEL	111F	7'-4"	7'-4"	ALUM	43	44	48	16'-0"	COLOR TO MATCH METAL WALL PANELS
42	OPERATING LEVEL	111G	7'-4"	7'-4"	ALUM	43	44	48	16'-0"	COLOR TO MATCH METAL WALL PANELS
42	OPERATING LEVEL	111H	7'-4"	7'-4"	ALUM	43	44	48	16'-0"	COLOR TO MATCH METAL WALL PANELS
42	OPERATING LEVEL	112A	1'-4"	1'-4"	ALUM	43	44	45	10'-0"	COLOR TO MATCH METAL WALL PANELS
42	OPERATING LEVEL	112B	2'-0"	2'-0"	ALUM	43 SIM	44 SIM	45 SIM	10'-8"	COLOR TO MATCH CONCRETE BLOCK
42	OPERATING LEVEL	113	1'-4"	1'-4"	ALUM	43	44	45	9'-4"	COLOR TO MATCH METAL WALL PANELS
42	OPERATING LEVEL	114	1'-4"	1'-4"	ALUM	43	44	45	9'-4"	COLOR TO MATCH METAL WALL PANELS

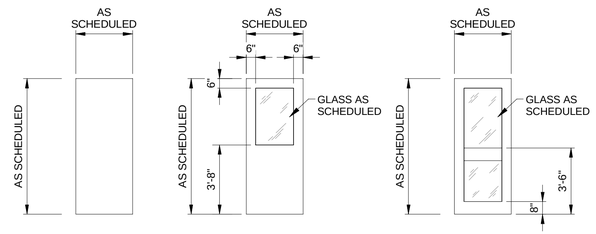

DOOR TYPES

1/4" = 1'-0"

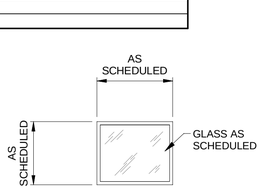

W1, W2, W3 & W4

WINDOW TYPES

1/4" = 1'-0"

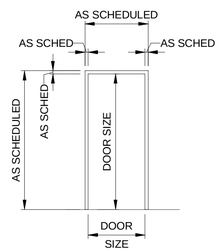

FRAME TYPE F1

1/4" = 1'-0"

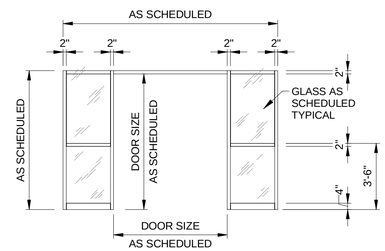

FRAME TYPE F2

1/4" = 1'-0"

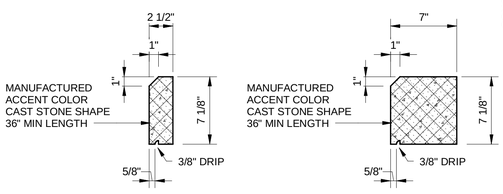

TYPE I TYPE II

A SPECIAL SHAPE TYPES

1 1/2" = 1'-0"

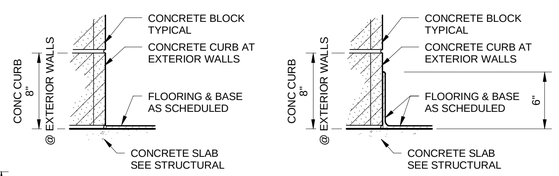

B TYPICAL WALL BASE DETAILS

1 1/2" = 1'-0"

12" 9" 6" 3" 0" 1'

1 1/2" = 1'-0"

4' 2' 0' 4' 8'

1/4" = 1'-0"

(SCALE BAR IS 4" AT FULL SCALE) 0 1/2 1 2 3 4

GENERAL SHEET NOTES

1. BUILDING LINES (BL) ARE TO EXTERIOR FACE OF CONCRETE MASONRY (CMU) & OUTSIDE EDGE OF CONCRETE SLAB UNLESS NOTED OTHERWISE ON PLAN.
2. WALL DIMENSIONS ARE TO MASONRY FACE UNLESS NOTED OTHERWISE ON PLAN.
3. PRE-ENGINEERED METAL BUILDING (PEMB) MANUFACTURER TO DETERMINE COLUMN OFFSET FROM INTERIOR FACE OF MASONRY WALL.
4. PREPAINT CMU WALLS BEFORE INSTALLATION OF THE ACOUSTICAL WALL PANEL SYSTEM.

ARCHITECTURAL ABBREVIATIONS

AL - ACTIVE LEAF
ALUM - ACTIVE LEAF
AP - ACOUSTICAL PANEL
CB - CONCRETE BLOCK
CO - CONCRETE
DF - DRINKING FOUNTAIN
DS - DOWNSPOUT
EP - EPOXY PAINT
EXP - EXPOSED CONSTRUCTION
FE - FIRE EXTINGUISHER
FF - FACTORY FINISH
FS - FLOOR SEALER
GWB - GYPSUM WALLBOARD
HM - HOLLOW METAL
NO - NONE
PT - PAINTED
PR - PAIR
RA - ROLLING ALUMINUM
SA - SUSPENDED ACOUSTICAL PANEL (24" x 24")
SBC - SEAMLESS BASE - COVED
SBS - SEAMLESS BASE - STRAIGHT
SF - SEAMLESS FLOORING
VTR - VENT THROUGH ROOF

Black & Veatch Corporation
Kansas City, Missouri

olsson

THIS DOCUMENT WAS ORIGINALLY ISSUED AND SEALED ON JANUARY 24, 2023 BY RICHARD A. BARTHOLOMEW, A LICENSED PROFESSIONAL ARCHITECT IN THE STATE OF ARKANSAS, A-8861

BEAVER WATER DISTRICT

WESTERN CORRIDOR PUMP STATION

100% SET

REVISIONS AND RECORD OF ISSUE

DESIGNED:	RAB
DETAILED:	DAY
CHECKED:	DRH
APPROVED:	RAB
DATE:	JANUARY 24, 2023
PROJECT NO.:	405654

PUMP STATION

ARCHITECTURAL

SCHEDULES

A-42-601

OF 159

PLOTTED: 1/20/2023 7:29:36 AM
FILE: BIM 360://405654 - BWD Western Corridor Pump Station/405654-42-PUMP STATION.rvt
D11000

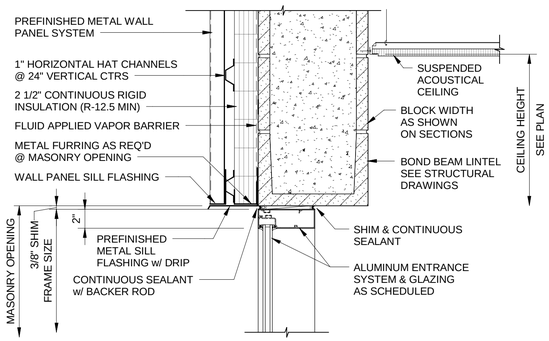

1 HEAD
1 1/2" = 1'-0"

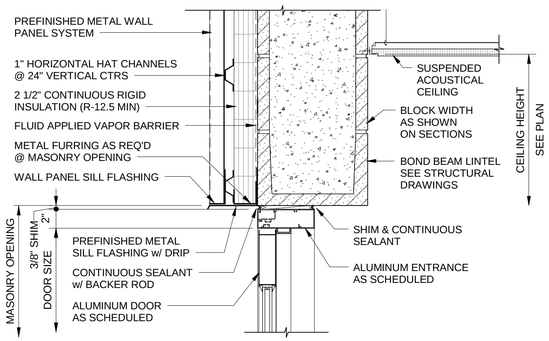

5 HEAD
1 1/2" = 1'-0"

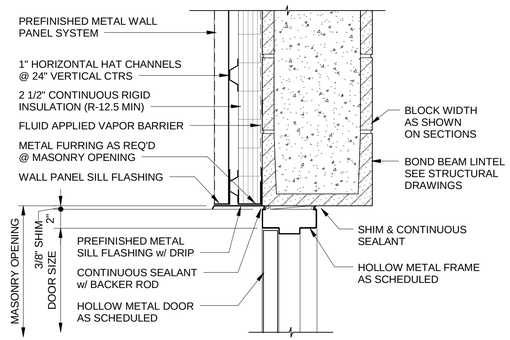

9 HEAD
1 1/2" = 1'-0"

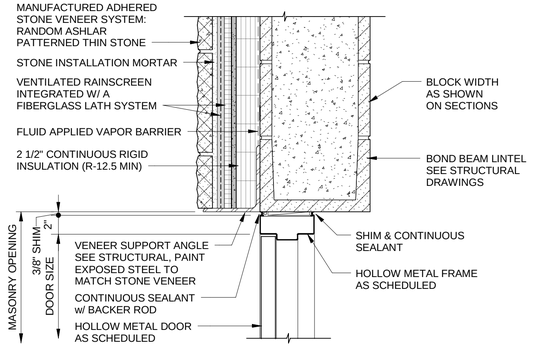

13 HEAD
1 1/2" = 1'-0"

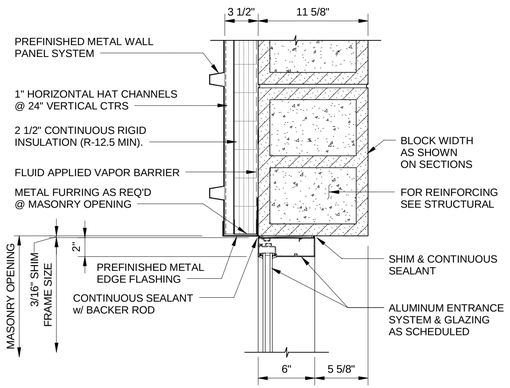

2 JAMB
1 1/2" = 1'-0"

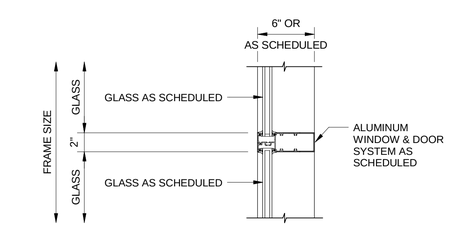

6 MULLION
1 1/2" = 1'-0"

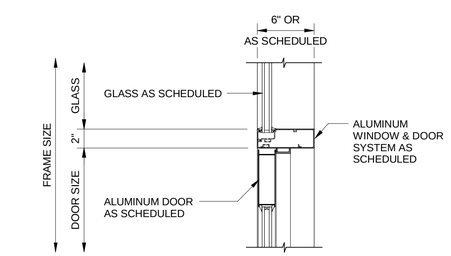

7 HEAD/JAMB/SILL
1 1/2" = 1'-0"

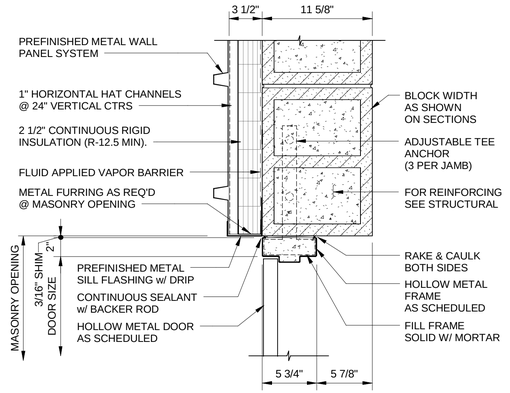

10 JAMB
1 1/2" = 1'-0"

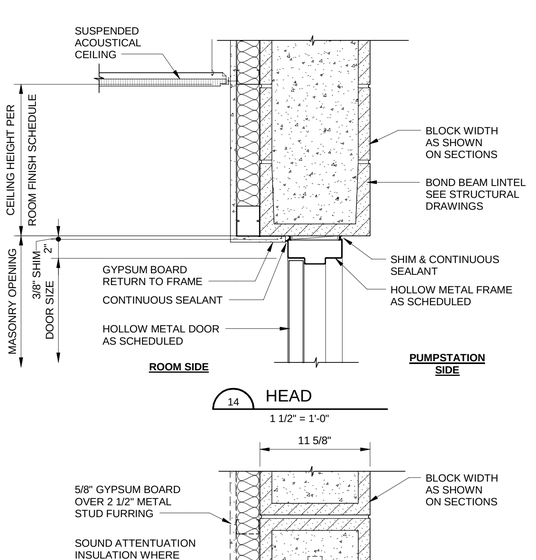

14 HEAD
1 1/2" = 1'-0"

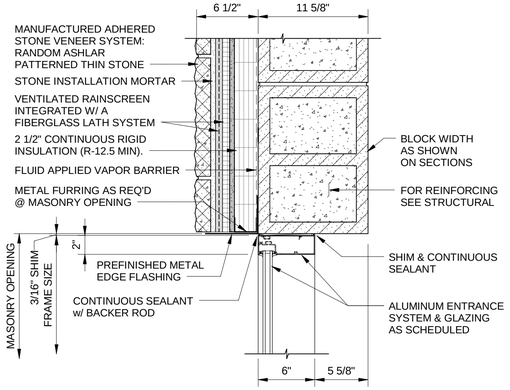

3 JAMB
1 1/2" = 1'-0"

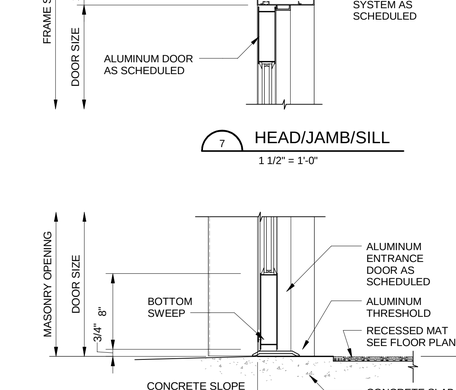

8 SILL
1 1/2" = 1'-0"

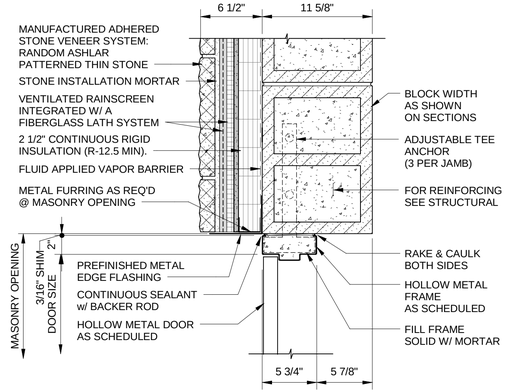

11 JAMB
1 1/2" = 1'-0"

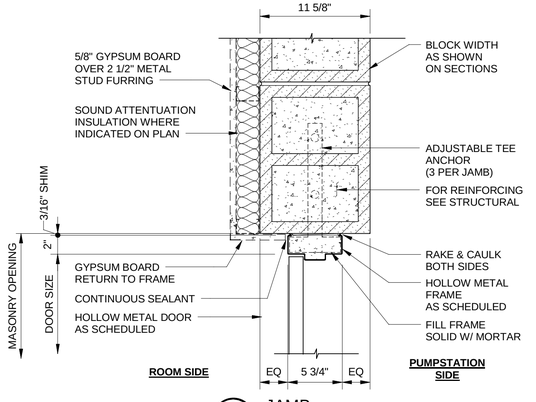

15 JAMB
1 1/2" = 1'-0"

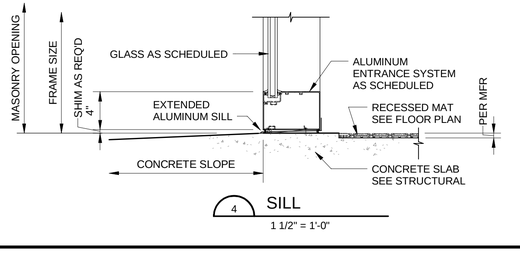

4 SILL
1 1/2" = 1'-0"

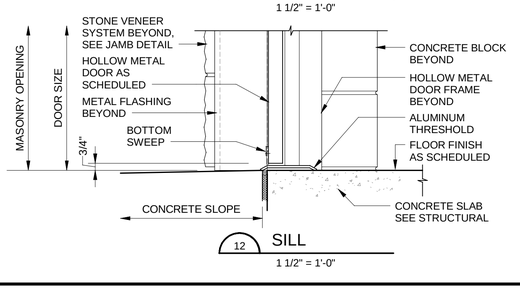

12 SILL
1 1/2" = 1'-0"

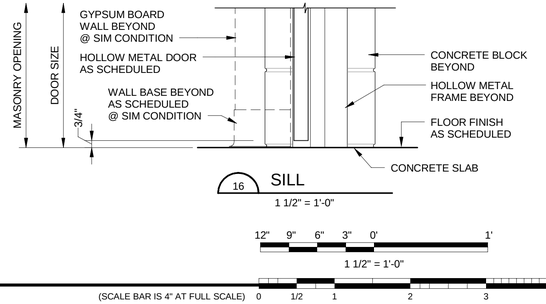

16 SILL
1 1/2" = 1'-0"

12" 9" 6" 3" 0" 1'
1 1/2" = 1'-0"

(SCALE BAR IS 4" AT FULL SCALE) 0 1/2 1 2 3 4

PLOTTED: 1/20/2023 7:35:27 AM
FILE: BIM 360://405654 - BWD Western Corridor Pump Station/405654-42-PUMP STATION.rvt
D11000

Black & Veatch Architects Arkansas, PLLC
Overland Park, Kansas
COA: LL209

olsson

THIS DOCUMENT WAS ORIGINALLY ISSUED AND SEALED ON JANUARY 24, 2023 BY RICHARD A. BARTHOLOMEW, A LICENSED PROFESSIONAL ARCHITECT IN THE STATE OF ARKANSAS, A-8861

BEAVER WATER DISTRICT

WESTERN CORRIDOR PUMP STATION

100% SET

REVISIONS AND RECORD OF ISSUE

DESIGNED:	RAB
DETAILED:	DAY
CHECKED:	DRH
APPROVED:	RAB
DATE:	JANUARY 24, 2023
PROJECT NO.:	405654

PUMP STATION

ARCHITECTURAL

DOOR & WINDOW DETAILS

A-42-602

OF 159

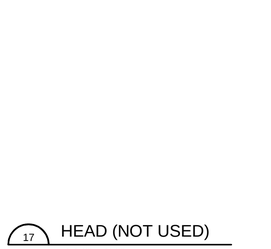

17 HEAD (NOT USED)
1 1/2" = 1'-0"

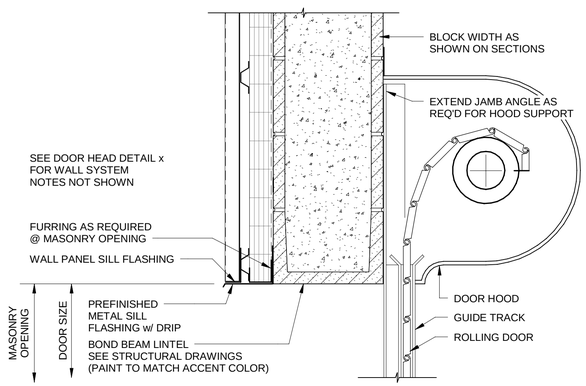

22 HEAD
1 1/2" = 1'-0"

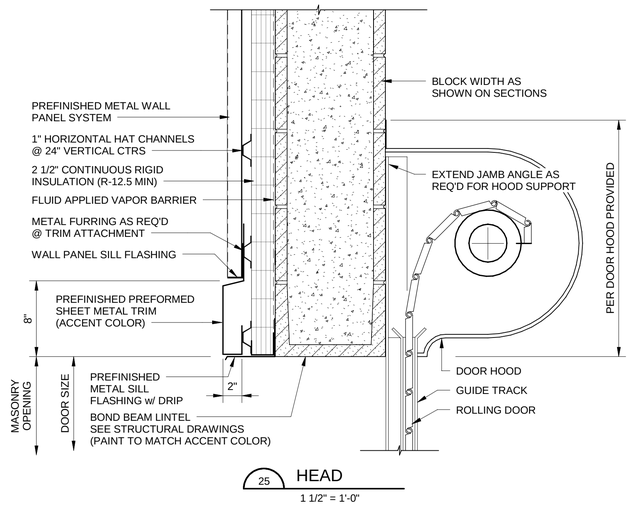

25 HEAD
1 1/2" = 1'-0"

18 JAMB (NOT USED)
1 1/2" = 1'-0"

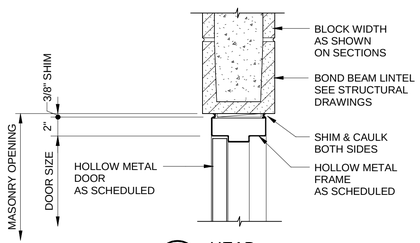

19 HEAD
1 1/2" = 1'-0"

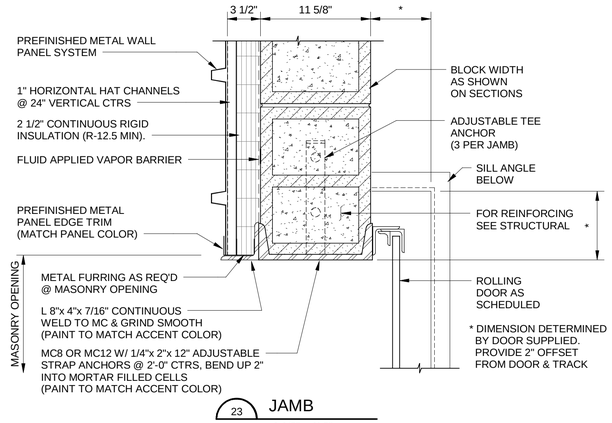

23 JAMB
1 1/2" = 1'-0"

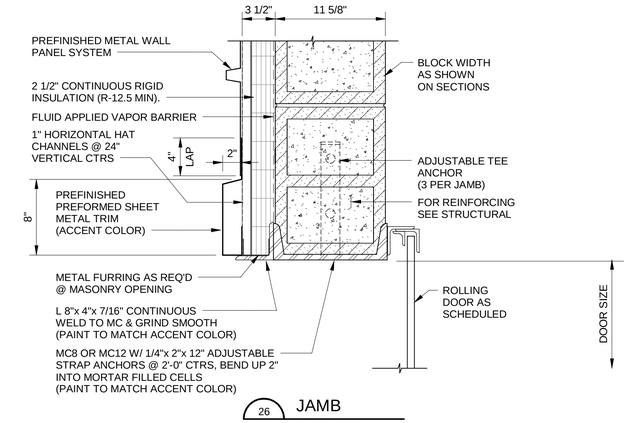

26 JAMB
1 1/2" = 1'-0"

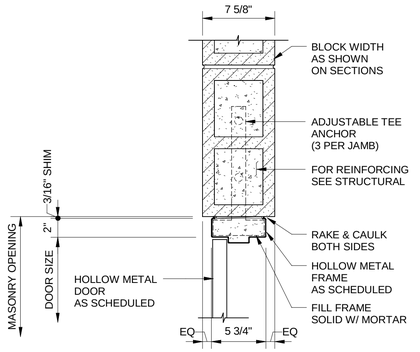

20 JAMB
1 1/2" = 1'-0"

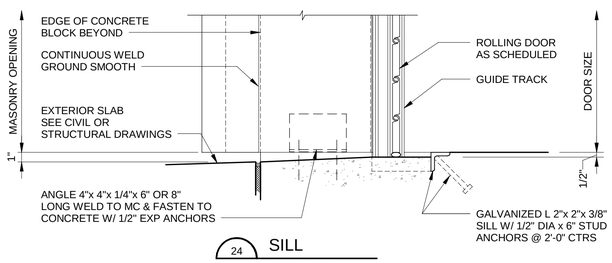

24 SILL
1 1/2" = 1'-0"

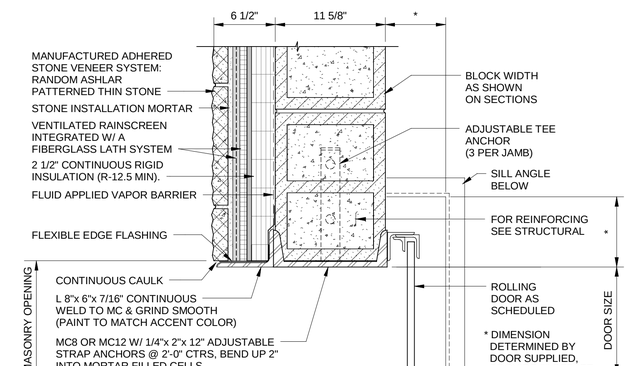

27 JAMB
1 1/2" = 1'-0"

12" 9" 6" 3" 0" 1'
1 1/2" = 1'-0"

(SCALE BAR IS 4" AT FULL SCALE) 0 1/2 1 2 3 4

Black & Veatch Architects Arkansas, PLLC
Overland Park, Kansas
COA: LL209

olsson

THIS DOCUMENT WAS ORIGINALLY ISSUED AND SEALED ON JANUARY 24, 2023 BY RICHARD A. BARTHOLOMEW, A LICENSED PROFESSIONAL ARCHITECT IN THE STATE OF ARKANSAS, A-8861

BEAVER WATER DISTRICT

WESTERN CORRIDOR PUMP STATION

100% SET

REVISIONS AND RECORD OF ISSUE

DESIGNED:	RAB
DETAILED:	DAY
CHECKED:	DRH
APPROVED:	RAB
DATE:	JANUARY 24, 2023
PROJECT NO.:	405654

PUMP STATION

ARCHITECTURAL

DOOR & WINDOW DETAILS

A-42-603

OF 159

PLOTTED: 1/20/2023 7:35:31 AM
FILE: BIM 360://405654 - BWD Western Corridor Pump Station/405654-42-PUMP STATION.rvt
D11000

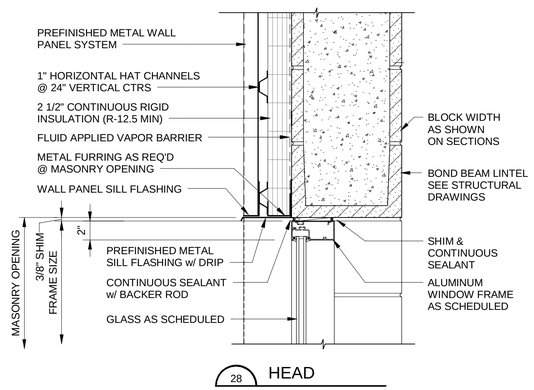

28 HEAD
1 1/2" = 1'-0"

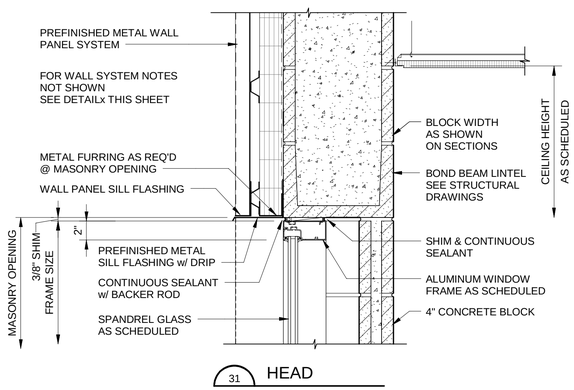

31 HEAD
1 1/2" = 1'-0"

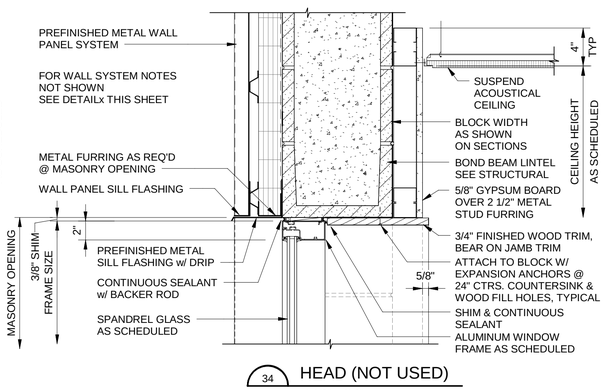

34 HEAD (NOT USED)
1 1/2" = 1'-0"

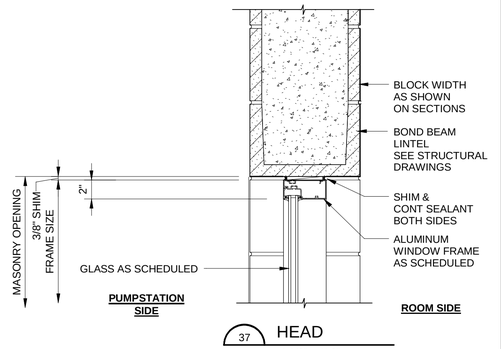

37 HEAD
1 1/2" = 1'-0"

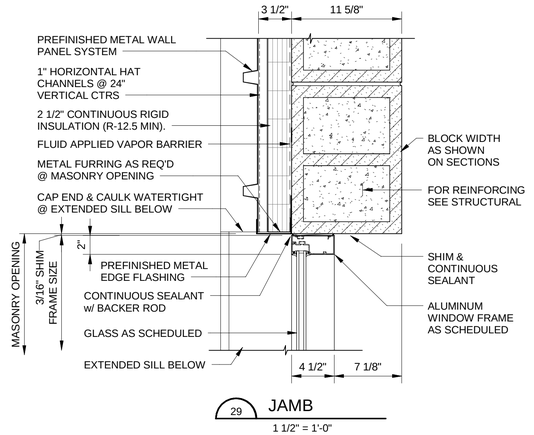

29 JAMB
1 1/2" = 1'-0"

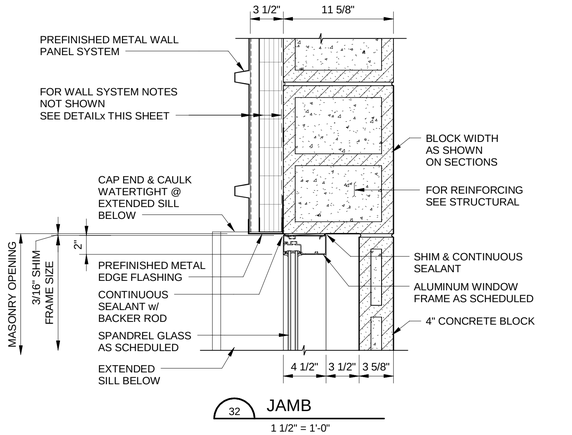

32 JAMB
1 1/2" = 1'-0"

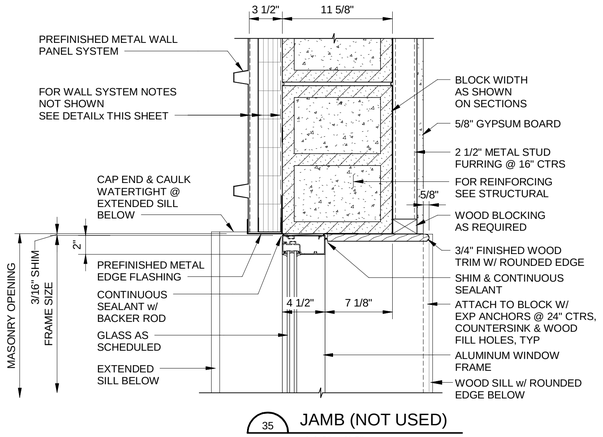

35 JAMB (NOT USED)
1 1/2" = 1'-0"

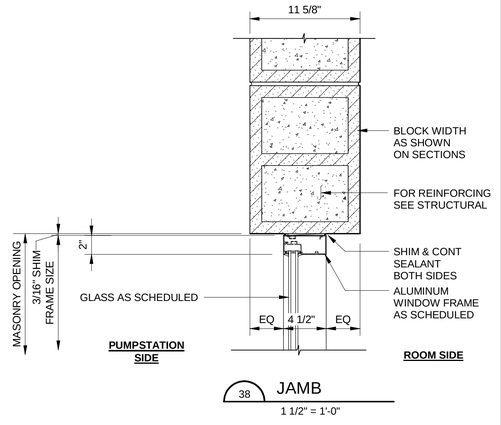

38 JAMB
1 1/2" = 1'-0"

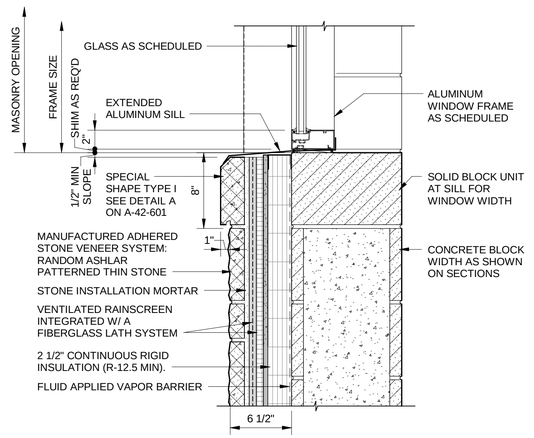

30 SILL
1 1/2" = 1'-0"

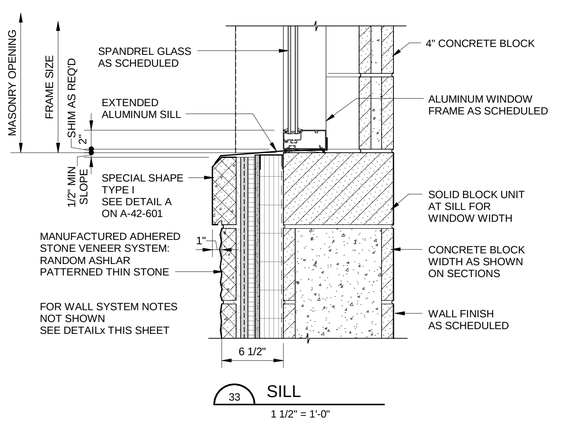

33 SILL
1 1/2" = 1'-0"

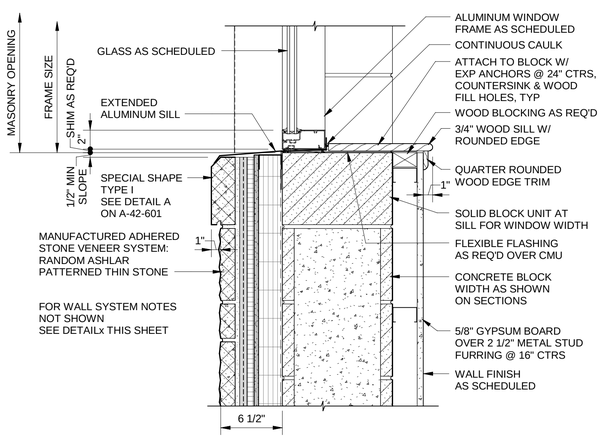

36 SILL (NOT USED)
1 1/2" = 1'-0"

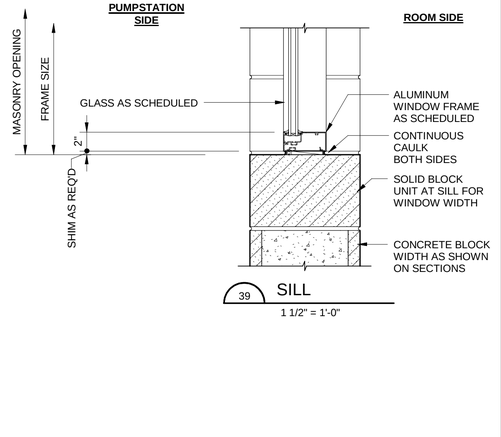

39 SILL
1 1/2" = 1'-0"

12" 9" 6" 3" 0" 1'
1 1/2" = 1'-0"

12" 9" 6" 3" 0"
3" = 1'-0"

(SCALE BAR IS 4" AT FULL SCALE) 0 1/2 1 2 3 4

PLOTTED: 1/20/2023 7:35:36 AM
FILE: BIM 360://405654 - BWD Western Corridor Pump Station/405654-42-PUMP STATION.rvt
D11000

Black & Veatch Architects Arkansas, PLLC
Overland Park, Kansas
COA: LL209

olsson

THIS DOCUMENT WAS ORIGINALLY ISSUED AND SEALED ON JANUARY 24, 2023 BY RICHARD A. BARTHOLOMEW, A LICENSED PROFESSIONAL ARCHITECT IN THE STATE OF ARKANSAS, A-8861

BEAVER WATER DISTRICT

WESTERN CORRIDOR PUMP STATION

100% SET

REVISIONS AND RECORD OF ISSUE

DESIGNED:	RAB
DETAILED:	DAY
CHECKED:	DRH
APPROVED:	RAB
DATE:	JANUARY 24, 2023
PROJECT NO.:	405654

PUMP STATION

ARCHITECTURAL

WINDOW DETAILS

A-42-604

OF 159

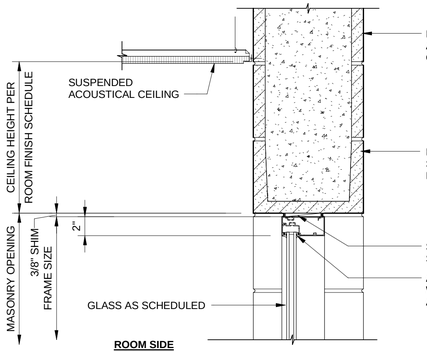

40 HEAD
1 1/2" = 1'-0"

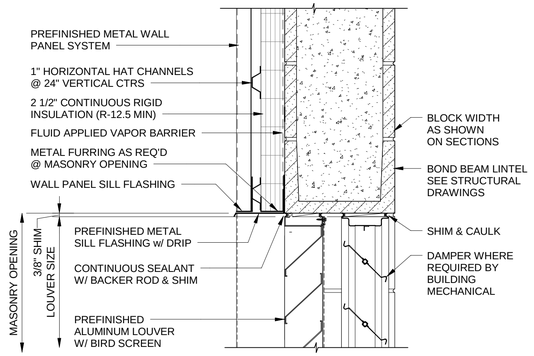

43 HEAD
1 1/2" = 1'-0"

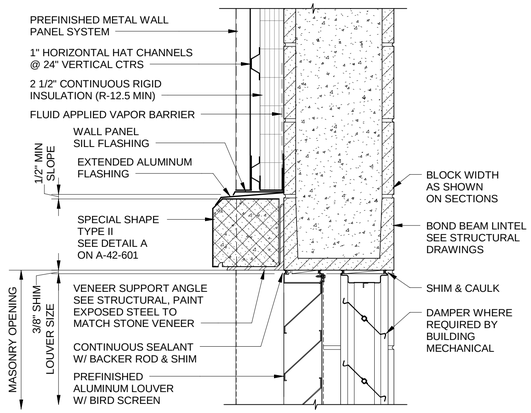

46 HEAD
1 1/2" = 1'-0"

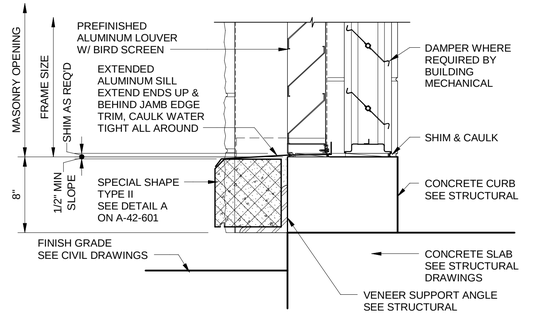

49 SILL
1 1/2" = 1'-0"

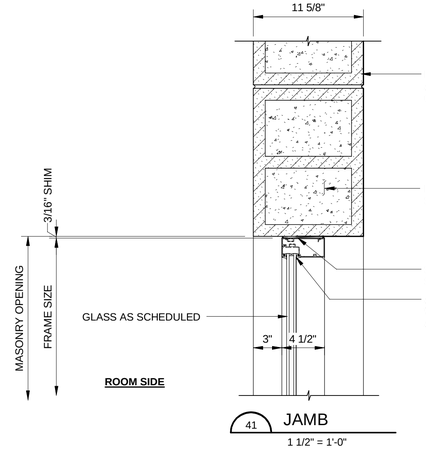

41 JAMB
1 1/2" = 1'-0"

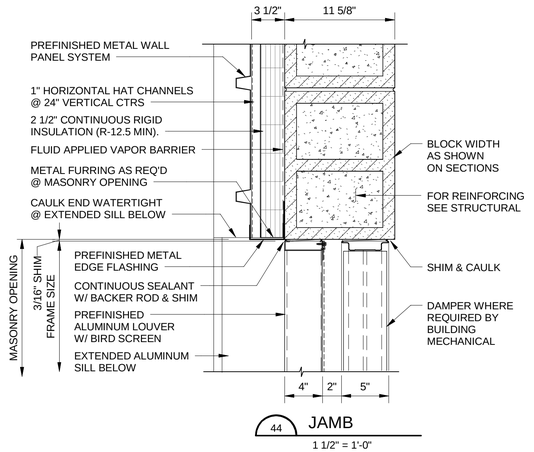

44 JAMB
1 1/2" = 1'-0"

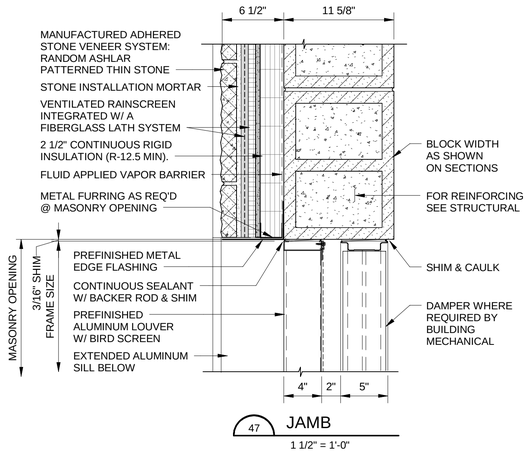

47 JAMB
1 1/2" = 1'-0"

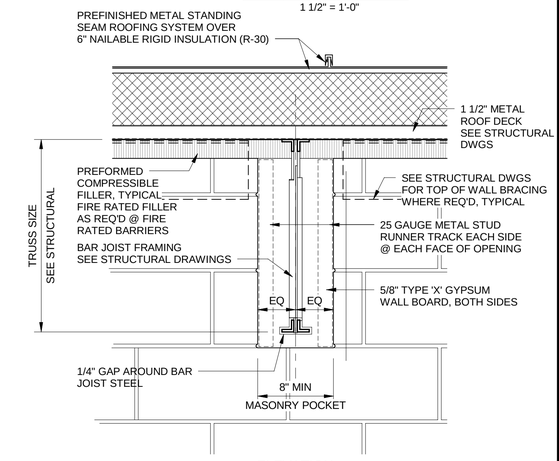

ELEVATION

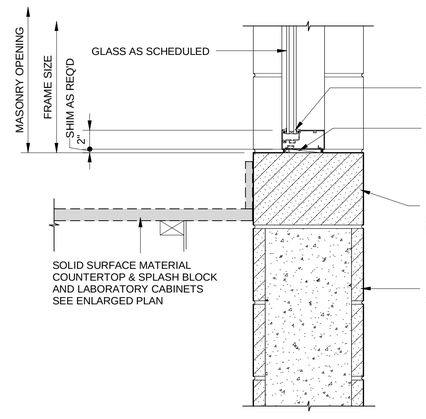

42 SILL
1 1/2" = 1'-0"

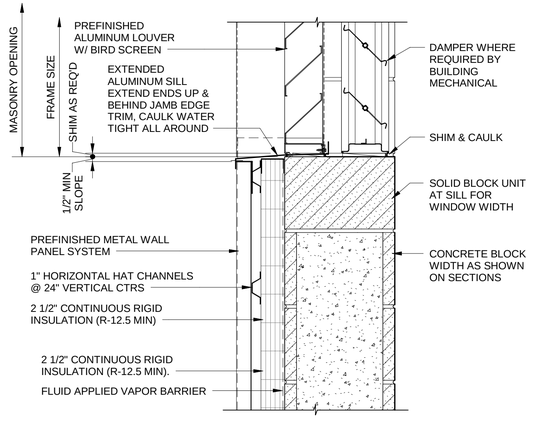

45 SILL
1 1/2" = 1'-0"

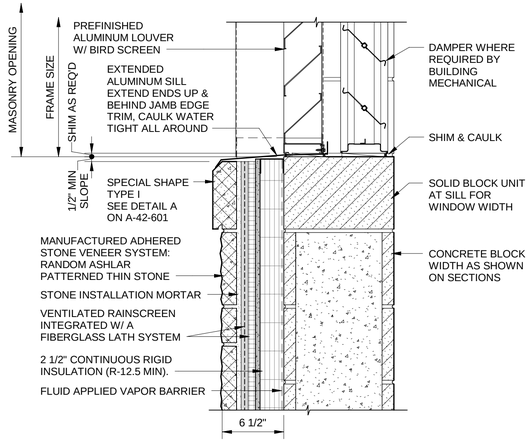

48 SILL
1 1/2" = 1'-0"

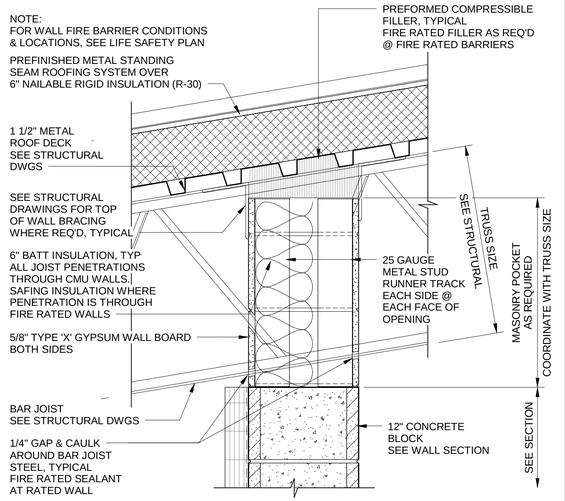

SECTION

A A-42-104 JOIST THROUGH CMU WALL
1 1/2" = 1'-0"

12" 9" 6" 3" 0" 1'
1 1/2" = 1'-0"

12" 9" 6" 3" 0"
3" = 1'-0"

(SCALE BAR IS 4" AT FULL SCALE) 0 1/2 1 2 3 4

Black & Veatch Architects Arkansas, PLLC
Overland Park, Kansas
COA: LL209

olsson

THIS DOCUMENT WAS ORIGINALLY ISSUED AND SEALED ON JANUARY 24, 2023 BY RICHARD A. BARTHOLOMEW, A LICENSED PROFESSIONAL ARCHITECT IN THE STATE OF ARKANSAS, A-8861

BEAVER WATER DISTRICT

WESTERN CORRIDOR PUMP STATION

100% SET

REVISIONS AND RECORD OF ISSUE

DESIGNED:	RAB
DETAILED:	DAY
CHECKED:	DRH
APPROVED:	RAB
DATE:	JANUARY 24, 2023
PROJECT NO.:	405654

PUMP STATION

ARCHITECTURAL

LOUVER DETAILS

A-42-605 OF 159

PLOTTED: 1/20/2023 7:35:40 AM
FILE: BIM 360://405654 - BWD Western Corridor Pump Station/405654-42-PUMP STATION.rvt
D11000

GENERAL ARCHITECTURAL NOTES

1. PERSPECTIVE VIEWS ARE FOR GENERAL REFERENCE ONLY.
2. SEE BUILDING ELEVATIONS FOR MATERIAL KEYNOTES.
3. SEE STRUCTURAL DRAWINGS FOR EQUIPMENT PADS AND CIVIL DRAWINGS FOR SIDEWALKS, CURBS & DRIVEWAYS.
4. SEE ARCHITECTURAL DRAWINGS FOR LOUVER LOCATIONS & SCHEDULED SIZES AND RESTROOM PLUMBING FIXTURE PLAN LOCATIONS.
6. SEE HVAC DRAWINGS FOR VENTILATION EQUIPMENT & DUCTWORK.
7. SEE MECHANICAL DRAWINGS FOR PROCESS PIPING.
8. FOR EXTERIOR LIGHT FIXTURES SEE ELECTRICAL DRAWINGS.

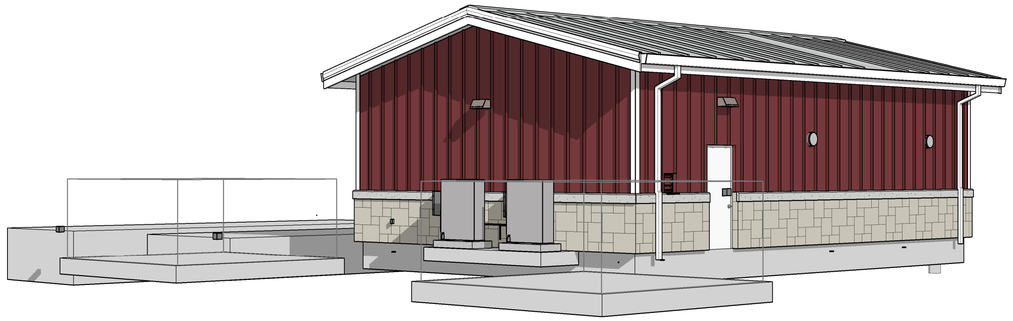

NORTHWEST PERSPECTIVE

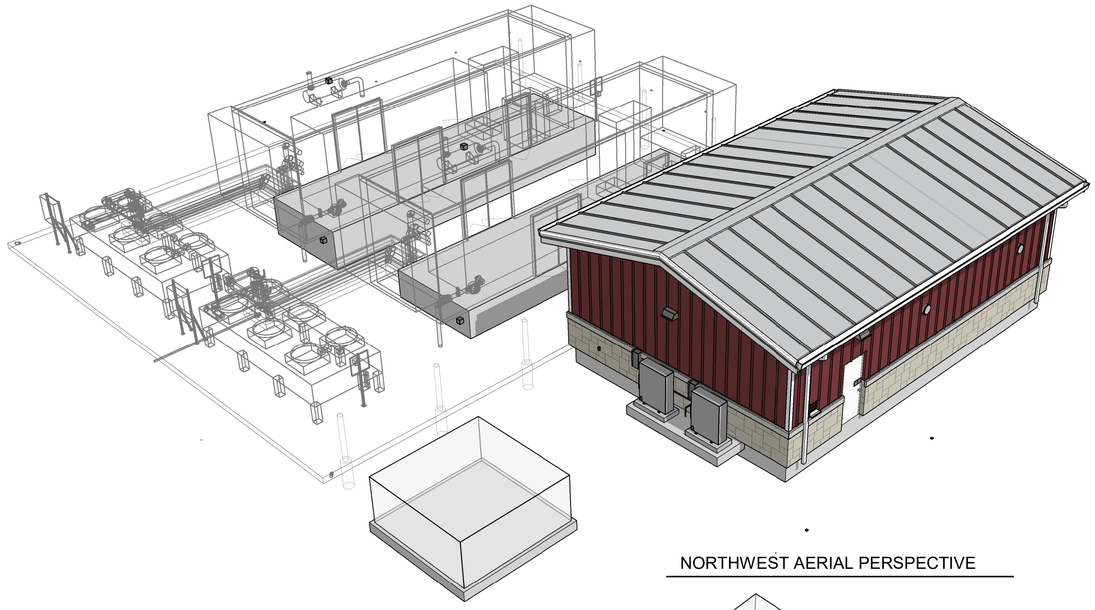

NORTHWEST AERIAL PERSPECTIVE

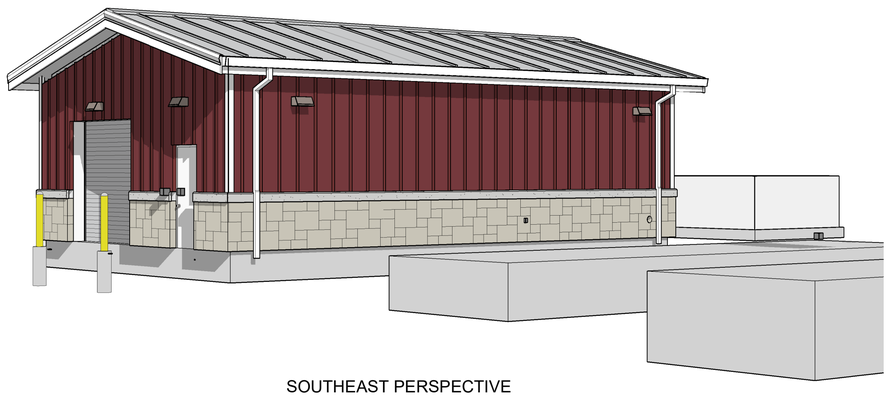

SOUTHEAST PERSPECTIVE

BLACK & VEATCH

Black & Veatch Corporation
Kansas City, Missouri

olsson

THIS DOCUMENT WAS ORIGINALLY ISSUED AND SEALED ON JANUARY 24, 2023 BY RICHARD A. BARTHOLOMEW, A LICENSED PROFESSIONAL ARCHITECT IN THE STATE OF ARKANSAS, A-8861

BEAVER WATER DISTRICT

WESTERN CORRIDOR PUMP STATION

100% SET

REVISIONS AND RECORD OF ISSUE

DESIGNED:	RAB
DETAILED:	DAY
CHECKED:	DH
APPROVED:	RAB
DATE:	JANUARY 24, 2023
PROJECT NO.:	405654

ELECTRICAL BUILDING

ARCHITECTURAL

PERSPECTIVES

A-43-101

OF 159

(SCALE BAR IS 4" AT FULL SCALE) 0 1/2 1 2 3 4

PLOTTED: 1/20/2023 2:54:51 PM
FILE: BIM 360://405654 - BWD Western Corridor Pump Station/405654-43-ELECTRICAL BUILDING.rvt
D11000

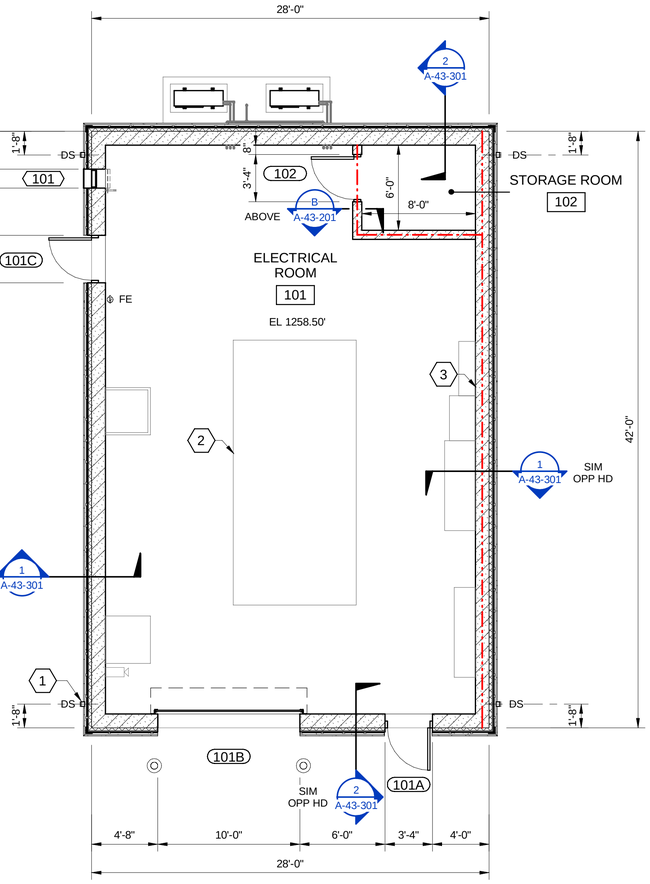

OPERATING FLOOR PLAN

3/16" = 1'-0"

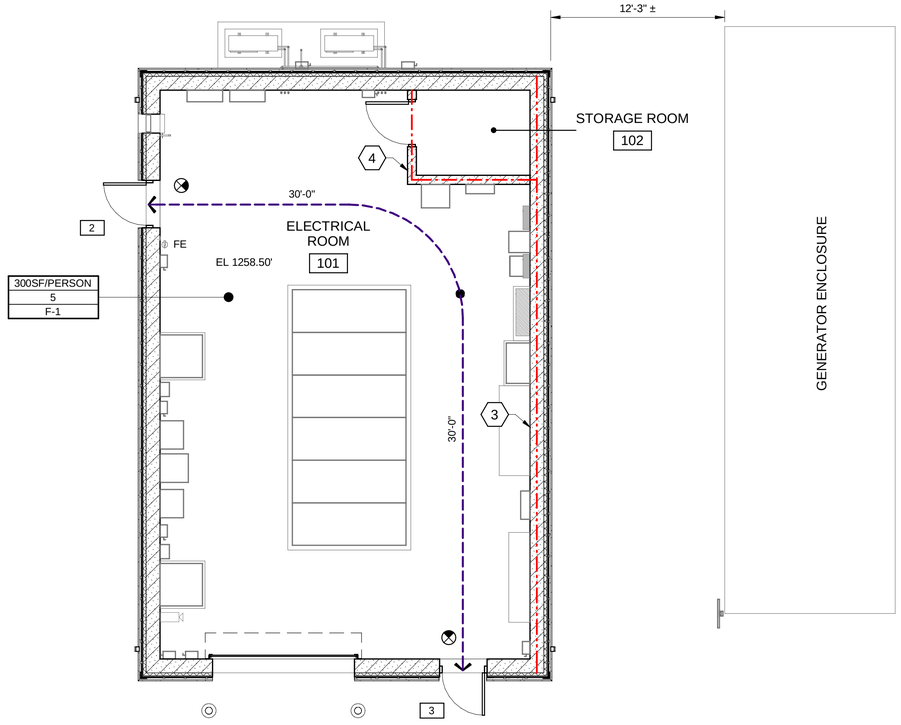

LIFE SAFETY PLAN

3/16" = 1'-0"

BUILDING CODE ANALYSIS

APPLICABLE BUILDING CODES:
- 2021 INTERNATIONAL BUILDING CODE
- 2014 ARKANSAS ENERGY CODE
- 2021 ARKANSAS FIRE PROTECTION CODE
- 2003 LIFE SAFETY CODE

BUILDING NAME	SWITCH GEAR BUILDING
TYPE OF CONSTRUCTION	TYPE II-B
OCCUPANCY	F-1
ACTUAL FLOOR AREA	1,176 SF TOTAL
ALLOWABLE AREA	15,500 SF COMPLIES W/ IBC SECTION 508.4.2 ALLOWABLE BUILDING AREA
ACTUAL HEIGHT	1 STORY (26 FT)
ALLOWABLE HEIGHT	2 STORIES (55 FT)
DESIGN OCCUPANT LOAD	5 PERSONS
EXITS PROVIDED	NO, 2
EXITS REQUIRED	2 EXITS
MAXIMUM COMMON PATH OF EGRESS TRAVEL	F-1 = 75 FT (W/O SPRINKLER SYSTEM)
MAXIMUM EXIT ACCESS TRAVEL DISTANCE	F-1 = 200 FT (W/O SPRINKLER SYSTEM)
ADA ACCESSIBILITY	NOT REQUIRED FOR F-1 OCCUPANCY TYPES PER IBC SECTION 1103.2.9 EQUIPMENT SPACES
FIRE SPRINKLERS	NO
OCCUPANCY SEPARATION	NO

GENERAL SHEET NOTES

1. WALL LAYOUT DIMENSIONS ARE TO MASONRY FACE UNLESS NOTED OTHERWISE ON PLAN.

SHEET KEYNOTES

1. PREFINISHED METAL GUTTER SYSTEM W/ DOWNSPOUT (DS), TYPICAL.
2. EQUIPMENT PAD, TYPICAL. SEE STRUCTURAL DRAWINGS.
3. 2 HOUR FIRE RATED BARRIER, TYPICAL.
4. 1 HOUR FIRE RATED BARRIER, TYPICAL.

ARCHITECTURAL SYMBOL LEGEND

101A	DOOR
101A	LOUVER
W	WINDOW
ROOM NAME 101	ROOM NAME & NUMBER

LIFE SAFETY LEGEND

FE	FIRE EXTINGUISHER (FE)
X'-X"	PATH OF EGRESS TRAVEL
300SF/PERSON 1 F-1	OCCUPANTS PER SF OCCUPANT LOAD OCCUPANCY CLASSIFICATION
1	CUMULATIVE OCCUPANT LOAD AT EXIT
	EXIT SYMBOL
	1 HOUR FIRE BARRIER
	2 HOUR FIRE BARRIER

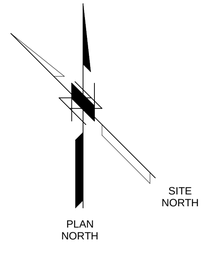

6' 4' 2' 0' 5' 10'

3/16" = 1'-0"

(SCALE BAR IS 4" AT FULL SCALE) 0 1/2 1 2 3 4

BLACK & VEATCH
Black & Veatch Corporation
Kansas City, Missouri

olsson

THIS DOCUMENT WAS ORIGINALLY ISSUED AND SEALED ON JANUARY 24, 2023 BY RICHARD A. BARTHOLOMEW, A LICENSED PROFESSIONAL ARCHITECT IN THE STATE OF ARKANSAS, A-8861

BEAVER WATER DISTRICT

WESTERN CORRIDOR PUMP STATION

100% SET

REVISIONS AND RECORD OF ISSUE

DESIGNED:	RAB
DETAILED:	DAY
CHECKED:	DH
APPROVED:	RAB
DATE:	JANUARY 24, 2023
PROJECT NO.:	405654

ELECTRICAL BUILDING

ARCHITECTURAL

LIFE SAFETY PLAN & CODE ANALYSIS AND OPERATING FLOOR PLAN

A-43-102

OF 159

PLOTTED: 1/20/2023 7:28:26 AM
FILE: BIM 360://405654 - BWD Western Corridor Pump Station/405654-43-ELECTRICAL BUILDING.rvt
D11000

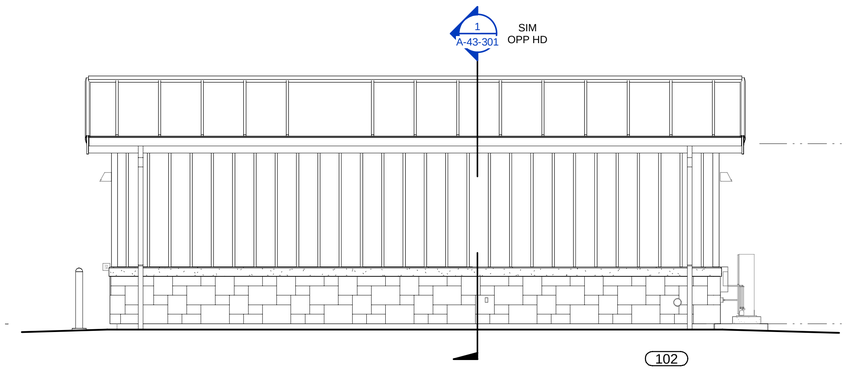

EAST ELEVATION

3/16" = 1'-0"

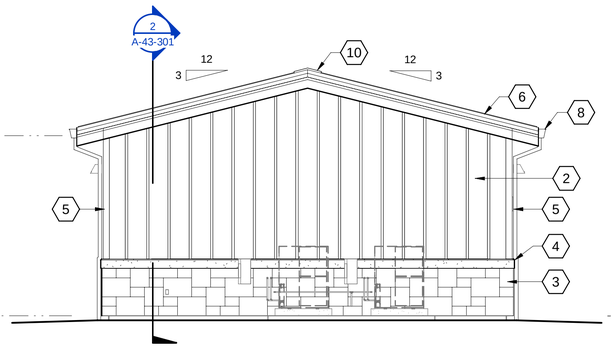

NORTH ELEVATION

3/16" = 1'-0"

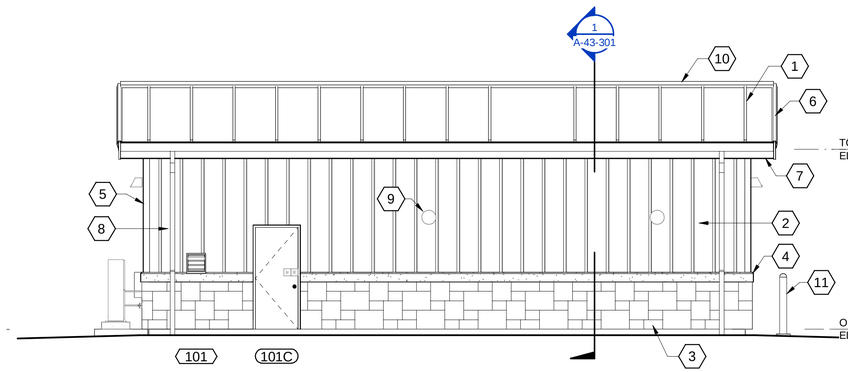

WEST ELEVATION

3/16" = 1'-0"

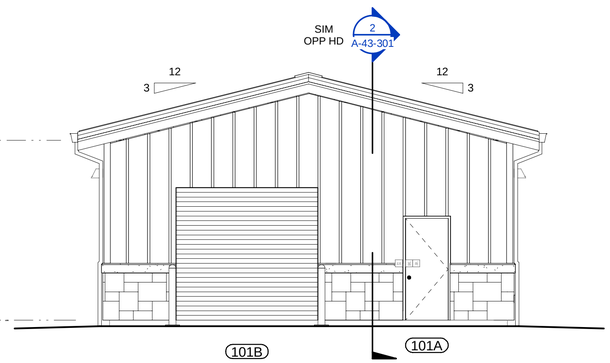

SOUTH ELEVATION

3/16" = 1'-0"

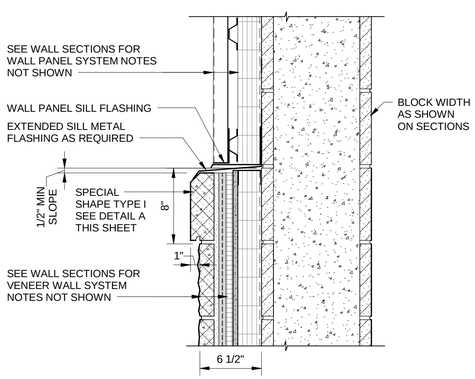

A DETAIL

A-43-301 1 1/2" = 1'-0"

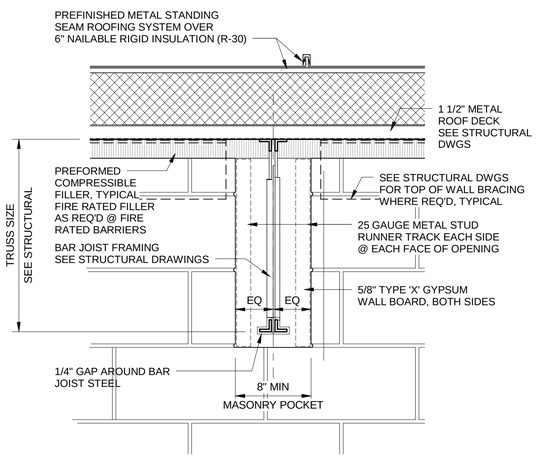

ELEVATION

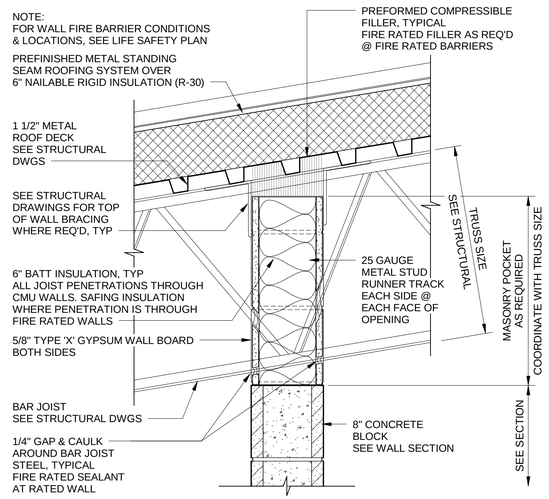

SECTION

B JOIST THROUGH CMU WALL

A-43-102 1 1/2" = 1'-0"

GENERAL SHEET NOTES

1. GENERATOR ENCLOSURE NOT SHOWN. SEE 44 SERIES DRAWINGS.

SHEET KEYNOTES

1. INSULATED METAL ROOF PANEL SYSTEM.
2. INSULATED METAL WALL PANEL SYSTEM.
3. STONE VENEER.
4. WATERTABLE.
5. PREFINISHED METAL CORNER TRIM, BY WALL PANEL MFGR. TYPICAL
6. PREFINISHED METAL RAKE TRIM BY ROOF PANEL MFGR.
7. REFINISHED METAL FASCIA.
8. PREFINSHED METAL GUTTER SYSTEM W/ DOWNSPOUTS.
9. DUCTWORK WALL PENETRATION, SEE HVAC DRAWINGS. TYPICAL OF 2.
10. PREFINISHED METAL RIDGE CAP
11. BOLLARD, SEE CIVIL DRAWINGS.

8' 4' 0' 8' 16'

1/8" = 1'-0"

12" 9" 6" 3" 0" 1'

1 1/2" = 1'-0"

(SCALE BAR IS 4" AT FULL SCALE) 0 1/2 1 2 3 4

BLACK & VEATCH

Black & Veatch Corporation
Kansas City, Missouri

olsson

THIS DOCUMENT WAS ORIGINALLY ISSUED AND SEALED ON JANUARY 24, 2023 BY RICHARD A. BARTHOLOMEW, A LICENSED PROFESSIONAL ARCHITECT IN THE STATE OF ARKANSAS, A-8861

BEAVER WATER DISTRICT

WESTERN CORRIDOR PUMP STATION

100% SET

REVISIONS AND RECORD OF ISSUE

DESIGNED:	RAB
DETAILED:	DAY
CHECKED:	DH
APPROVED:	RAB
DATE:	JANUARY 24, 2023
PROJECT NO.:	405654

ELECTRICAL BUILDING

ARCHITECTURAL

BUILDING ELEVATIONS

A-43-201

OF 159

PLOTTED: 1/20/2023 7:28:20 AM
FILE: BIM 360://405654 - BWD Western Corridor Pump Station/405654-43-ELECTRICAL BUILDING.rvt
D11000

ROOM FINISH SCHEDULE

BLDG	ROOM No.	ROOM NAME	FLOOR		WALLS												CEILING			REMARKS
					NORTH			EAST			SOUTH			WEST						
			MATRL	FINISH	MATRL	FINISH	BASE	MATRL	FINISH	BASE	MATRL	FINISH	BASE	MATRL	FINISH	BASE	MATRL	FINISH	HEIGHT	
ELECTRICAL BUILDING																				
43	101	ELECTRICAL ROOM	CO	FS	CB	PT	NO	CB	PT	NO	CB	PT	NO	CB	PT	NO	EXP	PT	12'-8"	
43	102	STORAGE ROOM	CO	FS	CB	PT	NO	CB	PT	NO	CB	PT	NO	CB	PT	NO	EXP	PT	12'-8"	

DOOR SCHEDULE (D)

BLDG	LEVEL	DOOR No. (D)	DOOR SIZE			DOOR								FRAME						REMARKS
								DETAILS			GLAZING TYPE (G)					DIMENSIONS				
				WIDTH	HEIGHT	TYPE (D)	MATERIAL	HEAD	JAMB	SILL		HDWR	RATING	TYPE (F)	MATERIAL	HEAD	WIDTH	DEPTH		
ELECTRICAL BUILDING																				
43	OPERATING LEVEL	101A		3'-0"	7'-2"	A	HM	9	10, 11	12	G0	2	-	F1	HM	2"	2"	5 3/4"		
43	OPERATING LEVEL	101B		10'-0"	9'-4"	-	RA	22	23	24	G0	11	-		RA			0"		MOTOR OPERATED
43	OPERATING LEVEL	101C		3'-0"	7'-2"	A	HM	9	10, 11	12	G0	2	-	F1	HM	2"	2"	5 3/4"		
43	OPERATING LEVEL	102		3'-0"	7'-2"	A	HM	19	20	21	G0	8	45 MIN	F1	HM	2"	2"	5 3/4"		

LOUVER SCHEDULE (L) 2021

BLDG	LEVEL	LOUVER No. (L)	OPENING		LOUVER					REMARKS
			WIDTH	HEIGHT	TYPE	HEAD	JAMB	SILL	TOP ELEV AFF	
ELECTRICAL BUILDING										
43	OPERATING LEVEL	101	1'-4"	1'-4"	ALUM	43	44	48	5'-4"	COLOR TO MATCH METAL WALL PANELS

GLAZING SCHEDULE (G)

GLAZING TYPE (G)	DESCRIPTION
G0	NO GLAZING

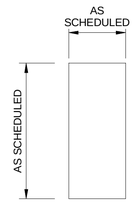

A

DOOR TYPES

1/4" = 1'-0"

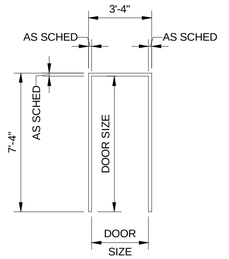

FRAME TYPE F1

1/4" = 1'-0"

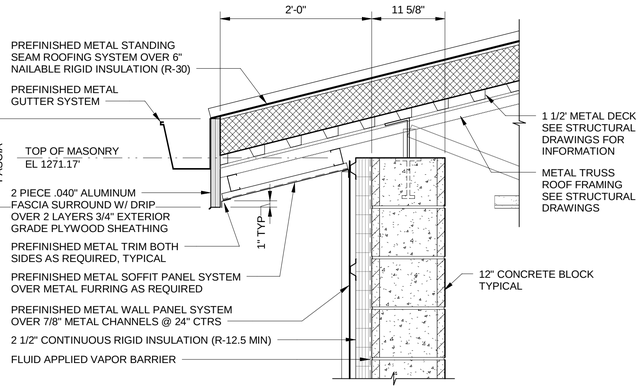

A A-43-301 TYPICAL FASCIA EDGE

1" = 1'-0"

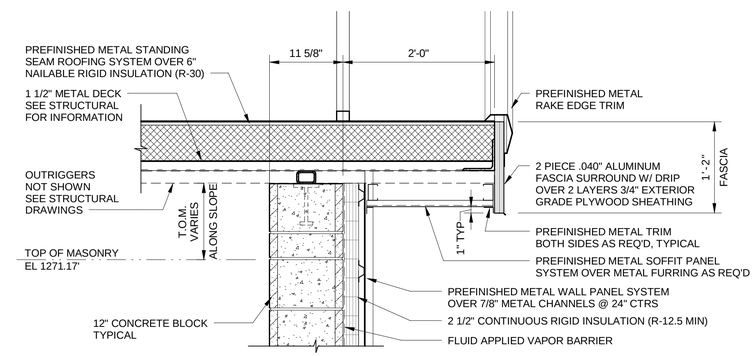

B A-43-301 TYPICAL RAKE EDGE

1" = 1'-0"

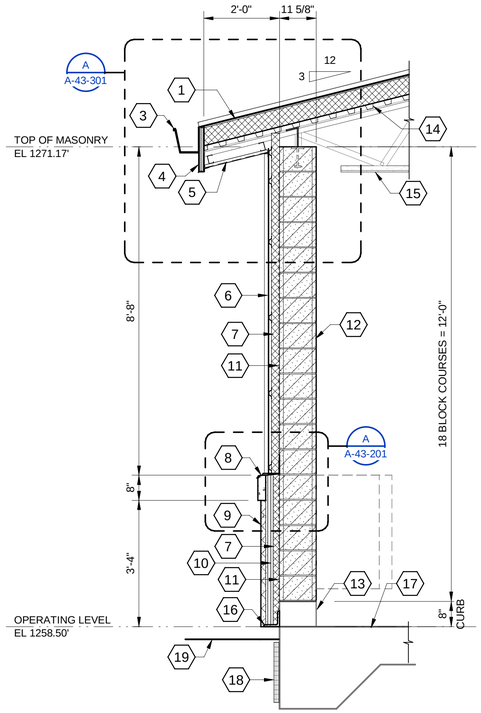

1 A-43-102 SECTION

1/2" = 1'-0"

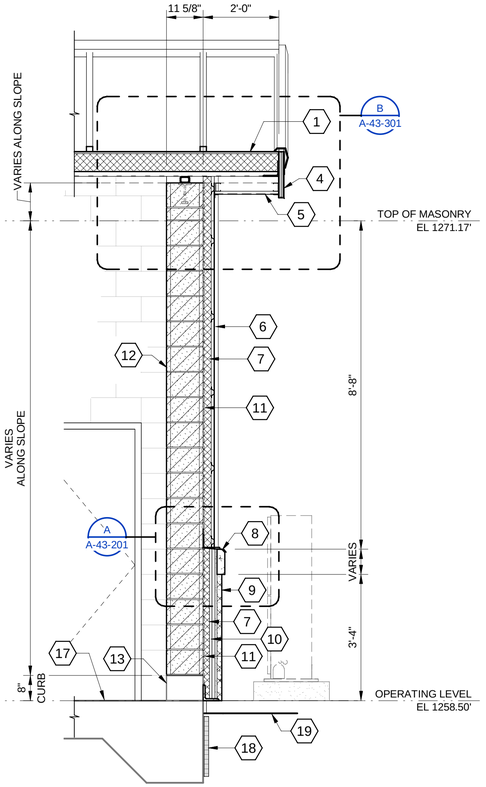

2 A-43-102 SECTION

1/2" = 1'-0"

GENERAL SHEET NOTES

1. WALL LAYOUT DIMENSIONS ARE TO MASONRY FACE UNLESS NOTED OTHERWISE ON PLAN.
2. FOR VERTICAL REINFORCING AND BOND BEAMS IN MASONRY DESIGN, SEE STRUCTURAL DRAWINGS.
3. FOR HORIZONTAL JOINT REINFORCING, SEE SPECIFICATION SECTION 04200.
4. FOR SCHEDULE REFERENCED DOOR & LOUVER DETAILS: SEE DRAWINGS A-43-602 THROUGH A-42-605.

ARCHITECTURAL ABBREVIATIONS

AL - ACTIVE LEAF	HM - HOLLOW METAL
ALUM - ACTIVE LEAF	NO - NONE
CB - CONCRETE BLOCK	PT - PAINTED
CO - CONCRETE	RA - ROLLING ALUMINUM
DS - DOWNSPOUT	VTR - VENT THROUGH ROOF
EP - EPOXY PAINT	
EXP - EXPOSED CONSTRUCTION	
FE - FIRE EXTINGUISHER	
FF - FACTORY FINISH	
FS - FLOOR SEALER	

SHEET KEYNOTES

1. PREFINISHED METAL STANDING SEAM ROOFING SYSTEM OVER 6" NAILABLE RIGID INSULATION (R-30) ON METAL DECK.
2. NOT USED.
3. PREFINISHED METAL GUTTER SYSTEM W/ DOWNSPOUTS.
4. PREFINISHED METAL FASCIA / RAKE.
5. PREFINISHED METAL SOFFIT PANELS OVER METAL FURRING AS REQUIRED.
6. PREFINISHED METAL WALL PANELS ON 1" HORIZONTAL HAT CHANNELS @ 24" VERTICAL CTRS.
7. 2 1/2" CONTINUOUS RIGID INSULATION (R-12.5 MIN).
8. CAST STONE BANDING.
9. MANUFACTURED ADHERED STONE VENEER SYSTEM: RANDOM ASHLAR PATTERNED THIN STONE OVER A FORTIFIED MORTAR BED ON A VENTILATED RAINSCREEN INTEGRATED W/ A FIBERGLASS LATH SYSTEM.
10. 1/2" CEMENT BOARD.
11. FLUID APPLIED VAPOR BARRIER.
12. 12" CONCRETE BLOCK, TYPICAL.
13. CONCRETE CURB, SEE STRUCTURAL DRAWINGS..
14. METAL ROOF DECK, SEE STRUCTURAL DRAWINGS.
15. METAL ROOF FRAMING, SEE STRUCTURAL DRAWINGS.
16. VENEER SUPPORT ANGLE, SEE STRUCTURAL DRAWINGS.
17. CONCRETE SLAB & FOUNDATION, SEE STRUCTURAL DRAWINGS.
18. 1 1/2" FOUNDATION INSULATION (R-7.5).
19. FINISH GRADE, SEE CIVIL DRAWINGS.

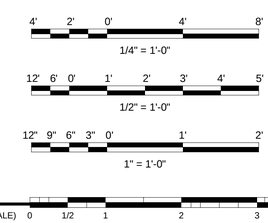

(SCALE BAR IS 4" AT FULL SCALE) 0 1/2 1 2 3 4

BLACK & VEATCH

Black & Veatch Corporation
Kansas City, Missouri

olsson

THIS DOCUMENT WAS ORIGINALLY ISSUED AND SEALED ON JANUARY 24, 2023 BY RICHARD A. BARTHOLOMEW, A LICENSED PROFESSIONAL ARCHITECT IN THE STATE OF ARKANSAS, A-8861

BEAVER WATER DISTRICT

WESTERN CORRIDOR PUMP STATION

100% SET

REVISIONS AND RECORD OF ISSUE

DESIGNED:	RAB
DETAILED:	DAY
CHECKED:	DH
APPROVED:	RAB
DATE:	JANUARY 24, 2023
PROJECT NO.:	405654

ELECTRICAL BUILDING

ARCHITECTURAL

SECTIONS & SCHEDULES

A-43-301

OF 159

PLOTTED: 1/20/2023 7:28:16 AM
FILE: BIM 360://405654 - BWD Western Corridor Pump Station/405654-43-ELECTRICAL BUILDING.rvt
D11000

STRUCTURAL NOTES

GENERAL

1. THE APPLICABLE BUILDING CODE IS INDICATED ON THE LOADING CRITERIA DRAWING.
2. THE REQUIREMENTS INDICATED ON THIS SHEET ARE INTENDED AS A BASIC SUMMARY OF THE MATERIAL AND CONSTRUCTION REQUIREMENTS FOR THE PROJECT. ADDITIONAL, MORE STRINGENT REQUIREMENTS ARE GIVEN IN THE PROJECT DETAIL DRAWINGS AND SPECIFICATIONS.
3. ALL STRUCTURAL RELATED SHOP DRAWINGS SHALL BE REVIEWED BY THE ENGINEER PRIOR TO CONSTRUCTION.
4. STRUCTURES MAY BE BUOYANT WHEN EMPTY DURING CONSTRUCTION. CONTRACTOR SHALL PROTECT STRUCTURES AGAINST FLOTATION UNTIL CONSTRUCTION IS COMPLETE. .
5. STRUCTURES MAY BE UNSTABLE UNTIL THEY ARE CONSTRUCTED IN THIER ENTIRETY. CONTRACTOR IS RESPONSIBLE FOR DESIGNING TEMPORARY STRUCTURAL SUPPORTS TO RESIST WIND LOADS, CONSTRUCTION LOADS, AND ANY OTHER TEMPORARY CONDITIONS THAT MAY OCCUR DURING CONSTRUCTION, IN ORDER TO MAINTAIN STABILITY OF THE CONSTRUCTION WORK. ANCHORS FOR CONTRACTOR'S TEMPORARY SUPPORT SYSTEMS THAT ATTACH TO CONCRETE OR MASONRY SHALL BE LOCATED TO AVOID DAMAGING EMBEDDED REINFORCEMENT OR UTILITIES.

CAST-IN-PLACE CONCRETE

1. A MINIMUM 28 DAY COMPRESSIVE STRENGTH (f'c) OF 4,000 PSI WAS UTILIZED IN THE DESIGN OF STRUCTURAL REINFORCED CONCRETE. SEE SPECIFICATIONS FOR CONSTRUCTION STRENGTH REQUIREMENTS.
2. THE LOCATION OF ALL CONSTRUCTION JOINTS AND OTHER TYPES OF JOINTS, OTHER THAN THOSE SPECIFIED OR SHOWN ON THE PLANS, SHALL BE ACCEPTABLE TO THE ENGINEER PRIOR TO PLACING CONCRETE.

REINFORCING STEEL

1. ALL REINFORCING BAR SHALL BE GRADE 60, DEFORMED, ASTM A615, UNLESS NOTED OTHERWISE.
2. DIMENSIONS TO REINFORCING BARS ARE TO BAR CENTERLINES, UNLESS NOTED OTHERWISE. BAR COVER IS THE CLEAR DISTANCE BETWEEN THE BAR AND THE CONCRETE SURFACE.
3. NO WELDING OF REINFORCING BARS SHALL BE PERMITTED UNLESS APPROVAL IS OBTAINED FROM THE ENGINEER PRIOR TO CONSTRUCTION.
4. FOR CONCRETE SLABS THAT HAVE A SLOPING TOP FACE, THE TOP LAYERS OF REINFORCEMENT SHALL BE PLACED ON A SIMILAR SLOPE SO THAT SPECIFIED COVER IS MAINTAINED.

POST-INSTALLED ANCHORS

1. POST-INSTALLED ANCHORS SHALL INCLUDE ADHESIVE ANCHORS (THREADED RODS, BOLTS OR REINFORCING BARS), EXPANSION ANCHORS, AND UNDERCUT ANCHORS INSTALLED INTO HARDENED CONCRETE OR MASONRY. SEE THE ANCHORAGE IN CONCRETE AND MASONRY SPECIFICATION SECTION FOR ADDITIONAL REQUIREMENTS.
2. POST-INSTALLED ANCHORS SHALL ONLY BE USED WHERE INDICATED ON THE DRAWINGS. CONTRACTOR SHALL OBTAIN APPROVAL FROM ENGINEER PRIOR TO USING POST-INSTALLED ANCHORS FOR MISSING OR MISPLACED CAST-IN-PLACE ANCHORS.
3. CARE SHALL BE TAKEN TO AVOID CONFLICTS WITH EXISTING REINFORCING STEEL AND OTHER EMBEDDED ITEMS WHEN DRILLING HOLES. REINFORCING BARS SHALL NOT BE DAMAGED DURING DRILLING OR ANCHOR INSTALLATION. HOLES SHALL BE DRILLED AND CLEANED PER THE PRODUCT MANUFACTURER'S INSTRUCTIONS. ANCHORS SHALL BE INSTALLED PER THE PRODUCT MANUFACTURER'S INSTRUCTIONS AT NOT LESS THAN MINIMUM EDGE DISTANCES AND/OR SPACING INDICATED IN THE MANUFACTURER'S LITERATURE.
4. SUBSTITUTION REQUESTS FOR PRODUCTS OTHER THAN THOSE LISTED IN THE SPECIFICATION OR INDICATED ON THE DRAWINGS SHALL BE SUBMITTED TO ENGINEER FOR REVIEW AND APPROVAL. PRODUCT ICC-ESR EVALUATION REPORTS SHALL BE INCLUDED WITH THE SUBMITTAL PACKAGE. IF REQUESTED, CALCULATIONS PREPARED BY A REGISTERED PROFESSIONAL ENGINEER USING METHODS AND PROCEDURES REQUIRED BY THE BUILDING CODE MAY BE REQUIRED AS PART OF THE SUBMITTAL PACKAGE.
5. UNLESS NOTED OTHERWISE, THE MINIMUM EMBEDMENT PROVIDED FOR ADHESIVE ANCHORED REINFORCING BARS SHALL DEVELOP THE FULL TENSILE STRENGTH OF THE BAR.
6. SPECIAL INSPECTION WILL BE PROVIDED FOR ALL POST-INSTALLED ANCHORS.

STAINLESS STEEL

1. STAINLESS STEEL BOLTS SHALL CONFORM TO ASTM F593, ALLOY GROUP 1 OR 2, UNLESS NOTED OTHERWISE. MINIMUM YIELD STRENGTH SHALL BE 45 KSI.
2. STAINLESS STEEL PLATES SHALL CONFORM TO ASTM A240, TYPE 316L.
3. STAINLESS STEEL STRUCTURAL SHAPES SHALL CONFORM TO ASTM A1069 OR ASTM A276, TYPE 316L.

ALUMINUM

1. UNLESS NOTED OTHERWISE, ALUMINUM ALLOY IN ALL ALUMINUM STRUCTURAL MATERIALS SHALL BE 6061-T6. PIPE AND TUBING FOR GUARDRAIL AND HANDRAIL SHALL BE ALLOY 6061-T6 OR 6005A-T61.
2. ALL ALUMINUM SURFACES IN CONTACT WITH CONCRETE OR DISSIMILAR METALS SHALL BE COATED OR COVERED WITH A HEAVY COAT OF BITUMINOUS PAINT TO PREVENT ALUMINUM-CONCRETE REACTION OR ELECTROLYTIC ACTION.

MASONRY

1. CONCRETE MASONRY UNITS SHALL CONFORM TO ASTM C90. THE TOTAL MASONRY ASSEMBLAGE SHALL HAVE A COMPRESSIVE STRENGTH EQUAL TO 2500 PSI AT 28 DAYS.
2. MASONRY MORTAR SHALL CONFORM TO ASTM C270, TYPE S.
3. ALL BOND BEAMS AND ANY BLOCK CELLS CONTAINING REINFORCING STEEL SHALL, ANCHORS OR OTHER EMBEDMENTS SHALL BE FILLED WITH GROUT MEETING THE REQUIREMENTS OF ASTM C476. WALLS SHALL BE FULLY GROUTED WHEN INDICATED ON THE DRAWINGS.
4. BOND BEAM REINF SHALL BE CONTINUOUS AT CORNERS, INTERSECTIONS AND CONTROL JOINTS.

EXCAVATION, BACKFILL, AND FOUNDATIONS

1. FOUNDATION CONSTRUCTION SHALL NOT BEGIN UNTIL ANY REQUIRED SPECIAL INSPECTION HAS BEEN COMPLETED AND THE CONTRACTOR NOTIFIED TO PROCEED.
2. TO FACILITATE SCHEDULING, AT LEAST 48 HOURS ADVANCE NOTICE SHALL BE GIVEN TO THE ENGINEER PRIOR TO THE REQUIRED INSPECTIONS.
3. UNLESS NOTED OTHERWISE, BACKFILL SHALL NOT BE PLACED AGAINST WALLS WHICH SUPPORT A CONCRETE SLAB OR WALKWAY UNTIL THE TOP SLAB OR WALKWAY HAS BEEN PLACED IN ITS ENTIRETY AND ALL CONCRETE HAS REACHED THE SPECIFIED DESIGN STRENGTH.
4. OVER-EXCAVATION OF SOIL, OR OVER-BREAKING OF ROCK, THAT WOULD RESULT IN A STRUCTURAL CONCRETE THICKNESS GREATER THAN INDICATED ON THE DRAWINGS SHALL BE CLASSIFIED AS UNAUTHORIZED EXCAVATION. CONTRACTOR SHALL SELECT ONE OF TWO METHODS TO ADDRESS UNAUTHORIZED EXCAVATION.
   - REPLACE UNAUTHORIZED EXCAVATION MATERIAL WITH LEAN CONCRETE THAT IS PLACED SEPARATELY FROM THE STRUCTURAL CONCRETE INDICATED ON THE DRAWINGS. CONTRACTOR WILL RECEIVE NO ADDITIONAL PAYMENT FOR THE LEAN CONCRETE.
   - REPLACE UNAUTHORIZED EXCAVATION MATERIAL WITH STRUCTURAL CONCRETE THAT IS PLACED MONOLITHICALLY WITH THE STRUCTURAL CONCRETE INDICATED ON THE DRAWINGS, CREATING AN ENLARGED SECTION. CONTRACTOR SHALL NOTIFY ENGINEER FOR DIRECTION PRIOR TO PERFORMING THIS WORK. THE INCREASED CONCRETE THICKNESS MAY REQUIRE ADDITIONAL REINFORCEMENT AND/OR OTHER DESIGN MODIFICATIONS. IF THE INCREASED CONCRETE THICKNESS EXCEEDS 36 INCHES, ENGINEER MAY REQUIRE CONTRACTOR TO IMPLEMENT MASS CONCRETE HEAT MITIGATION PROCEDURES. CONTRACTOR WILL RECEIVE NO ADDITIONAL PAYMENT FOR EXTRA STRUCTURAL CONCRETE, ADDITIONAL REINFORCEMENT, OTHER DESIGN MODIFICATIONS, OR MASS CONCRETING PROCEDURES.
5. THE FOLLOWING NET ALLOWABLE BEARING PRESSURES WERE UTILIZED IN THE DESIGN OF THE FOUNDATIONS.

   SPREAD FOOTINGS.....2500 PSF
   MAT FOUNDATIONS.....2000 PSF

SPECIAL INSPECTIONS

1. CODE REQUIRED SPECIAL INSPECTIONS AND TESTS WILL BE CONDUCTED BY APPROVED AGENCIES EMPLOYED BY THE OWNER IN ACCORDANCE WITH THE APPLICABLE BUILDING CODE.
2. THE STATEMENT OF SPECIAL INSPECTIONS WILL BE PREPARED BY THE REGISTERED DESIGN PROFESSIONAL IN RESPONSIBLE CHARGE DURING CONSTRUCTION.
3. EACH CONTRACTOR RESPONSIBLE FOR THE CONSTRUCTION OF A MAIN WIND OR SEISMIC FORCE RESISTING SYSTEM, DESIGNATED SEISMIC SYSTEM OR A WIND OR SEISMIC RESISTING COMPONENT LISTED IN THE STATEMENT OF SPECIAL INSPECTIONS SHALL SUBMIT A WRITTEN STATEMENT OF RESPONSIBILITY TO THE BUILDING OFFICIAL AND OWNER PRIOR TO COMMENCEMENT OF WORK ON THE SYSTEM OR COMPONENT.
4. SEE THE QUALITY CONTROL SECTION AND THE CODE REQUIRED SPECIAL INSPECTIONS AND PROCEDURES SECTION OF THE SPECIFICATIONS FOR FURTHER CLARIFICATION OF RESPONSIBILITIES.

DELEGATED DESIGN

1. THE FOLLOWING ITEMS ARE IDENTIFIED IN THE DRAWINGS AND SPECIFICATIONS AS BEING DESIGNED AND SEALED BY OTHERS. SUBMITTALS FOR THESE ITEMS SHALL BE PREPARED BY THE SUPPLIERS AND SUBMITTED TO ENGINEER AND CODE OFFICIAL FOR REVIEW.

   SECTION 01611 - EQUIPMENT AND NON-STRUCTURAL COMPONENTS.
   SECTION 05210 - STEEL JOISTS.
   SECTION 05520 - METAL RAILING.
   SECTION 13122 - METAL BUILDING SYSTEMS.
   SECTION 05400 - COLD-FORMED METAL FRAMING

STRUCTURAL STEEL

1. ROLLED WIDE FLANGE SHAPES SHALL HAVE A MINIMUM YIELD STRENGTH OF 50 KSI;
   CHANNELS, PLATES AND ANGLES A MINIMUM OF 36 KSI;
   STRUCTURAL PIPES A MINIMUM OF 35 KSI
   ROUND STRUCTURAL TUBES A MINIMUM OF 46 KSI.
   RECTANGULAR STRUCTURAL TUBES A MINIMUM OF 50 KSI.
2. WELDING SHALL BE DONE WITH A FILLER MATERIAL HAVING A MINIMUM TENSILE STRENGTH OF 70 KSI.
3. BOLTED CONNECTIONS SHALL USE 3/4" DIA ASTM F3125, GRADE A325 BOLTS OR GRADE F1852 TWIST-OFF BOLTS, WITH THE THREADS EXCLUDED FROM THE SHEAR PLANE, UNLESS NOTED OTHERWISE.
4. CARBON STEEL OR GALVANIZED STEEL ANCHOR RODS AND ANCHOR BOLTS SHALL CONFORM TO ASTM F1554 GRADE 36.
5. HOLES FOR ANCHOR RODS AND ANCHOR BOLTS IN COLUMN BASE PLATES USING ASTM F844 OR F436 FLAT CIRCULAR WASHERS SHALL BE AS FOLLOWS:

   BOLTS/RODS 3/4" TO 1" - 5/16" OVERSIZE
   BOLTS/RODS 1" TO 2" - 1/2" OVERSIZE
   BOLTS/RODS 2" - 1" OVERSIZE

   AT THE CONTRACTORS OPTION, OVERSIZE HOLES LARGER THAN THOSE LISTED ABOVE MAY BE USED, PROVIDED THAT 3/8" PLATE WASHERS ARE USED WITH STANDARD HOLES AND FIELD WELDED WITH A 5/16" FILLET WELDED TO THE BASE PLATE ALONG A MIN OF 3 SIDES.

BLACK & VEATCH
Black & Veatch Corporation
Kansas City, Missouri

olsson

THIS DOCUMENT WAS ORIGINALLY ISSUED AND SEALED ON JANUARY 24, 2023 BY DOUGLAS L. DUNCAN, A LICENSED PROFESSIONAL ENGINEER IN THE STATE OF ARKANSAS, E-18748

BEAVER WATER DISTRICT

WESTERN CORRIDOR PUMP STATION

100% SET

REVISIONS AND RECORD OF ISSUE

DESIGNED:	KB/DLD
DETAILED:	PP
CHECKED:	BSB
APPROVED:	DLD
DATE:	JANUARY 24, 2023
PROJECT NO.:	405654

PUMP STATION

STRUCTURAL

GENERAL NOTES

S-00-001

OF 159

(SCALE BAR IS 4" AT FULL SCALE) 0 1/2 1 2 3 4

PLOTTED: 1/20/2023 10:55:23 AM
FILE: BIM 360://405654 - BWD Western Corridor Pump Station/405654-42-PUMP STATION.rvt
D1:1000

BASIC LOADING CRITERIA

THE APPLICABLE BUILDING CODE IS THE 2021 INTERNATIONAL BUILDING CODE (IBC).

1. DEAD LOAD ..... CALCULATED

2. LIVE LOADS:
   - OPERATING FLOORS ..... 150 PSF
   - WALKWAYS, PLATFORMS, STAIRS ..... 100 PSF
   - ELEVATED EQUIPMENT PLATFORMS (NON-EGRESS) ..... 60 PSF
   - STORAGE, GENERAL ..... 250 PSF
   - CONTROL ROOM FLOORS ..... 250 PSF
   - ORDINARY ROOF LIVE LOAD ..... 20 PSF MINIMUM (NO REDUCTION TAKEN)

3. LATERAL EARTH PRESSURE (EQUIVALENT FLUID PRESSURE)
   - NON-SATURATED ..... 70 PSF/FT
   - SATURATED ..... 100 PSF/FT

4. LATERAL SURCHARGE ..... EQUIVALENT TO 2 FEET OF SOIL WHERE ADJACENT TO A ROADWAY

5. COMPACTIVE SURCHARGE LOAD ..... 400 PSF AT FINISH GRADE ELEVATION DECREASING LINEARLY AT SAME RATE AS BACKFILL LOAD INCREASES. FOR WALLS 8 FEET OR LESS IN HEIGHT, USE CRITERIA 4 ABOVE AS COMPACTIVE SURCHARGE.

6. HYDROSTATIC FLUID PRESSURE ..... 63 PSF/FT

7. SNOW LOAD:
   - GROUND SNOW LOAD (P_g) ..... 10 PSF
   - SNOW EXPOSURE FACTOR (C_e) 0.9

8. SEISMIC LOAD:
   - MAPPED MCE SHORT PERIOD SPECTRAL RESPONSE ACCELERATION (S_S) 0.163g
   - MAPPED MCE ONE SECOND PERIOD SPECTRAL RESPONSE ACCELERATION (S_1) 0.091g
   - DESIGN SPECTRAL RESPONSE ACCELERATION AT SHORT PERIODS (S_{DS}) 0.174g
   - DESIGN SPECTRAL RESPONSE ACCELERATION AT ONE SECOND PERIOD (S_{D1}) 0.146g
   - SOIL SITE CLASS ..... D

9. WIND LOAD:
   - ULTIMATE DESIGN WIND SPEED ..... 120 MPH
   - NOMINAL DESIGN WIND SPEED ..... 95 MPH
   - EXPOSURE C

10. 100 YEAR FLOOD ELEVATION ..... ZONE X

SNOW AND SEISMIC LOADING CRITERIA	PUMP STATION	ELECTRICAL CONTROL ROOM	ELECTRICAL BUILDING
RISK CATEGORY	IV	IV	III
FLAT-ROOF SNOW LOAD (P_F), PSF	12	12	11
SNOW DRIFT SURCHARGE LOAD (P_d), PSF	31	31	21.2
SNOW DRIFT WIDTH (W), FEET	8.11	8.11	5.55
SNOW IMPORTANCE FACTOR (I_S)	1.1	1.1	1.1
THERMAL FACTOR (C_t)	1.1	1.1	1.0
SEISMIC IMPORTANCE FACTOR	1.5	1.5	1.25
SEISMIC DESIGN CATEGORY	C	C	B
BASIC SEISMIC FORCE RESISTING SYSTEM	PEMB MOMENT FRAME IN NORTH-SOUTH DIRECTION AND BRACED FRAME IN EAST-WEST DIRECTION	ORDINARY REINFORCED MASONRY SHEAR WALL	ORDINARY REINFORCED MASONRY SHEAR WALL
STRENGTH DESIGN BASE SHEAR, KIPS	77	77	40
SEISMIC RESPONSE COEFFICIENT (C_S)	0.091 W	0.091 W	0.109 W
RESPONSE MODIFICATION FACTOR (R)	2.0	2.0	2.0
SEISMIC ANALYSIS PROCEDURE	EQUIVALENT LATERAL FORCE	EQUIVALENT LATERAL FORCE	EQUIVALENT LATERAL FORCE

PUMP STATION

PUMP ROOM

INTERNAL PRESSURE COEFFICIENT ..... ±0.55

DIMENSION "a" ..... 11'-1"

ROOF TYPE 4

COMPONENT AND CLADDING WIND PRESSURES, PSF

EFFECTIVE WIND AREA (SQR FT) →		<=2	4	10	20	50	100	200	500	1000+
ROOF NEG PRESSURE, ZONES 1, 2E		-77.2	-77.2	-77.2	-77.2	-51.3	-31.8	-31.8	-31.8	-31.8
ROOF NEG PRESSURE, ZONES 2N, 2R, 3E		-107.4	-107.4	-107.4	-94.4	-77.2	-64.1	-51.1	-46.9	-46.9
ROOF NEG PRESSURE, ZONES 3R		-125.6	-125.6	-125.6	-109.2	-87.5	-71.1	-71.1	-71.1	-71.1
ROOF POS PRESSURE, ALL ZONES		37.8	35.7	32.8	30.7	27.9	25.7	25.7	25.7	25.7
ROOF OVERHANG PRESSURE ZONES 1, 2E		-92.3	-92.3	-92.3	-92.3	-75.1	-62.0	-62.0	-62.0	-62.0
ROOF OVERHANG PRESSURE ZONES 2N, 2R		-122.5	-122.5	-122.5	-112.8	-99.9	-90.1	-80.3	-77.2	-77.2
ROOF NEG PRESSURE ZONES 3E		-140.7	-140.7	-140.7	-123.8	-101.4	-84.4	-67.5	-62.0	-62.0
ROOF NEG PRESSURE ZONES 3R		-158.9	-158.9	-158.9	-137.0	-108.1	-86.2	-86.2	-86.2	-86.2
WALL ZONE 4	(+)	46.9	46.9	46.9	45.3	43.2	41.6	39.9	37.8	37.8
	(-)	-49.9	-49.9	-49.9	-48.3	-46.2	-44.6	-43.0	-40.8	-40.8
WALL ZONE 5	(+)	46.9	46.9	46.9	45.3	43.2	41.6	39.9	37.8	37.8
	(-)	-59.0	-59.0	-59.0	-55.8	-51.5	-48.3	-45.1	-40.8	-40.8

ELECTRICAL/CONTROL ROOM

INTERNAL PRESSURE COEFFICIENT ..... ±0.55

DIMENSION "a" ..... 3'-0"

ROOF TYPE 1

COMPONENT AND CLADDING WIND PRESSURES, PSF

EFFECTIVE WIND AREA (SQR FT) →		<=2	4	10	20	50	100	200	500	1000+
ROOF NEG PRESSURE, ZONES 1, 2E		-67.8	-67.8	-67.8	-67.8	-45.1	-27.9	-27.9	-27.9	-27.9
ROOF NEG PRESSURE, ZONES 2N, 2R, 3E		-94.4	-94.4	-94.4	-83.0	-67.8	-56.4	-44.9	-41.2	-41.2
ROOF NEG PRESSURE, ZONES 3R		-110.4	-110.4	-110.4	-96.0	-76.9	-62.5	-62.5	-62.5	-62.5
ROOF POS PRESSURE, ALL ZONES		33.2	31.4	28.9	27.0	24.5	22.6	22.6	22.6	22.6
ROOF OVERHANG PRESSURE ZONES 1, 2E		-81.1	-81.1	-81.1	-81.1	-66.0	-54.5	-54.5	-54.5	-54.5
ROOF OVERHANG PRESSURE ZONES 2N, 2R		-107.7	-107.7	-107.7	-99.1	-87.8	-79.2	-70.6	-67.8	-67.8
ROOF NEG PRESSURE ZONES 3E		-123.7	-123.7	-123.7	-108.8	-89.1	-74.2	-59.3	-54.5	-54.5
ROOF NEG PRESSURE ZONES 3R		-139.6	-139.6	-139.6	-120.4	-95.0	-75.8	-75.8	-75.8	-75.8
WALL ZONE 4	(+)	41.2	41.2	41.2	39.8	37.9	36.5	35.1	33.2	33.2
	(-)	-43.9	-43.9	-43.9	-42.5	-40.6	-39.2	-37.8	-35.9	-35.9
WALL ZONE 5	(+)	41.2	41.2	41.2	39.8	37.9	36.5	35.1	33.2	33.2
	(-)	-51.9	-51.9	-51.9	-49.0	-45.3	-42.5	-39.6	-35.9	-35.9

ELECTRICAL BUILDING

INTERNAL PRESSURE COEFFICIENT ..... ±0.55

DIMENSION "a" ..... 3 FT

ROOF TYPE 2

COMPONENT AND CLADDING WIND PRESSURES, PSF

EFFECTIVE WIND AREA (SQR FT) →		<=10	20	50	100	500+
ROOF INTERIOR ZONE	(+)	28	26	24	23	23
	(-)	-39	-38	-37	-36	-36
ROOF EDGE ZONE	(+)	28	26	24	23	23
	(-)	-60	-56	-51	-47	-47
ROOF CORNER ZONE	(+)	28	26	24	23	23
	(-)	-84	-79	-73	-68	-68
ROOF OVERHANG EDGE ZONE		-98.4	-98.4	-98.4	-98.4	-98.4
ROOF OVERHANG CORNER ZONE		-58.5	-58.5	-58.5	-58.5	-58.5
WALL INTERIOR ZONE	(+)	41	40	38	37	33
	(-)	-44	-42	-41	-39	-36
WALL EDGE ZONE	(+)	41	40	38	37	33
	(-)	-52	-49	-45	-42	-36

NOTES:

1. POSITIVE PRESSURES ACT TOWARDS THE SURFACE. NEGATIVE PRESSURES ACT AWAY FROM THE SURFACE.
2. LINEARLY INTERPOLATE PRESSURES FOR EFFECTIVE WIND AREAS BETWEEN THOSE SCHEDULED OR USE PRESSURES FOR THE SMALLER EFFECTIVE WIND AREA.
3. ALL ROOF OVERHANG PRESSURES ACT UPWARD.
4. SOFFITS BELOW ROOF OVERHANGS ARE DESIGNED FOR THE PRESSURE ON THE WALL BELOW THE SOFFIT.

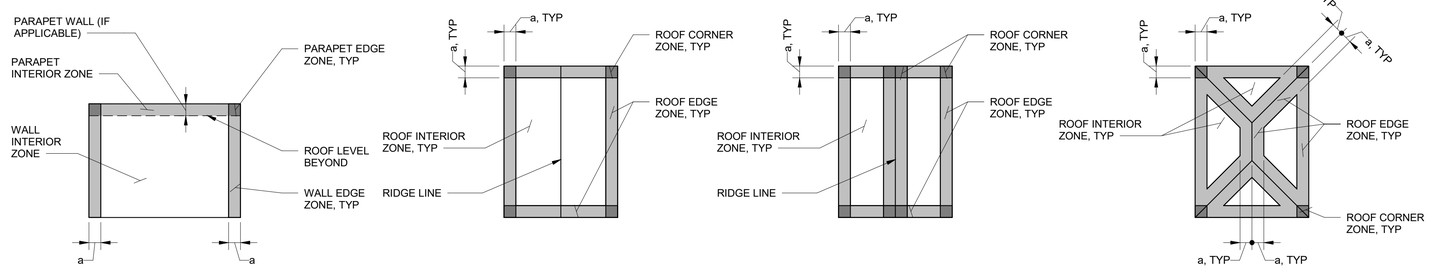

WALL ELEVATION

ROOF PLAN
TYPE 1 ROOF
(FLAT OR GABLE ≤7°)

ROOF PLAN
TYPE 2 ROOF
(GABLE 7°-45°)

ROOF PLAN
TYPE 3 ROOF
(HIP 7°-27°)

WIND ZONE DIAGRAMS

BLACK & VEATCH
Black & Veatch Corporation
Kansas City, Missouri

olsson

THIS DOCUMENT WAS ORIGINALLY ISSUED AND SEALED ON JANUARY 24, 2023 BY DOUGLAS L. DUNCAN, A LICENSED PROFESSIONAL ENGINEER IN THE STATE OF ARKANSAS, E-18748

BEAVER WATER DISTRICT

WESTERN CORRIDOR PUMP STATION

100% SET

REVISIONS AND RECORD OF ISSUE

DESIGNED:	KB/DLD
DETAILED:	PP
CHECKED:	BSB
APPROVED:	DLD
DATE:	JANUARY 24, 2023
PROJECT NO.:	405654

PUMP STATION

STRUCTURAL

LOADING CRITERIA

S-00-002

OF 159

(SCALE BAR IS 4" AT FULL SCALE) 0 1/2 1 2 3 4

PLOTTED: 1/20/2023 10:55:25 AM
FILE: BIM 360://405654 - BWD Western Corridor Pump Station/405654-42-PUMP STATION.rvt
D11000

A

ADDL	ADDITIONAL
AFF	ABOVE FINISH FLOOR
AHR	ANCHOR
ALT	ALTERNATE
ALUM	ALUMINUM
APPROX	APPROXIMATE
ARCH	ARCHITECTURAL
AROD	ANCHOR ROD
ASSY	ASSEMBLY
AWG	AMERICAN WIRE GAUGE

B

BLDG	BUILDING
BM	BENCHMARK, BEAM
BO	BOTTOM OF
BOT	BOTTOM
BRDG	BRIDGING
BRG	BEARING
BTWN	BETWEEN

C

C	CAMBER
CANTIL	CANTILEVER
CHKD	CHECKERED
CHKDPL	CHECKERED PLATE
CIP	CAST-IN-PLACE
CJ	CONTRACTION JOINT
CJP	COMPLETE JOINT PENETRATION
CL	CENTERLINE
CLR	CLEAR
CMU	CONCRETE MASONRY UNIT
COL	COLUMN
CONC	CONCRETE
CONN	CONNECTION
CONSTR	CONSTRUCTION
CONT	CONTINUOUS,CONTINUATION, CONTROL
COORD	COORDINATE
COV	COVER
CRNR	CORNER
CSJ	CONSTRUCTION JOINT
CTRD	CENTERED
CTRS	CENTERS

D

db	BAR DIAMETER
DBA	DEFORMED BAR ANCHOR
DET	DETAIL
DIA	DIAMETER
DIAG	DIAGONAL
DIM	DIMENSION
DN	DOWN
DWA	DEFORMED WIRE ANCHOR
DWG(S)	DRAWING, DRAWINGS
DWL(S)	DOWEL, DOWELS

E

E	EAST
EA	EACH
EE	EACH END
EF	EACH FACE
EJ	EXPANSION JOINT
EL	ELEVATION
EMBED	EMBEDMENT
EMER	EMERGENCY
ENGR	ENGINEER
EQ	EQUAL
EQUIP	EQUIPMENT
EQUIV	EQUIVALENT
EW	EACH WAY
EXIST	EXISTING
EXP	EXPANSION
EXT	EXTERIOR

F

FAB	FABRICATE
f'c	28 DAY CONCRETE STRENGTH =
FD	FLOOR DRAIN
FDN	FOUNDATION
FIN	FINISH(ED)
FLR	FLOOR
FS	FAR SIDE
FT	FOOT
FTG	FOOTING
FUT	FUTURE
FV	FIELD VERIFY
Fy	STRUCTURAL STEEL YIELD STRENGTH =
fy	REINFORCING STEEL YIELD STRENGTH =

G

GA	GAUGE
GALV	GALVANIZED
GEN	GENERAL
GR	GRADE

H

H	HORIZONTAL REACTION
HC	HOLLOW CORE
HCA	HEADED CONCRETE ANCHOR
HEX	HEXAGONAL
HGR	HANGER
HORIZ	HORIZONTAL
HP	HIGH POINT
HSS	HOLLOW STRUCTURAL SECTION

I

ID	INSIDE DIAMETER
IF	INSIDE FACE
IN	INCHES
INT	INTERIOR, INTERNAL
INV	INVERT

J

JT	JOINT

K

K	KIPS (1000 LBS)
KSF	KIPS PER SQUARE FOOT
KSI	KIPS PER SQUARE INCH

L

L	LENGTH, ANGLE
LAB	LABORATORY
LB(S)	POUND, POUNDS
ld	DEVELOPMENT LENGTH
LE	LEFT END
LIN	LINES
LLBB	LONG LEG BACK TO BACK
LLH	LONG LEG HORIZONTAL
LLV	LONG LEG VERTICAL
LONG	LONGITUDINAL
LP	LOW POINT
LSH	LONG SIDE HORIZONTAL
LSHP	LONG SLOTTED HOLE PARALLEL
LSLT	LONG SLOTTED HOLE TRANSVERSE
LSV	LONG SIDE VERTICAL
LWC	LIGHTWEIGHT CONCRETE

M

M	MOMENT
MAS	MASONRY
MATL	MATERIAL
MAX	MAXIMUM
MC	MOMENT CONNECTION, MECHANICAL COUPLING
MECH	MECHANICAL
MEZZ	MEZZANINE
MFR	MANUFACTURE(R)
MIN	MINIMUM
MISC	MISCELLANEOUS
MTL	METAL

N

N	NORTH
N/A	NOT APPLICABLE
NIC	NOT IN CONTRACT
NO.	NUMBER
NOM	NOMINAL
NS	NEAR SIDE
NTS	NOT TO SCALE
NWC	NORMAL WEIGHT CONCRETE

O

OC	ON CENTER
OD	OUTSIDE DIAMETER
OF	OUTSIDE FACE
OPER	OPERATING
OPH	OPPOSITE HAND
OPNG	OPENING
OPP	OPPOSITE
OVS	OVERSIZED HOLE
OZ	OUNCE

P

P	AXIAL LOAD
PAF	POWDER ACTUATED FASTENER
PAR	PARALLEL
PCC	PRECAST CONCRETE
PCF	POUNDS PER CUBIC FOOT
PEMB	PRE-ENGINEERED METAL BUILDING
PERP	PERPENDICULAR
PJP	PARTIAL JOINT PENETRATION
PL	PLATE
PLCS	PLACES
PLF	POUNDS PER LINEAR FOOT
PR	PAIR
PRELIM	PRELIMINARY
PROJ	PROJECTION
PROP	PROPERTY
PSF	POUNDS PER SQUARE FOOT
PSI	POUNDS PER SQUARE INCH
PT	POST TENSIONED

Q

QTY	QUANTITY

R

R	RADIUS, RISER, REMAINDER
RCP	REINFORCED CONCRETE PIPE
RD	ROOF DRAIN
RECT	RECTANGULAR
REF	REFERENCE
REINF	REINFORCEMENT
REQD	REQUIRED
REV	REVISION
RO	ROUGH OPENING

S

S	SOUTH
SC	SLIP CRITICAL, SHEAR CONNECTOR
SCHED	SCHEDULE
SECT	SECTION
SH	SHEET
SIM	SIMILAR
SJ	SAW JOINT
SLBB	SHORT LEG BACK TO BACK
SPA	SPACING
SPEC	SPECIFICATION
SPRT	SUPPORT
SQ	SQUARE
SS	STAINLESS STEEL
SSHP	SHORT SLOTTED HOLE PARALLEL
SSHT	SHORT SLOTTED HOLE TRANSVERSE
STD	STANDARD
STIF	STIFFENER
STIR	STIRRUP
STL	STEEL
STR	STRUCTURE, STRUCTURAL
SYM	SYMMETRICAL

T

T	TREAD, SCHEDULED PLATE THICKNESS, TOP
T&B	TOP & BOTTOM
TAN	TANGENT
TEMP	TEMPERATURE
THD	THREADED
THK	THICK, THICKNESS
TO	TOP OF
TOC	TOP OF CONCRETE
TOF	TOP OF FOOTING
TOM	TOP OF MASONRY
TOS	TOP OF STEEL
TOW	TOP OF WALL
TYP	TYPICAL

U

UNO	UNLESS NOTED OTHERWISE
USGS	UNITED STATES GEOLOGICAL SURVEY

V

VERT	VERTICAL
VNR	VENEER

W

W	WEST
W/	WITH
W/O	WITHOUT
WF	WIDE FLANGE
WP	WORK POINT
WT	WEIGHT
WWR	WELDED WIRE REINFORCEMENT

X

x	BY, TIMES
XS	EXTRA STRONG
XXS	DOUBLE EXTRA STRONG

Y

NOT USED

Z

NOT USED

SPECIAL CHARACTERS

@	AT
&	AND
ø	DIAMETER
#	NUMBER
%	PERCENT

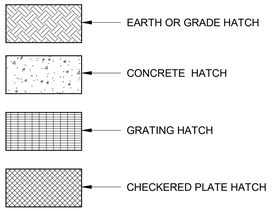

(SCALE BAR IS 4" AT FULL SCALE) 0 1/2 1 2 3 4

PLOTTED: 1/20/2023 10:55:26 AM
FILE: BIM 360://405654 - BWD Western Corridor Pump Station\405654-42-PUMP STATION.rvt
D11000

BLACK & VEATCH
Black & Veatch Corporation
Kansas City, Missouri

olsson

THIS DOCUMENT WAS ORIGINALLY ISSUED AND SEALED ON JANUARY 24, 2023 BY DOUGLAS L. DUNCAN, A LICENSED PROFESSIONAL ENGINEER IN THE STATE OF ARKANSAS, E-18748

BEAVER WATER DISTRICT

WESTERN CORRIDOR PUMP STATION

100% SET

REVISIONS AND RECORD OF ISSUE

DESIGNED:	KB/DLD
DETAILED:	PP
CHECKED:	BSB
APPROVED:	DLD
DATE:	JANUARY 24, 2023
PROJECT NO.:	405654

PUMP STATION

STRUCTURAL

LEGENDS AND ABBREVIATIONS

S-00-003

OF 159

GENERAL SHEET NOTES

1. FOR STRUCTURAL NOTES, SEE SHEET S-42-102.
2. FOR PIPE DETAILS AND LOCATION, REFER MECHANICAL DRAWINGS.

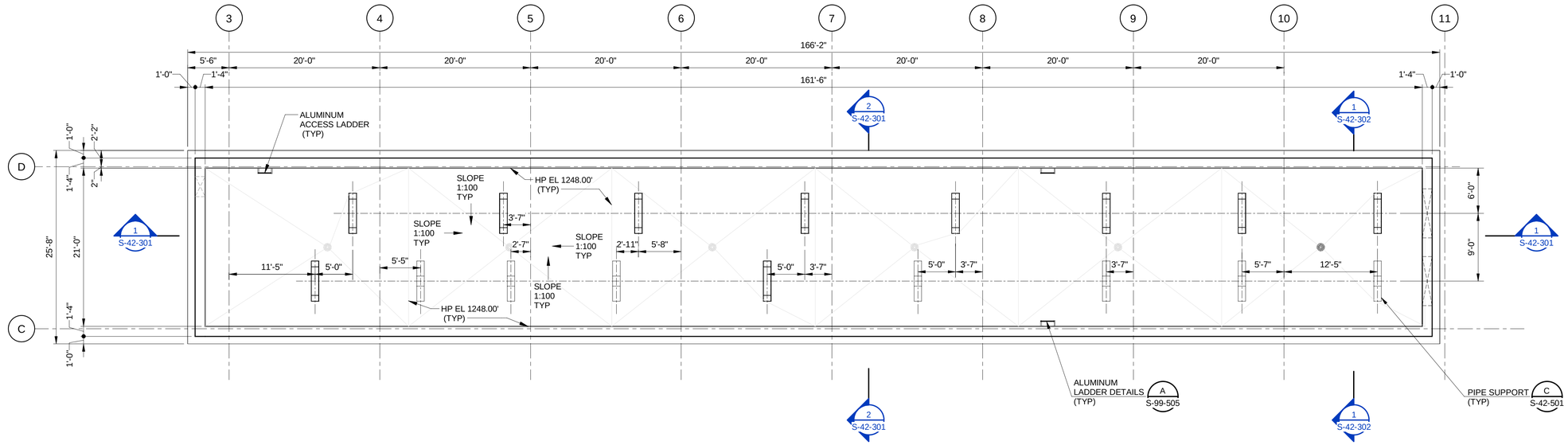

TRENCH FOUNDATION PLAN

1/8" = 1'-0"

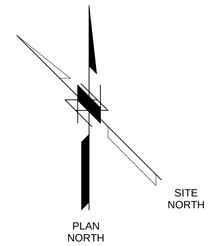

12' 8' 4' 0' 10' 20'

3/32" = 1'-0"

(SCALE BAR IS 4" AT FULL SCALE) 0 1/2 1 2 3 4

PLOTTED: 1/20/2023 7:33:06 AM
FILE: BIM 360://405654 - BWD Western Corridor Pump Station/405654-42-PUMP STATION.rvt
D11000

BLACK & VEATCH
Black & Veatch Corporation
Kansas City, Missouri

olsson

THIS DOCUMENT WAS ORIGINALLY ISSUED AND SEALED ON JANUARY 24, 2023 BY DOUGLAS L. DUNCAN, A LICENSED PROFESSIONAL ENGINEER IN THE STATE OF ARKANSAS, E-18748

BEAVER WATER DISTRICT

WESTERN CORRIDOR PUMP STATION

100% SET

REVISIONS AND RECORD OF ISSUE

DESIGNED:	KB
DETAILED:	PP
CHECKED:	DLD
APPROVED:	DLD
DATE:	JANUARY 24, 2023
PROJECT NO.:	405654

PUMP STATION

STRUCTURAL

TRENCH FOUNDATION PLAN

S-42-101

OF 159

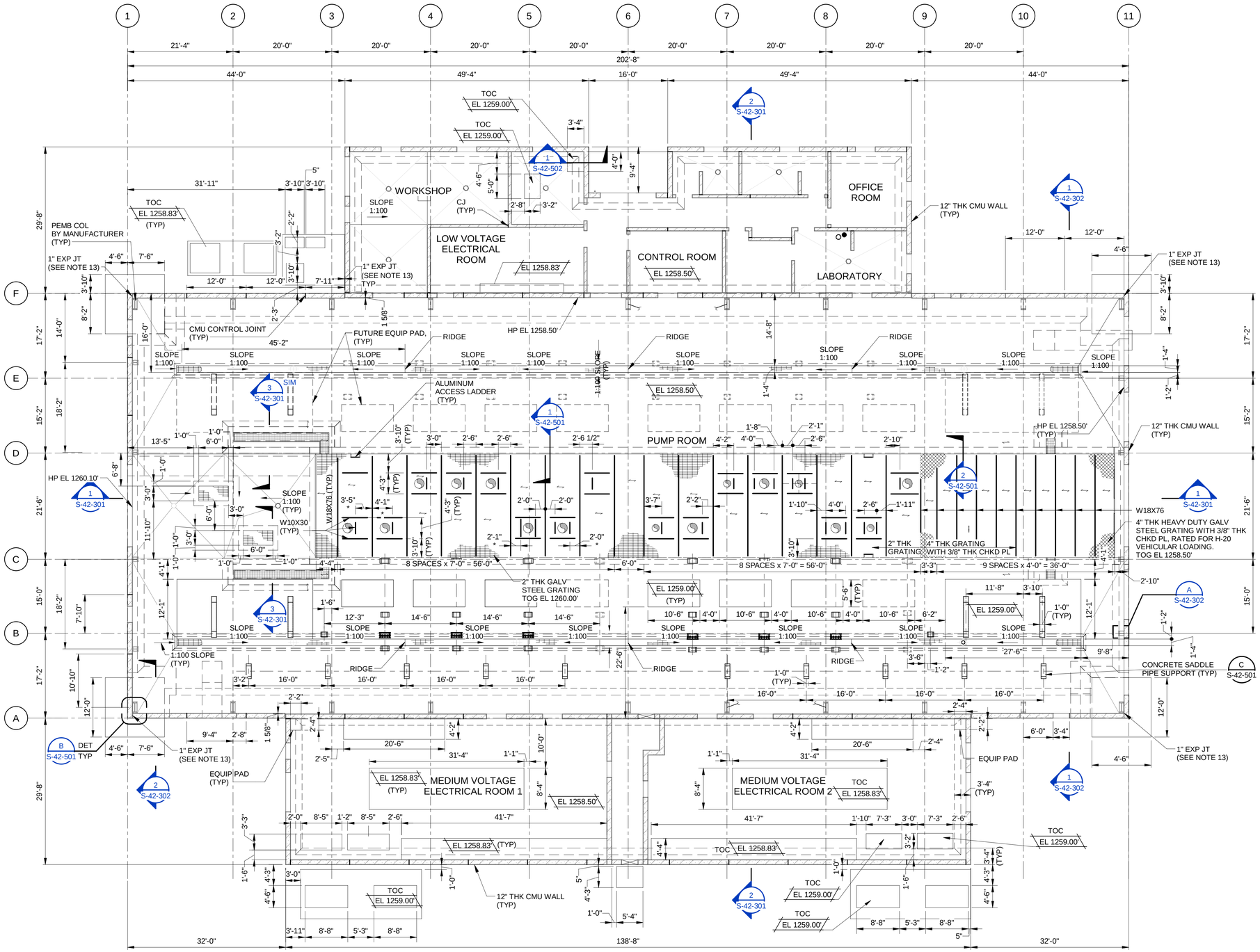

OPERATING FLOOR PLAN

3/32" = 1'-0"

* ADJUST AS PER SITE

GENERAL SHEET NOTES

1. SEE CIVIL SITE PLAN FOR BUILDING COORDINATES.
2. SEE ARCHITECTURAL DRAWINGS FOR PRE-ENGINEERED METAL BUILDING FRAMING.
3. FOR STRUCTURAL NOTES AND LOADING CRITERIA, SEE SHEET S-00-001, S-00-002.
4. FOR STANDARD CONCRETE DETAILS, SEE SHEET S-99-501, S-99-502.
5. FOR PUMPS, PIPE PENETRATION, PIPE SUPPORT LOCATIONS, OTHER EQUIPMENT AND MECHANICAL DETAILS, SEE SHEET M-42-101.
6. THE PIPE OPENINGS IN GRATING ARE 4" LARGER THAN THE OD OF PIPE
7. STEEL CANOPY IS PRE-ENGINEERED METAL BUILDING AND IT IS DELEGATED DESIGN TO BE DESIGNED AS PER LOADING CRITERIA ON SHEET S-00-002 AND RELATED TECHNICAL SPECIFICATION. ENGINEER TO REVIEW ANCHOR BOLT LAYOUT, ANCHORAGE REINFORCEMENT AS PER FINAL REACTIONS PROVIDED BY PEMB MANUFACTURER.
8. ALL STEEL MEMBERS, CONNECTION ACCESSORIES AND GRATING SHALL BE HOT-DIP GALVANIZED UNLESS NOTED OTHERWISE.
9. FINAL DIMENSION OF ALL CONCRETE PEDESTALS SHALL BE COORDINATED WITH VENDOR DRAWINGS AND SIZE MAY BE INCREASED, IF STRUCTURALLY REQUIRED TO MAINTAIN ADEQUATE CONCRETE EDGE DISTANCE FROM CENTERLINE OF ANCHOR BOLTS TO EDGE OF CONCRETE.
10. FLOOR ELEVATION DENOTES SLAB EDGE ALONG WALLS, CURBS, AND LP EL OF FLOOR DRAINS AND TRENCHES.
11. TOP REINFORCEMENT OF THE BASE SLAB WILL HAVE VARYING COVER. MINIMUM COVER REQUIRED SHALL BE PROVIDED AT THE LOW POINT ELEVATION OF THE SLAB AND THE COVER SHALL BE GREATER AT THE HIGH POINT ELEVATION OF THE SLAB.
12. THE PEMB REACTIONS OF PUMPSTATION BUILDING NEED TO BE VERIFIED BY BV ENGINEER PRIOR TO POURING FOUNDATION.
13. THE EXPANSION JOINT IS IN THE MASONRY ABOVE FOUNDATION, FOUNDATION TO BE CONTINUOUS BETWEEN PUMPSTATION AND ELECTRICAL/CONTROL ROOM

Black & Veatch Corporation
Kansas City, Missouri

olsson

THIS DOCUMENT WAS ORIGINALLY ISSUED AND SEALED ON JANUARY 24, 2023 BY DOUGLAS L. DUNCAN, A LICENSED PROFESSIONAL ENGINEER IN THE STATE OF ARKANSAS, E-18748

BEAVER WATER DISTRICT

WESTERN CORRIDOR PUMP STATION

100% SET

REVISIONS AND RECORD OF ISSUE

DESIGNED:	KB
DETAILED:	PP
CHECKED:	DLD
APPROVED:	DLD
DATE:	JANUARY 24, 2023
PROJECT NO.:	405654

PUMP STATION

STRUCTURAL

OPERATING FLOOR PLAN

S-42-102 | OF 159

(SCALE BAR IS 4" AT FULL SCALE) 0 1/2 1 2 3 4

12' 8' 4' 0' 10' 20'

3/32" = 1'-0"

PLOTTED: 1/20/2023 7:31:29 AM
FILE: BIM 360://405654 - BWD Western Corridor Pump Station/405654-42-PUMP STATION.rvt
D11000

GENERAL SHEET NOTES

1. FOR STRUCTURAL NOTES, SEE SHEET S-42-102.
2. SEE SPEC SECTIONS 13122 AND 14630 FOR PEMB AND BRIDGE CRANE DESIGN PARAMETERS. CONTRACTOR SHALL COORDINATE BOTH SECTIONS WITH PEMB FABRICATOR TO PROVIDE ALL DESIGN AND DETAILING NECESSARY TO CONSTRUCT THE COMPLETE BUILDING SYSTEM WITH THE BRIDGE CRANE.
3. FOR BRIDGE CRANE CAPACITY, CLEARANCE AND OTHER DETAILS, REFER MECHANICAL DRAWINGS.
4. FOR RUNWAY BEAM CONNECTION DETAILS, SEE SHEET S-99-506

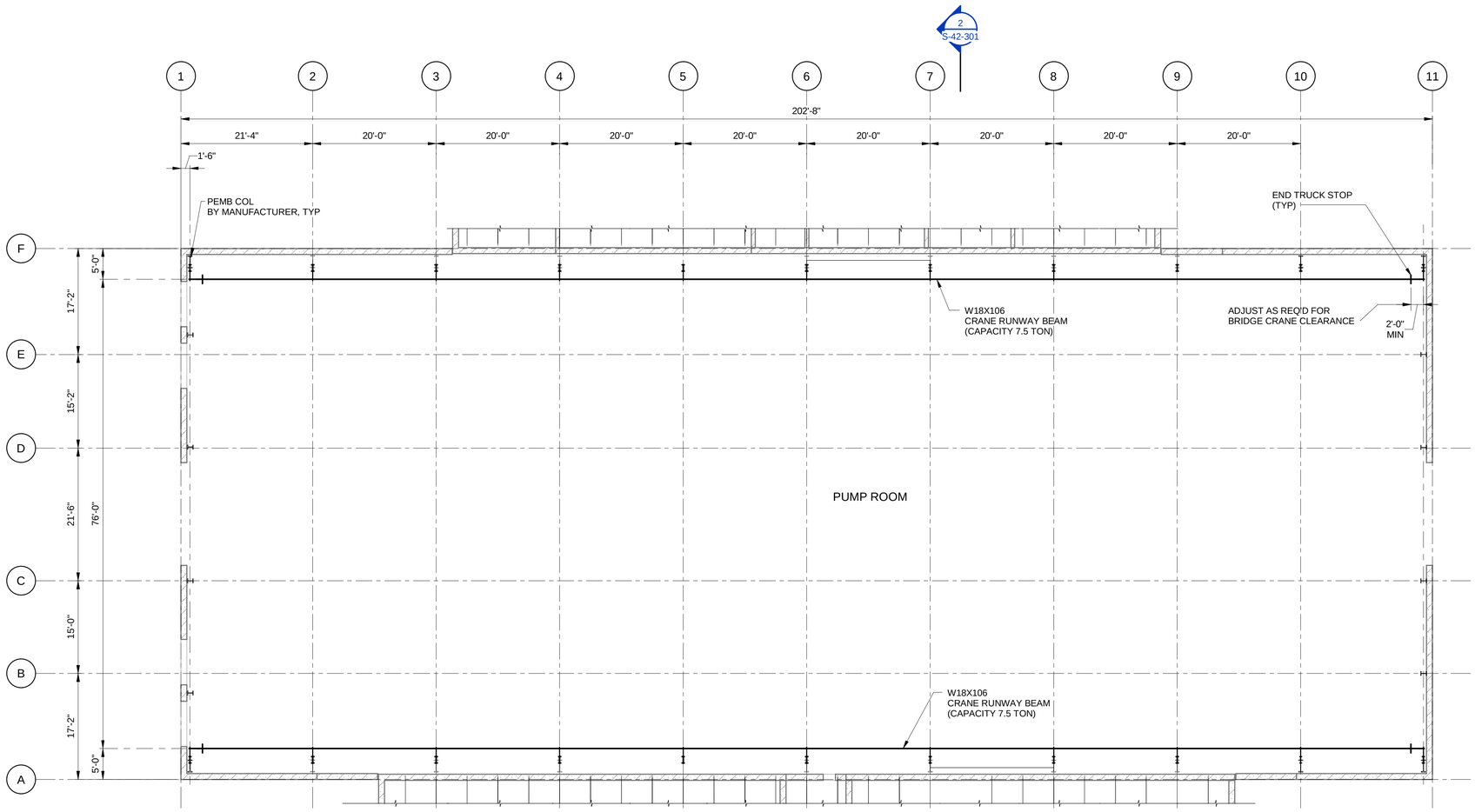

CRANE RUNWAY BEAM PLAN (TOS EL 1272.39')

3/32" = 1'-0"

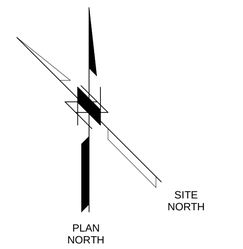

12' 8' 4' 0' 10' 20'

3/32" = 1'-0"

(SCALE BAR IS 4" AT FULL SCALE) 0 1/2 1 2 3 4

BLACK & VEATCH

Black & Veatch Corporation
Kansas City, Missouri

olsson

THIS DOCUMENT WAS ORIGINALLY ISSUED AND SEALED ON JANUARY 24, 2023 BY DOUGLAS L. DUNCAN, A LICENSED PROFESSIONAL ENGINEER IN THE STATE OF ARKANSAS, E-18748

BEAVER WATER DISTRICT

WESTERN CORRIDOR PUMP STATION

100% SET

REVISIONS AND RECORD OF ISSUE

DESIGNED:	KB
DETAILED:	PP
CHECKED:	DLD
APPROVED:	DLD
DATE:	JANUARY 24, 2023
PROJECT NO.:	405654

PUMP STATION

STRUCTURAL

CRANE RUNWAY BEAM PLAN

S-42-103

OF 159

PLOTTED: 1/20/2023 7:34:37 AM
FILE: BIM 360://405654 - BWD Western Corridor Pump Station/405654-42-PUMP STATION.rvt
D11000

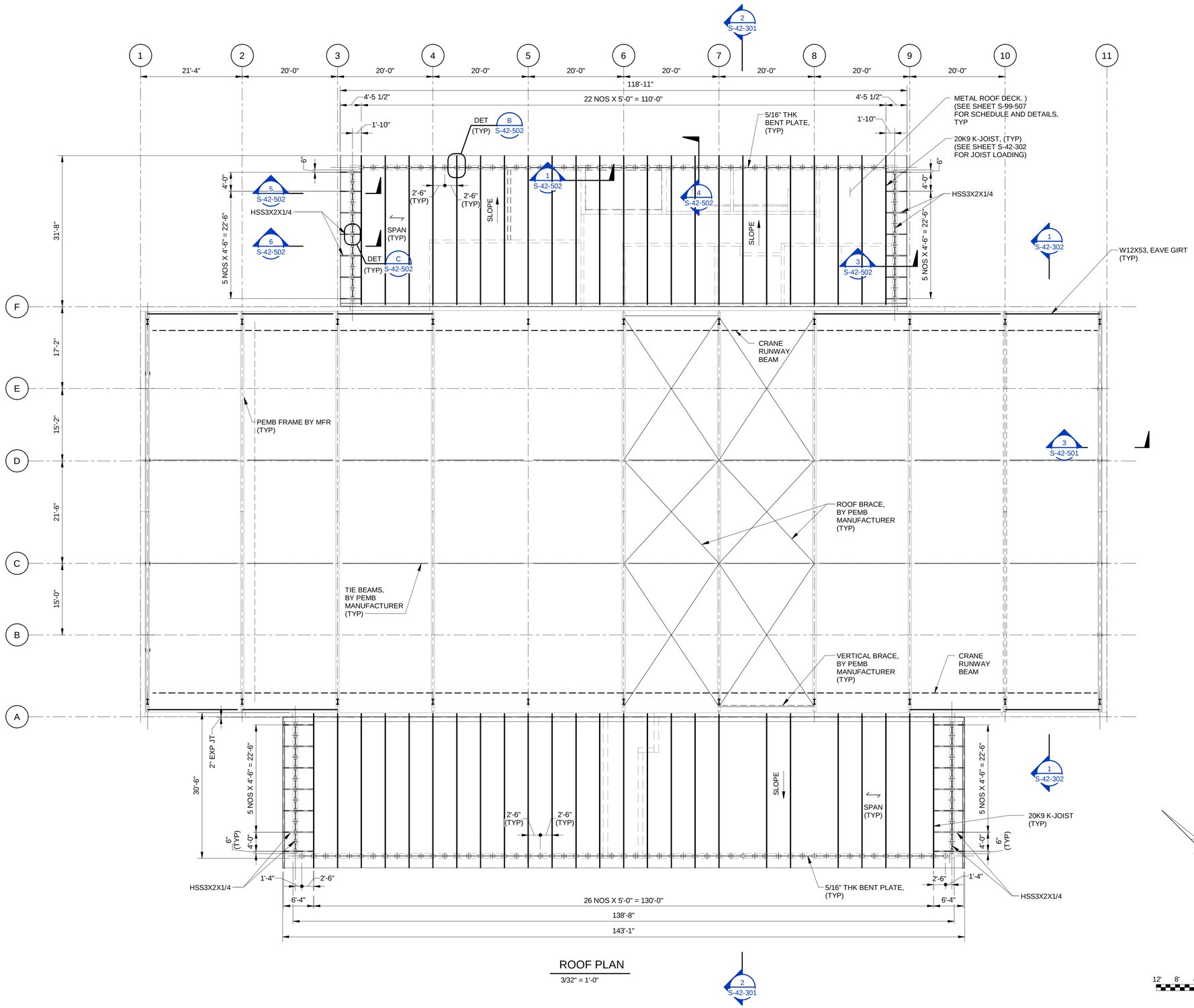

ROOF PLAN

3/32" = 1'-0"

(SCALE BAR IS 4" AT FULL SCALE) 0 1/2 1 2 3 4

PLOTTED: 1/20/2023 7:34:48 AM
FILE: BIM 360://405654 - BWD Western Corridor Pump Station/405654-42-PUMP STATION.rvt
D11000

BLACK & VEATCH

Black & Veatch Corporation
Kansas City, Missouri

olsson

THIS DOCUMENT WAS ORIGINALLY ISSUED AND SEALED ON JANUARY 24, 2023 BY DOUGLAS L. DUNCAN, A LICENSED PROFESSIONAL ENGINEER IN THE STATE OF ARKANSAS, E-18748

BEAVER WATER DISTRICT

WESTERN CORRIDOR PUMP STATION

100% SET

REVISIONS AND RECORD OF ISSUE

DESIGNED:	KB
DETAILED:	PP
CHECKED:	DLD
APPROVED:	DLD
DATE:	JANUARY 24, 2023
PROJECT NO.:	405654

PUMP STATION

STRUCTURAL

ROOF PLAN

S-42-104

OF 159

GENERAL SHEET NOTES

1. FOR STRUCTURAL NOTES, SEE SHEET S-42-102.
2. FALL ARREST TIE-OFF SHALL BE DESIGNED BY CONTRACTOR.

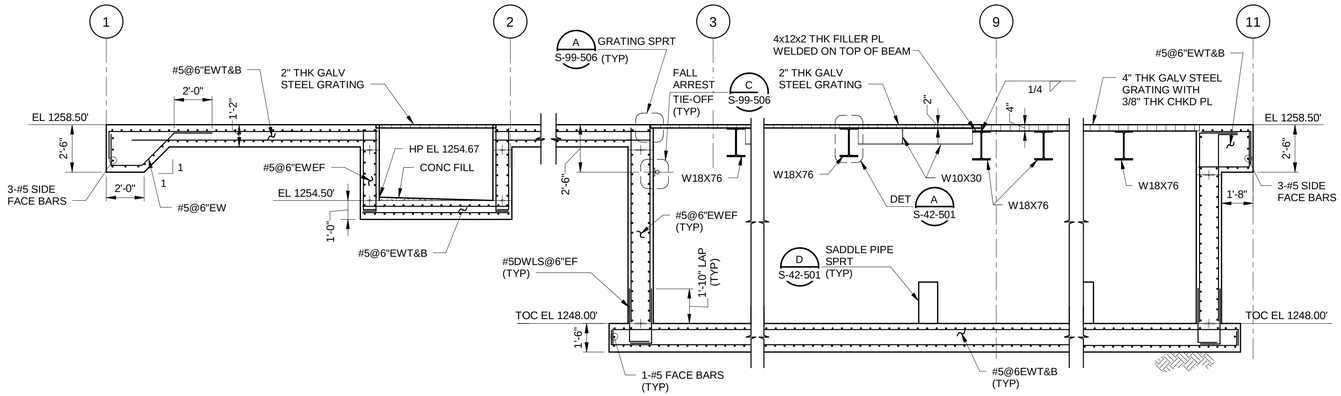

1 S-42-101 SECTION 1/4" = 1'-0"

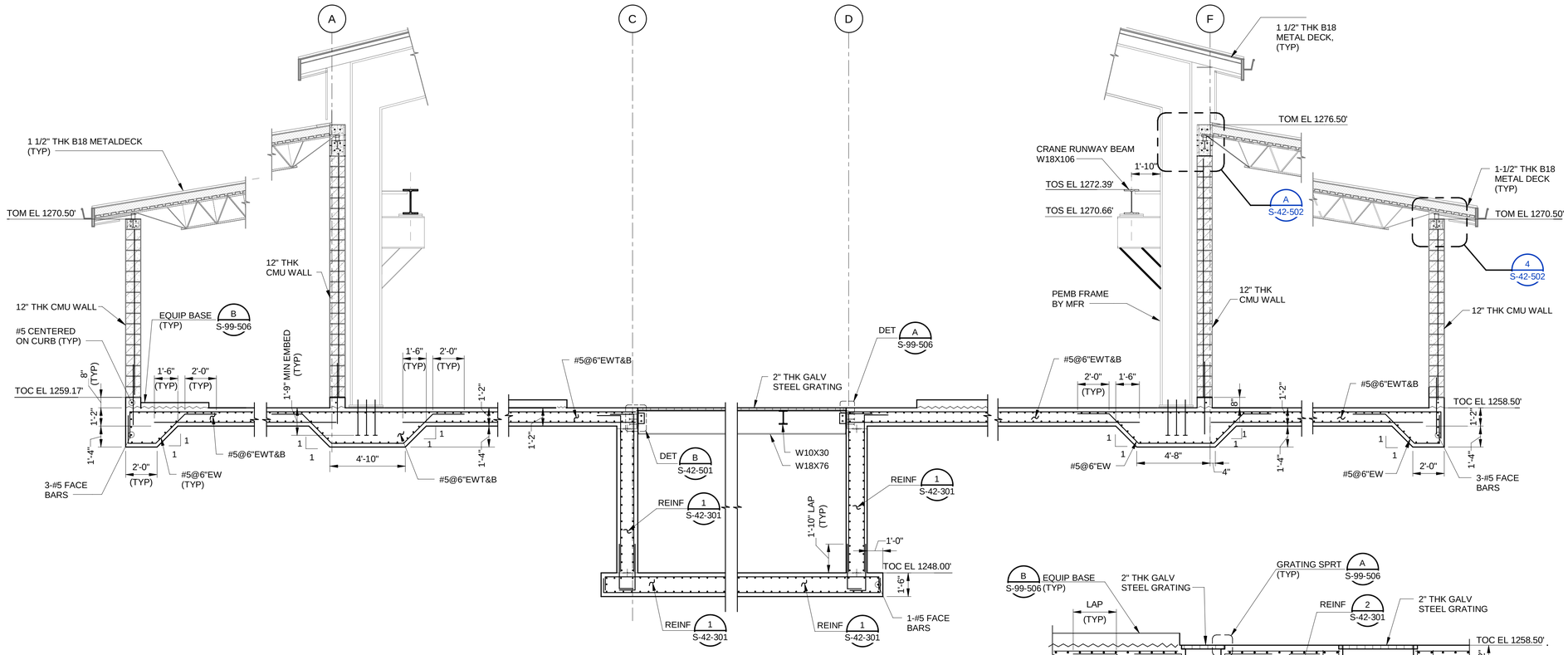

2 S-42-101 SECTION 1/4" = 1'-0"

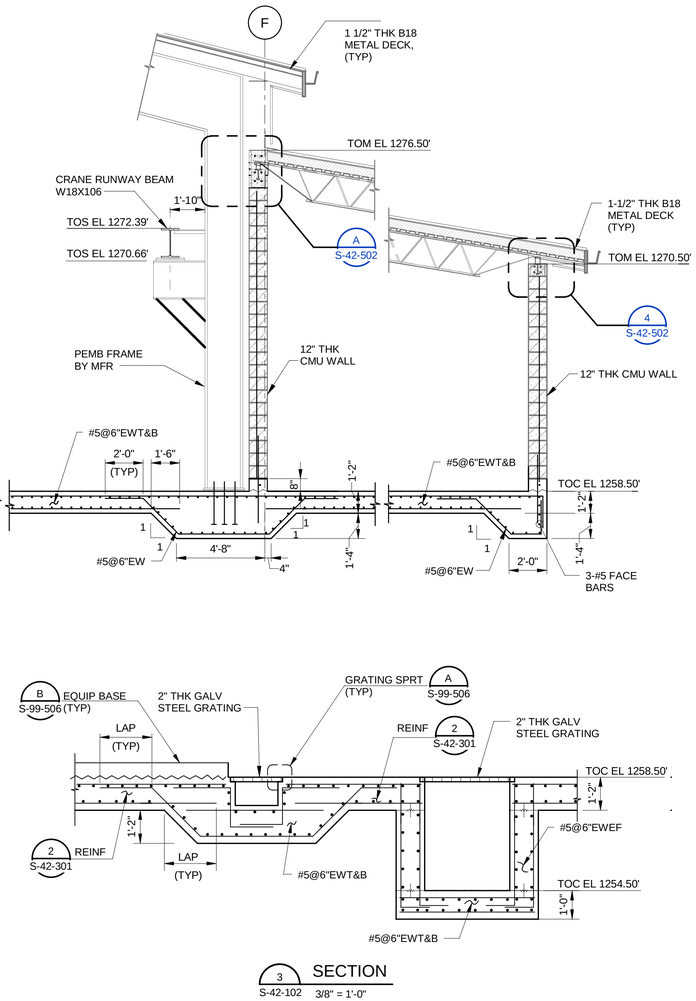

3 S-42-102 SECTION 3/8" = 1'-0"

(SCALE BAR IS 4" AT FULL SCALE) 0 1/2 1 2 3 4

12" 9" 36" 3" 0' 61" 122"
1" = 1'-0"

12" 0' 1' 2' 3' 4' 5' 6' 7'
3/8" = 1'-0"

4' 2' 0' 4' 8'
1/4" = 1'-0"

BLACK & VEATCH

Black & Veatch Corporation
Kansas City, Missouri

olsson

THIS DOCUMENT WAS ORIGINALLY ISSUED AND SEALED ON JANUARY 24, 2023 BY DOUGLAS L. DUNCAN, A LICENSED PROFESSIONAL ENGINEER IN THE STATE OF ARKANSAS, E-18748

BEAVER WATER DISTRICT

WESTERN CORRIDOR PUMP STATION

100% SET

REVISIONS AND RECORD OF ISSUE

DESIGNED:	KB
DETAILED:	PP
CHECKED:	DLD
APPROVED:	DLD
DATE:	JANUARY 24, 2023
PROJECT NO.:	405654

PUMP STATION

STRUCTURAL

SECTIONS

S-42-301 OF 159

PLOTTED: 1/20/2023 7:31:50 AM
FILE: BIM 360://405654 - BWD Western Corridor Pump Station/405654-42-PUMP STATION.rvt
D11000

GENERAL SHEET NOTES

1. FOR STRUCTURAL NOTES, SEE SHEET S-42-102.

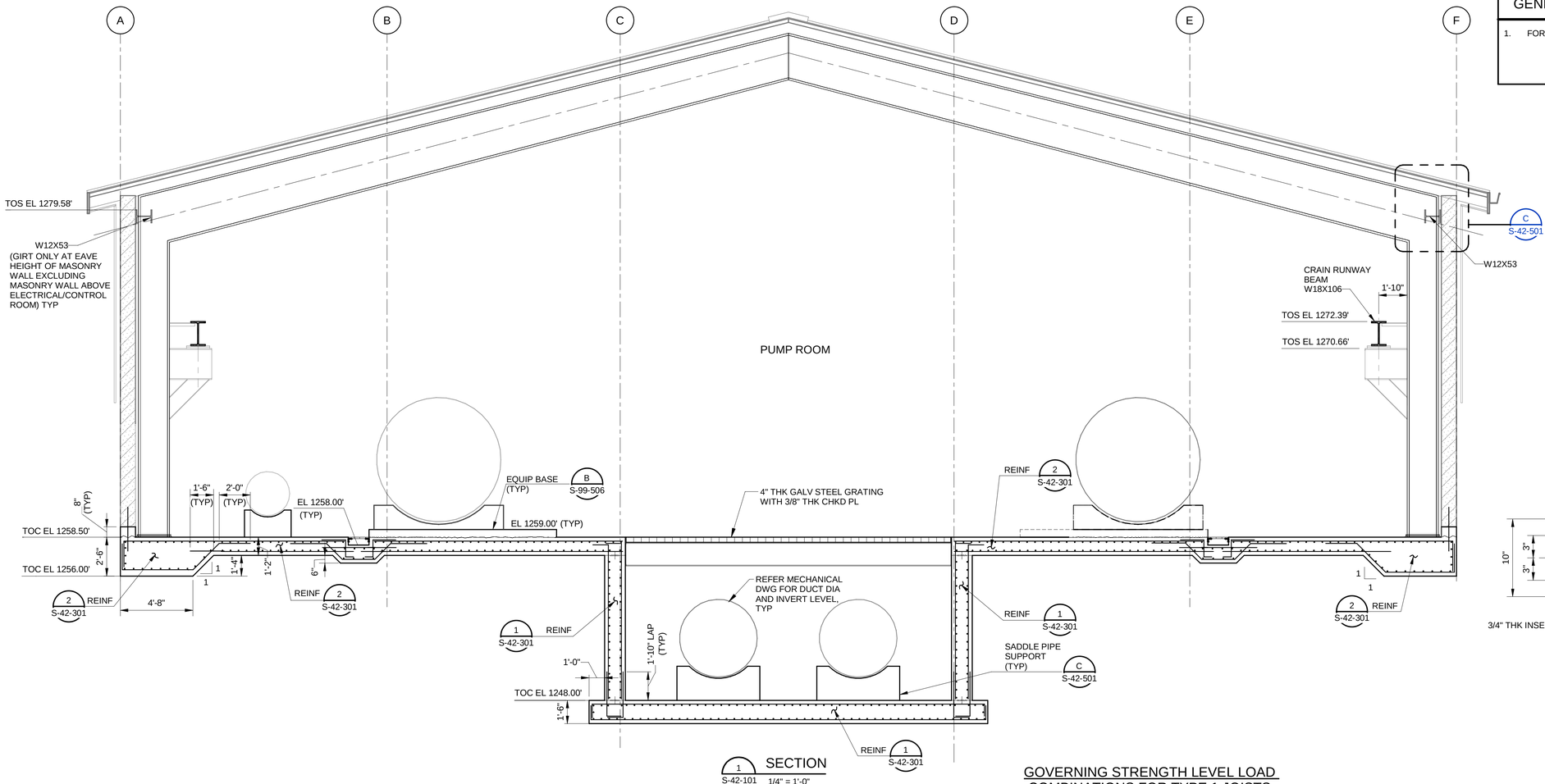

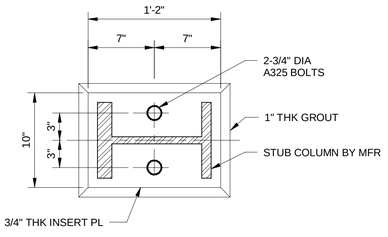

A DETAIL S-42-102 1 1/2" = 1'-0"

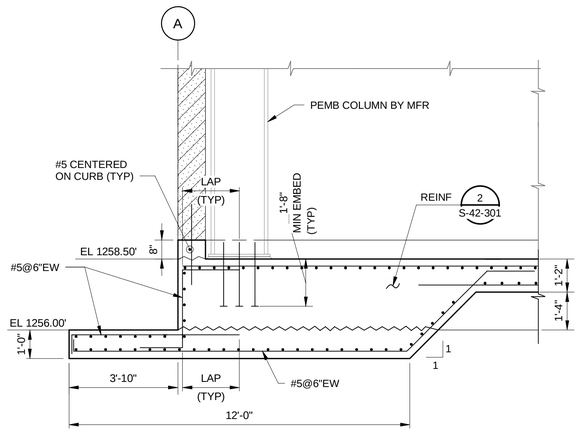

2 SECTION S-42-102 3/8" = 1'-0"

BUILDING LOADS TO FOUNDATION				
COLUMN LOCATION	DOWNWARD	UPLIFT	SHEAR NORTH + SOUTH	SHEAR EAST + WEST
A1, A11, F1, F11	80.0 K	-10.0 K	40.0 K	10.0 K
A2 TO A10, F2 TO F10	235.0 K	-30.0 K	72.0 K	76.0 K

1. FOUNDATIONS HAVE BEEN DESIGNED FOR THE FACTORED LOADS INDICATED IN THE TABLE. THE INDICATED LOADS ARE THOSE FROM THE BUILDING TO THE FOUNDATION.
2. CONSTRUCTION OF FOUNDATIONS SHALL NOT BEGIN UNTIL ENGINEER HAS REVIEWED ALL PRE-ENGINEERED METAL BUILDING SUBMITTAL DRAWINGS AND ANY ANCHORAGE AND FOUNDATION MODIFICATIONS HAVE BEEN PROVIDED TO CONTRACTOR.
3. SPANDREL BEAMS SHALL BE DESIGNED BY THE PEMB.

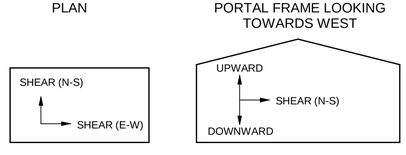

BUILDING LOADS TO FOUNDATION
NO SCALE

GOVERNING STRENGTH LEVEL LOAD COMBINATIONS FOR TYPE 1 JOISTS

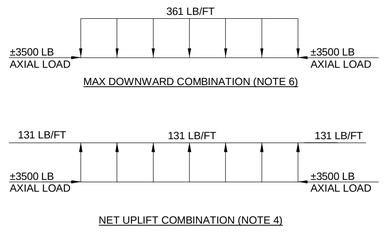

GOVERNING STRENGTH LEVEL LOAD COMBINATIONS FOR TYPE 2 JOISTS

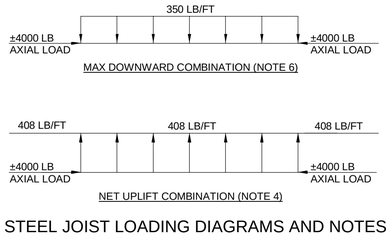

STEEL JOIST LOADING DIAGRAMS AND NOTES
12" = 1'-0"

NOTES:

1. JOIST MANUFACTURER TO DESIGN JOISTS TO SUPPORT GOVERNING STRENGTH LEVEL LOAD COMBINATIONS SHOWN.
2. ALL LOADS ARE LISTED AT STRENGTH LEVEL AND DESIGN SHALL BE BASED UPON LOAD RESISTANCE FACTOR DESIGN (LRFD) PARAMETERS.
3. JOIST DESIGNATION SHOWN ON PLANS INDICATE MAXIMUM DEPTH AND MINIMUM WEIGHT. SP INDICATES SPECIAL JOIST. JOISTS TO BE DESIGNED FOR FACTORED LOAD COMBINATIONS SHOWN AND OTHER LOADS INDICATED. CONCENTRATED LOADS INDICATED ON ROOF PLAN ARE UNFACTORED DEAD LOADS.
4. JOIST BRIDGING REQUIRED FOR ERECTION AND WIND UPLIFT LOADING SHALL BE DESIGNED AND FURNISHED BY JOIST SUPPLIER. LOCATIONS, QUANTITIES AND DETAILS TO BE SHOWN ON JOIST SUPPLIER'S PLACEMENT DRAWINGS.
5. IN ADDITION TO OTHER LOADS INDICATED, JOIST MFR TO DESIGN JOIST SEATS AND TOP CHORD FOR FACTORED AXIAL LOAD (TENSION AND COMPRESSION) INDICATED IN LOAD COMBINATIONS SHOWN. JOIST SEATS SHALL ALSO BE DESIGNED FOR THE ECCENTRIC LOAD MEASURED FROM THE TOP OF THE JOIST BEARING PLATE TO CENTROID OF TOP CHORD MEMBER.
6. IN ADDITION TO THE LOADS SHOWN, INCLUDE A VERTICAL CONCENTRATED LOAD OF 300 LBS (UNFACTORED DEAD LOAD) AT ANY LOCATION ALONG THE BOTTOM CHORD FOR DOWNWARD LOAD COMBINATIONS ONLY.
7. REFERENCE MECHANICAL AND ARCHITECTURAL DRAWINGS FOR LOCATIONS OF ROOF TOP UNITS.

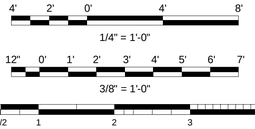

(SCALE BAR IS 4" AT FULL SCALE) 0 1/2 1 2 3 4

PLOTTED: 1/20/2023 7:34:53 AM
FILE: BIM 360://405654 - BWD Western Corridor Pump Station/405654-42-PUMP STATION.rvt
D11000

BLACK & VEATCH
Black & Veatch Corporation
Kansas City, Missouri
olsson

THIS DOCUMENT WAS ORIGINALLY ISSUED AND SEALED ON JANUARY 24, 2023 BY DOUGLAS L. DUNCAN, A LICENSED PROFESSIONAL ENGINEER IN THE STATE OF ARKANSAS, E-18748

BEAVER WATER DISTRICT

WESTERN CORRIDOR PUMP STATION

100% SET

REVISIONS AND RECORD OF ISSUE

DESIGNED:	KB
DETAILED:	PP
CHECKED:	DLD
APPROVED:	DLD
DATE:	JANUARY 24, 2023
PROJECT NO.:	405654

PUMP STATION

STRUCTURAL

SECTIONS

S-42-302

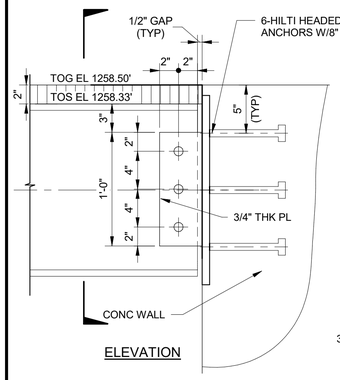

ELEVATION

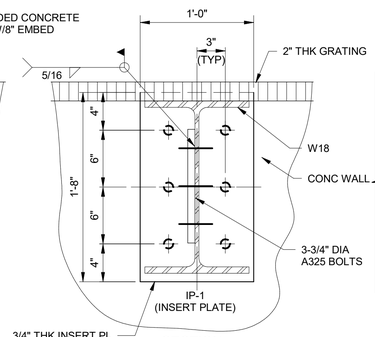

SECTION

NOTE: CONTRACTOR TO COLD GALVANIZE WELDS.

1 SECTION
S-42-102 1 1/2" = 1'-0"

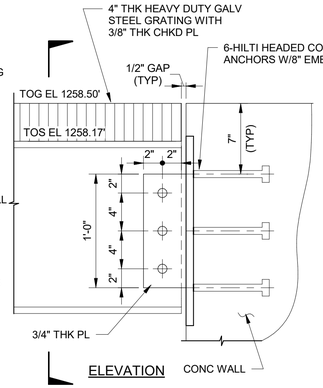

ELEVATION

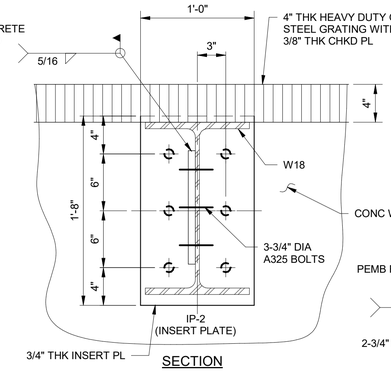

SECTION

NOTE: CONTRACTOR TO COLD GALVANIZE WELDS.

2 SECTION
S-42-102 1 1/2" = 1'-0"

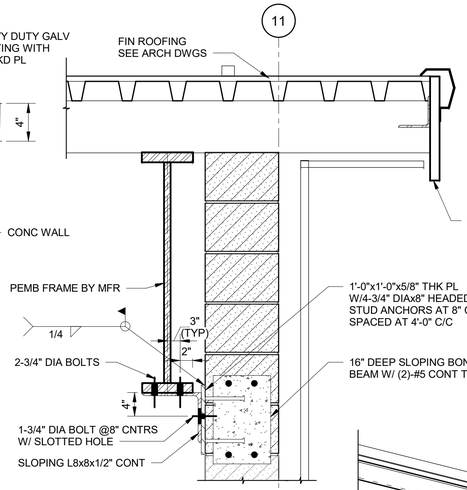

3 SECTION
S-42-104 1" = 1'-0"

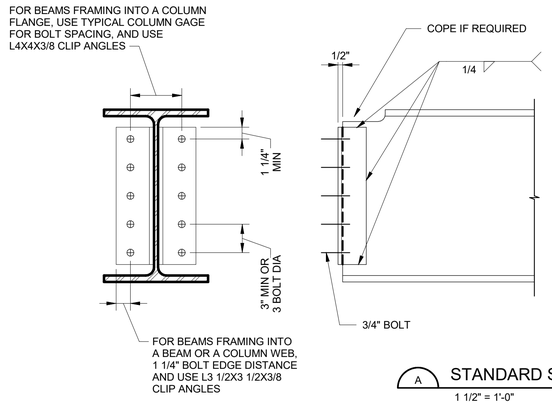

A STANDARD STEEL FRAMING CONNECTION DETAIL
1 1/2" = 1'-0"

SHOP BOLTED - FIELD BOLTED		
BEAM SIZE (ALL WEIGHTS)	NO OF BOLTS IN OSL	ANGLE SIZE
W8	4	SEE DETAIL
W10	4	SEE DETAIL
W12	6	SEE DETAIL

NOTE: FABRICATOR SHALL PROVIDE ADDITIONAL CLIPS, SEATS, BOLTS, ETC AS REQUIRED TO COMPLY WITH OSHA SAFETY STANDARDS FOR STEEL ERECTION.

OSL = OUTSTANDING LEG

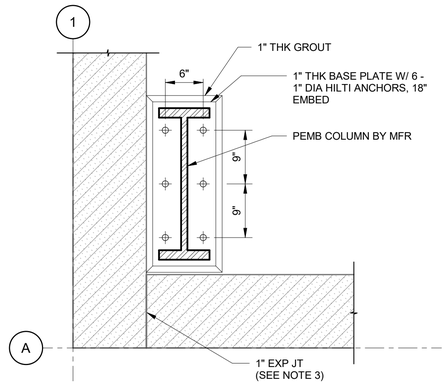

B DETAIL
S-42-102 1" = 1'-0"

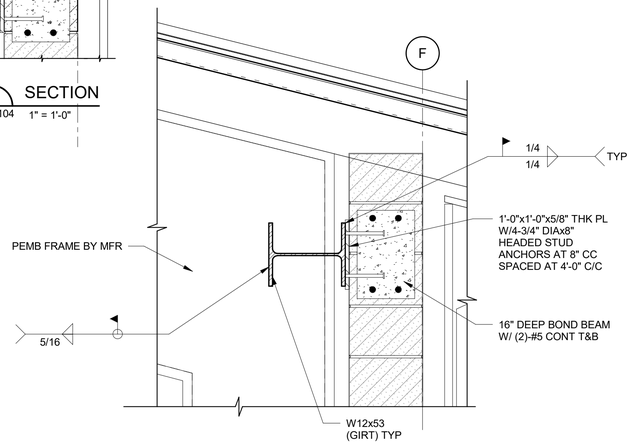

C DETAIL
S-42-302 1" = 1'-0"

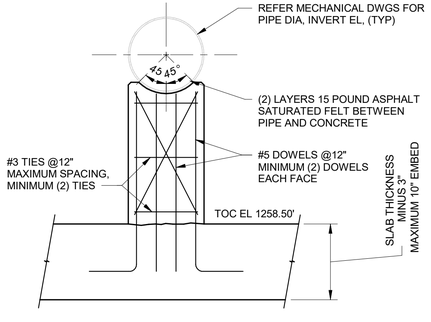

16" DIA PIPE SUPPORT

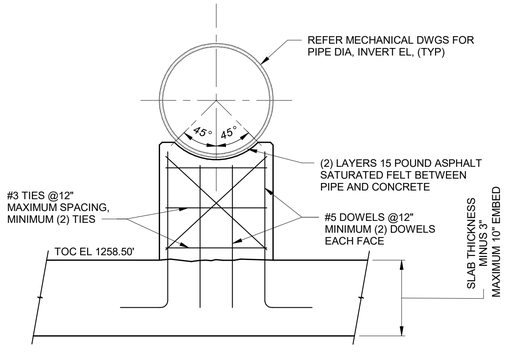

24" DIA PIPE SUPPORT

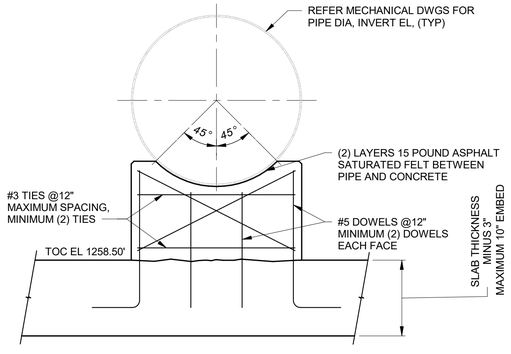

36" DIA PIPE SUPPORT

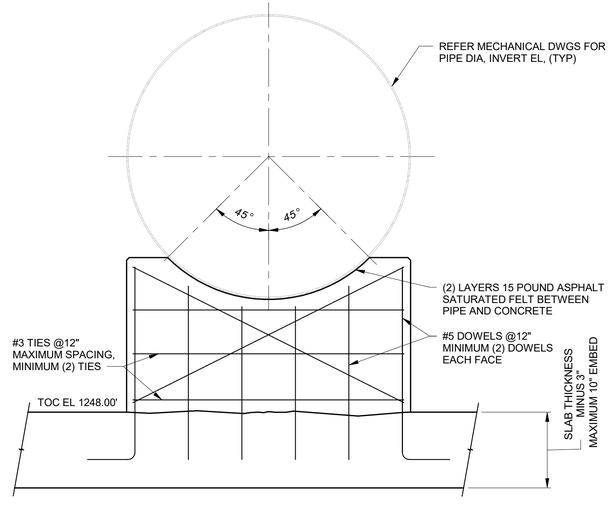

60" DIA PIPE SUPPORT

D CONCRETE SADDLE PIPE SUPPORT
3/4" = 1'-0"

NOTES:

1. SUPPORT WIDTH = 12"
2. #5 EACH FACE WITH STANDARD HOOK, ONLY REQUIRED FOR PIPE DIAMETER 48" AND LARGER.

GENERAL SHEET NOTES

1. FOR STRUCTURAL NOTES, SEE SHEET S-42-102.
2. ALL STEEL STRUCTURAL MEMBERS AND CONNECTION BOLTS AND GUSSET PLATES TO BE HOT DIP GALVANIZED
3. THE EXPANSION JOINT IS IN THE MASONRY ABOVE FOUNDATION. FOUNDATION TO BE CONTINUOUS BETWEEN PUMPSTATION AND ELECTRICAL/CONTROL ROOM

BLACK & VEATCH

Black & Veatch Corporation
Kansas City, Missouri

olsson

THIS DOCUMENT WAS ORIGINALLY ISSUED AND SEALED ON JANUARY 24, 2023 BY DOUGLAS L. DUNCAN, A LICENSED PROFESSIONAL ENGINEER IN THE STATE OF ARKANSAS, E-18748

BEAVER WATER DISTRICT

WESTERN CORRIDOR PUMP STATION

100% SET

REVISIONS AND RECORD OF ISSUE

DESIGNED:	KB
DETAILED:	PP
CHECKED:	DLD
APPROVED:	DLD
DATE:	JANUARY 24, 2023
PROJECT NO.:	405654

PUMP STATION

STRUCTURAL

PIPE SUPPORT AND MISCELLANEOUS DETAILS

S-42-501

OF 159

12" 9" 6" 3" 0" 1'
1 1/2" = 1'-0"

12" 6" 0' 1' 2" 3'
3/4" = 1'-0"

(SCALE BAR IS 4" AT FULL SCALE) 0 1/2 1 2 3 4

PLOTTED: 1/20/2023 10:55:35 AM
FILE: BIM 360://405654 - BWD Western Corridor Pump Station/405654-42-PUMP STATION.rvt
D11000

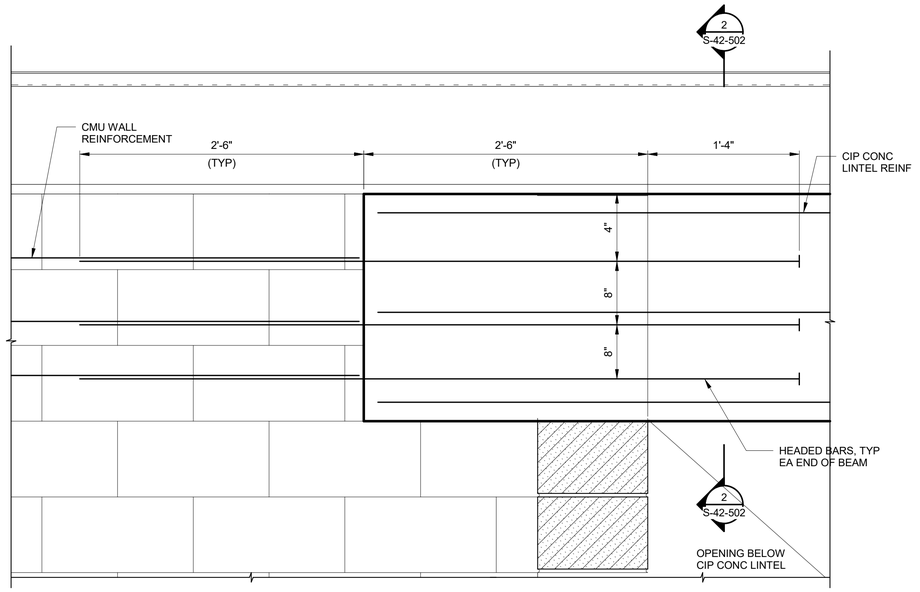

1 SECTION S-42-102 1 1/2" = 1'-0"

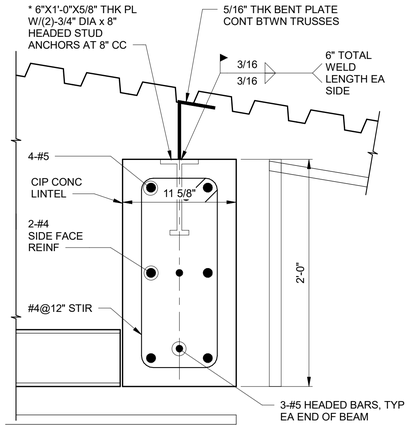

*NOTE: SEE PLAN FOR EMBED PL LOCTIONS

2 SECTION S-42-502 1 1/2" = 1'-0"

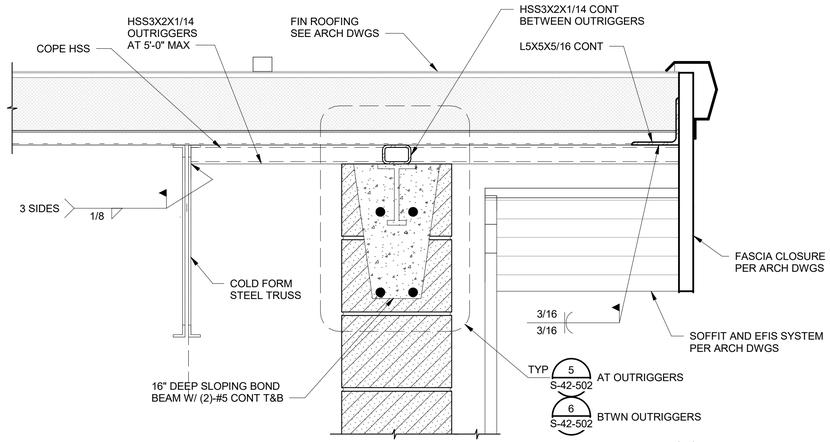

3 SECTION S-42-104 1 1/2" = 1'-0"

4 SECTION S-42-104 1 1/2" = 1'-0"

5 SECTION S-42-104 3" = 1'-0"

6 SECTION S-42-104 3" = 1'-0"

A DETAIL S-42-301 1 1/2" = 1'-0"

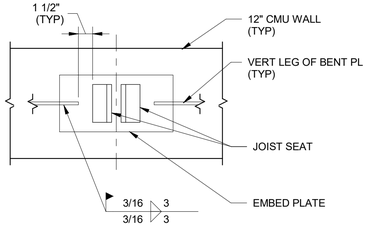

B DETAIL S-42-104 1 1/2" = 1'-0"

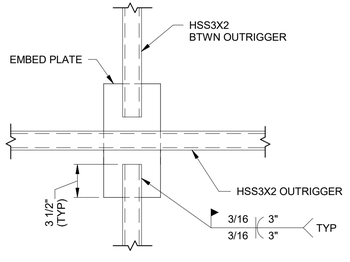

C DETAIL S-42-104 1 1/2" = 1'-0"

12" 9" 6" 3" 0" 1'
1 1/2" = 1'-0"

12" 9" 6" 3" 0"
3" = 1'-0"

(SCALE BAR IS 4" AT FULL SCALE) 0 1/2 1 2 3 4

PLOTTED: 1/20/2023 10:55:37 AM
FILE: BIM 360://405654 - BWD Western Corridor Pump Station/405654-42-PUMP STATION.rvt
D11000

BLACK & VEATCH
Black & Veatch Corporation
Kansas City, Missouri

olsson

THIS DOCUMENT WAS ORIGINALLY ISSUED AND SEALED ON JANUARY 24, 2023 BY DOUGLAS L. DUNCAN, A LICENSED PROFESSIONAL ENGINEER IN THE STATE OF ARKANSAS, E-18748

BEAVER WATER DISTRICT

WESTERN CORRIDOR PUMP STATION

100% SET

REVISIONS AND RECORD OF ISSUE

DESIGNED:	KB
DETAILED:	PP
CHECKED:	DLD
APPROVED:	DLD
DATE:	JANUARY 24, 2023
PROJECT NO.:	405654

PUMP STATION

STRUCTURAL

MISCELLANEOUS DETAILS

S-42-502

OF 159

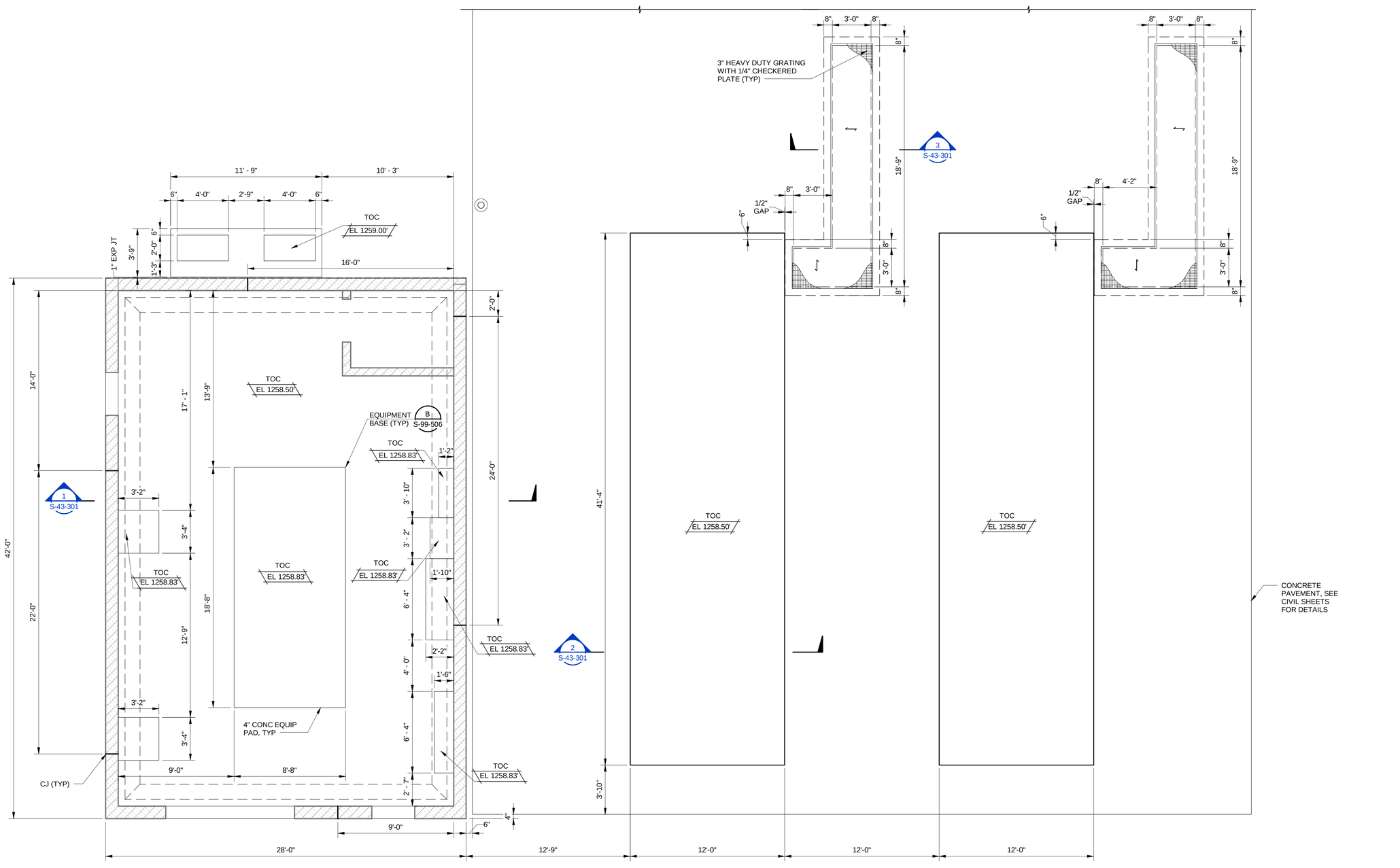

OPERATING FLOOR PLAN

1/4" = 1'-0"

4' 2' 0' 4' 8'

1/4" = 1'-0"

(SCALE BAR IS 4" AT FULL SCALE) 0 1/2 1 2 3 4

PLOTTED: 1/20/2023 7:28:29 AM
FILE: BIM 360://405654 - BWD Western Corridor Pump Station/405654-43-ELECTRICAL BUILDING.rvt
D11000

BLACK & VEATCH

Black & Veatch Corporation
Kansas City, Missouri

olsson

THIS DOCUMENT WAS ORIGINALLY ISSUED AND SEALED ON JANUARY 24, 2023 BY DOUGLAS L. DUNCAN, A LICENSED PROFESSIONAL ENGINEER IN THE STATE OF ARKANSAS, E-18748

BEAVER WATER DISTRICT

WESTERN CORRIDOR PUMP STATION

100% SET

REVISIONS AND RECORD OF ISSUE

DESIGNED:	DLD
DETAILED:	SMH
CHECKED:	BSB
APPROVED:	DLD
DATE:	JANUARY 24, 2023
PROJECT NO.:	405654

ELECTRICAL BUILDING

STRUCTURAL

ELECTRICAL BUILDING - FLOOR PLAN

S-43-101

OF 159

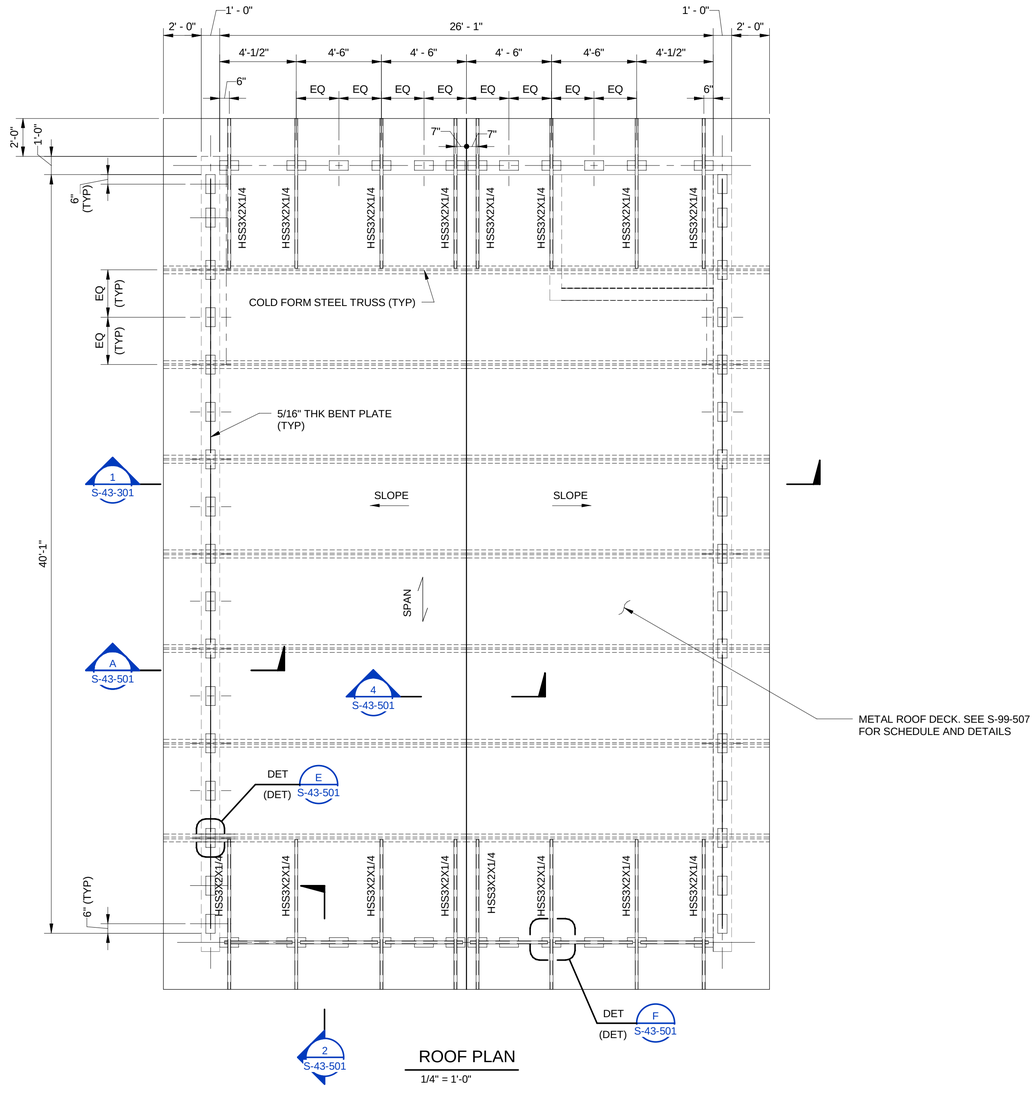

ROOF PLAN

1/4" = 1'-0"

GOVERNING STRENGTH LEVEL LOAD COMBINATIONS

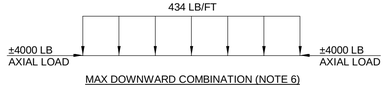

MAX DOWNWARD COMBINATION (NOTE 6)

NET UPLIFT COMBINATION (NOTE 4)

COLD FORM STEEL TRUSS LOADING DIAGRAMS AND NOTES

12" = 1'-0"

NOTES:

1. TRUSS MANUFACTURER TO DESIGN TRUSS TO SUPPORT GOVERNING STRENGTH LEVEL LOAD COMBINATIONS SHOWN.
2. ALL LOADS ARE LISTED AT STRENGTH LEVEL AND DESIGN SHALL BE BASED UPON LOAD RESISTANCE FACTOR DESIGN (LRFD) PARAMETERS.
3. TRUSS TO BE DESIGNED FOR FACTORED LOAD COMBINATIONS SHOWN AND OTHER LOADS INDICATED. CONCENTRATED LOADS INDICATED ON ROOF PLAN ARE UNFACTORED DEAD LOADS.
4. TRUSS BRIDGING REQUIRED FOR ERECTION AND WIND UPLIFT LOADING SHALL BE DESIGNED AND FURNISHED BY TRUSS SUPPLIER. LOCATIONS, QUANTITIES AND DETAILS TO BE SHOWN ON TRUSS SUPPLIER'S PLACEMENT DRAWINGS.
5. IN ADDITION TO OTHER LOADS INDICATED, TRUSS MFR TO DESIGN TRUSS SEATS AND TOP CHORD FOR FACTORED AXIAL LOAD (TENSION AND COMPRESSION) INDICATED IN LOAD COMBINATIONS SHOWN. TRUSS SEATS SHALL ALSO BE DESIGNED FOR THE ECCENTRIC LOAD MEASURED FROM THE TOP OF THE TRUSS BEARING PLATE TO CENTROID OF TOP CHORD MEMBER.
6. IN ADDITION TO THE LOADS SHOWN, INCLUDE A VERTICAL CONCENTRATED LOAD OF 300 LBS (UNFACTORED DEAD LOAD) AT ANY LOCATION ALONG THE BOTTOM CHORD FOR DOWNWARD LOAD COMBINATIONS ONLY.
7. REFER MECHANICAL AND ARCHITECTURAL DRAWINGS FOR LOCATIONS OF ROOF TOP UNITS.

4' 2' 0' 4' 8'

1/4" = 1'-0"

(SCALE BAR IS 4" AT FULL SCALE) 0 1/2 1 2 3 4

BLACK & VEATCH

Black & Veatch Corporation
Kansas City, Missouri

olsson

THIS DOCUMENT WAS ORIGINALLY ISSUED AND SEALED ON JANUARY 24, 2023 BY DOUGLAS L. DUNCAN, A LICENSED PROFESSIONAL ENGINEER IN THE STATE OF ARKANSAS, E-18748

BEAVER WATER DISTRICT

WESTERN CORRIDOR PUMP STATION

100% SET

REVISIONS AND RECORD OF ISSUE

DESIGNED:	DLD
DETAILED:	SMH
CHECKED:	BSB
APPROVED:	DLD
DATE:	JANUARY 24, 2023
PROJECT NO.:	405654

ELECTRICAL BUILDING

STRUCTURAL

ELECTRICAL BUILDING - ROOF PLAN

S-43-102

OF 159

PLOTTED: 1/20/2023 7:28:32 AM
FILE: BIM 360://405654 - BWD Western Corridor Pump Station/405654-43-ELECTRICAL BUILDING.rvt
D11000

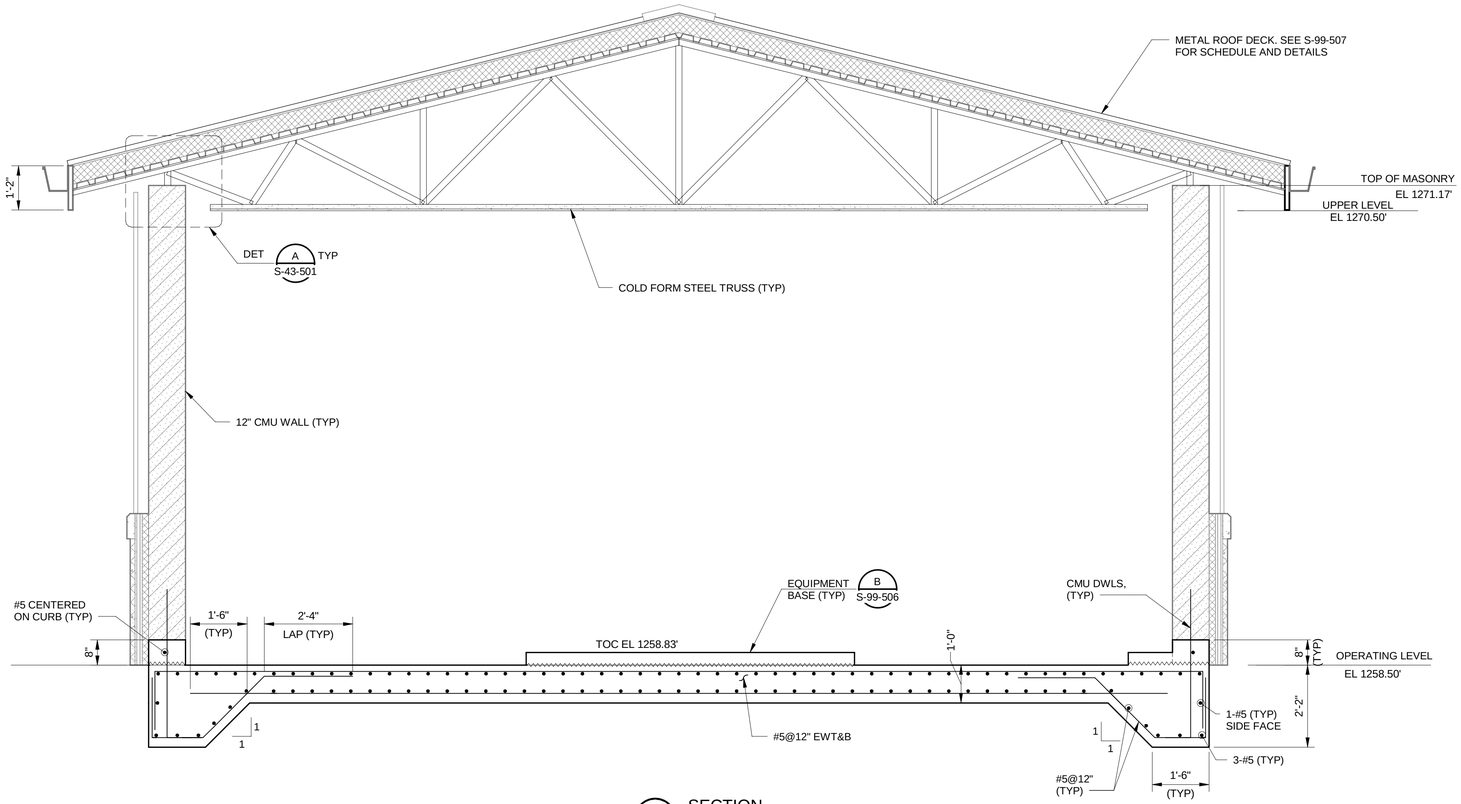

1 SECTION
S-43-101 1/2" = 1'-0"

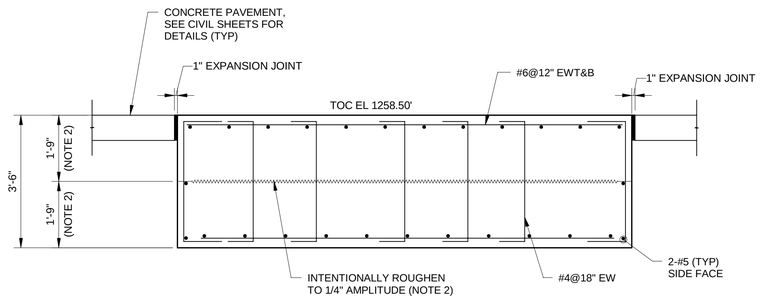

2 SECTION
S-43-101 1/2" = 1'-0"

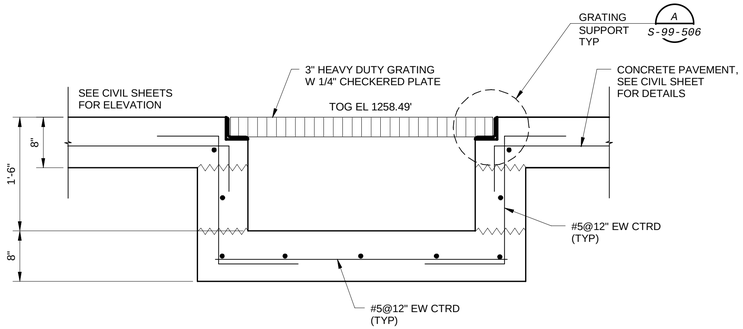

3 SECTION
S-43-101 1" = 1'-0"

NOTES:

1. FINAL DIMENSIONS OF GENERATOR FOUNDATION PAD SHALL BE COORDINATED WITH EQUIPMENT FURNISHED.
2. PAD SHALL BE PLACED IN TWO SEPARATE POURS OF 2'-6" MAXIMUM. THE SECOND POUR SHALL BE PLACED AFTER THE FIRST POUR HAS SET AND SHALL BE INTENTIONALLY ROUGHENED TO 1/4" AMPLITUDE.

12' 6' 0' 1' 2' 3' 4' 5'
1/2" = 1'-0"

12" 9" 6" 3" 0" 1' 2'
1" = 1'-0"

(SCALE BAR IS 4" AT FULL SCALE) 0 1/2 1 2 3 4

Black & Veatch Corporation
Kansas City, Missouri

olsson

THIS DOCUMENT WAS ORIGINALLY ISSUED AND SEALED ON JANUARY 24, 2023 BY DOUGLAS L. DUNCAN, A LICENSED PROFESSIONAL ENGINEER IN THE STATE OF ARKANSAS, E-18748

BEAVER WATER DISTRICT

WESTERN CORRIDOR PUMP STATION

100% SET

REVISIONS AND RECORD OF ISSUE

DESIGNED:	DLD
DETAILED:	SMH
CHECKED:	BSB
APPROVED:	DLD
DATE:	JANUARY 24, 2023
PROJECT NO.:	405654

ELECTRICAL BUILDING

STRUCTURAL

ELECTRICAL BUILDING - SECTIONS

S-43-301

OF 159

PLOTTED: 1/20/2023 7:28:35 AM
FILE: BIM 360://405654 - BWD Western Corridor Pump Station/405654-43-ELECTRICAL BUILDING.rvt
D11000

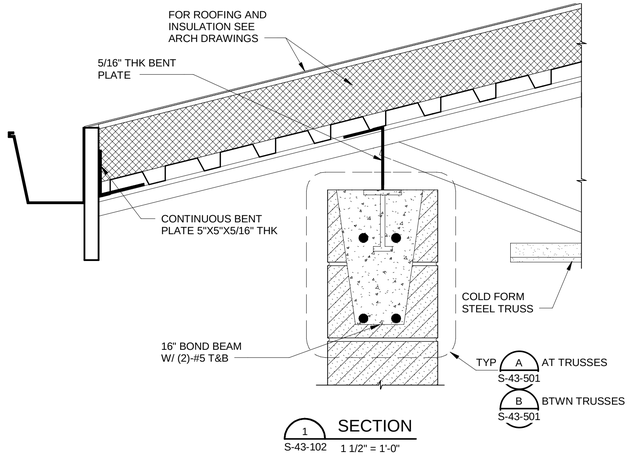

1 S-43-102 SECTION 1 1/2" = 1'-0"

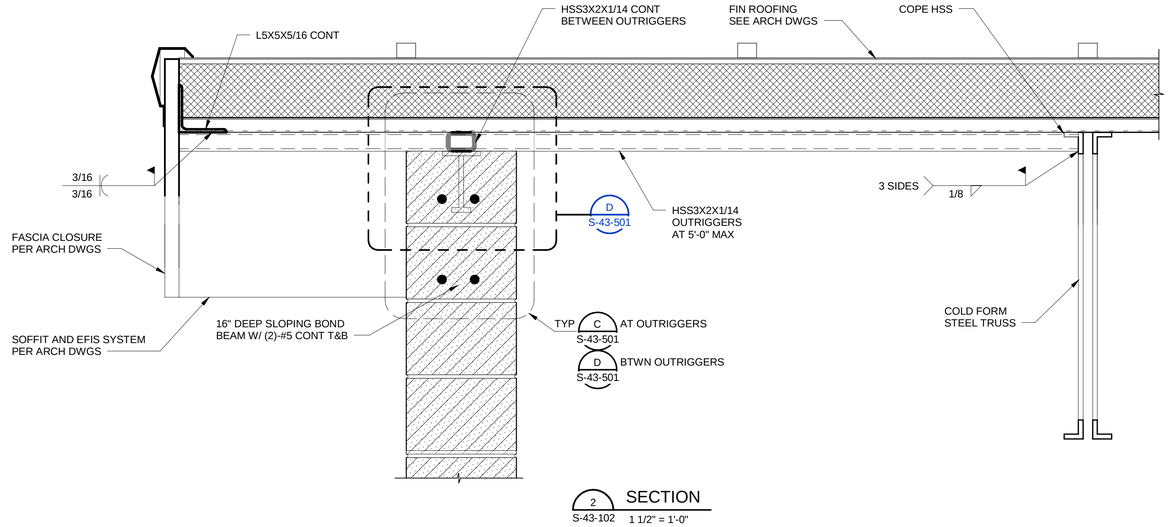

2 S-43-102 SECTION 1 1/2" = 1'-0"

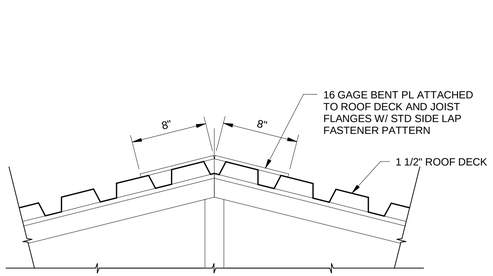

4 S-43-102 SECTION 1 1/2" = 1'-0"

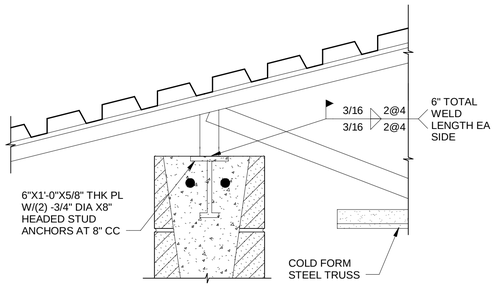

A S-43-102 DETAIL 1 1/2" = 1'-0"

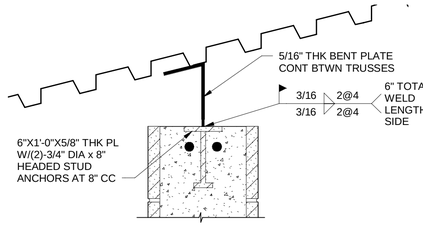

B S-43-102 DETAIL 1 1/2" = 1'-0"

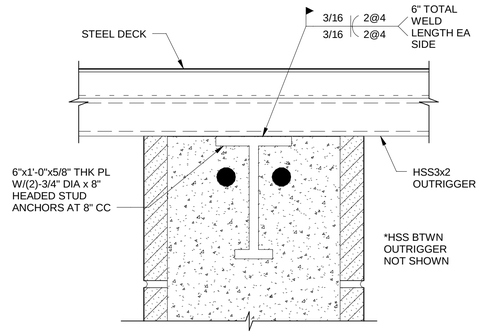

C S-43-501 DETAIL 3" = 1'-0"

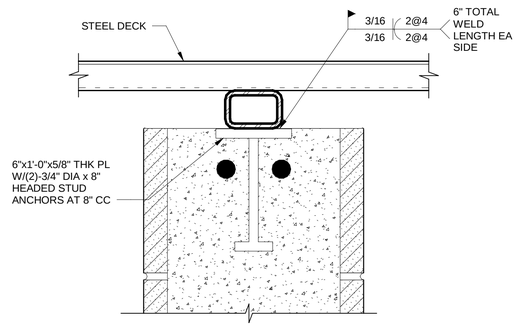

D S-43-501 DETAIL 3" = 1'-0"

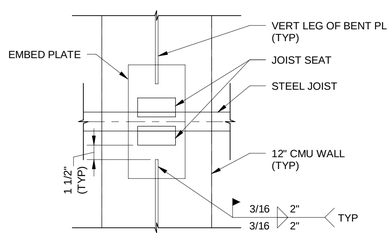

E S-43-102 DETAIL 1 1/2" = 1'-0"

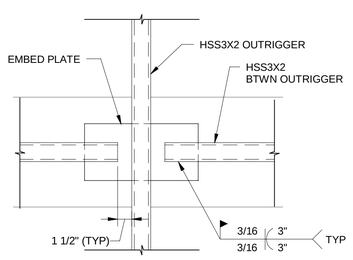

F S-43-102 DETAIL 1 1/2" = 1'-0"

BLACK & VEATCH
Black & Veatch Corporation
Kansas City, Missouri

olsson

THIS DOCUMENT WAS ORIGINALLY ISSUED AND SEALED ON JANUARY 24, 2023 BY DOUGLAS L. DUNCAN, A LICENSED PROFESSIONAL ENGINEER IN THE STATE OF ARKANSAS, E-18748

BEAVER WATER DISTRICT

WESTERN CORRIDOR PUMP STATION

100% SET

REVISIONS AND RECORD OF ISSUE

DESIGNED:	DLD
DETAILED:	SMH
CHECKED:	BSB
APPROVED:	DLD
DATE:	JANUARY 24, 2023
PROJECT NO.:	405654

ELECTRICAL BUILDING

STRUCTURAL

MISCELLANEOUS DETAILS

S-43-501

OF 159

(SCALE BAR IS 4" AT FULL SCALE) 0 1/2 1 2 3 4

PLOTTED: 1/20/2023 7:28:38 AM
FILE: BIM 360://405654 - BWD Western Corridor Pump Station/405654-43-ELECTRICAL BUILDING.rvt
D11000

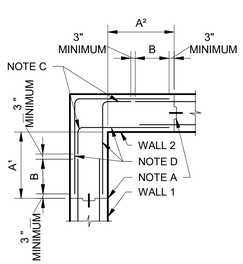

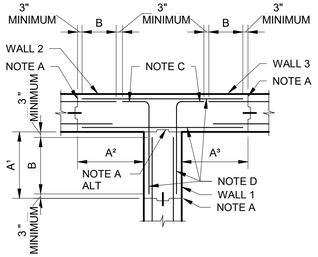

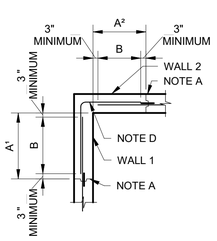

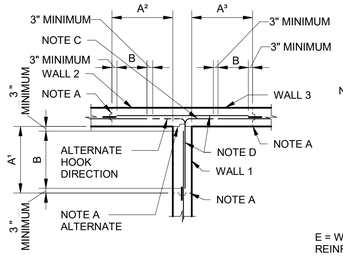

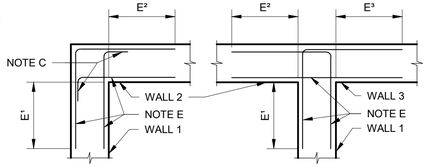

A = VERTICAL CONSTRUCTION JOINT NEAREST TO WALL CORNER.

A (ALTERNATE) = ALTERNATE VERTICAL CONSTRUCTION JOINT NEAREST TO WALL CORNER IN T WALL JOINT WHICH DOES NOT REQUIRE WATERSTOP.

A^X = DISTANCE FROM INSIDE CORNER FACE TO NEAREST VERTICAL CONSTRUCTION JOINT IN SIMILARLY NUMBERED WALL. A^X SHALL NOT BE LESS THAN DIMENSIONS INDICATED BY THESE DETAILS; NOR GREATER THAN INDICATED ON PLAN DRAWINGS; BUT IN ANY CASE SHALL NOT EXCEED 30 FEET IN LIQUID CONTAINMENT STRUCTURES OR 40 FEET IN OTHER STRUCTURES. IN T WALL JOINTS WHICH DO NOT REQUIRE WATERSTOP, A1 MAY BE ZERO.

B = OPTIONAL SPLICE LOCATION UNLESS SPECIFICALLY NOTED ON PLAN DRAWINGS. SPLICE LENGTH SHALL NOT BE LESS THAN THAT REQUIRED FOR TOP BARS AS SHOWN IN TABLE ON THIS SHEET. USE SPLICE LENGTH FOR THE SMALLER OF THE TWO BARS BEING SPLICED.

C = STANDARD HOOK

D = TYPICAL CORNER REINFORCEMENT. SIZE SHALL MATCH LARGEST ADJACENT WALL HORIZONTAL REINFORCEMENT; SPACING SHALL MATCH MINIMUM ADJACENT WALL HORIZONTAL REINFORCEMENT SPACING.

E = WHERE SPECIFICALLY NOTED ON THE DRAWINGS, ADDITIONAL CORNER REINFORCEMENT SHALL BE PLACED IN BOTH FACES OF THE INDICATED CORNER OVER THE FULL HEIGHT. ADDITIONAL CORNER REINFORCEMENT SHALL BE OF THE SAME SIZE AND SPACING AS THE MAIN CORNER REINFORCEMENT. PLACE ADDITIONAL REINFORCEMENT ALTERNATELY WITH, AND EQUAL DISTANCE BETWEEN, MAIN CORNER REINFORCEMENT.

E^X = DISTANCE FROM INSIDE CORNER FACE TO TERMINATION OF ADDITIONAL CORNER REINFORCEMENT IN SIMILARLY NUMBERED WALL. E^X SHALL NOT BE LESS THAN 0.20 THE CLEAR SPAN DISTANCE MEASURED HORIZONTALLY BETWEEN THIS CORNER AND THE NEXT OR 0.40 THE CLEAR SPAN DISTANCE OR CANTILEVERED DISTANCE MEASURED VERTICALLY, WHICHEVER IS SMALLER, BUT NOT LESS THAN 3'-0".

CONTRACTORS OPTION: E BAR TAILS MAY BE SPLICED USING LAPPED SPLICE LENGTHS FOR TOP BARS. SPLICES SHALL NOT BE LOCATED IN THE CORNER AREA COMMON TO BOTH WALLS AND SHALL CLEAR HOOK ENDS BY 3" MINIMUM.

MAIN REINFORCEMENT FOR ALL STRUCTURES

ADDITIONAL REINFORCEMENT WHERE SPECIFICALLY NOTED ON THE DRAWINGS

NOTES:
1. VERTICAL REINFORCEMENT IS NOT SHOWN.
2. THESE DETAILS SHALL BE APPLICABLE TO ALL WALL CORNERS UNLESS NOTED OTHERWISE ON THE DRAWINGS.

TYPICAL HORIZONTAL CORNER REINFORCEMENT DETAILS

NO SCALE

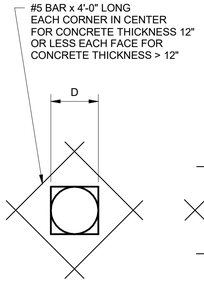

FOR OPENINGS
12" < = D < = 21"

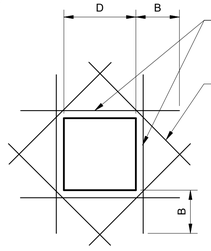

FOR RECTANGULAR OPENINGS
21" < D < = 54"

DIAGONAL BAR LENGTH

THICKNESS OF CONCRETE	DIAGONAL BAR SIZE	RECTANGULAR OPENING	CIRCULAR OPENING
< 12"	#4	3'-0"	D+12"
12" TO 18"	#5	3'-0"	D+12"
> 18"	#6	3'-0"	D+12"

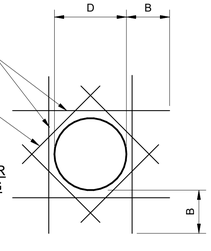

FOR CIRCULAR OPENINGS
21" < D < = 54"

B = THE REQUIRED LENGTH FOR LAPPED SPLICE FOR TOP BARS AS SHOWN ON THIS SHEET

TYPICAL REQUIRED UNLESS ADDITIONAL REINFORCEMENT SPECIFICALLY INDICATED AT OPENINGS ON DRAWINGS

TYPICAL EXTRA REINFORCEMENT AT OPENINGS 12" TO < = 54"

NO SCALE

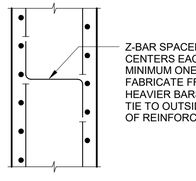

SPACERS FOR WALL REINFORCEMENT

NO SCALE

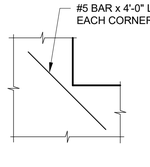

TYPICAL EXTRA REINFORCEMENT AT ISOLATED RE-ENTRANT CORNERS

NO SCALE

NOTE:
TYPICAL REQUIRED UNLESS ADDITIONAL REINFORCEMENT SPECIFICALLY INDICATED AT OPENINGS ON DRAWINGS

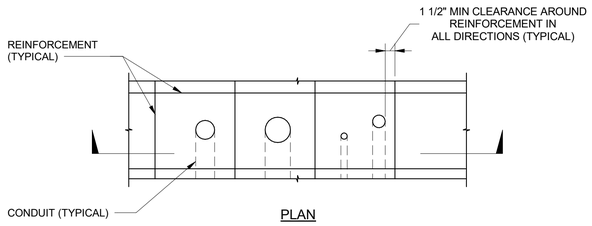

PLAN

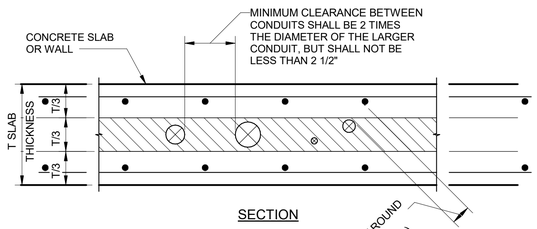

SECTION

NOTES:
1. PLACE CONDUIT ONLY IN SHADED AREA.
2. FOR CONDUIT REQUIREMENTS SEE THE ELECTRICAL DRAWINGS AND SPECIFICATIONS.
3. CONDUIT THAT IS TOO LARGE OR CONGESTED TO FIT WITHIN THE SLAB AND REINFORCEMENT AS INDICATED SHALL BE ROUTED BELOW THE SLAB AS INDICATED IN THE ELECTRICAL SPECIFICATIONS OR ON THE DRAWINGS.

CONDUIT PLACING DETAIL

1" = 1'-0"

STANDARD CONCRETE REINFORCEMENT DETAILS

NO SCALE

NOTES

1. DETAILS ON THIS DRAWING APPLY TO ALL DRAWINGS UNLESS OTHERWISE NOTED.
2. WORK THIS DRAWING WITH THE STANDARD CONCRETE JOINT DETAILS.

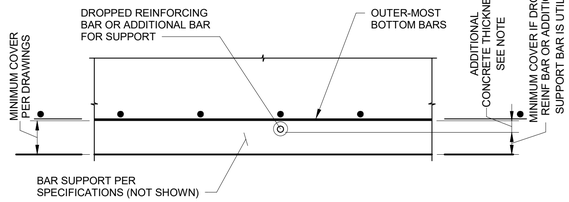

NOTE:
WHERE DROPPED REINFORCING BARS OR ADDITIONAL BARS ARE UTILIZED AS SUPPORT BARS IN THE PLACEMENT OF THE BOTTOM MAT REINFORCING, CONCRETE COVER TO THE SUPPORT BARS SHALL NOT BE LESS THAN REQUIRED PER THE DRAWINGS AND THE CONCRETE THICKNESS OF THE SLAB OR FOOTING SHALL BE INCREASED, EQUAL TO THE DIAMETER OF THE SUPPORT BAR, AT NO ADDITIONAL COST. ALTERNATIVELY, UPON THE APPROVAL OF THE ENGINEER, A SHALLOWER BOLSTER MADE BE USED TO MAINTAIN THE MINIMUM CLEAR COVER FOR THE BOTTOM MAT REINFORCING.

REINFORCING SUPPORT DETAIL

1" = 1'-0"

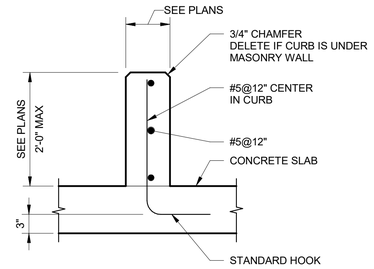

NOTE:
WHEN CURB WIDTH EXCEEDS 8", PROVIDE ABOVE REINFORCEMENT IN EACH FACE OF CURB

TYPICAL CONCRETE CURB DETAIL

1" = 1'-0"

LENGTH OF LAPPED SPLICES FOR REINFORCEMENT (INCHES)

UNLESS NOTED OTHERWISE ON THE DRAWINGS

BAR SIZE *	BEAMS & COLUMNS		WALLS & SLABS		BAR SIZE *
	**TOP BARS	OTHERS	**TOP BARS	OTHERS	
#3	16	16	16	16	#3
#4	19	16	19	16	#4
#5	24	18	24	18	#5
#6	33	26	29	22	#6
#7	55	42	48	37	#7
#8	69	53	60	46	#8
#9	84	65	74	57	#9
#10	103	79	91	70	#10
#11	122	94	108	83	#11

* LAP SPLICE LENGTH FOR BARS OF DIFFERENT SIZES SHALL BE THE GREATER OF THE SMALL BAR LAP LENGTH OR 0.75x THE LARGER BAR LAP LENGTH.

** TOP BARS ARE HORIZONTAL BARS SO PLACED THAT MORE THAN 12" OF CONCRETE IS CAST IN THE MEMBER BELOW THE BAR. HORIZONTAL BARS IN WALLS ARE TO BE PROVIDED WITH LAP LENGTHS AS REQUIRED FOR TOP BARS. VERTICAL BARS MAY BE CONSIDERED AS OTHER BARS.

CONCRETE COVER FOR REINFORCEMENT

UNLESS NOTED OTHERWISE ON THE DRAWINGS

LOCATION	SPECIFIED COVER
UNFORMED SURFACES ADJACENT TO EXCAVATION	3"
SURFACES INSIDE OF OZONE CONTACTORS EXPOSED TO OZONE IN WATER OR AIR	3"
TOP SURFACES OF SLABS THAT ARE SUBMERGED	3"
FORMED SURFACES THAT ARE SUBMERGED, AND FORMED OR TOP SURFACES EXPOSED TO WEATHER, SATURATED AIR, OR EARTH	2"
OTHER LOCATIONS:	
BEAMS AND GIRDERS	1 1/2"
SLABS, WALLS AND JOISTS: #6 AND LARGER	1 1/2"
#5 AND SMALLER	1"

NOTES:

1. COVER IS MEASURED TO NEAREST BAR, STIRRUP, TIE, OR SPIRAL, AS APPLICABLE.
2. TOLERANCES FOR CONCRETE COVER AND THE FABRICATION AND PLACING OF REINFORCEMENT SHALL CONFORM TO ACI 117.

12" 9" 36" 3" (0' 61" 122"

1" = 1'-0"

(SCALE BAR IS 4" AT FULL SCALE) 0 1/2 1 2 3 4

BLACK & VEATCH
Black & Veatch Corporation
Kansas City, Missouri

olsson

THIS DOCUMENT WAS ORIGINALLY ISSUED AND SEALED ON JANUARY 24, 2023 BY DOUGLAS L. DUNCAN, A LICENSED PROFESSIONAL ENGINEER IN THE STATE OF ARKANSAS, E-18748

BEAVER WATER DISTRICT

WESTERN CORRIDOR PUMP STATION

100% SET

REVISIONS AND RECORD OF ISSUE

DESIGNED:	KB/DLD
DETAILED:	PP
CHECKED:	BSB
APPROVED:	DLD
DATE:	JANUARY 24, 2023
PROJECT NO.:	405654

PUMP STATION

STRUCTURAL

STANDARD CONCRETE REINFORCMENT DETAILS

S-99-501

OF 159

PLOTTED: 1/20/2023 10:55:38 AM
FILE: BIM 360://405654 - BWD Western Corridor Pump Station/405654-42-PUMP STATION.rvt
D11000

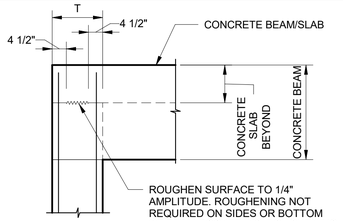

TOP OF WALL TO BEAM/SLAB

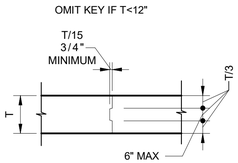

SLAB TO SLAB

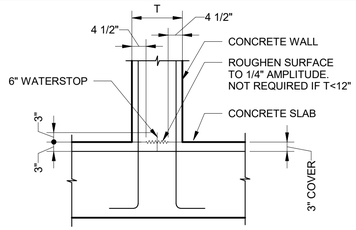

FOR T < 18"

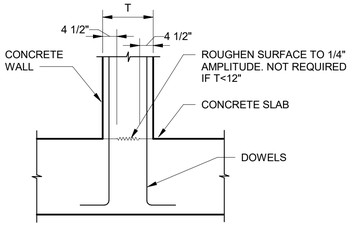

SLAB TO BOTTOM OF WALL

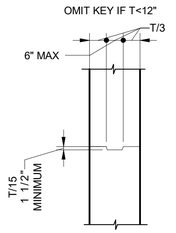

WALL TO WALL

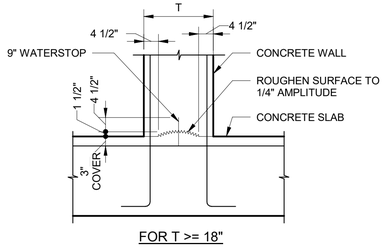

FOR T >= 18"

SLAB TO BOTTOM OF WALL

JOINTS WITHOUT WATERSTOPS

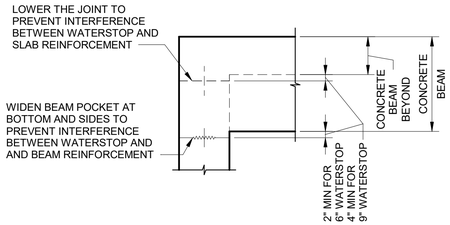

TOP OF WALL TO BEAM/SLAB

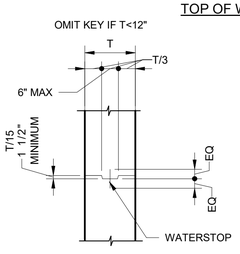

WALL TO WALL

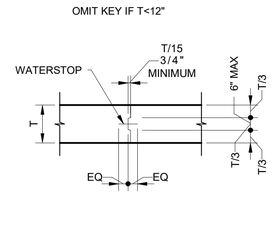

SLAB TO SLAB (T>=12")

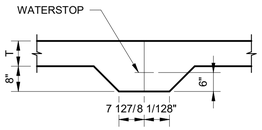

SLAB TO SLAB (T<12")

JOINTS WITH WATERSTOPS

NOTES:
1. REINFORCEMENT STEEL IS CONTINUOUS THROUGH ALL CONSTRUCTION JOINTS.
2. "CSJ W/ WS" - CONSTRUCTION JOINT WITH WATERSTOP.
3. "CSJ" - CONSTRUCTION JOINT WITHOUT WATERSTOP.
4. UNLESS NOTED OTHERWISE, WATERSTOPS MAY BE STEEL OR PVC.
5. WATERSTOP SIZE SHALL BE 6" FOR WALLS AND SLABS 18" OR LESS IN THICKNESS, AND SHALL BE 9" FOR WALLS AND SLABS THICKER THAN 18".

A TYPICAL CONSTRUCTION JOINTS

1/2" = 1'-0"

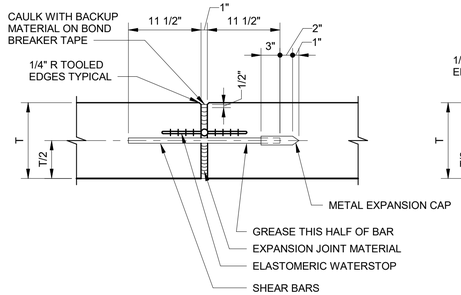

SLABS

EXPANSION JOINTS

NOTE:
"EJ W/ WS" - EXPANSION JOINT WITH ELASTOMERIC WATERSTOP
"EJ" - EXPANSION JOINT WITHOUT WATERSTOP

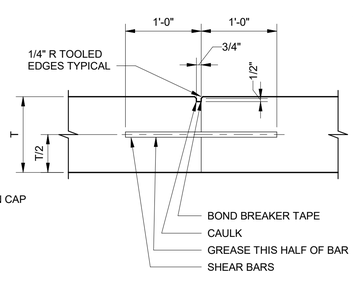

SLABS

CONTRACTION JOINTS

NOTE:
"CJ" - CONTRACTION JOINT WITHOUT WATERSTOP

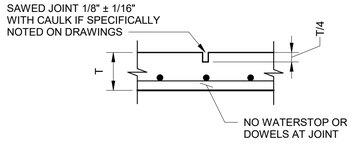

NOTES:
1. TYPICAL CONTROL JOINT NOTES NOT APPLICABLE FOR SAWED CONTRACTION JOINT.
2. "SJ" SAWED JOINT WITH NO WATERSTOP.
3. JOINT FORMED WITH TOOL OR INSERT STRIP MAY BE SUBSTITUTED FOR SAWED TYPE ONLY WITH PRIOR ACCEPTANCE BY THE ENGINEER.
4. IF SINGLE LAYER REINFORCEMENT, EVERY OTHER BAR IS DISCONTINUOUS AT JOINT. IF 2 LAYER REINFORCEMENT, TOP LAYER IS COMPLETELY DISCONTINUOUS AT JOINT.

SAWED CONTRACTION JOINT SLAB ON GRADE

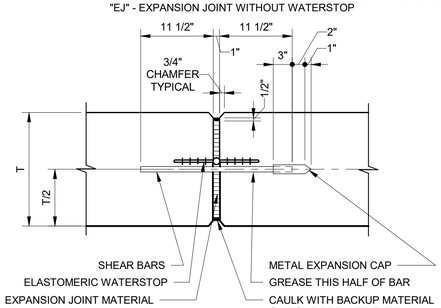

WALLS

EXPANSION JOINTS

NOTE:
"EJ W/ WS" - EXPANSION JOINT WITH ELASTOMERIC WATERSTOP
"EJ" - EXPANSION JOINT WITHOUT WATERSTOP

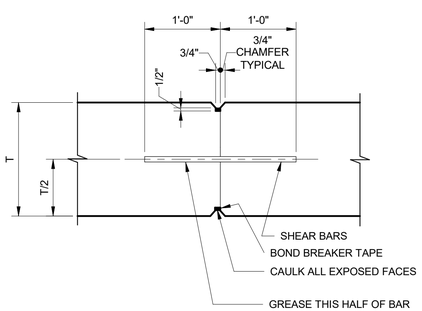

WALLS

CONTRACTION JOINTS

NOTE:
"CJ" - CONTRACTION JOINT WITHOUT WATERSTOP

B TYPICAL CONTROL JOINTS

1" = 1'-0"

NOTES:
1. PROVIDE 3/4" SHEAR BARS @ 1'-6" CENTERS ACROSS JOINT UNLESS NOTED OTHERWISE.
2. REINFORCING STEEL SHALL NOT BE EXTENDED ACROSS JOINT UNLESS NOTED OTHERWISE. SHEAR BARS SHALL BE SMOOTH FREE FROM RUST OR SCALE, AND GREASED TO PREVENT BOND (ONE HALF BAR ONLY).
3. WATERSTOP SIZE SHALL BE 6" FOR WALLS AND SLABS LESS THAN 18" IN THICKNESS, AND SHALL BE 9" FOR WALLS AND SLABS THICKER THAN 18".

NOTES

1. DETAILS ON THIS DRAWING APPLY TO ALL DRAWINGS UNLESS NOTED OTHERWISE.
2. WORK THIS DRAWING WITH THE STANDARD CONCRETE REINFORCEMENT DETAILS.
3. AT WALL JOINTS AND AT WALL BASE JOINTS, SECURE ALL ELASTOMERIC WATERSTOPS IN THE CORRECT POSITION USING HOG RINGS OR GROMMETS SPACED AT 12 INCHES ALONG THE LENGTH OF THE WATERSTOP AND WIRE TIE TO ADJACENT REINFORCING STEEL.
4. AT SLAB JOINTS AND FOOTING JOINTS, ENSURE SPACE BENEATH AND AROUND WATERSTOP IS COMPLETELY FILLED WITH CONSOLIDATED CONCRETE. DURING OPERATION, MAKE VISUAL INSPECTION OF ENTIRE WATERSTOP AREA. LIMIT CONCRETE PLACEMENT TO ELEVATION OF WATERSTOP IN FIRST LIFT. RAISE ELASTOMERIC WATERSTOPS TO CONFIRM FULL CONSOLIDATION WITHOUT VOIDS. PLACE REMAINING CONCRETE TO FULL DEPTH OF SLAB.

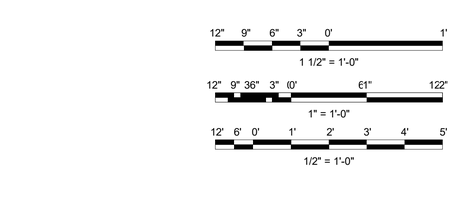

BLACK & VEATCH
Black & Veatch Corporation
Kansas City, Missouri

olsson

THIS DOCUMENT WAS ORIGINALLY ISSUED AND SEALED ON JANUARY 24, 2023 BY DOUGLAS L. DUNCAN, A LICENSED PROFESSIONAL ENGINEER IN THE STATE OF ARKANSAS, E-18748

BEAVER WATER DISTRICT

WESTERN CORRIDOR PUMP STATION

100% SET

REVISIONS AND RECORD OF ISSUE

DESIGNED:	KB/DLD
DETAILED:	PP
CHECKED:	BSB
APPROVED:	DLD
DATE:	JANUARY 24, 2023
PROJECT NO.:	405654

PUMP STATION

STRUCTURAL

STANDARD CONCRETE JOINT DETAILS

S-99-502

OF 159

PLOTTED: 1/20/2023 10:55:39 AM
FILE: BIM 360://405654 - BWD Western Corridor Pump Station/405654-42-PUMP STATION.rvt
D1:1000

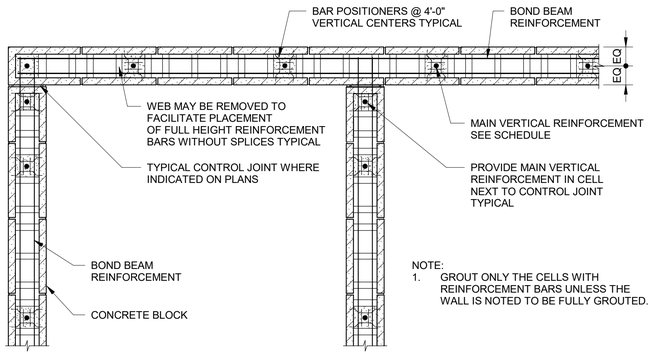

TYPICAL REINFORCEMENT WITH CORNER CONTROL JOINTS

SINGLE CURTAIN VERTICAL REINFORCEMENT SHOWN.
DOUBLE CURTAIN SIMILAR EXCEPT BARS POSITIONED EACH FACE, SEE ADJACENT DETAIL.

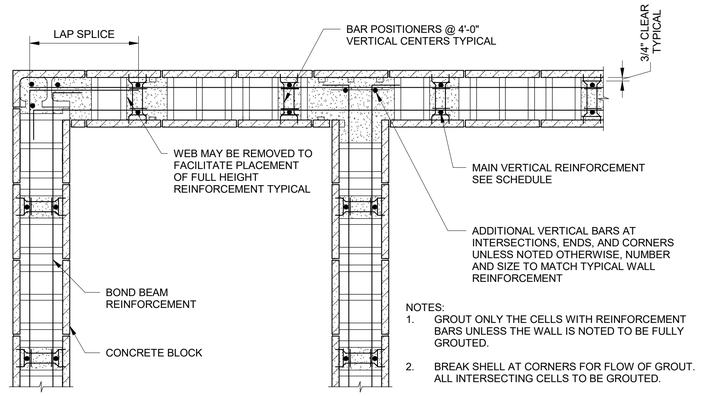

TYPICAL REINFORCEMENT WITHOUT CORNER CONTROL JOINTS

DOUBLE CURTAIN VERTICAL REINFORCEMENT SHOWN.
SINGLE CURTAIN SIMILAR EXCEPT BARS CENTERED IN WALL, SEE ADJACENT DETAIL.

CMU WALL AND MAIN REINFORCEMENT SCHEDULE

BUILDING	WALL	BLOCK THICKNESS	GROUTING (NOTE 1)	MAIN VERTICAL REINFORCEMENT			MAIN HORIZONTAL REINFORCEMENT	WALL CONTROL JOINTS
				BARS PER REINFORCED CELL (NOTE 2)	BAR SIZE	MAX SPACING OF VERTICAL REINFORCEMENT		
PUMP STATION (PUMP ROOM)	NORTH	12"	R	2	#6	24"	LADDER TYPE JOINT REINFORCEMENT AT 16" CENTERS	(SEE PLAN FOR LOCATIONS)
	SOUTH	12"	R	2	#6	24"		
	EAST	12"	R	2	#6	24"		
	WEST	12"	R	2	#6	24"		
PUMP STATION (ELECTRICAL/ CONTROL ROOM)	NORTH	12"	R	1	#5	32"		
	SOUTH	12"	R	1	#5	32"		
	EAST	12"	F	1	#5	32"		
	WEST	12"	F	1	#5	32"		
	INTERIOR	8"	R	1	#5	48"		
ELECTRICAL BUILDING	NORTH	12"	R	1	#5	32"	LADDER TYPE JOINT REINFORCEMENT AT 16" CENTERS	(SEE PLAN FOR LOCATIONS)
	SOUTH	12"	R	1	#5	32"		
	EAST	12"	F	1	#5	32"		
	WEST	12"	R	1	#5	32"		
	INTERIOR	8"	R	1	#5	48"		

NOTES:
1. "F" INDICATES A FULLY GROUTED WALL, "R" INDICATES TO GROUT ONLY THE REINFORCED CELLS.
2. "1" INDICATES A SINGLE BAR CENTERED IN WALL, "2" INDICATES DOUBLE CURTAIN REINFORCEMENT, WITH ONE BAR EACH FACE OF CELL.
3. SEE THE OTHER STRUCTURAL DRAWINGS FOR ADDITIONAL REINFORCEMENT DETAILS AT CONNECTIONS, TOPS OF WALLS, JAMBS, LINTELS, ETC.
4. CMU = CONCRETE MASONRY UNIT

TYPICAL MASONRY REINFORCEMENT PLANS

3/4" = 1'-0"

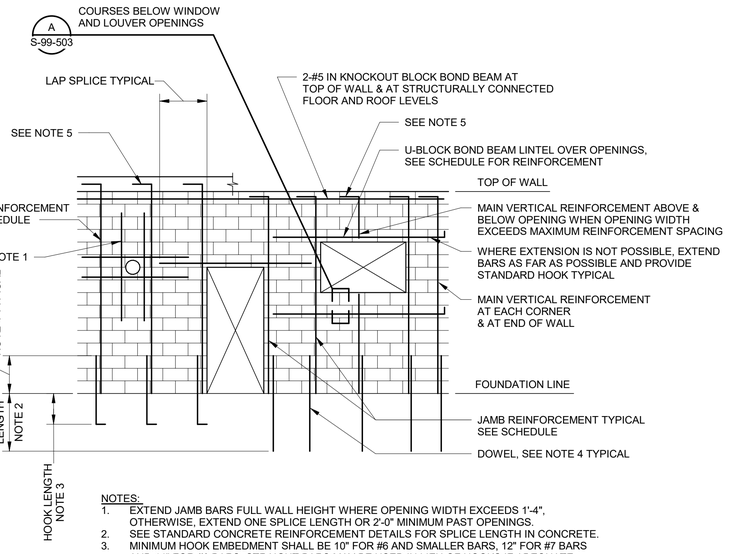

NOTES:
1. EXTEND JAMB BARS FULL WALL HEIGHT WHERE OPENING WIDTH EXCEEDS 1'-4", OTHERWISE, EXTEND ONE SPLICE LENGTH OR 2'-0" MINIMUM PAST OPENINGS.
2. SEE STANDARD CONCRETE REINFORCEMENT DETAILS FOR SPLICE LENGTH IN CONCRETE.
3. MINIMUM HOOK EMBEDMENT SHALL BE 10" FOR #6 AND SMALLER BARS, 12" FOR #7 BARS AND 14" FOR #8 BARS. STRAIGHT BARS MAY BE USED IN LIEU OF HOOKS IF ADEQUATE CONCRETE THICKNESS IS AVAILABLE.
4. THE SIZE AND QUANTITY OF DOWEL BARS PER CELL SHALL MATCH THE SIZE AND QUANTITY OF MAIN VERTICAL BARS IN THE CELL, UNLESS INDICATED OTHERWISE.
5. WHERE METAL OR PRECAST CONCRETE ROOFS ATTACH TO TOP BOND BEAM, VERTICAL WALL REINFORCEMENT SHALL TERMINATE 2 INCHES FROM THE TOP OF THE BOND BEAM WITH A STANDARD HOOK. WHERE CAST-IN-PLACE CONCRETE ROOFS ATTACH TO TOP BOND BEAM, VERTICAL WALL REINFORCEMENT SHALL TERMINATE 2 INCHES FROM THE TOP OF THE CONCRETE SLAB WITH A STANDARD HOOK. WHERE WALLS ARE NON-LOAD-BEARING, VERTICAL WALL REINFORCEMENT SHALL TERMINATE AS A STRAIGHT BAR 2 INCHES FROM TOP OF BOND BEAM.

TYPICAL MASONRY REINFORCEMENT ELEVATION

1/4" = 1'-0"

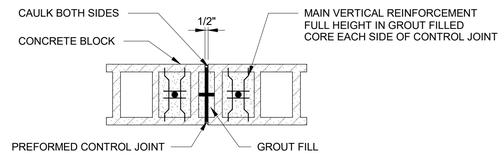

STRETCHER BLOCK TYPE

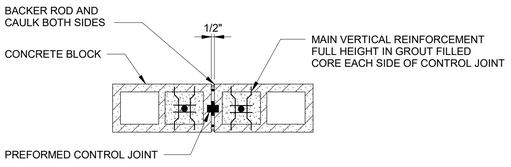

SASH BLOCK TYPE

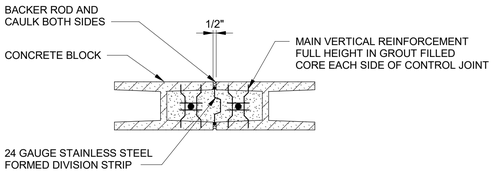

H-BLOCK TYPE

NOTES:
1. LADDER TYPE JOINT REINFORCEMENT IS DISCONTINUOUS AT CONTROL JOINT.
2. BOND BEAM REINFORCEMENT IS DISCONTINUOUS THROUGH CONTROL JOINT, EXCEPT REINFORCEMENT SHALL BE CONTINUOUS AT CONTROL JOINTS WHERE BOND BEAMS ARE LOCATED AT ROOF AND FLOOR JOIST BEARING.
3. CONTROL JOINT IS CONTINUOUS FULL WALL HEIGHT.
4. CONTROL JOINT LOCATIONS SHALL BE AS INDICATED ON THE PLANS.
5. SEE ARCHITECTURAL DRAWINGS FOR LOCATION OF VENEER CONTROL OR EXPANSION JOINTS. CONTROL JOINTS IN CMU BACKUP AND VENEER DO NOT ALIGN.

TYPICAL CMU CONTROL JOINT

1" = 1'-0"

LENGTH OF LAP SPLICES FOR REINFORCEMENT (INCHES)

(f'_m 2500 PSI, IBC 2012, 2015 & 2018)

BAR SIZE	8" CONCRETE MASONRY UNIT		12" CONCRETE MASONRY UNIT	
	SINGLE REINFORCEMENT	DOUBLE REINFORCEMENT	SINGLE REINFORCEMENT	DOUBLE REINFORCEMENT
4	12	20	12	17
5	18	32	12	27
6	34	-	21	51
7	47	-	29	(71)
8	(71)	-	45	(110)

1. NON-CONTACT LAP SPLICES SHALL NOT BE USED.
2. ( ) BRACKETED SPLICE LENGTHS NOT RECOMMENDED. USE MECHANICAL CONNECTORS OR A FULL HEIGHT REINFORCEMENT BAR.

GENERAL NOTES

1. THE DETAILS ON THIS SHEET ARE APPLICABLE TO ALL CONCRETE MASONRY CONSTRUCTION.SPECIAL NOTES, SECTIONS AND DETAILS SPECIFICALLY NOTED ON THE DESIGN DRAWINGS SHALL BE APPLICABLE IN LIEU OF THESE TYPICAL DETAILS.
2. FOR MISCELLANEOUS APPURTENANCES INCLUDING EMBEDMENTS, BRACING, STEEL OR PRECAST LINTELS, VENEER, FLASHING, WEEPS, INSULATION, SEALING, CAULKING AND EMBEDDED PIPE AND ELECTRICAL CONDUIT, SEE THE DESIGN DRAWINGS.
3. WORK THIS DRAWING WITH THE STANDARD CONCRETE MASONRY LINTEL & JAMB REINFORCEMENT DETAILS DRAWING.

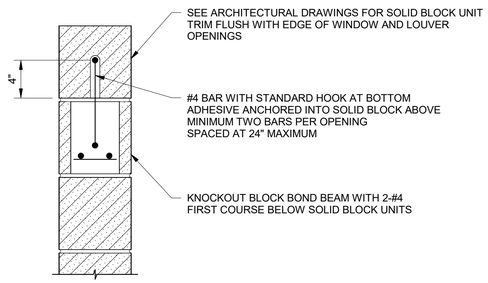

A S-99-503 COURSES BELOW WINDOW AND LOUVER OPENING

1 1/2" = 1'-0"

12" 9" 6" 3" 0" 1'
1 1/2" = 1'-0"

4' 2' 0' 4' 8'
1/4" = 1'-0"

12" 6" 0' 1' 2' 3'
3/4" = 1'-0"

(SCALE BAR IS 4" AT FULL SCALE) 0 1/2 1 2 3 4

BLACK & VEATCH
Black & Veatch Corporation
Kansas City, Missouri

olsson

THIS DOCUMENT WAS ORIGINALLY ISSUED AND SEALED ON JANUARY 24, 2023 BY DOUGLAS L. DUNCAN, A LICENSED PROFESSIONAL ENGINEER IN THE STATE OF ARKANSAS, E-18748

BEAVER WATER DISTRICT

WESTERN CORRIDOR PUMP STATION

100% SET

REVISIONS AND RECORD OF ISSUE

DESIGNED:	KB/DLD
DETAILED:	PP
CHECKED:	BSB
APPROVED:	DLD
DATE:	JANUARY 24, 2023
PROJECT NO.:	405654

PUMP STATION

STRUCTURAL

STANDARD CONCRETE MASONRY REINFORCEMENT DETAILS

S-99-503

OF 159

PLOTTED: 1/20/2023 10:55:40 AM
FILE: BIM 360://405654 - BWD Western Corridor Pump Station/405654-42-PUMP STATION.rvt
D11000

JAMB SCHEDULE

BUILDING	WALL	BLOCK THICKNESS	OPENING SIZE	JAMBS			REMARKS
				NUMBER OF REINFORCED CELLS	BARS PER REINFORCED CELL	BAR SIZE	
PUMP STATION BUILDING	NORTH	12"	≤4'-0"	1	1 (CENTERED)	#6	
			12'-0"	2	2 (ONE EACH FACE)	#6	
	SOUTH	12"	≤4'-0"	1	1 (CENTERED)	#6	
	EAST	12"	≤4'-0"	1	1 (CENTERED)	#5	ELECTRICAL/CONTROL ROOM
			4'-0" TO 8'-0"	2	2 (ONE EACH FACE)	#5	
			8'-0" TO 12'-0"	2	2 (ONE EACH FACE)	#6	PUMP ROOM
			12'-0" TO 18'-0"	3	2 (ONE EACH FACE)	#6	PUMP ROOM
	WEST	12"	≤4'-0"	1	1 (CENTERED)	#5	#6 FOR PUMP ROOM
			4'-0" TO 8'-0"	2	2 (ONE EACH FACE)	#5	#6 FOR PUMP ROOM
			12'-0" TO 18'-0"	3	2 (ONE EACH FACE)	#6	
	INTERIOR	8"	≤4'-0"	1	1 (CENTERED)	#5	
ELECTRICAL BUILDING	SOUTH	12"	≤4'-0"	1	1 (CENTERED)	#5	
			4'-0" TO 10'-0"	1	1 (CENTERED)	#5	
	EAST	12"	≤4'-0"	1	1 (CENTERED)	#5	
	WEST	12"	≤4'-0"	1	1 (CENTERED)	#5	
	INTERIOR	8"	≤4'-0"	1	1 (CENTERED)	#5	

NOTES:
1. AN INTERIOR WALL IS A WALL IN WHICH NO PORTION OF THE WALL IS EXPOSED TO THE EXTERIOR.
2. REINFORCE JAMBS AS INDICATED UNLESS NOTED OTHERWISE ON THE DRAWINGS.

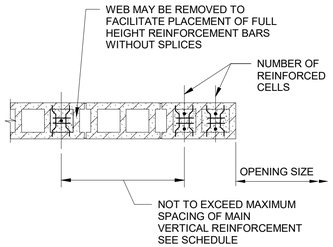

JAMB - PLAN

LINTEL SCHEDULE

BUILDING	WALL	BLOCK THICKNESS	OPENING SIZE	LINTELS			REMARKS
				DEPTH	BOTTOM REINFORCEMENT	TOP REINFORCEMENT	
PUMP STATION BUILDING	NORTH	12"	≤4'-0"	8"	2-#4	2-#4	
			12'-0"	16"	2-#6	2-#6	
	SOUTH	12"	≤4'-0"	8"	2-#4	2-#4	
	EAST	12"	≤4'-0"	8"	2-#4	2-#4	
			4'-0" TO 8'-0"	16"	2-#5	2-#5	
			8'-0" TO 12'-0"	16"	2-#6	2-#6	
			12'-0" TO 16'-8"	24"	3-#6	3-#6	
	WEST	12"	≤4'-0"	8"	2-#4	2-#4	
			4'-0" TO 8'-0"	16"	2-#5	2-#5	
			12'-0" TO 16'-8"	24"	3-#6	3-#6	
	INTERIOR	8"	≤4'-0"	8"	2-#4	---	
ELECTRICAL BUILDING	SOUTH	12"	≤4'-0"	16"	1-#5	1-#5	
			4'-0" TO 10'-0"	24"	2-#5	2-#5	
	EAST	12"	≤4'-0"	16"	1-#5	1-#5	
	WEST	12"	≤4'-0"	16"	1-#5	1-#5	
	INTERIOR	8"	≤4'-0"	16"	1-#5	1-#5	

NOTES:
1. BEAR ALL LINTELS A MINIMUM 2'-0" AT EACH END.
2. REINFORCED LINTELS AS INDICATED UNLESS NOTED OTHERWISE ON THE DRAWINGS.

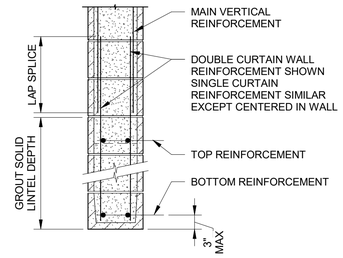

LINTEL - SECTION

TYPICAL MASONRY JAMB SCHEDULE AND PLAN

3/4" = 1'-0"

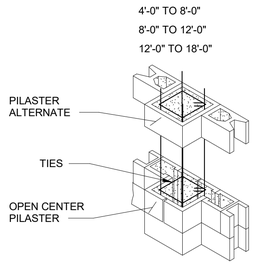

TYPICAL OPEN CENTER PILASTER

NOTES:
1. ALL VERTICAL REINFORCEMENT SHALL BE FULLY DOWELED INTO THE SUPPORTING FOUNDATION WITH DOWELS MATCHING THE VERTICAL REINFORCEMENT.
2. LAP SPLICE LENGTHS PER SCHEDULE.

PILASTER SCHEDULE

TYPE	NOMINAL SIZE	VERTICAL REINFORCEMENT	TIES	REMARKS
P1				
P2				

TYPICAL CONCRETE MASONRY PILASTERS

3/8" = 1'-0"

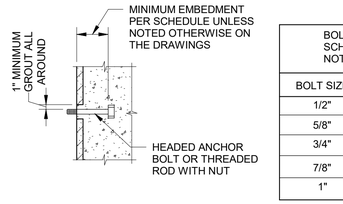

BOLT EMBEDMENT SCHEDULE UNLESS NOTED OTHERWISE	
BOLT SIZE	EMBED
1/2"	4"
5/8"	4"
3/4"	5"
7/8"	6"
1"	7"

NOTE:
MINIMUM BOLT SPACING SHALL BE (12) BOLT DIAMETERS WITH A MINIMUM EDGE DISTANCE OF (6) BOLT DIAMETERS AND WITH A MINIMUM OF 6" TO END OF WALL, UNLESS NOTED OTHERWISE.

TYPICAL MASONRY ANCHOR BOLT DETAIL

3/4" = 1'-0"

TYPICAL MASONRY LINTEL SCHEDULE AND SECTION

3/4" = 1'-0"

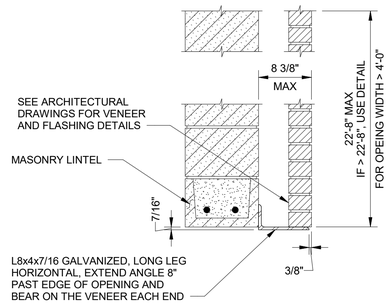

OPENING WIDTH <= 4'-0"

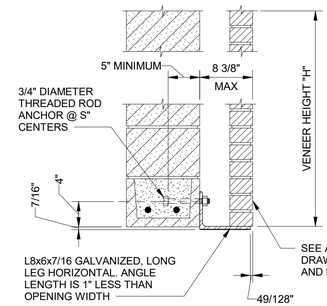

OPENING WIDTH > 4'-0"

H	S
0'-0" TO 15'-4"	24"
15'-5" TO 22'-8"	16"
22'-9" TO 46'-0"	8"

NOTE:
1. WHERE DIMENSION FROM FACE OF CMU TO OUTER FACE OF VENEER IS LESS THAN 8-3/8", TRIM HORIZONTAL ANGLE LEG TO MAINTAIN 3/8" INSET FROM VENEER, AND GRIND SMOOTH. GALVANIZE AFTER HORIZONTAL LEG IS TRIMMED.

VENEER SUPPORT AT OPENING

1" = 1'-0"

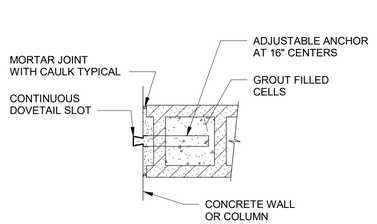

TYPICAL MASONRY WALL AT CONCRETE WALL OR COLUMN

1 1/2" = 1'-0"

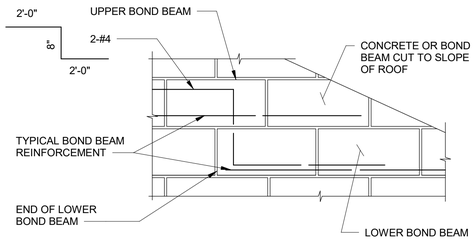

BOND BEAM STEP DETAIL

1" = 1'-0"

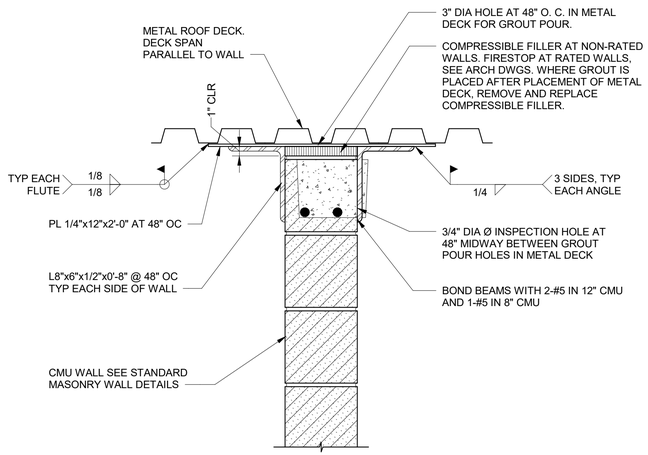

(CMU WALL PARALLEL TO DECK SPAN)

NON-LOAD BEARING CMU WALL BRACE DETAIL

1 1/2" = 1'-0"

GENERAL NOTES

1. THE DETAILS ON THIS SHEET ARE APPLICABLE TO ALL CONCRETE MASONRY CONSTRUCTION. SPECIAL NOTES, SECTIONS AND DETAILS SPECIFICALLY NOTED ON THE DESIGN DRAWINGS SHALL BE APPLICABLE IN LIEU OF THESE TYPICAL DETAILS.
2. FOR MISCELLANEOUS APPURTENANCES INCLUDING EMBEDMENTS, BRACING, STEEL OR PRECAST LINTELS, VENEER, FLASHING, WEEPS, INSULATION, SEALING, CAULKING AND EMBEDDED PIPE AND ELECTRICAL CONDUIT, SEE THE DESIGN DRAWINGS.
3. WORK THIS DRAWING WITH THE STANDARD CONCRETE MASONRY WALL REINFORCEMENT DETAILS.

12" 6" 0' 1' 2' 3'
3/4" = 1'-0"

12" 9" 36" 3' (0' 61" 122"
1" = 1'-0"

(SCALE BAR IS 4" AT FULL SCALE) 0 1/2 1 2 3 4

BLACK & VEATCH
Black & Veatch Corporation
Kansas City, Missouri

olsson

THIS DOCUMENT WAS ORIGINALLY ISSUED AND SEALED ON JANUARY 24, 2023 BY DOUGLAS L. DUNCAN, A LICENSED PROFESSIONAL ENGINEER IN THE STATE OF ARKANSAS, E-18748

BEAVER WATER DISTRICT

WESTERN CORRIDOR PUMP STATION

100% SET

REVISIONS AND RECORD OF ISSUE

DESIGNED:	KB/DLD
DETAILED:	PP
CHECKED:	BSB
APPROVED:	DLD
DATE:	JANUARY 24, 2023
PROJECT NO.:	405654

PUMP STATION

STRUCTURAL

STANDARD CONCRETE MASONRY LINTEL AND JAMB REINFORCEMENT DETAILS

S-99-504

OF 159

PLOTTED: 1/20/2023 11:34:07 AM
FILE: BIM 360://405654 - BWD Western Corridor Pump Station/405654-42-PUMP STATION.rvt
D11000

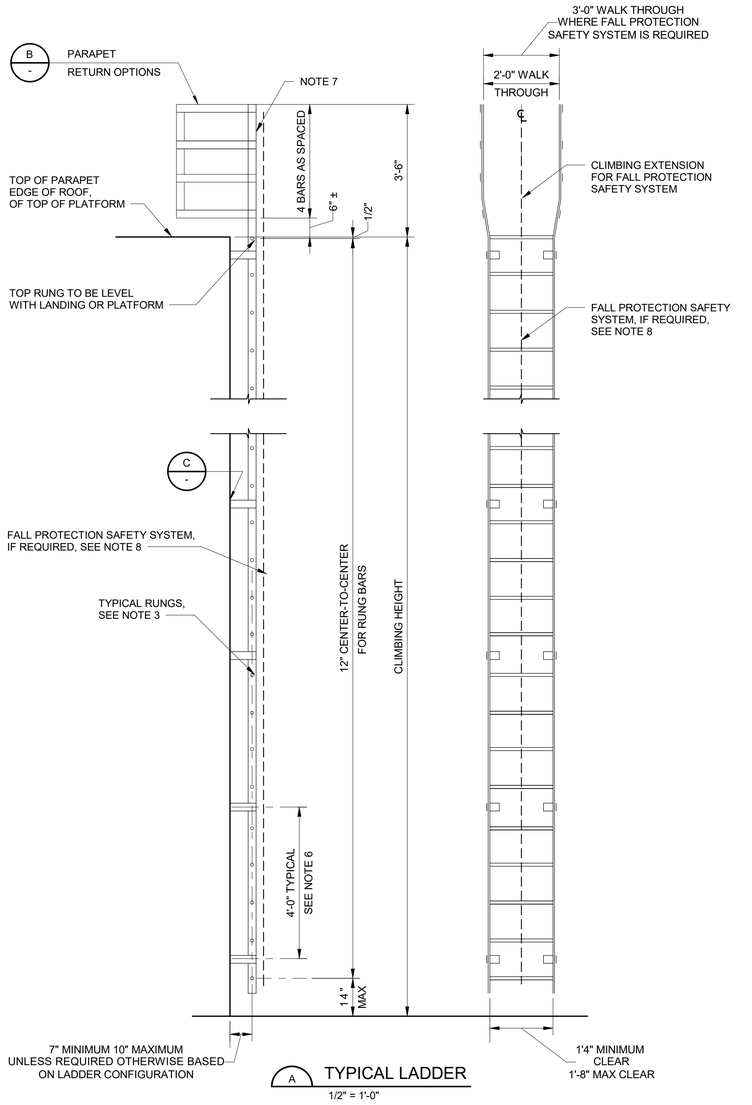

A TYPICAL LADDER

1/2" = 1'-0"

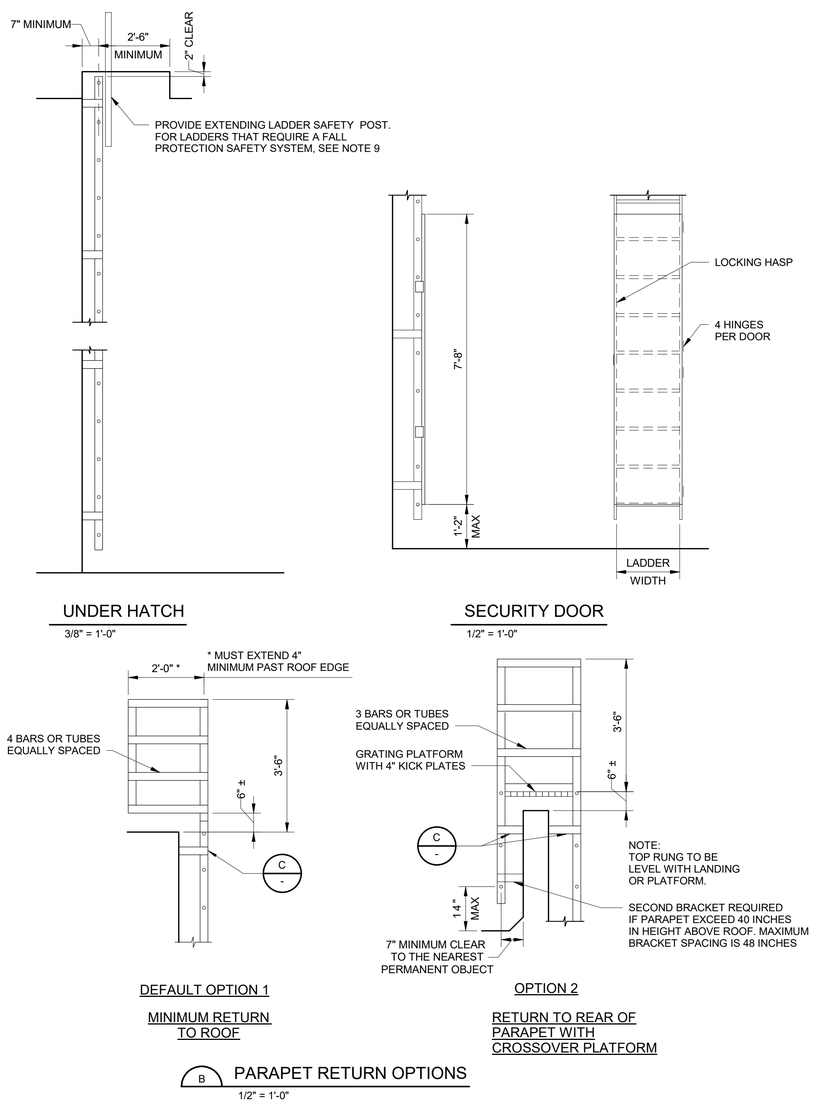

UNDER HATCH

3/8" = 1'-0"

DEFAULT OPTION 1

MINIMUM RETURN
TO ROOF

SECURITY DOOR

1/2" = 1'-0"

OPTION 2

RETURN TO REAR OF
PARAPET WITH
CROSSOVER PLATFORM

B PARAPET RETURN OPTIONS

1/2" = 1'-0"

USE OPTION 1 IF NONE INDICATED

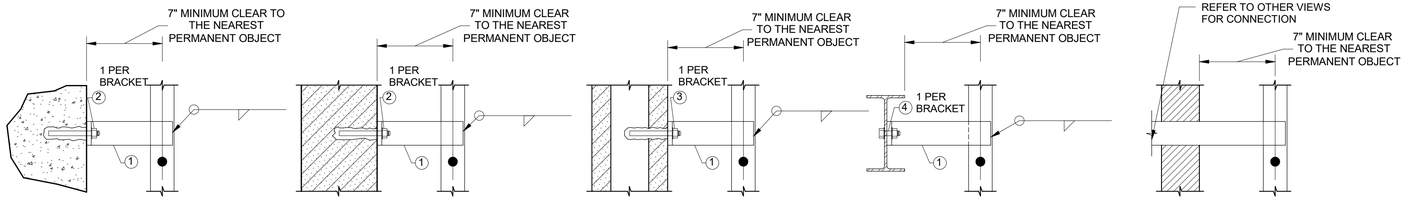

1. LADDER BRACKET BY LADDER SUPPLIER; WITH HOLES FOR CONNECTION TO STRUCTURE. ADJUSTABLE BRACKETS SHALL BE PROVIDED WHERE REQUIRED TO COMPENSATE FOR IRREGULAR OR OFFSET WALL SURFACES.
2. 1/2" MIN STAINLESS STEEL ADHESIVE OR EXPANSION ANCHORS. MINIMUM EMBEDMENT PER THE ANCHOR MANUFACTURER'S ICC-ES REPORT.
3. 1/2" MIN DIAMETER STAINLESS STEEL ADHESIVE ANCHORS WITH SCREEN TUBES. MINIMUM EMBEDMENT PER THE ANCHOR MANUFACTURER'S ICC-ES REPORT.
4. IF LADDER IS PAINTED OR GALVANIZED STEEL, USE 3/4" GALVANIZED STEEL, USE 3/4" MIN GALVANIZED HIGH STRENGTH STEEL BOLTS WITH COMPATIBLE NUT AND WASHERS. IF LADDER IS STAINLESS STEEL OR ALUMINUM, USE 3/4" MIN STAINLESS STEEL BOLTS WITH COMPATIBLE NUTS AND WASHERS.

C TYPICAL LADDER BRACKET CONNECTIONS

1/2" = 1'-0"

NOTES:

1. ALL LADDERS AND FALL PROTECTION SAFETY SYSTEM SHALL BE DESIGNED AND FABRICATED BY THE LADDER SUPPLIER IN CONFORMANCE WITH THE LATEST ISSUE OF OSHA/ANSI A14.3, SECTION 1910.27 APPLICABLE BUILDING CODE STANDARDS FOR FIXED WALL LADDERS, AND THE REQUIREMENTS OF THE CONTRACT DRAWINGS AND SPECIFICATIONS. GENERAL CONFIGURATION AND DETAILS SHALL CONFORM WITH THIS DRAWING.
2. LADDER AND ALL APPURTENANCES TO BE MATERIAL AS NOTED ON DRAWINGS. COORDINATE MATERIALS AND FABRICATION WITH THE SPECIFICATIONS FOR METAL FABRICATIONS AND FIBERGLASS, AS APPLICABLE
   STEEL (PAINTED) - ASTM A36, SHOP PRIME PAINTED.
   STEEL (GALVANIZED) - ASTM A36, ZINC COATED IN ACCORDANCE WITH ASTM A123.
   ALUMINUM - ASTM A6061-T6 ALLOY WITH MILL FINISH UNLESS NOTED OTHERWISE.
   STAINLESS STEEL - ASTM TYPE 316L.
   FIBERGLASS - FIBERGLASS REINFORCED PULTRUDED TUBE, UV PROTECTED.
3. LADDER RUNGS TO BE MIN 1" DIAMETER BARS OR PREFABRICATED FLAT TOP LADDER TREADS WITH MINIMUM 1" WIDE SLIP RESISTANT SURFACES. SPACE RUNGS AT 12". LADDER SIDE RAILS SHALL BE FLAT STOCK.
4. FURNISH LADDERS IN CONFIGURATIONS REQUIRED TO FIT THE LOCATIONS INDICATED ON THE DESIGN DRAWINGS. CONTRACTOR SHALL VERIFY FINAL DIMENSIONS BEFORE FABRICATION.
5. LADDER SHOP DRAWINGS SHALL BE SEALED BY A PROFESSIONAL ENGINEER REGISTERED IN THE STATE OF THE PROJECT. IF REQUESTED, CALCULATIONS OR TEST REPORTS VERIFYING THE LADDERS COMPLIANCE WITH APPLICABLE STANDARDS SHALL BE SUBMITTED, AND SHALL BE SEALED BY A PROFESSIONAL ENGINEER REGISTERED IN THE STATE OF THE PROJECT.
6. IF A LADDER CONFIGURATION INDICATED ON THE DRAWINGS REQUIRES THAT THE LADDER SPAN A GREATER DISTANCE BETWEEN SUPPORTS THAN INDICATED ON THE TYPICAL DETAILS, THE LADDER SUPPLIER SHALL DESIGN THE LADDER, THE LADDER BRACKET, AND THE LADDER BRACKET CONNECTIONS FOR THE INDICATED SPAN IN ACCORDANCE WITH NOTE 1 ABOVE. THE BRACKET CONNECTIONS SHALL BE AT LEAST EQUAL TO THE TYPICAL CONNECTIONS INDICATED.
7. IF INTERRUPTION OF GUARDRAIL IS REQUIRED, SEE SELF-CLOSING SWING GATE DETAIL ON STANDARD GUARDRAIL DRAWING. SELF-CLOSING GATES SHALL BE UTILIZED AT ALL LADDER ENTRANCES EXCEPT LANDING (REST) PLATFORMS FOR CONTINUOUS LADDER CLIMBS.
8. A FALL PROTECTION SAFETY SYSTEM SHALL BE PROVIDED ON LADDERS AS INDICIATED IN THE DRAWINGS AND WHERE THE LENGTH OF CLIMBING IS MORE THAN 24 FEET OR WHERE THE LENGTH OF CLIMB IS LESS THAN 24 FEET, BUT THE TOP OF THE LADDER IS MORE THAN 24 FEET ABOVE GROUND LEVEL, FLOOR OR ROOF. THE LADDER FALL PROTECTION SAFETY SYSTEM SHALL BE OSHA APPROVED. LADDER AND ANCHORAGES SHALL BE DESIGNED TO SUPPORT OSHA REQUIRED FALL PROTECTION LOADS AND ANY LOADS INDICATED IN THE FALL PROTECTION SAFETY SYSTEM'S PRODUCT LITERATURE.
9. WHERE A FALL PROTECTION SAFETY SYSTEM IS REQUIRED AND THE LADDER TERMINATES BELOW AN ACCESS HATCH, THE FALL PROTECTION SAFETY SYSTEM SHALL INCORPORATE A TELESCOPING ANCHOR EXTENSION WHICH IS INTEGRAL WITH THE SAFETY SYSTEM. THE TELESCOPING ANCHOR EXTENSION SHALL REPLACE THE REQUIREMENT FOR THE EXTENDING LADDER SAFETY POST.
10. REST PLATFORMS OR SIDE STEP PLATFORMS SHALL BE FURNISHED TO LIMIT THE STRAIGHT CLIMB LENGTH TO 30 FEET. SEE STD DETAIL SHEET S - XXX FOR DETAILS. REST AND/OR SIDE STEP PLATFORMS SHALL BE DESIGNED BY LADDER MANUFACTURER. SHOP DRAWINGS SHALL BE SEALED BY A PROFESSIONAL ENGINEER REGISTERED IN THE STATE OF THE PROJECT.

12" 0' 1' 2' 3' 4' 5' 6' 7'

3/8" = 1'-0"

12' 6' 0' 1' 2' 3' 4' 5'

1/2" = 1'-0"

(SCALE BAR IS 4" AT FULL SCALE) 0 1/2 1 2 3 4

BLACK & VEATCH
Black & Veatch Corporation
Kansas City, Missouri

olsson

THIS DOCUMENT WAS ORIGINALLY ISSUED AND SEALED ON JANUARY 24, 2023 BY DOUGLAS L. DUNCAN, A LICENSED PROFESSIONAL ENGINEER IN THE STATE OF ARKANSAS, E-18748

BEAVER WATER DISTRICT

WESTERN CORRIDOR PUMP STATION

100% SET

REVISIONS AND RECORD OF ISSUE

DESIGNED:	KB/DLD
DETAILED:	PP
CHECKED:	BSB
APPROVED:	DLD
DATE:	JANUARY 24, 2023
PROJECT NO.:	405654

PUMP STATION

STRUCTURAL

STANDARD LADDER DETAILS

S-99-505

OF 159

PLOTTED: 1/20/2023 10:55:41 AM
FILE: BIM 360://405654 - BWD Western Corridor Pump Station/405654-42-PUMP STATION.rvt
D11000

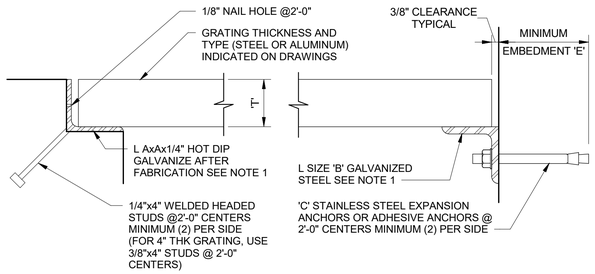

GRATING THICKNESS 'T'	L SIZE AxAx1/4 INCHES	L SIZE 'B' INCHES	'C' ANCHOR DIA	'C' ANCHOR MIN 'E'
1"	1 3/4 x 1 3/4*	2 1/2x2 1/2x1/4	1/2"	3 1/4"
1 1/4"	1 3/4 x 1 3/4*	2 1/2x2 1/2x1/4	1/2"	3 1/4"
1 1/2"	1 3/4 x 1 3/4	2 1/2x2 1/2x1/4	1/2"	3 1/4"
1 3/4"	2x2	3x3x3/8	3/4"	4 3/4"
2"	2 1/2x2 1/2*	3x3x3/8	3/4"	4 3/4"
2 1/4"	2 1/2x2 1/2	3x3x3/8	3/4"	4 3/4"
2 1/2"	3x3*	3x3x3/8	3/4"	4 3/4"
3"	3 1/2x3 1/2*	3 1/2x3 1/2x3/8*	3/4"	6"
4"	4 1/2x4 1/2*	4 1/2x4 1/2x3/8*	3/4"	6"

* TRIM AND BEVEL UPSTANDING LEG TO FIT

NOTE:

1. ALL GRATING SUPPORTED ON CONCRETE SHALL HAVE AN EMBEDDED ANGLE RECESSED AS SHOWN UNLESS NOTED OTHERWISE. GRATING SUPPORTED BY THE FACE MOUNTED ANGLE SHALL BE USED WHERE THE CONCRETE EXTENDS ABOVE THE TOP OF THE GRATING OR AT EXISTING STRUCTURES.

A GRATING/FLOOR PLATE SUPPORT
3" = 1'-0"

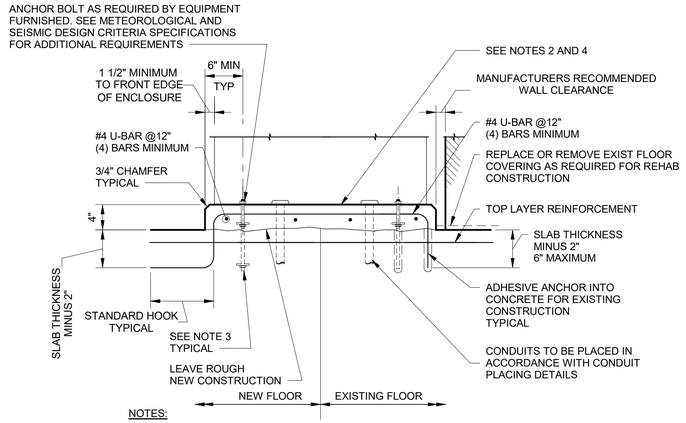

NOTES:

1. UNLESS OTHERWISE NOTED, ALL INDOOR FLOOR MOUNTED EQUIPMENTS SHALL BE PROVIDED WITH EQUIPMENT BASES.
2. EQUIPMENT BASE HEIGHT MAY BE INCREASED, WITH THE APPROVAL OF THE ENGINEER, AS NECESSARY TO FACILITATE ANCHORAGE REQUIREMENTS.
3. WHERE THE DESIGN ANCHOR BOLT EMBEDMENT IS GREATER THAN THE CONCRETE EQUIPMENT BASE THICKNESS, THEN THE REQUIRED DEPTH OF EMBEDMENT SHALL BE MEASURED FROM THE TOP OF STRUCTURAL SLAB AND NOT THE TOP OF THE EQUIPMENT BASE.
4. EQUIPMENT BASE SHALL USE STRUCTURAL CONCRETE AS INDICATED IN THE CAST-IN-PLACE CONCRETE SPECIFICATION.
5. ANCHOR BOLTS AND REINFORCING WILL BE INSPECTED IN ACCORDANCE WITH THE CODE REQUIRED SPECIAL INSPECTIONS AND PROCEDURES SPECIFICATION.

B EQUIPMENT BASE
1" = 1'-0"

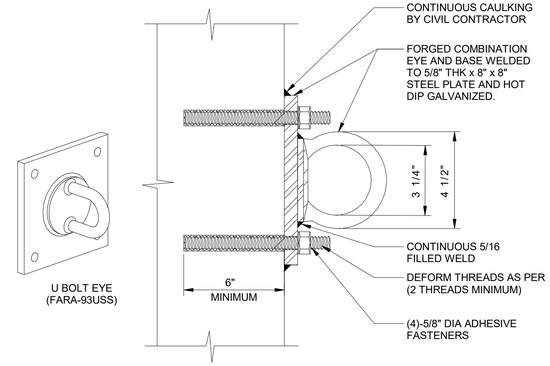

C FALL ARREST TIE-OFF
1 : 20

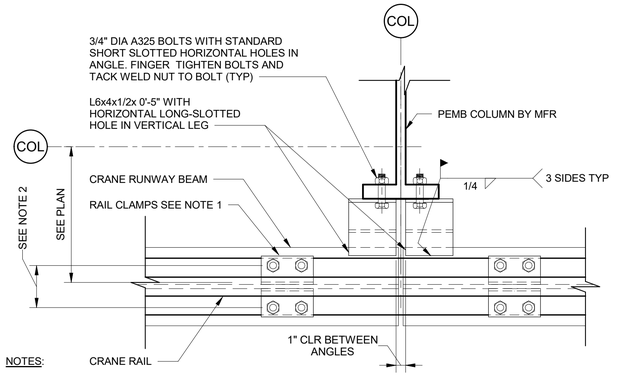

RUNWAY BEAM TOP PLAN

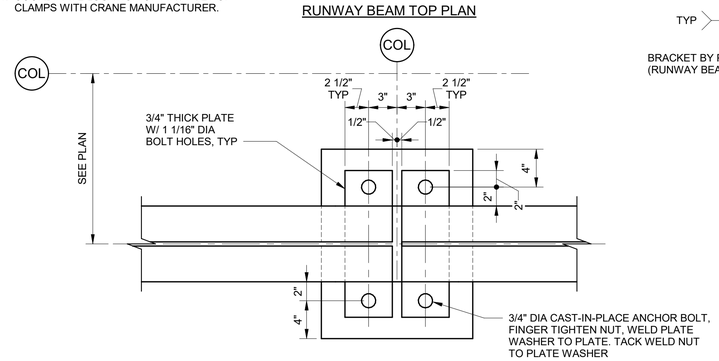

RUNWAY BEAM SECTIONAL PLAN

D BRIDGE CRANE RUNWAY BEAM SUPPORT
1 1/2" = 1'-0"

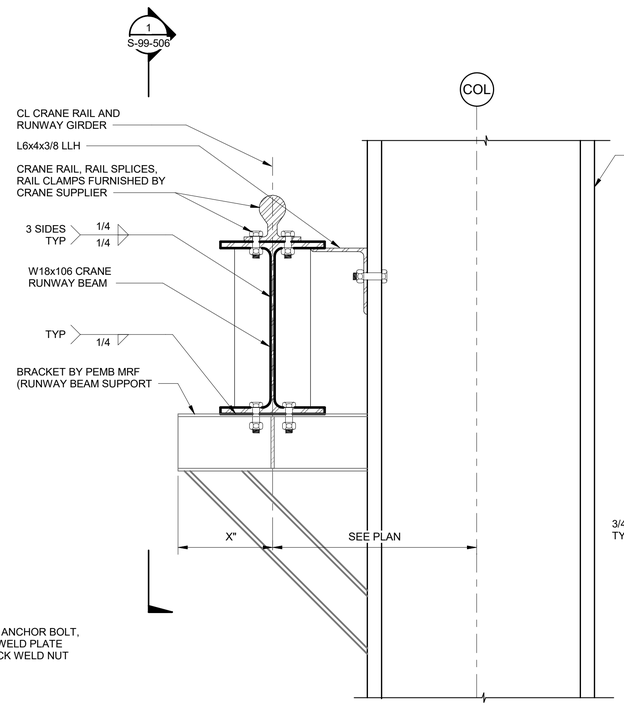

E SECTION
1 1/2" = 1'-0"

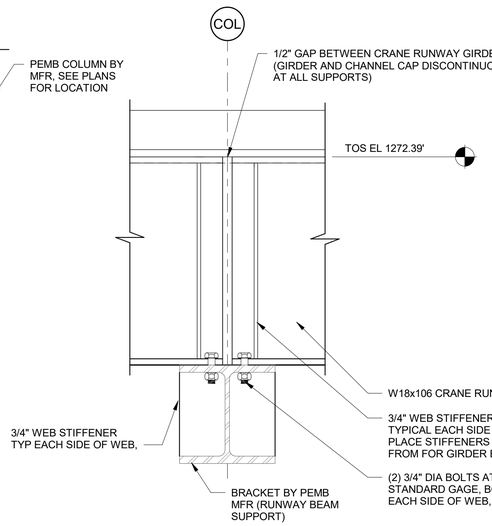

1 SECTION
S-99-506 1 1/2" = 1'-0"

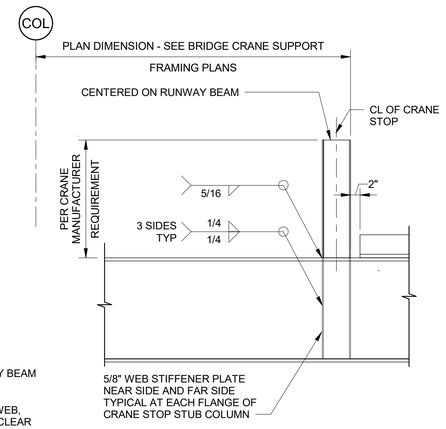

F CRANE STOP DETAIL
3/4" = 1'-0"

12" 9" 6" 3" 0" 1'
1 1/2" = 1'-0"

12" 9" 6" 3" 0"
3" = 1'-0"

(SCALE BAR IS 4" AT FULL SCALE) 0 1/2 1 2 3 4

BLACK & VEATCH
Black & Veatch Corporation
Kansas City, Missouri

olsson

THIS DOCUMENT WAS ORIGINALLY ISSUED AND SEALED ON JANUARY 24, 2023 BY DOUGLAS L. DUNCAN, A LICENSED PROFESSIONAL ENGINEER IN THE STATE OF ARKANSAS, E-18748

BEAVER WATER DISTRICT

WESTERN CORRIDOR PUMP STATION

100% SET

REVISIONS AND RECORD OF ISSUE

DESIGNED:	KB/DLD
DETAILED:	PP
CHECKED:	BSB
APPROVED:	DLD
DATE:	JANUARY 24, 2023
PROJECT NO.:	405654

PUMP STATION

STRUCTURAL

MISCELLANEOUS DETAILS

S-99-506

OF 159

PLOTTED: 1/20/2023 10:56:43 AM
FILE: BIM 360://405654 - BWD Western Corridor Pump Station/405654-42-PUMP STATION.rvt
D11000

STEEL DECKING SCHEDULE

BUILDING	LOCATION	DECKING					SUPPORT FASTENERS			SIDELAP FASTENERS			EDGE ZONE WIDTH	PERIMETER ATTACHMENTS PARALLEL TO SIDELAP FASTENERS
		DEPTH	TYPE NOTE 1	GAUGE	SHOP COATING NOTE 2	MIN SPANS NOTE 3	TYPE NOTE 4	FIELD PATTERN	PERIMETER PATTERN	TYPE NOTE 4	FIELD SPACING	PERIMETER SPACING		
PUMP STATION (ELECTRICAL/CONTROL ROOM)	ROOF	1 1/2"	B	18	G60	3	HILTI X-ENP19	36/4	36/4	HILTI S-SLC 01	18"	12"	3 FT	HILTI S-SLC 01
ELECTRICAL BUILDING	ROOF	1 1/2"	B	22	G60	3	HILTI X-ENP19	36/4	36/4	HILTI S-SLC 01	24"	12"	6 FT	HILTI S-SLC 01

NOTES:

1. DECKING TYPE THAT INCLUDES "A" SHALL BE ACOUSTICAL DECKING.
2. "G60" AND "G90" INDICATE GALVANIZING THICKNESS, "PRIME" INDICATES PRIME PAINTING. SEE STEEL DECKING SPECIFICATION.
3. DECKING SHEETS SHALL BE CUT TO COVER AT LEAST THE NUMBER OF SPANS INDICATED.
4. "SCREWS", "POWER-ACTUATED", AND "PUNCHED" SHALL BE AS DESCRIBED IN THE STEEL DECKING SPECIFICATION.

STEEL DECKING SCHEDULE
NO SCALE

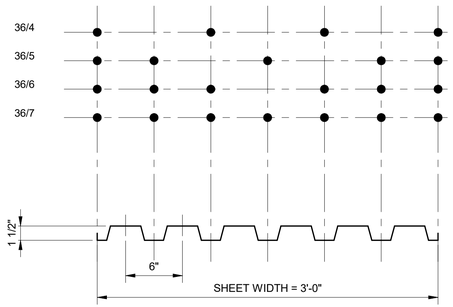

A METAL DECK ATTACHMENT DETAIL
1 1/2" = 1'-0"

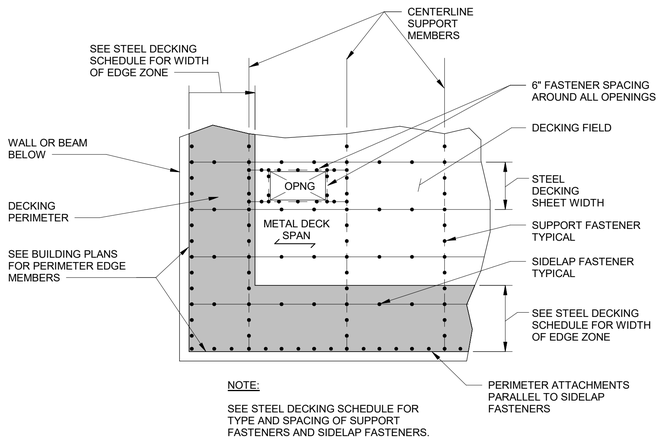

NOTE:

SEE STEEL DECKING SCHEDULE FOR TYPE AND SPACING OF SUPPORT FASTENERS AND SIDELAP FASTENERS.

B STEEL DECKING FASTENER DETAIL
1/2" = 1'-0"

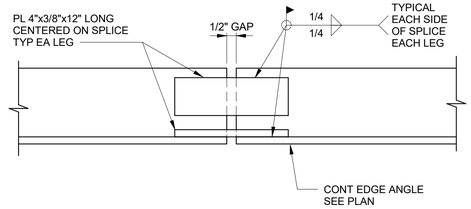

C EDGE ANGLE SPLICE DETAIL
NO SCALE

EMBED PLATE SCHEDULE

TYPE	CMU WALL THICKNESS	PLATE DETAIL	MAXIMUM PLATE SPACING PUMP STATION (ELECTRICAL/CONTROL ROOM)
1	12"	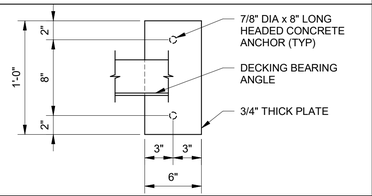	3'-0"
2	12"	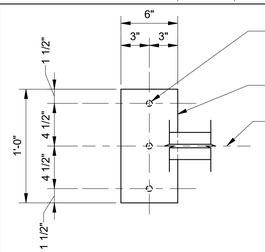	SEE ROOF PLANS

SEE SPECIFICATIONS FOR MATERIAL REQUIREMENTS OF BEARING PLATES AND HEADED CONCRETE ANCHORS.

D EMBED PLATE SCHEDULE
NO SCALE

12' 6' 0' 1' 2' 3' 4' 5'
1/2" = 1'-0"

12" 9" 6" 3" 0" 1'
1 1/2" = 1'-0"

(SCALE BAR IS 4" AT FULL SCALE) 0 1/2 1 2 3 4

BLACK & VEATCH
Black & Veatch Corporation
Kansas City, Missouri

olsson

THIS DOCUMENT WAS ORIGINALLY ISSUED AND SEALED ON JANUARY 24, 2023 BY DOUGLAS L. DUNCAN, A LICENSED PROFESSIONAL ENGINEER IN THE STATE OF ARKANSAS, E-18748

BEAVER WATER DISTRICT

WESTERN CORRIDOR PUMP STATION

100% SET

REVISIONS AND RECORD OF ISSUE

DESIGNED:	KB/DLD
DETAILED:	PP
CHECKED:	BSB
APPROVED:	DLD
DATE:	JANUARY 24, 2023
PROJECT NO.:	405654

PUMP STATION

STRUCTURAL

STEEL DECKING SCHEDULE AND DETAILS

S-99-507

OF 159

PLOTTED: 1/20/2023 10:55:44 AM
FILE: BIM 360://405654 - BWD Western Corridor Pump Station/405654-42-PUMP STATION.rvt
D11000

PIPE, EQUIPMENT & VALVE TAG LEGEND

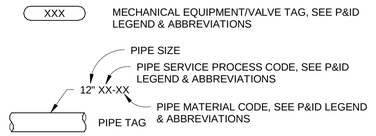

PIPE & FITTINGS SYMBOL LEGEND

DOUBLE LINE

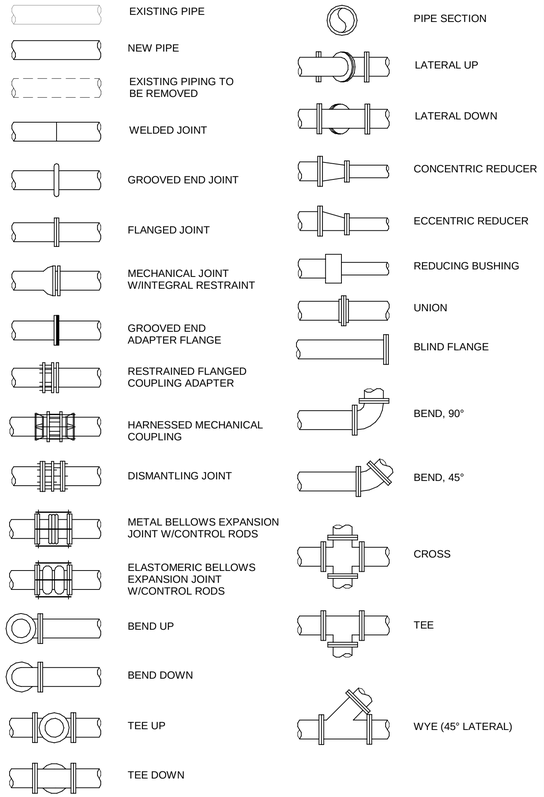

SINGLE LINE

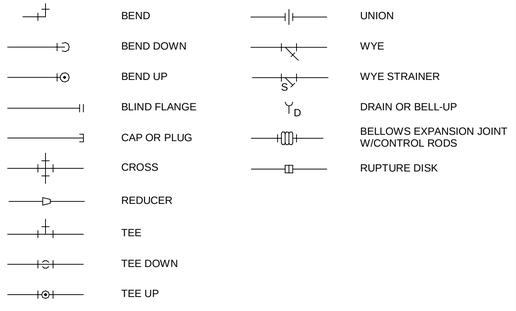

VALVE SYMBOL LEGEND

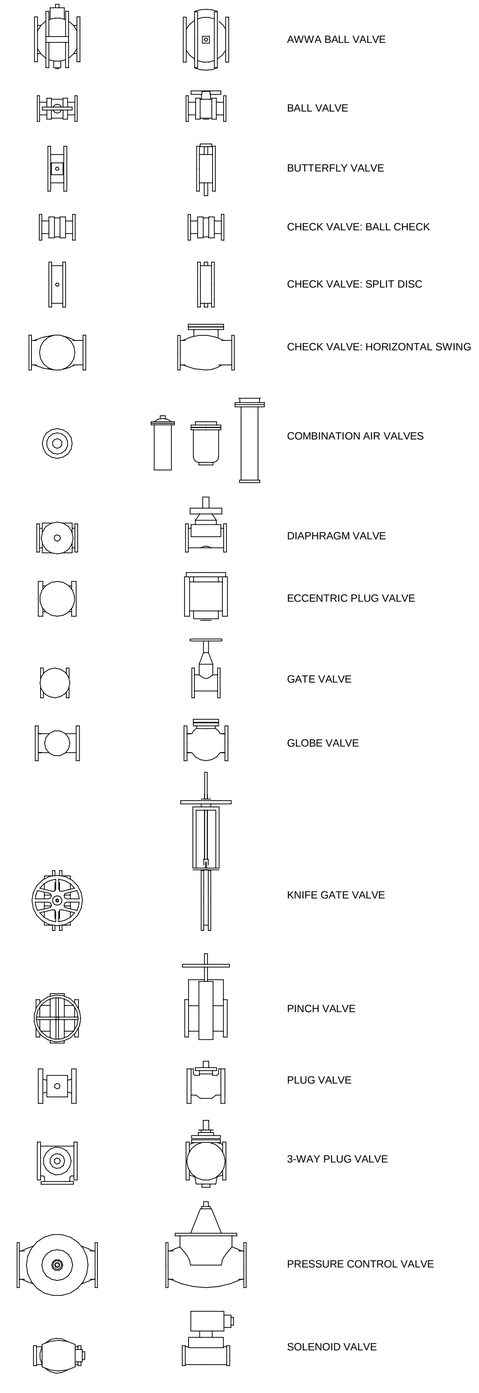

GENERAL PROCESS MECHANCAL NOTES

1. LEGENDS SHOWN IN THIS DRAWING ARE BASED ON A TEMPLATE THAT IS NOT PROJECT SPECIFIC. SOME LEGEND SYMBOLS ARE NOT USED ON THIS PROJECT, BUT ARE SHOWN TO PROVIDE A DICTIONARY FOR SYMBOLS THAT MAY ALSO BE USED DURING THE PROJECT CONSTRUCTION PHASE.
2. FOR PROCESS MECHANICAL ABBREVIATIONS, REFER TO GENERAL ABBREVIATIONS.
3. REFER TO THE P&ID LEGEND AND ABBREVIATIONS FOR SINGLE-LINE VALVE, GATE, ACTUATOR, FITTING, EQUIPMENT, AND OTHER SYMBOLS.
4. FITTING TYPES IN THE LEGEND ON THIS SHEET SHOW FLANGED END CONNECTIONS. FITTINGS FOR OTHER END CONNECTION TYPES ARE SIMILAR.
5. VALVE TYPES IN THE LEGEND ON THIS SHEET REPRESENT THE TYPICAL APPEARANCE FOR EACH TYPE OF VALVE. THE ACTUAL VALVES USED FOR THIS PROJECT MAY VARY IN APPEARANCE.
6. LAY PIPE TO UNIFORM GRADE BETWEEN INDICATED ELEVATION POINTS.
7. SIZE OF FITTINGS SHOWN ON DRAWINGS SHALL MATCH CONNECTING PIPING, UNLESS OTHERWISE INDICATED. TYPE OF JOINT AND FITTING MATERIAL SHALL BE THE SAME AS CONNECTING PIPING.
8. ALL REQUIRED HANGERS, SUPPORTS, BRACES, INSERTS, AND ACCESSORIES ARE NOT SHOWN ON THE DRAWINGS. PIPE SUPPORTS FOR 12-INCH DIAMETER AND SMALLER PIPES SHALL BE DESIGNED AND FURNISHED BY THE CONTRACTOR AS SPECIFIED.
9. ALL PRESSURIZED OR SURCHARGED PIPELINES, PIPE FITTINGS, COUPLINGS, JOINTS, EXPANSION JOINTS, TANK CONNECTIONS, AND CHANNEL CONNECTIONS SHALL BE PROVIDED WITH THRUST RESTRAINT BASED ON SPECIFIED PRESSURES AND TEMPERATURES.
10. NUMBER AND LOCATION OF UNIONS AND COUPLINGS SHOWN ON DRAWINGS IS ONLY APPROXIMATE. CONTRACTOR SHALL PROVIDE ALL UNIONS AND COUPLINGS REQUIRED BY THE SPECIFICATIONS AND AS NECESSARY TO FACILITATE CONVENIENT REMOVAL OF VALVES AND MECHANICAL EQUIPMENT.
11. WHERE A GROOVED END JOINT IS SHOWN,IT SHALL BE THE RIGID JOINT TYPE,UNLESS OTHERWISE SPECIFIED. WHERE A FLANGED COUPLING ADAPTER IS SHOWN, A STANDARD FLANGE SHALL BE JOINED TO THE COUPLING ADAPTER.
12. CONTRACTOR SHALL ORIENT VALVES AS SPECIFIED.

BLACK & VEATCH

Black & Veatch Corporation
Kansas City, Missouri

olsson

THIS DOCUMENT WAS ORIGINALLY ISSUED AND SEALED ON JANUARY 24, 2023 BY ANDREW J. HANSEN, A LICENSED PROFESSIONAL ENGINEER IN THE STATE OF ARKANSAS, E-14664

BEAVER WATER DISTRICT

WESTERN CORRIDOR PUMP STATION

100% SET

REVISIONS AND RECORD OF ISSUE	
DESIGNED:	CJK
DETAILED:	BCS
CHECKED:	TAM
APPROVED:	AJH
DATE:	JANUARY 24, 2023
PROJECT NO.:	405654

PUMP STATION

PROCESS MECHANICAL

LEGENDS AND GENERAL NOTES

M-00-001

71 OF 159

(SCALE BAR IS 4" AT FULL SCALE) 0 1/2 1 2 3 4

PLOTTED: 1/20/2023 7:32:27 AM
FILE: BIM 360://405654 - BWD Western Corridor Pump Station/405654-42-PUMP STATION.rvt
D11000

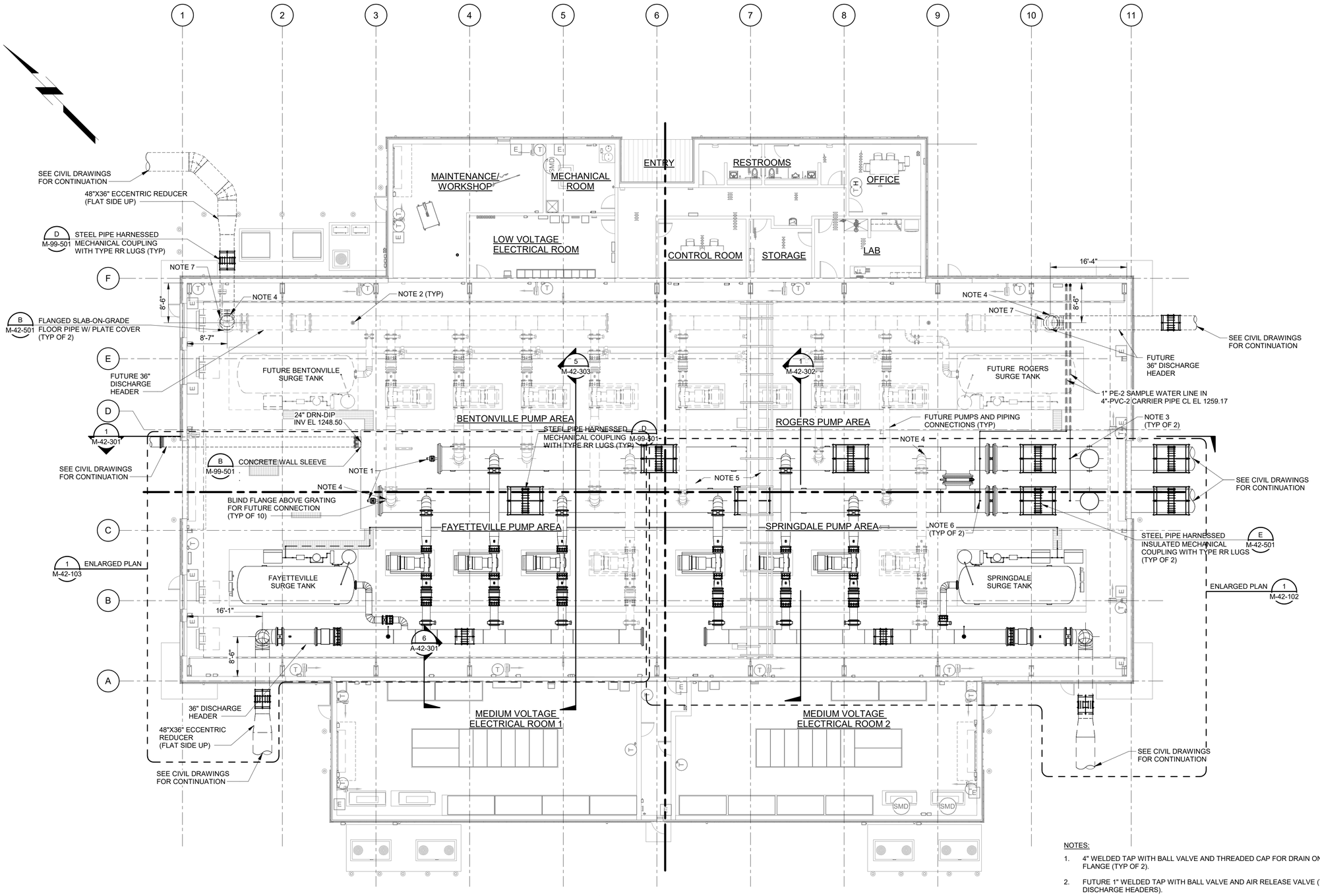

OVERALL PLAN

3/32" = 1'-0"

NOTES:

1. 4" WELDED TAP WITH BALL VALVE AND THREADED CAP FOR DRAIN ON BOTTOM OF BLIND FLANGE (TYP OF 2).
2. FUTURE 1" WELDED TAP WITH BALL VALVE AND AIR RELEASE VALVE (TYP ALL FUTURE DISCHARGE HEADERS).
3. PROVIDE 1" TAP AND BALL VALVE FOR SAMPLE WATER LINE TO WATER QUALITY PANEL.
4. CONTRACTOR SHALL PROVIDE TEMPORARY PIPING BETWEEN THE SUCTION HEADER AND DISCHARGE HEADERS FOR BENTONVILLE, AND ROGERS PIPING FOR FLUSHING AND DISINFECTION WORK.
5. GRATING AND SUPPORTS NOT SHOWN SEE STRUCTURAL SHEETS FOR DETAILS.
6. PROVIDE 1" WELDED TAP WITH BALL VALVE FOR WATER LINE TO PRESSURE TRANSMITTER.
7. 36" PLATE COVER FOR FUTURE ROGERS AND BENTONVILLE FW TO PLATE COVER FLUSH WITH FLOOR
8. INSTALL 3 EACH 6'-0" RUBBER PARKING BLOCKS TO PREVENT VEHICLES FROM DRIVING ONTO GRATING. PARKING BLOCKS SHALL BE CLEARLINE RUBBER PARKING BLOCKS OR EQUAL.

(SCALE BAR IS 4" AT FULL SCALE) 0 1/2 1 2 3 4

BLACK & VEATCH
Black & Veatch Corporation
Kansas City, Missouri

olsson

THIS DOCUMENT WAS ORIGINALLY ISSUED AND SEALED ON JANUARY 24, 2023 BY ANDREW J. HANSEN, A LICENSED PROFESSIONAL ENGINEER IN THE STATE OF ARKANSAS, E-14664

BEAVER WATER DISTRICT

WESTERN CORRIDOR PUMP STATION

100% SET

REVISIONS AND RECORD OF ISSUE

DESIGNED:	CJK
DETAILED:	BCS
CHECKED:	TAM
APPROVED:	AJH
DATE:	JANUARY 24, 2023
PROJECT NO.:	405654

PUMP STATION

PROCESS MECHANICAL

PUMP STATION - OVERALL PLAN

M-42-101

PLOTTED: 1/23/2023 1:43:05 PM
FILE: BIM 360://405654 - BWD Western Corridor Pump Station/405654-42-PUMP STATION.rvt
D11000

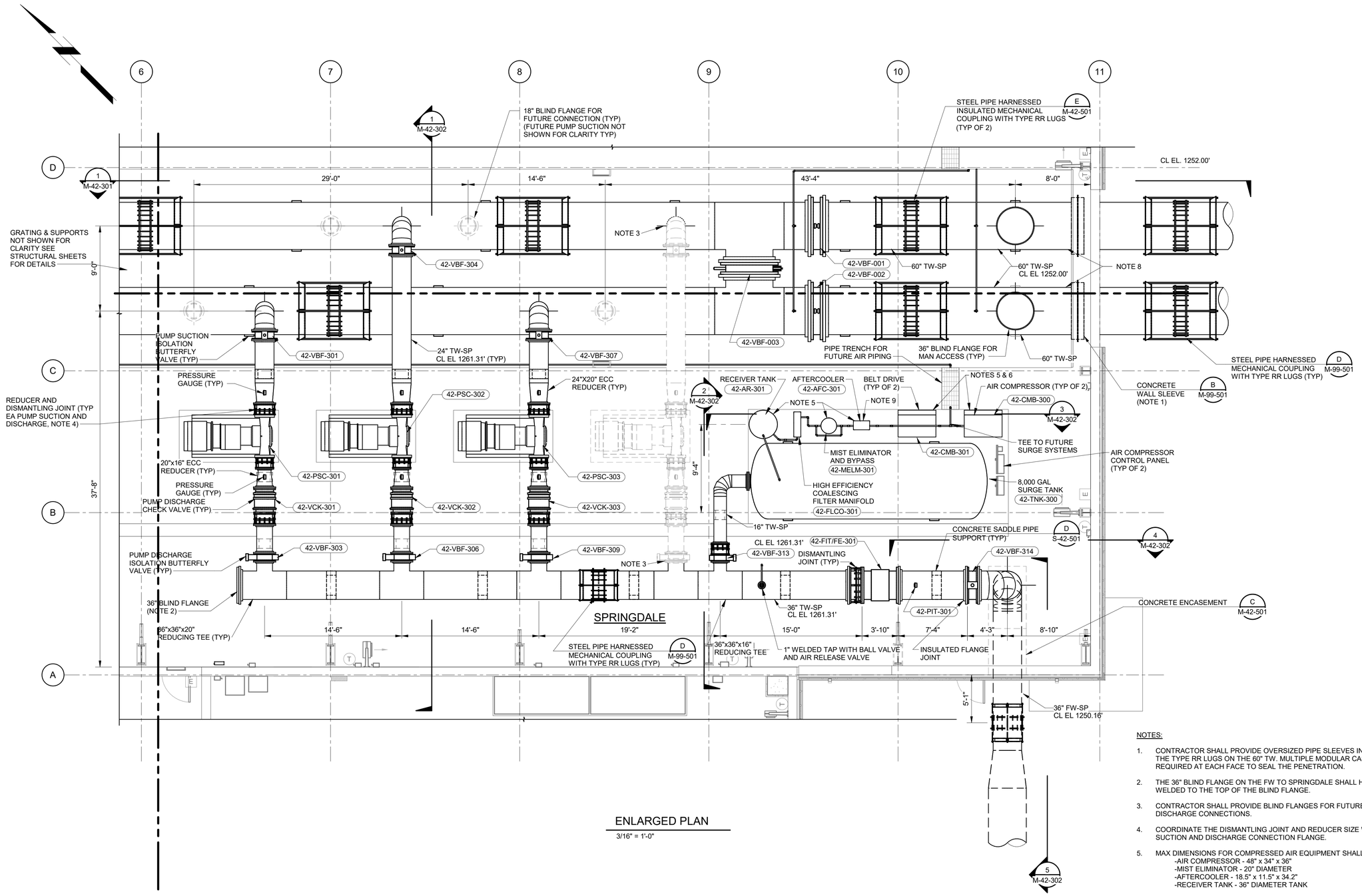

ENLARGED PLAN

3/16" = 1'-0"

NOTES:

1. CONTRACTOR SHALL PROVIDE OVERSIZED PIPE SLEEVES IN THE WALL TO PASS THE TYPE RR LUGS ON THE 60" TW. MULTIPLE MODULAR CASINGS SEALS ARE REQUIRED AT EACH FACE TO SEAL THE PENETRATION.
2. THE 36" BLIND FLANGE ON THE FW TO SPRINGDALE SHALL HAVE A LIFTING LUG WELDED TO THE TOP OF THE BLIND FLANGE.
3. CONTRACTOR SHALL PROVIDE BLIND FLANGES FOR FUTURE PUMP SUCTION AND DISCHARGE CONNECTIONS.
4. COORDINATE THE DISMANTLING JOINT AND REDUCER SIZE WITH THE PUMP SUCTION AND DISCHARGE CONNECTION FLANGE.
5. MAX DIMENSIONS FOR COMPRESSED AIR EQUIPMENT SHALL BE AS FOLLOWS:
   -AIR COMPRESSOR - 48" x 34" x 36"
   -MIST ELIMINATOR - 20" DIAMETER
   -AFTERCOOLER - 18.5" x 11.5" x 34.2"
   -RECEIVER TANK - 36" DIAMETER TANK
6. THERE SHALL BE A 3 FOOT CLEARANCE REQUIREMENT AROUND THREE SIDES OF THE AIR COMPRESSORS WITH THE EXCEPTION OF THE BACK, LONG SIDE.
7. THERE SHALL BE A 3.5 FOOT CLEARANCE REQUIREMENT IN FRONT OF THE AIR COMPRESSOR CONTROL PANEL.
8. PROVIDE ELECTRICAL BONDING STRAP BETWEEN THE TWO 60" TW TRANSMISSION MAINS. ADD WELD STRAP CONNECTION TO THE STEEL PIPE AND REPAIR COATING SYSTEM.
9. THERE SHALL BE A 3 FOOT CLEARANCE REQUIREMENT IN FRONT OF THE AIR DISCHARGE SIDE OF THE AFTERCOOLER.

(SCALE BAR IS 4" AT FULL SCALE) 0 1/2 1 2 3 4

BLACK & VEATCH

Black & Veatch Corporation
Kansas City, Missouri

olsson

THIS DOCUMENT WAS ORIGINALLY ISSUED AND SEALED ON JANUARY 24, 2023 BY ANDREW J. HANSEN, A LICENSED PROFESSIONAL ENGINEER IN THE STATE OF ARKANSAS, E-14664

BEAVER WATER DISTRICT

WESTERN CORRIDOR PUMP STATION

100% SET

REVISIONS AND RECORD OF ISSUE

DESIGNED:	CJK
DETAILED:	BCS
CHECKED:	TAM
APPROVED:	AJH
DATE:	JANUARY 24, 2023
PROJECT NO.:	405654

PUMP STATION

PROCESS MECHANICAL

PUMP STATION - OPERATING FLOOR PLAN - ENLARGED PUMP ROOM

M-42-102

73 OF 159

PLOTTED: 1/23/2023 1:43:07 PM
FILE: BIM 360://405654 - BWD Western Corridor Pump Station/405654-42-PUMP STATION.rvt
D11000

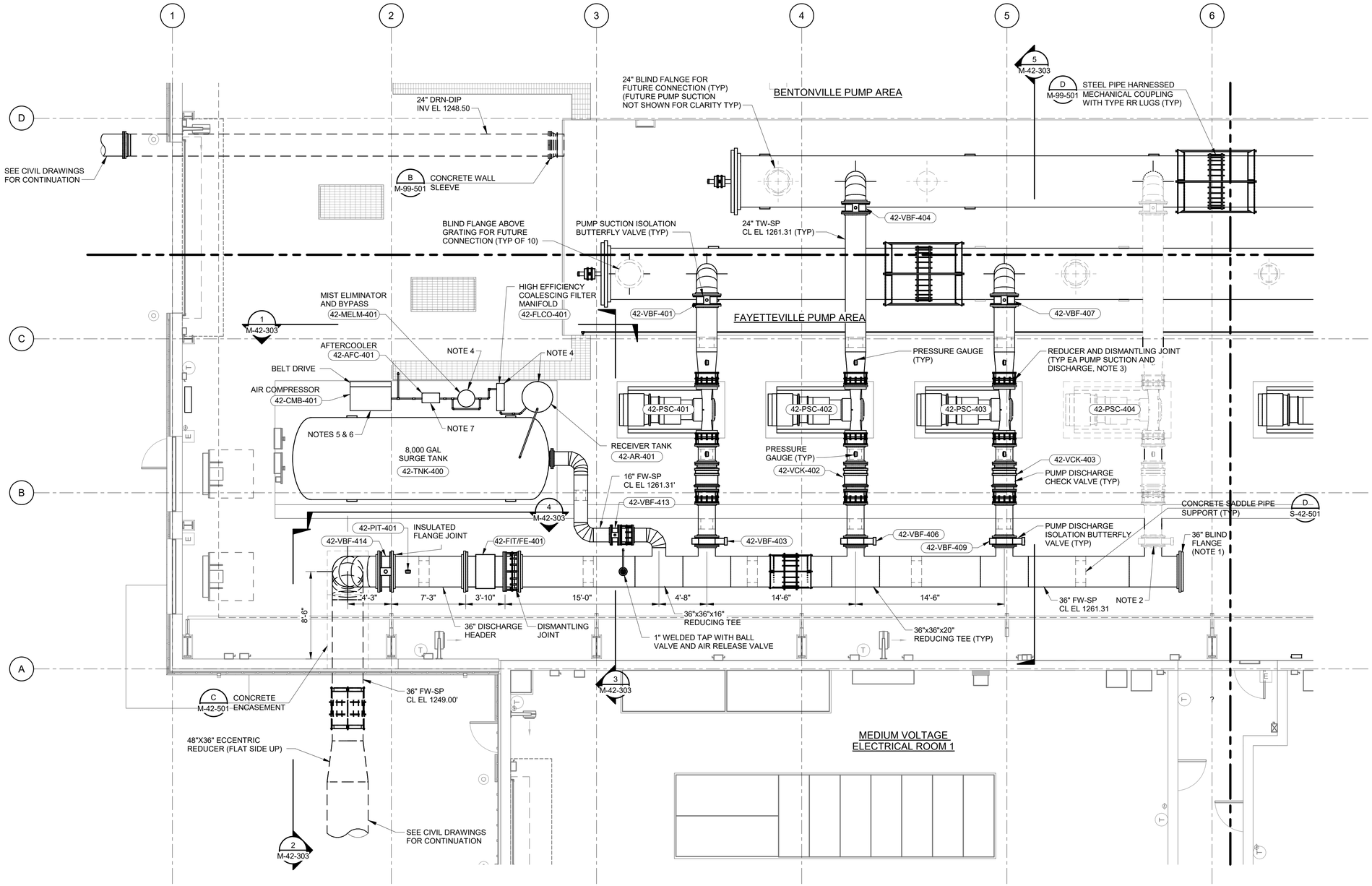

ENLARGED PLAN

3/16" = 1'-0"

NOTES:

1. THE 36" BLIND FLANGE ON THE FW TO FAYETTEVILLE SHALL HAVE A LIFTING LUG WELDED TO THE TOP OF THE BLIND FLANGE.
2. CONTRACTOR SHALL PROVIDE BLIND FLANGES FOR FUTURE PUMP SUCTION AND DISCHARGE CONNECTIONS.
3. COORDINATE THE DISMANTLING JOINT AND REDUCER SIZE WITH THE PUMP SUCTION AND DISCHARGE CONNECTION FLANGE.
4. MAX DIMENSIONS FOR COMPRESSED AIR EQUIPMENT SHALL BE AS FOLLOWS:
   -AIR COMPRESSOR - 48" x 34" x 36"
   -MIST ELIMINATOR - 20" DIAMETER
   -AFTERCOOLER - 18.5" x 11.5" x 34.2"
   -RECEIVER TANK - 36" DIAMETER TANK
5. THERE SHALL BE A 3 FOOT CLEARANCE REQUIREMENT AROUND THREE SIDES OF THE AIR COMPRESSORS WITH THE EXCEPTION OF THE BACK, LONG SIDE.
6. THERE SHALL BE A 3.5 FOOT CLEARANCE REQUIREMENT IN FRONT OF THE AIR COMPRESSOR CONTROL PANEL.
7. THERE SHALL BE A 3 FOOT CLEARANCE REQUIREMENT IN FRONT OF THE AIR DISCHARGE SIDE OF THE AFTERCOOLER.

(SCALE BAR IS 4" AT FULL SCALE) 0 1/2 1 2 3 4

BLACK & VEATCH
Black & Veatch Corporation
Kansas City, Missouri

olsson

THIS DOCUMENT WAS ORIGINALLY ISSUED AND SEALED ON JANUARY 24, 2023 BY ANDREW J. HANSEN, A LICENSED PROFESSIONAL ENGINEER IN THE STATE OF ARKANSAS, E-14664

BEAVER WATER DISTRICT

WESTERN CORRIDOR PUMP STATION

100% SET

REVISIONS AND RECORD OF ISSUE

DESIGNED:	CJK
DETAILED:	BCS
CHECKED:	TAM
APPROVED:	AJH
DATE:	JANUARY 24, 2023
PROJECT NO.:	405654

PUMP STATION

PROCESS MECHANICAL

PUMP STATION - OPERATING FLOOR PLAN - ENLARGED PLAN

M-42-103

PLOTTED: 1/23/2023 1:43:08 PM
FILE: BIM 360://405654 - BWD Western Corridor Pump Station/405654-42-PUMP STATION.rvt
D1:1000

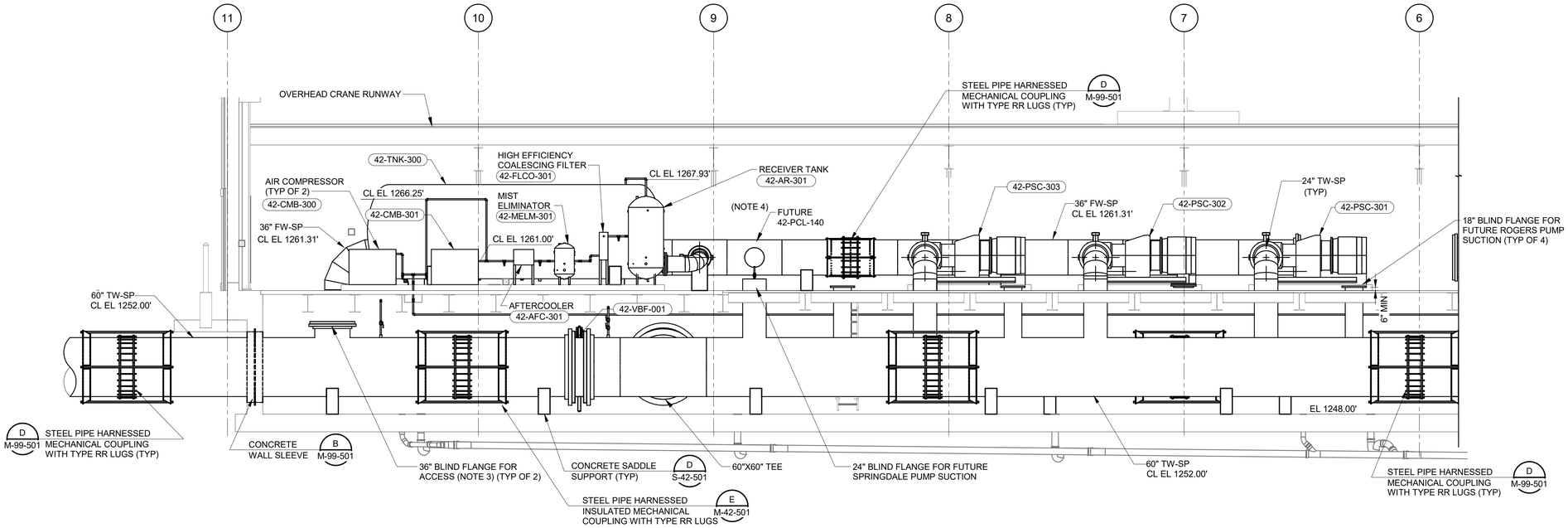

1 M-42-101 SECTION 3/16" = 1'-0"

NOTES:

1. PROVIDE MODULAR CASING SEAL EACH FACE.
2. THE 60" BLIND FLANGES SHALL BE PROVIDED WITH A LIFTING LUG WELDED TO THE TOP OF THE BLIND FLANGE.
3. THE 36" BLIND FLANGES SHALL BE PROVIDED WITH A LIFTING LUG WELDED TO THE MIDDLE OF THE BLIND FLANGE.
4. CONTRACTOR TO COORDINATE ELEVATION OF 16" PIPE TO SURGE TANK WITH SURGE TANK CONNECTION ELEVATION.

(SCALE BAR IS 4" AT FULL SCALE) 0 1/2 1 2 3 4

PLOTTED: 1/23/2023 1:43:10 PM
FILE: BIM 360://405654 - BWD Western Corridor Pump Station/405654-42-PUMP STATION.rvt
D1000

BLACK & VEATCH
Black & Veatch Corporation
Kansas City, Missouri

olsson

THIS DOCUMENT WAS ORIGINALLY ISSUED AND SEALED ON JANUARY 24, 2023 BY ANDREW J. HANSEN, A LICENSED PROFESSIONAL ENGINEER IN THE STATE OF ARKANSAS, E-14664

BEAVER WATER DISTRICT

WESTERN CORRIDOR PUMP STATION

100% SET

REVISIONS AND RECORD OF ISSUE

DESIGNED:	CJK
DETAILED:	BCS
CHECKED:	TAM
APPROVED:	AJH
DATE:	JANUARY 24, 2023
PROJECT NO.:	405654

PUMP STATION

PROCESS MECHANICAL

SECTIONS

M-42-301

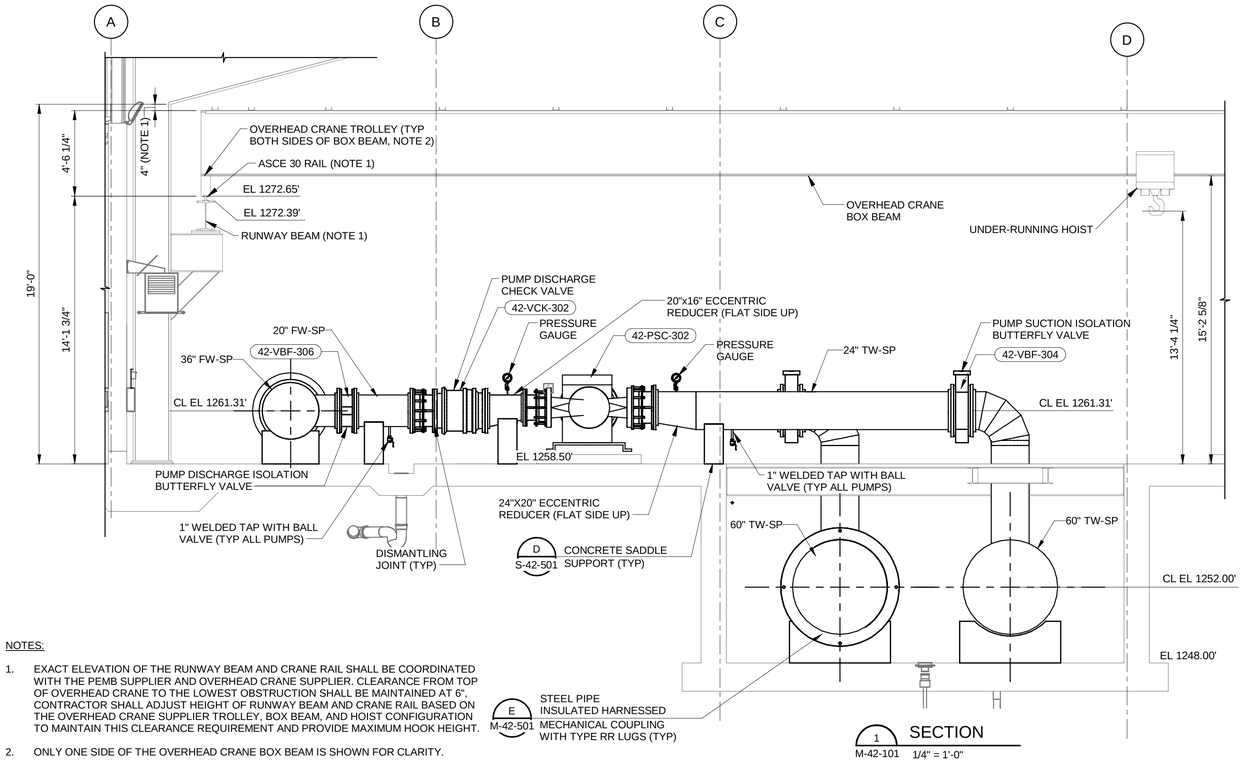

1 SECTION
M-42-101 1/4" = 1'-0"

NOTES:

1. EXACT ELEVATION OF THE RUNWAY BEAM AND CRANE RAIL SHALL BE COORDINATED WITH THE PEMB SUPPLIER AND OVERHEAD CRANE SUPPLIER. CLEARANCE FROM TOP OF OVERHEAD CRANE TO THE LOWEST OBSTRUCTION SHALL BE MAINTAINED AT 6". CONTRACTOR SHALL ADJUST HEIGHT OF RUNWAY BEAM AND CRANE RAIL BASED ON THE OVERHEAD CRANE SUPPLIER TROLLEY, BOX BEAM, AND HOIST CONFIGURATION TO MAINTAIN THIS CLEARANCE REQUIREMENT AND PROVIDE MAXIMUM HOOK HEIGHT.
2. ONLY ONE SIDE OF THE OVERHEAD CRANE BOX BEAM IS SHOWN FOR CLARITY.

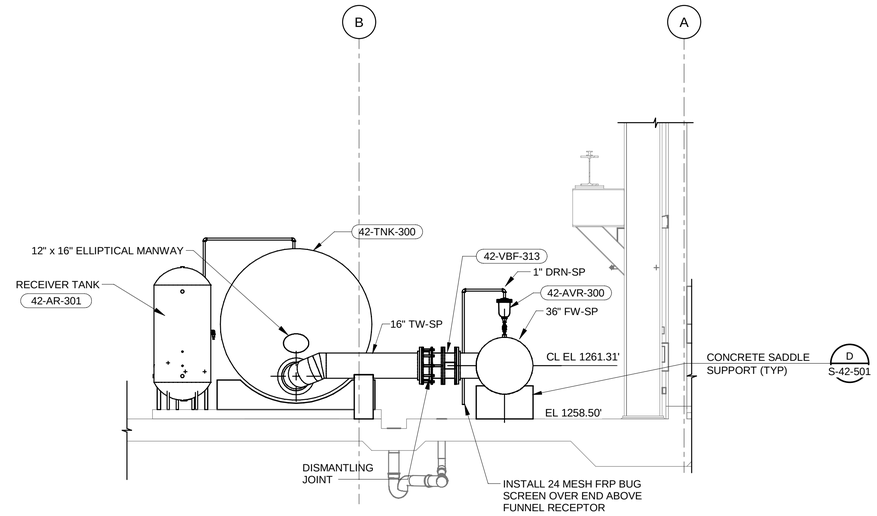

2 SECTION
M-42-102 1/4" = 1'-0"

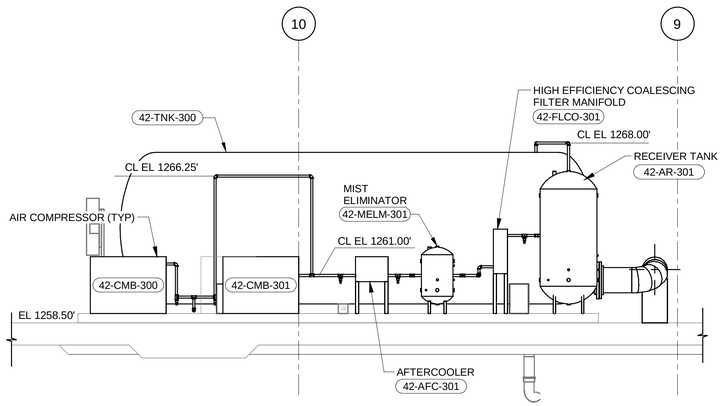

3 SECTION
M-42-102 1/4" = 1'-0"

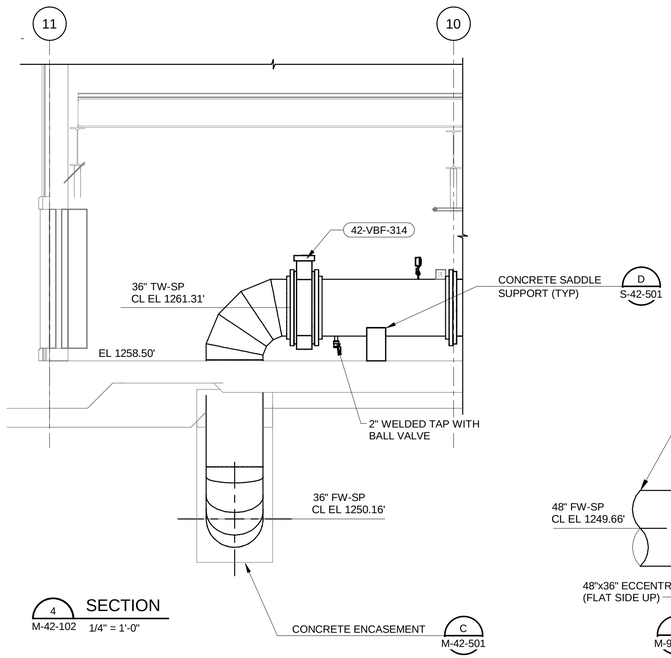

4 SECTION
M-42-102 1/4" = 1'-0"

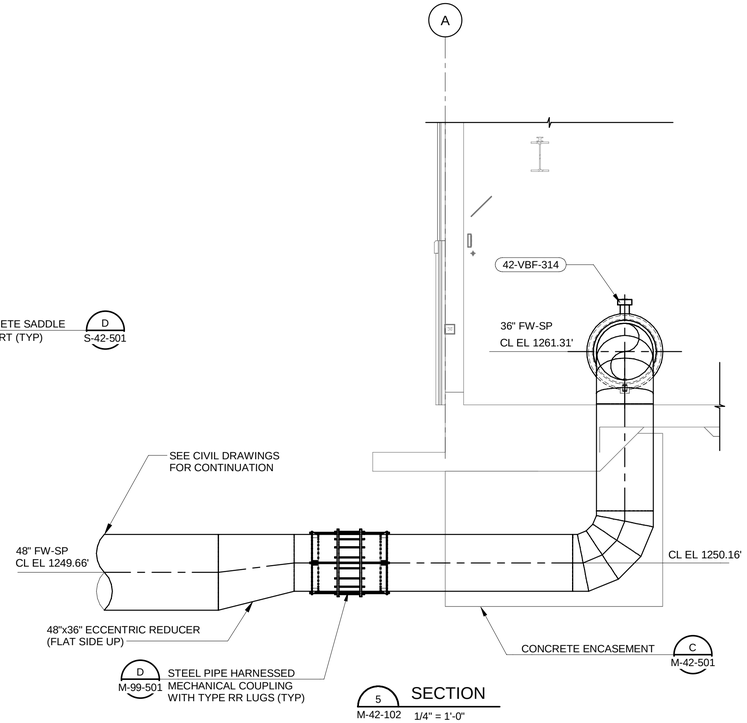

5 SECTION
M-42-102 1/4" = 1'-0"

(SCALE BAR IS 4" AT FULL SCALE) 0 1/2 1 2 3 4

Black & Veatch Corporation
Kansas City, Missouri

olsson

THIS DOCUMENT WAS ORIGINALLY ISSUED AND SEALED ON JANUARY 24, 2023 BY ANDREW J. HANSEN, A LICENSED PROFESSIONAL ENGINEER IN THE STATE OF ARKANSAS, E-14664

BEAVER WATER DISTRICT

WESTERN CORRIDOR PUMP STATION

100% SET

REVISIONS AND RECORD OF ISSUE

DESIGNED:	CJK
DETAILED:	BCS
CHECKED:	TAM
APPROVED:	AJH
DATE:	JANUARY 24, 2023
PROJECT NO.:	405654

PUMP STATION

PROCESS MECHANICAL

SECTIONS

M-42-302

76 OF 159

PLOTTED: 1/20/2023 7:31:45 AM
FILE: BIM 360://405654 - BWD Western Corridor Pump Station/405654-42-PUMP STATION.rvt
D11000

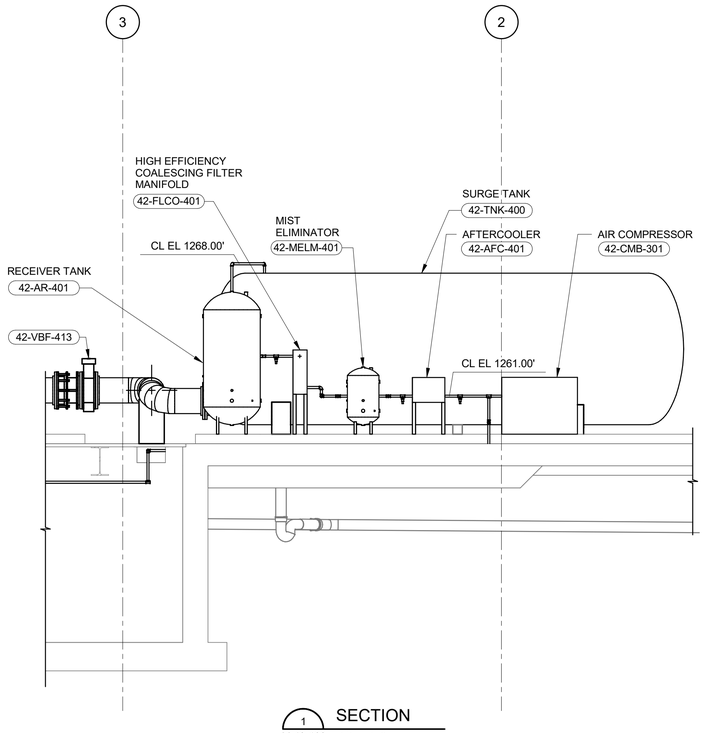

1 SECTION
M-42-103 1/4" = 1'-0"

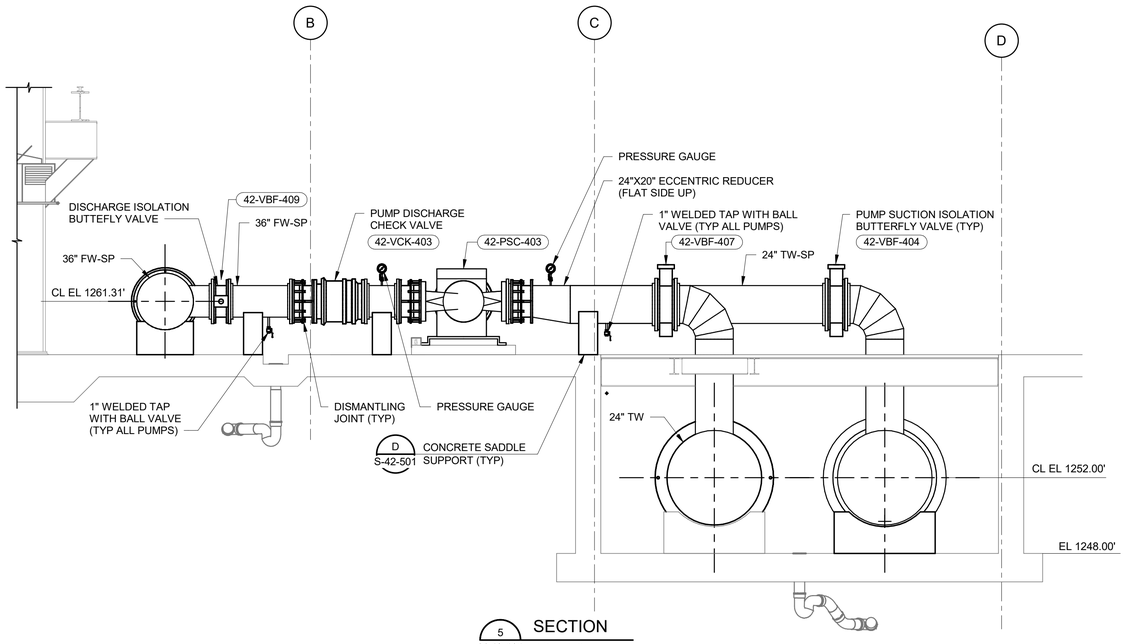

5 SECTION
M-42-101 1/4" = 1'-0"

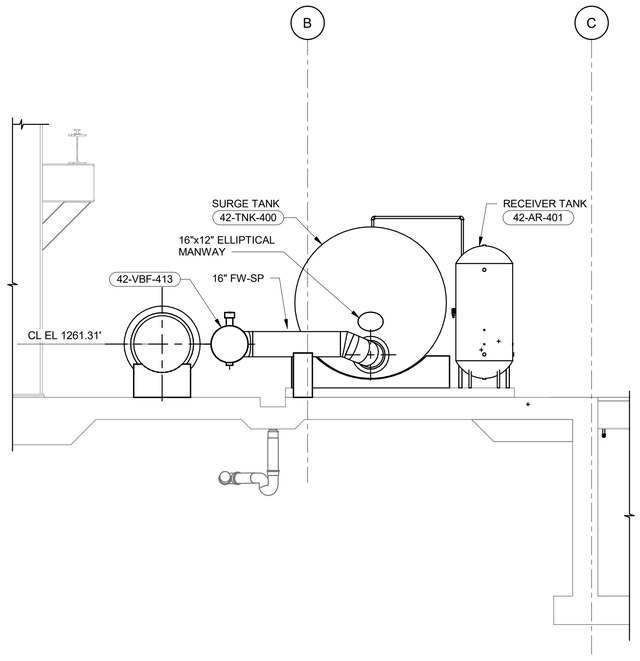

3 SECTION
M-42-103 1/4" = 1'-0"

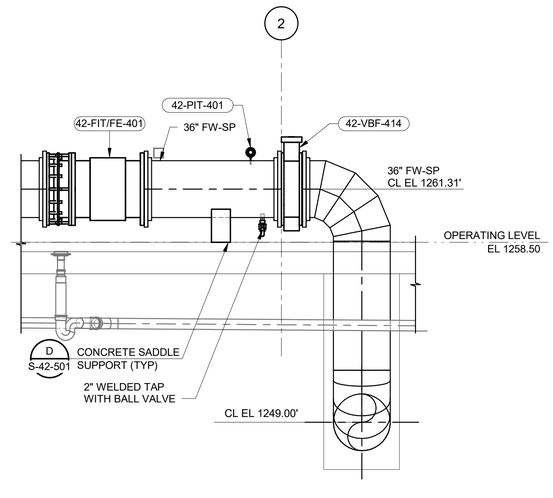

4 SECTION
M-42-103 1/4" = 1'-0"

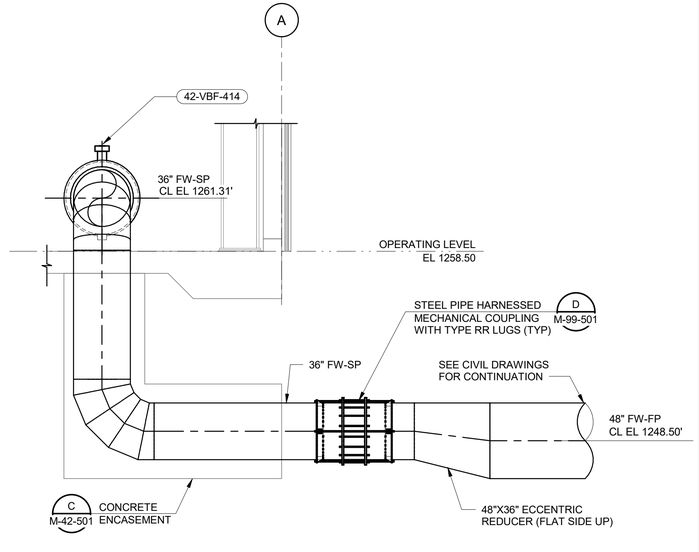

2 SECTION
M-42-103 1/4" = 1'-0"

(SCALE BAR IS 4" AT FULL SCALE) 0 1/2 1 2 3 4

BLACK & VEATCH

Black & Veatch Corporation
Kansas City, Missouri

olsson

THIS DOCUMENT WAS ORIGINALLY ISSUED AND SEALED ON JANUARY 24, 2023 BY ANDREW J. HANSEN, A LICENSED PROFESSIONAL ENGINEER IN THE STATE OF ARKANSAS, E-14664

BEAVER WATER DISTRICT

WESTERN CORRIDOR PUMP STATION

100% SET

REVISIONS AND RECORD OF ISSUE	
DESIGNED:	CJK
DETAILED:	BCS
CHECKED:	TAM
APPROVED:	AJH
DATE:	JANUARY 2023
PROJECT NO.:	405654

PUMP STATION

PROCESS MECHANICAL

SECTIONS

M-42-303

77 OF 159

PLOTTED: 1/19/2023 10:15:26 AM
FILE: BIM 360://405654 - BWD Western Corridor Pump Station/405654-42-PUMP STATION.rvt
D11000

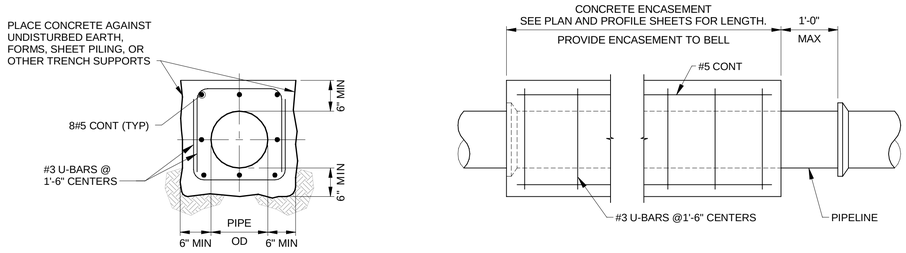

SECTION

ELEVATION

NOTES:

1. WHEN THE PIPELINE IS PROTECTED WITH POLYETHYLENE TUBE ENCASEMENT, THE CONCRETE ENCASEMENT IS TO COVER THE POLYETHYLENE ENCASEMENT.

A CONCRETE ENCASEMENT

NO SCALE

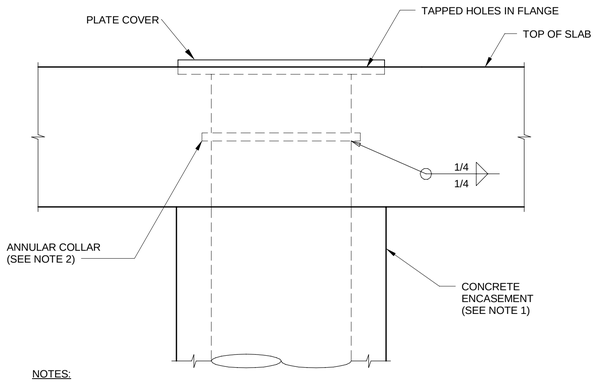

NOTES:

1. SLAB-ON-GRADE APPLICATIONS REQUIRE CONCRETE ENCASEMENT OF BELOW SLAB PIPING. RESTRAINED STYLE JOINTS ARE REQUIRED WHERE PIPE IS CONCRETE ENCASED.
2. ANNULAR COLLAR SHALL BE SAME MATERIAL AS PIPE. 1/4" X 2" FOR STEEL PIPE 20" AND SMALLER, AND 3/8" X 3" FOR PIPE LARGER THAN 20".
3. BOLT HOLES OF FLOOR PIPE SHALL BE ALIGNED WITH CONNECTING PIPE.

B FLANGED SLAB-ON-GRADE FLOOR PIPE

NO SCALE

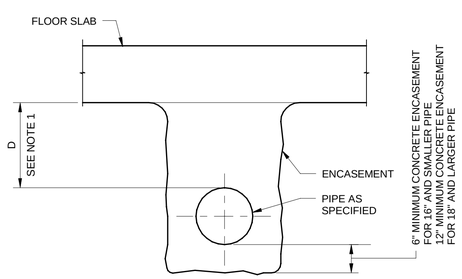

NOTE:
1. IF D IS LESS THAN 1'-6", PROVIDE ENCASEMENT CONTINUOUS TO SLAB.
IF D IS GREATER THAN 1'-6", ENCASEMENT MAY BE SEPARATED FROM SLAB.

C CONCRETE PIPE ENCASEMENT

NO SCALE

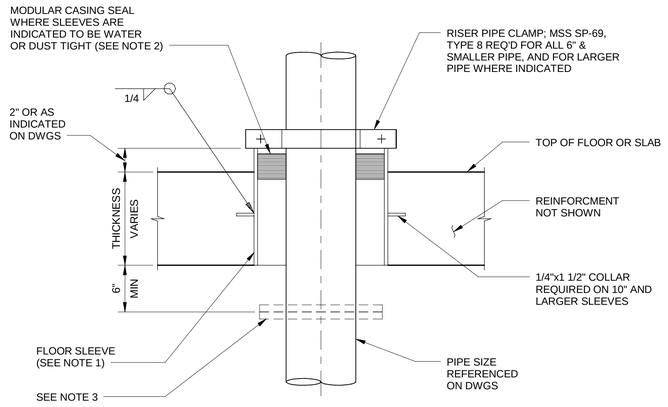

NOTES :

1. FLOOR SLEEVE, SCHEDULE 40 STEEL PIPE FOR 12" AND SMALLER SLEEVES, 1/4" STEEL PIPE FOR SLEEVES LARGER THAN 12", AND HOT DIP GALVANIZE AFTER FABRICATION. COORDINATE SIZE OF SLEEVE WITH MODULAR SEAL MANUFACTURER.
2. FIRESAFING TO BE PROVIDED AT ALL RATED LOCATIONS INDICATED ON THE DRAWINGS AND INSTALLED PER ACCEPTED UL RATED SYSTEMS.
3. TO MINIMIZE SLEEVE SIZE PROVIDE A SCREW-ON FLANGE OR MECHANICAL COUPLING WITH ANCHOR STUDS ON ONE SIDE OF OPENING.

D STEEL FLOOR SLEEVE

NO SCALE

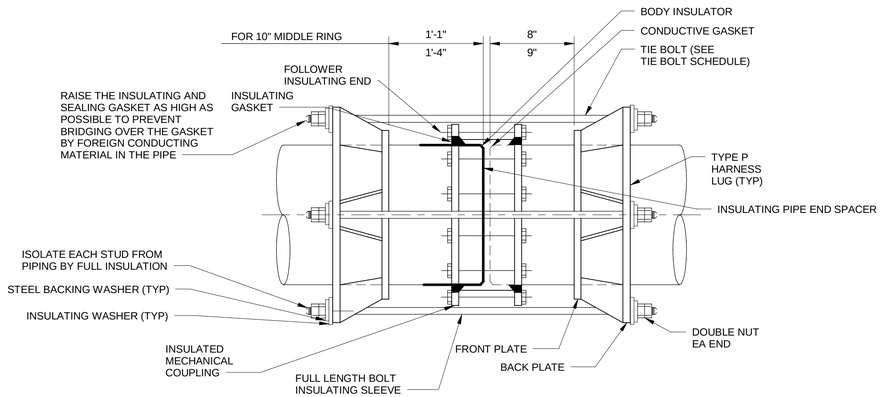

NOTES:

1. THE PIPE FOR LUG DESIGN SHALL INCLUDE WRAPPERS OR PADS OR THE PIPE WALL THICKNESS INCREASED AS REQUIRED TO MEET MINIMUM PIPE THICKNESS IN ACCORDANCE WITH AWWA M-11 DESIGN REQUIREMENTS.

E STEEL PIPE HARNESSED INSULATED MECHANICAL COUPLING WITH TYPE RR LUGS

NO SCALE

(SCALE BAR IS 4" AT FULL SCALE) 0 1/2 1 2 3 4

BLACK & VEATCH
Black & Veatch Corporation
Kansas City, Missouri

olsson

THIS DOCUMENT WAS ORIGINALLY ISSUED AND SEALED ON JANUARY 24, 2023 BY ANDREW J. HANSEN, A LICENSED PROFESSIONAL ENGINEER IN THE STATE OF ARKANSAS, E-14664

BEAVER WATER DISTRICT

WESTERN CORRIDOR PUMP STATION

100% SET

REVISIONS AND RECORD OF ISSUE

DESIGNED:	CJK
DETAILED:	BCS
CHECKED:	TAM
APPROVED:	AJH
DATE:	JANUARY 24, 2023
PROJECT NO.:	405654

PUMP STATION

PROCESS MECHANICAL

DETAILS

M-42-501

PLOTTED: 1/20/2023 7:34:41 AM
FILE: BIM 360://405654 - BWD Western Corridor Pump Station/405654-42-PUMP STATION.rvt
D11000

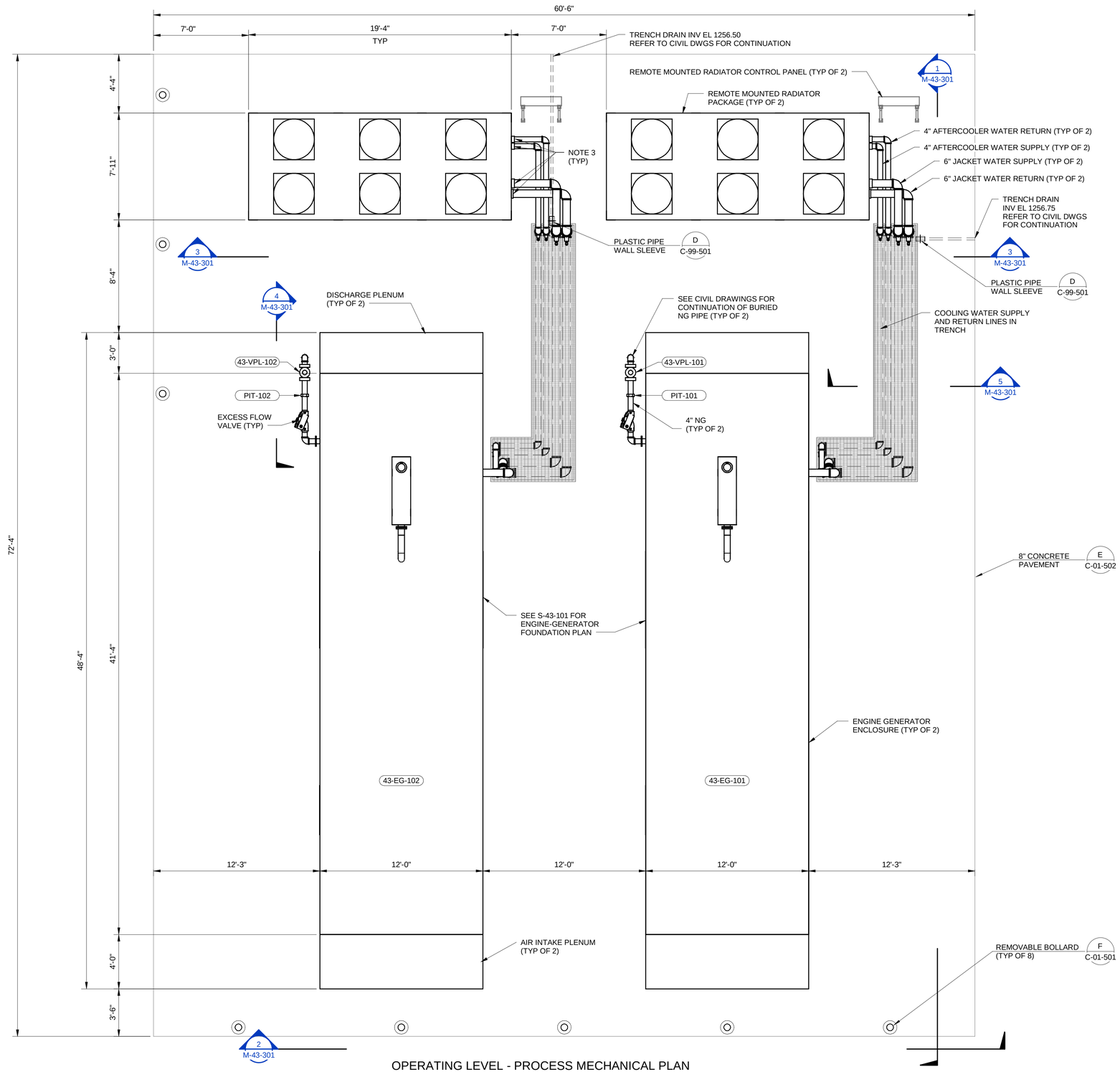

OPERATING LEVEL - PROCESS MECHANICAL PLAN

1/4" = 1'-0"

4' 2' 0' 4' 8'

1/4" = 1'-0"

NOTES:

1. CONTRACTOR SHALL COORDINATE FOUNDATION DIMENSIONS WITH EQUIPMENT FURNISHED.
2. CONTRACTOR SHALL PROVIDE EXPANSION JOINT MATERIAL BETWEEN THE 8" CONCRETE PAVEMENT AND THE ENGINE-GENERATOR FOUNDATION.
3. CONTRACTOR SHALL PROVIDE ISOLATION BALL VALVES ON THE SUPPLY AND RETURN WATER LINES AT THE REMOTE MOUNTED RADIATOR (TYP OF EACH RADIATOR).
4. ALL AFTER COOLER AND JACKET WATER PIPING SHALL BE INSULATED.
5. TRENCH SHALL HAVE A DEPTH OF 18".
6. ALL PIPING BETWEEN RADIATORS AND ENGINE GENERATOR EQUIPMENT SHALL BE INSULATED AND JACKETED DUE TO TEMPERATURE AND TO BE FURNSHIED BY CONTRACTOR. INSULATION NOT SHOWN FOR CLARITY.
7. PIPING CONNECTION LOCATIONS AND ELEVATIONS TO BE DETERMINED BY EQUIPMENT FURNISHED.
8. EXPANION TANK PIPE NOT SHOWN FOR CLAIRTY. EXPANSION TANK PIPE SHALL BE ROUTED ABOVE GROUND BETWEEN THE ENGINE GENERATOR AND REMOTE RADIATOR AND SHALL BE LOCATED AT THE HIGHEST POINT IN EACH PIPING SYSTEM.
9. CONTRACTOR TO COORDINATE LAYOUT AND REQUIRED DIMENSION OF EQUIPMENT PAD WITH FINAL EQUIPMENT FURNISHED.
10. REMOTE RADIATOR ALTERNATIVE SHOWN.

(SCALE BAR IS 4" AT FULL SCALE) 0 1/2 1 2 3 4

BLACK & VEATCH

Black & Veatch Corporation
Kansas City, Missouri

olsson

THIS DOCUMENT WAS ORIGINALLY ISSUED AND SEALED ON JANUARY 24, 2023 BY ANDREW J. HANSEN, A LICENSED PROFESSIONAL ENGINEER IN THE STATE OF ARKANSAS, E-14664

BEAVER WATER DISTRICT

WESTERN CORRIDOR PUMP STATION

100% SET

REVISIONS AND RECORD OF ISSUE

DESIGNED:	CJK
DETAILED:	BCS
CHECKED:	TAM
APPROVED:	AJH
DATE:	JANUARY 2023
PROJECT NO.:	405654

ENGINE GENERATOR ENCLOSURES

PROCESS MECHANICAL

PLAN

M-43-101

79 OF 159

PLOTTED: 1/20/2023 7:26:34 AM
FILE: BIM 360://405654 - BWD Western Corridor Pump Station/405654-44-GENERATOR ENCLOSURE.rvt
D11000

NOTES:

1. CONTRACTOR SHALL COORDINATE FOUNDATION DIMENSIONS WITH EQUIPMENT FURNISHED.
2. CONTRACTOR SHALL PROVIDE EXPANSION JOINT MATERIAL BETWEEN THE 8" CONCRETE PAVEMENT AND THE ENGINE-GENERATOR FOUNDATION.
3. CONTRACTOR SHALL PROVIDE ISOLATION BALL VALVES ON THE SUPPLY AND RETURN WATER LINES AT THE REMOTE MOUNTED RADIATOR (TYP OF EACH RADIATOR).
4. ALL AFTER COOLER AND JACKET WATER PIPING SHALL BE INSULATED.
5. TRENCH SHALL HAVE A DEPTH OF 18".
6. ALL PIPING BETWEEN RADIATORS AND ENGINE GENERATOR EQUIPMENT SHALL BE INSULATED AND JACKETED DUE TO TEMPERATURE AND TO BE FURNSHIED BY CONTRACTOR. INSULATION NOT SHOWN FOR CLARITY.
7. PIPING CONNECTION LOCATIONS AND ELEVATIONS TO BE DETERMINED BY EQUIPMENT FURNISHED.
8. EXPANION TANK PIPE NOT SHOWN FOR CLAIRTY. EXPANSION TANK PIPE SHALL BE ROUTED ABOVE GROUND BETWEEN THE ENGINE GENERATOR AND REMOTE RADIATOR AND SHALL BE LOCATED AT THE HIGHEST POINT IN EACH PIPING SYSTEM.
9. CONTRACTOR TO COORDINATE LAYOUT AND REQUIRED DIMENSION OF EQUIPMENT PAD WITH FINAL EQUIPMENT FURNISHED.
10. REMOTE RADIATOR ALTERNATIVE SHOWN.
11. CONTRACTOR TO COORDINATE NUMBER OF SUPPORT LEGS PROVIDED WITH THE REMOTE MOUNTED RADIATORS.

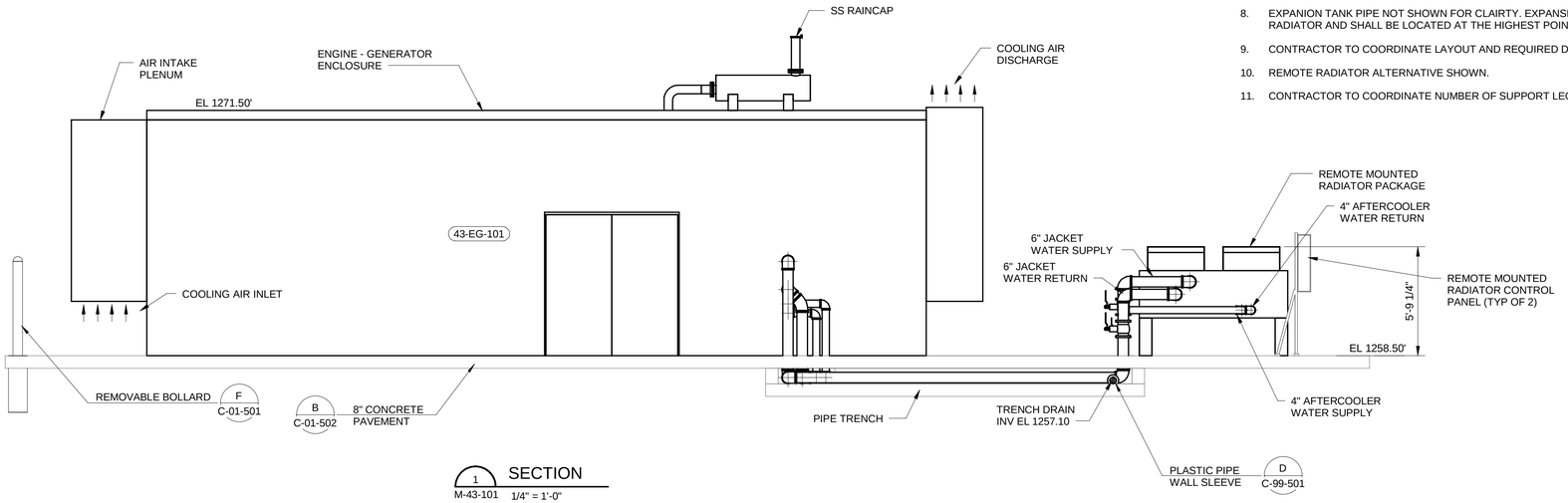

1 SECTION
M-43-101 1/4" = 1'-0"

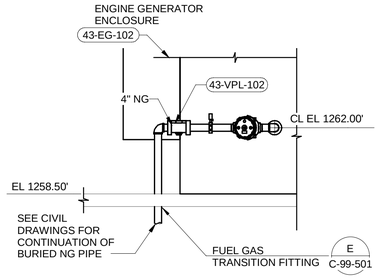

4 SECTION
M-43-101 1/4" = 1'-0"

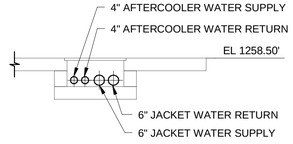

5 SECTION
M-43-101 1/4" = 1'-0"

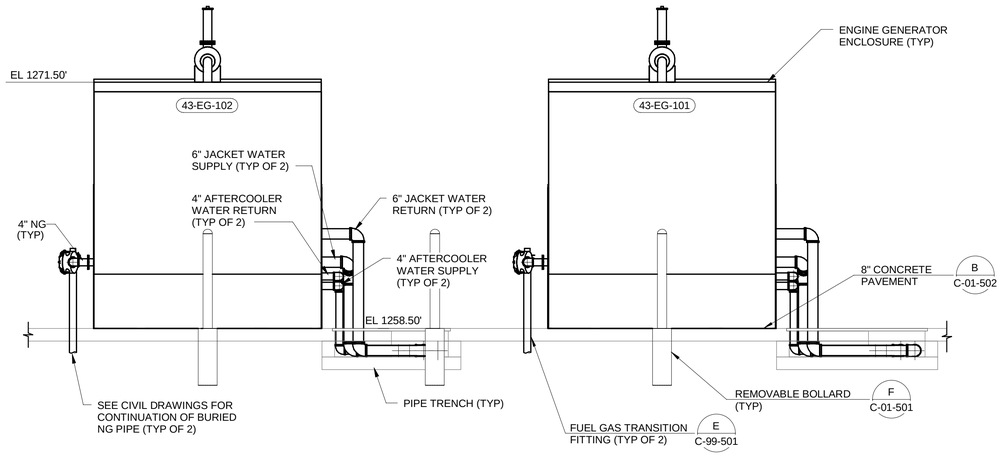

2 SECTION
M-43-101 1/4" = 1'-0"

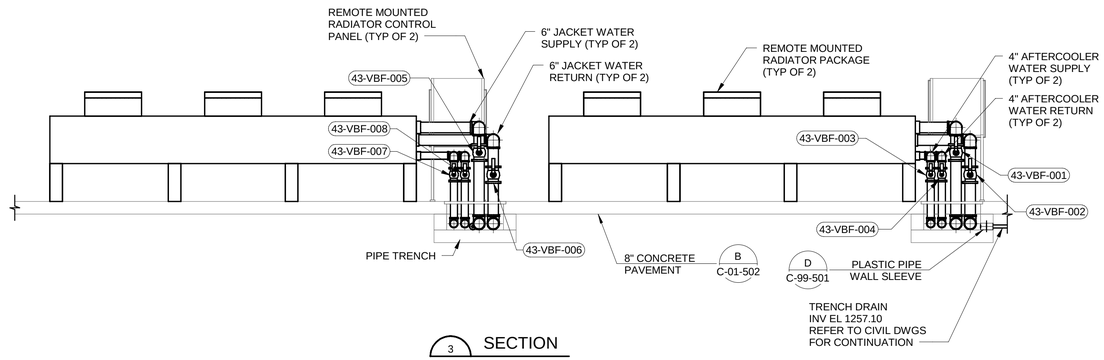

3 SECTION
M-43-101 1/4" = 1'-0"

(SCALE BAR IS 4" AT FULL SCALE) 0 1/2 1 2 3 4

PLOTTED: 1/20/2023 7:26:41 AM
FILE: BIM 360://405654 - BWD Western Corridor Pump Station/405654-44-GENERATOR ENCLOSURE.rvt
D11000

BLACK & VEATCH
Black & Veatch Corporation
Kansas City, Missouri

olsson

THIS DOCUMENT WAS ORIGINALLY ISSUED AND SEALED ON JANUARY 24, 2023 BY ANDREW J. HANSEN, A LICENSED PROFESSIONAL ENGINEER IN THE STATE OF ARKANSAS, E-14664

BEAVER WATER DISTRICT

WESTERN CORRIDOR PUMP STATION

100% SET

REVISIONS AND RECORD OF ISSUE

DESIGNED:	CJK
DETAILED:	BCS
CHECKED:	TAM
APPROVED:	AJH
DATE:	JANUARY 2023
PROJECT NO.:	405654

ENGINE GENERATOR ENCLOSURES

PROCESS MECHANICAL

SECTIONS

M-43-301

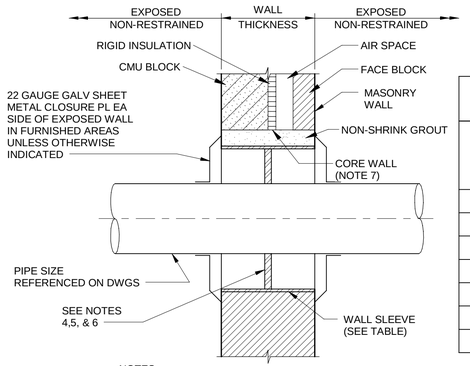

WALL SLEEVE TABLE	
PIPE SIZE	SLEEVE SIZE UNLESS OTHERWISE INDICATED (SEE NOTES 3 & 4)
1"& SMALLER	3"
1 1/4"&1 1/2"	3 1/2"
2" & 2 1/2"	4"
3"	6"
4"	6"
6"	8"
8"& LARGER	PIPE OD+2"±

NOTES:

1. SCHEDULE 40 GALV STEEL PIPE FOR PIPING SMALLER THAN 3", SCHEDULE 20 GALV STEEL PIPE FOR PIPING SMALLER THAN 6", AND GALV 1/4" MINIMUM WALL THICKNESS FOR PIPING LARGER THAN 6".
2. FOR PIPING LARGER THAN 3" PROVIDE PIPE SUPPORT WITHIN 3' OF WALL SLEEVE TO PREVENT THE TRANSFER OF PIPE LOADS TO MASONRY WALL WHEN MODULAR CASING SEALS ARE USED.
3. WHERE REQUIRED, USE SLEEVE LARGE ENOUGH FOR FLANGE OR OTHER JOINT RESTRAINT TO PASS THROUGH.
4. FOR PIPE SIZES 1 1/2" IN DIAMETER AND SMALLER, CAULK ANNULAR SPACE AROUND PIPE. FOR PIPE LARGER THAN 1 1/2" IN DIAMETER, USE MODULAR CASING SEALS AND COORDINATE SLEEVE SIZE WITH CASING SEAL MANUFACTURER.
5. PROVIDE MODULAR CASING SEALS ON ALL SLEEVES AT CHLORINE AND AMMONIA FEED AND STORAGE ROOMS AND WHERE INDICATED ON THE DRAWINGS. COORDINATE SLEEVE SIZE WITH CASING SEAL MANUFACTURER.
6. FIRESAFING TO BE PROVIDED AT ALL RATED WALLS INDICATED ON THE DRAWINGS AND INSTALLED PER ACCEPTED UL RATED SYSTEMS.
7. CUT OPENING FOR WALL SLEEVE, ROUGHEN EXISTING CONCRETE, APPLY BONDING AGENT, AND FILL WITH NON-SHRINK GROUT PER THE SPECIFICATIONS. DIAMETER OF THE OPENING TO BE COLLAR DIAMETER +4".
8. PROVIDE MODULAR CASING SEALS ON ALL SLEEVES AT CHLORINE AND AMMONIA FEED ROOMS AND WHERE INDICATED ON THE DRAWINGS. COORDINATE SLEEVE SIZE WITH CASING SEAL MANUFACTURER.

A MASONRY WALL SLEEVE
NO SCALE

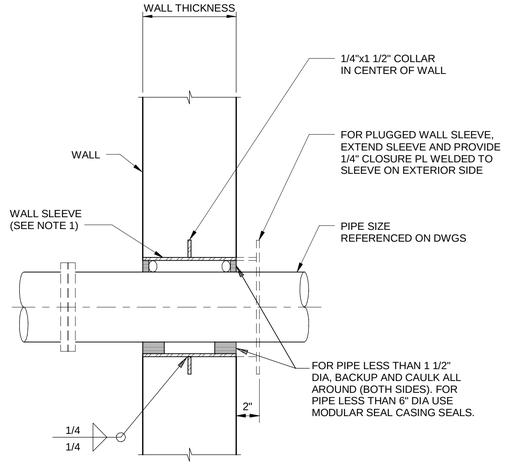

NOTES:

1. WALL SLEEVE, SCHEDULE 40 STEEL PIPE FOR 12" AND SMALLER SLEEVES, 1/4" STEEL PIPE FOR SLEEVES LARGER THAN 12", AND HOT DIP GALVANIZED AFTER FABRICATION, 304 SS, OR OTHER MATERIAL AS SPECIFIED OR INDICATED ON DRAWINGS. COORDINATE WALL SLEEVE DIAMETER WITH MODULAR CASING SEAL MANUFACTURER.

B CONCRETE WALL SLEEVE
NO SCALE

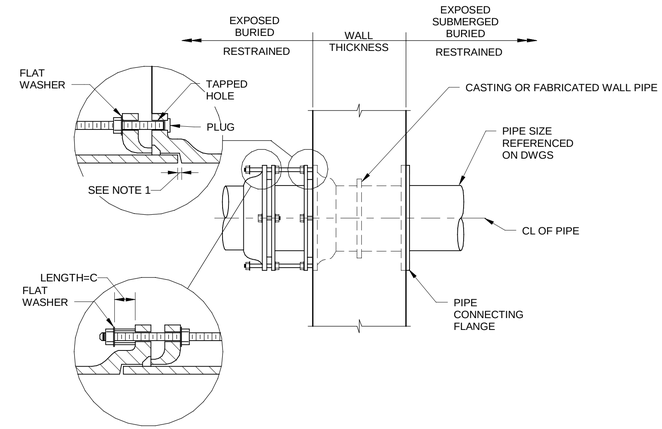

NOTES:

1. FOR PIPING FLEXIBILITY, PROVIDE GAP LARGE ENOUGH TO FACILITATE PIPE ASSEMBLY AND DISASSEMBLY AT ASSOCIATED FLANGE PIPE JOINTS.
2. BOLTS FOR WALL FLANGE SHALL BE BOLT-STUDS ON WALL PIPE. ALL BOLT HOLES IN WALL PIPE SHALL BE TAPPED. WALL PIPES SHALL BE ORIENTED SO THAT THE BOLT HOLES STRADDLE THE TOP CENTERLINE.

C FLANGED - MECHANICAL JOINT WALL PIPE WITH TIE RODS
NO SCALE

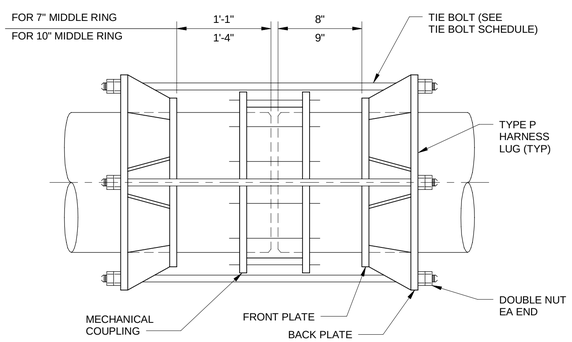

NOTES:

1. THE PIPE FOR LUG DESIGN SHALL INCLUDE WRAPPERS OR PADS OR THE PIPE WALL THICKNESS INCREASED AS REQUIRED TO MEET MINIMUM PIPE THICKNESS IN ACCORDANCE WITH AWWA M-11 DESIGN REQUIREMENTS.

D M-42-303 STEEL PIPE HARNESSED MECHANICAL COUPLING WITH TYPE RR LUGS
12" = 1'-0"

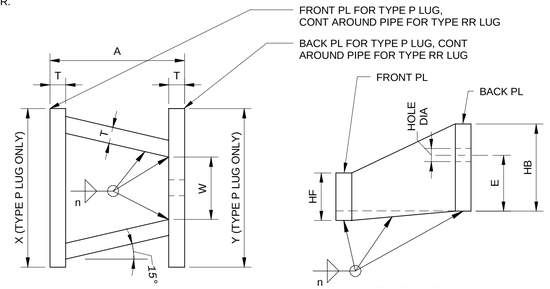

PLAN ELEVATION

DIMENSIONS IN INCHES									
TIE BOLT DIAMETER	T	A	Y	W	X	HB	E	HF	HOLE DIAMETER
7/8	1/2	5 1/2	5	1 5/8	5	4 1/4	3 1/8	2	1
1 1/8	1/2	7	RING	1 7/8	RING	4 3/4	3 5/8	2 1/2	1 1/4
1 1/2	3/4	10	RING	2 1/4	RING	5 1/2	3 7/8	2 1/2	1 5/8
1 3/4	7/8	12	RING	2 1/2	RING	5 7/8	4	2 1/2	1 7/8

NOTES:

1. n = PIPE WALL THICKNESS.
2. FOR HARNESS LUG TYPE RR, THE GUSSET PLATES BETWEEN THE FRONT PLATE AND THE BACK PLATE MAY BE PERPENDICULAR TO THE FRONT AND BACK PLATES WITH A MINIMUM CLEAR DISTANCE BETWEEN EACH PAIR OF GUSSET PLATES OF DIMENSION W.

STEEL PIPE TIE BOLT SCHEDULE FOR HARNESSED JOINTS				
NOMINAL PIPE SIZE (INCHES)	PRESSURE (psi) (NOTE 1)	LUG TYPE	TIE BOLT DIA (INCHES)	NO. BOLTS (NOTE 3)
36	150	RR	1 3/8	4
	200	RR	1 1/4	6
	250	RR	1 3/8	6
60	100	RR	1 1/2	6
	150	RR	1 1/2	8
	200	RR	1 3/4	8

NOTES:

1. PRESSURE SHALL BE THE PRESSURE AT WHICH THE PIPE IS HYDROSTATICALLY TESTED, OR IF THERE IS NO HYDROSTATIC FIELD TEST, IT SHALL BE THE SPECIFIED SHOP TEST PRESSURE.
2. NUMBER OF TIE BOLTS IS BASED ON AN ALLOWABLE STRESS ON NET TENSION AREA OF 40,000 PSI.
3. UNLESS OTHERWISE INDICATED, TIE BOLTS SHALL BE SPACED UNIFORMLY AROUND THE PIPE, BEGINNING WITH THE FIRST TWO AT THE HORIZONTAL CENTERLINE OF THE PIPE, SUBJECT TO THE APPROVAL OF THE ENGINEER.

E STEEL PIPE HARNESS LUGS
NO SCALE

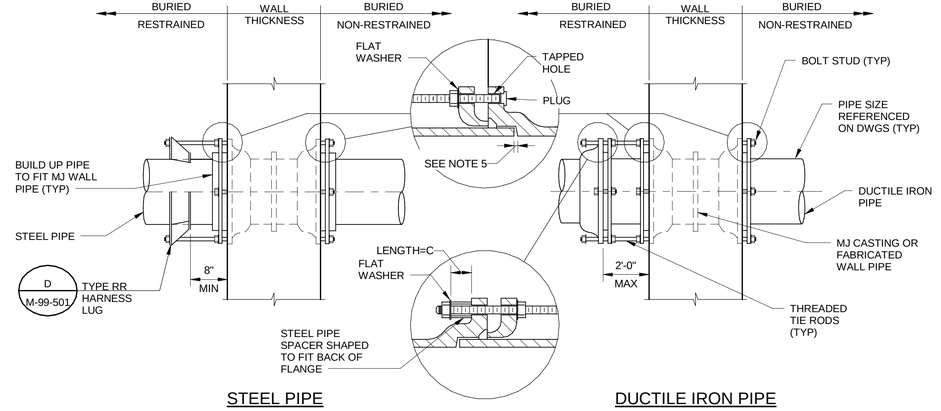

STEEL PIPE DUCTILE IRON PIPE

MECHANICAL JOINT TIE ROD SCHEDULE						
NOMINAL PIPE SIZE (INCHES)	MAX PRESSURE (PSI) (NOTE 2)	TIE BOLTS		PIPE SPACERS		
		NO. OF RODS (NOTE 3)	DIA OF RODS (INCHES)	DIA (INCHES)	LENGTH (INCHES)	PIPE SCHEDULE
16	150	4	3/4	1	3 1/2	80
20	150	6	3/4	1	3 1/2	80
24	150	8	3/4	1	3 1/2	80
30	150	10	1	1 1/4	4	80
48	150	16	1 1/4	1 1/2	4	80

NOTES:

1. PRESSURE SHALL BE THE PRESSURE AT WHICH THE PIPE IS HYDROSTATICALLY TESTED, OR IF THERE IS NO HYDROSTATIC FIELD TEST, IT SHALL BE THE SPECIFIED SHOP TEST PRESSURE..
2. UNLESS OTHERWISE INDICATED, TIE RODS SHALL BE SPACED UNIFORMLY AROUND THE PIPE, BEGINNING WITH THE FIRST TWO AT THE HORIZONTAL CENTERLINE OF THE PIPE, SUBJECT TO THE APPROVAL OF THE ENGINEER.
3. EXCEPT WHERE TIE RODS ARE REQUIRED, BOLTS FOR FOLLOWER RINGS SHALL BE BOLT-STUDS ON WALL PIPE. ALL BOLT HOLES IN WALL PIPE SHALL BE TAPPED. WALL PIPES SHALL BE ORIENTED SO THAT THE BOLT HOLES STRADDLE THE TOP CENTERLINE.
4. AT CONTRACTOR'S OPTION, 4" THROUGH 48" MAY BE FURNISHED AS MECHANICAL JOINT STYLE WITH TIE RODS, OR POSITIVE LOCKING SEGMENTS AND/OR RINGS SUCH AS AMERICAN JOINT STYLE PIPE 14" THROUGH 36" SIZE MAY BE FURNISHED AS FLEX RING STYLE RESTRAINED JOINTS.
5. FOR PIPING FLEXIBILITY, PROVIDE GAP LARGE ENOUGH TO FACILITATE PIPE ASSEMBLY AND DISASSEMBLY AT ASSOCIATED FLANGE PIPE JOINTS.

F MECHANICAL JOINT WALL PIPE WITH TIE RODS
NO SCALE

(SCALE BAR IS 4" AT FULL SCALE) 0 1/2 1 2 3 4

BLACK & VEATCH
Black & Veatch Corporation
Kansas City, Missouri

olsson

THIS DOCUMENT WAS ORIGINALLY ISSUED AND SEALED ON JANUARY 24, 2023 BY ANDREW J. HANSEN, A LICENSED PROFESSIONAL ENGINEER IN THE STATE OF ARKANSAS, E-14664

BEAVER WATER DISTRICT

WESTERN CORRIDOR PUMP STATION

100% SET

REVISIONS AND RECORD OF ISSUE

DESIGNED:	CJK
DETAILED:	BCS
CHECKED:	TAM
APPROVED:	AJH
DATE:	JANUARY 24, 2023
PROJECT NO.:	405654

PUMP STATION

PROCESS MECHANICAL

MISCELLANEOUS DETAILS

M-99-501

81 OF 159

PLOTTED: 1/20/2023 7:34:45 AM
FILE: BIM 360://405654 - BWD Western Corridor Pump Station/405654-42-PUMP STATION.rvt
D11000

ABBREVIATIONS

A	ALARM, COMPRESSED AIR OUTLET	CH	CONVECTION HEATER	EVS	EMERGENCY VENTILATION SWITCH	HR	HEAT RECOVERY UNIT, HOUR,	OCSD	ODOR CONTROL SHUTOFF DAMPER	SRP	SCRUBBER RECIRCULATION PUMP
AC	AIR COMPRESSOR	C/L	CENTERLINE	EWC	ELECTRIC WATER COOLER		HOSE REEL	OD	OUTSIDE DIAMETER	SS	STAINLESS STEEL
AD	ACCESS DOOR, AIR DRYER	CO	CLEANOUT	EWH	ELECTRIC WATER HEATER	HUH	HEATING WATER UNIT HEATER	ORD	OVERFLOW ROOF DRAIN	SSK	SERVICE SINK
AF	AIR FLOW, AIRFOIL	CONC	CONCRETE	EWT	ENTERING WATER TEMPERATURE	HUM	HUMIDIFIER	ORP	OXIDATION REDUCTION POTENTIAL	SSP	SUBMERSIBLE SUMP PUMP
AFD	ADJUSTABLE FREQUENCY DRIVE	CONN	CONNECTION	EXIST	EXISTING	HV	HOSE VALVE	P	PNEUMATIC	STD	STANDARD
AFF	ABOVE FINISH FLOOR	CONT	CONTINUATION	F	DEGREES FAHRENHEIT	HWB	HEATING WATER BOILER	PD	PRESSURE DROP (INCHES OF	SV	SERVICE VALVE, SHUTOFF VALVE,
AFM	AIR FLOW MONITOR	CP	CIRCULATING PUMP	FA	FOUL AIR	HWP	HEATING WATER PUMP		WATER FOR AIR, FEET OF WATER		SUPPLY VALVE, SOLENOID VALVE
AHU	AIR HANDLING UNIT	CS	CUP SINK	FBD	FACE AND BYPASS DAMPER	HZ	HERTZ		FOR FLUIDS)	T	THERMOSTAT
ALUM	ALUMINUM	CT	COOLING TOWER	FC	FORWARD CURVE, FAN COIL	I	INTAKE	PAC	PACKAGED AIR CONDITIONING UNIT	TCP	TEMPERATURE CONTROL PANEL
AP	ACCESS PANEL	CU	CONDENSING UNIT	FCO	FLOOR CLEANOUT	ID	INSIDE DIAMETER	PAH	PACKAGED AIR HANDLING UNIT	TCV	TEMPERATURE CONTROL VALVE
APPROX	APPROXIMATE	CV	CHECK VALVE, CONTROL VALVE	FD	FIRE DAMPER, FLOOR DRAIN	IN	INCHES	PDI	PLUMBING AND DRAINAGE INSTITUTE	TD	TRENCH DRAIN
AR	AIR RECEIVER	CWP	CHILLED WATER PUMP	FDB	DEGREES FAHRENHEIT DRY BULB	INV	INVERT	PDS	PRESSURE DIFFERENTIAL SWITCH	TE	TEMPERATURE ELEMENT
AS	AIR SEPARATOR	CWW	CLEAR WATER WASTE	FEF	FUME EXHAUST FAN	JS	JANITOR'S SINK	PF	PROPELLER FAN	TL	TOP LEVEL
ATU	AIR TERMINAL UNIT	D	DIRECT DRIVE, DRAW-THRU	FLEX	FLEXIBLE	KS	KITCHEN SINK	PHP	PACKAGED HEAT PUMP	TP	TRAP PRIMER
AUTO	AUTOMATIC	DB	DRY BULB	FM	FLOW METER	KW	KILOWATT	PL	PLATE	TS	TIP SPEED, TAMPER SWITCH
AVG	AVERAGE	DDC	DIRECT DIGITAL CONTROL	FPM	FEET PER MINUTE	L	LINED DUCT, LOUVER	POS	POSITION	TYP	TYPICAL
AVS	AUTOMATIC VALVE STATION	DEH	DEHUMIDIFIER	FR	FUNNEL RECEPTOR	LAT	LEAVING AIR TEMPERATURE	PPM	PARTS PER MILLION	UR	URINAL
B	BELT DRIVE, BLOW THROUGH	DF	DRINKING FOUNTAIN, DUCT FAN	FRP	FIBERGLASS REINFORCED PLASTIC	LAV	LAVATORY	PROP	PROPELLER	V	VERTICAL
BDD	BACKDRAFT DAMPER	DIA	DIAMETER		PIPE	LBS	POUNDS	PRS	PRESSURE REDUCING STATION	VAC	VACUUM OUTLET
BF	BLIND FLANGE	DM	DUCT MOUNTED	FS	FLOOR SINK, FLOW SWITCH	LD	COMBINATION LOUVER/DAMPER	PRV	POWER ROOF VENTILATOR,	VANE	VANEAXIAL
BFF	BELOW FINISH FLOOR	DN	DOWN	FSD	COMBINATION FIRE/SMOKE DAMPER	LI	LEVEL INDICATOR		PRESSURE REDUCING VALVE	VAV	VARIABLE AIR VOLUME
BF	BACKFLOW PREVENTER	DSN	DOWNSPOUT NOZZLE	FSW	FILTER SURFACE WASH	LS	LABORATORY SINK, LEVEL SWITCH	PS	PRESSURE SWITCH	VB	VACUUM BREAKER
BH	BASEBOARD HEATER	DX	DIRECT EXPANSION	FT	FEET, FIN TUBE HEATER, FLOW	LWT	LEAVING WATER TEMPERATURE	PSI	POUNDS PER SQUARE INCH	VCD	VOLUME CONTROL DAMPER
BI	BACKWARD INCLINED, BUILT-IN	E	TUBE			MAU	MAKEUP AIR UNIT	PSIA	POUNDS PER SQUARE INCH ABSOLUTE	VF	VANEAXIAL FAN
	THERMOSTAT		EXHAUST	FUR	FURNACE	MAX	MAXIMUM	PSIG	POUNDS PER SQUARE INCH GAUGE	VP	VACUUM PUMP
BL	BOTTOM LEVEL	EA	EACH, EXHAUST AIR	FWB	DEGREES FAHRENHEIT WET BULB	MCA	MINIMUM CIRCUIT AMPS	PTAC	PACKAGED TERMINAL AIR	VSP	VERTICAL COLUMN SUMP PUMP
BLDG	BUILDING	EAT	ENTERING AIR TEMPERATURE	G	GAS OUTLET	ME	MIST ELIMINATOR		CONDITIONER	VTR	VENT THRU ROOF
BLR	BLOWER	EC	ECONOMIZER, EVAPORATIVE COOLER	GA	GAUGE	MFR	MANUFACTURER	RA	REACTIVATION AIR, RETURN AIR	W	WIDE FLANGE, WIDTH
BOD	BOTTOM OF DUCT ELEVATION	ECH	ELECTRIC CABINET HEATER	GALV	GALVANIZED	MOCP	MAXIMUM OVERCURRENT PROTECTION	RAC	ROOM AIR CONDITIONER	WB	WET BULB
BOT	BOTTOM	ECP	EQUIPMENT CONTROL PANEL	GD	GARBAGE DISPOSER	MIN	MINIMUM	RCS	REMOTE CONTROL STATION	WBP	WATER BOOSTER PUMP
BTF	BIOTRICKLING FILTER	EDH	ELECTRIC DUCT HEATER	GIH	GAS INFRARED HEATER	MOD	MODULATING	RD	ROOF DRAIN	WC	WATER CHILLER, WATER CLOSET
BTUH	BRITISH THERMAL UNITS PER HOUR	EEW	EMERGENCY EYE WASH	GPM	GALLONS PER MINUTE	MS	MOP SINK	REQD	REQUIRED		WATER COLUMN
BU	BELL-UP	EF	EXHAUST FAN	GUH	GAS UNIT HEATER	NC	NORMALLY CLOSED	RH	RELATIVE HUMIDITY, ROOF HOOD	WCO	WALL CLEANOUT
BV	BALL VALVE	EFF	EFFICIENCY	GV	GATE VALVE	NO	NORMALLY OPEN, NUMBER	RSF	ROOF SUPPLY FAN	WF	WALL FAN
C	CHANNEL, CONVECTOR, COOLING,	EGS	EMERGENCY GAS SCRUBBER	GW	GLASS WASHER	NPSHR	NET POSITIVE SUCTION HEAD	SA	SUPPLY AIR	WG	WATER GAUGE
	COOLING (MAKE ON RISE)	EIH	ELECTRIC INFRARED HEATER	GWH	GAS WATER HEATER		REQUIRED	SCD	SMOKE CONTROL DAMPER	WH	WALL HEATER, WALL HYDRANT
CAU	CARBON ADSORPTION UNIT	EL	ELEVATION	H	HAND OPERATOR, HEATING,	NT	NEUTRALIZATION TANK	SCFM	STANDARD CUBIC FEET PER	WHA	WATER HAMMER ARRESTOR
CB	CENTRIFUGAL BLOWER	EP	EXPLOSION PROOF		HEATING (MAKE ON FALL), HEIGHT,	OA	OUTSIDE AIR		MINUTE	WM	WALL MOUNTED
CBD	COUNTERBALANCE BACKDRAFT DAMPER	EQUIP	EQUIPMENT		HORIZONTAL, HUMIDISTAT	OC	ODOR CONTROL	SCP	SCRUBBER CONTROL PANEL	WST	WATER STORAGE TANK
CC	COOLING COIL	ES	EMERGENCY SHOWER, EMERGENCY	HC	HEATING COIL	OCBD	ODOR CONTROL BALANCE DAMPER	SF	SQUARE FEET, SUPPLY FAN	WT	WEIGHT
CCU	CARBON CANISTER UNIT		SWITCH	HCH	HEATING WATER CABINET HEATER	OCF	ODOR CONTROL FAN	SH	SHEET, SHOWER	WV	WATER CONTROL VALVE
CD	CONTROL DAMPER	ES/EEW	EMERGENCY SHOWER AND EYEWASH	HE	HEAT EXCHANGER, HELIUM	OCFS	ODOR CONTROL FLOW SWITCH	SIM	SIMILAR	ZD	ZONE DAMPER
CDWP	CONDENSER WATER PUMP	ESP	EXTERNAL STATIC PRESSURE	HF	HOSE FAUCET	OCLS	ODOR CONTROL LEVEL SWITCH	SMD	SMOKE DETECTOR		
CENTR	CENTRIFUGAL	ET	EXPANSION TANK	HO	HAND-OFF	OCP	ODOR CONTROL PANEL	SP	STATIC PRESSURE (INCHES OF		
CF	CABINET FAN	EUH	ELECTRIC UNIT HEATER	HOA	HAND-OFF-AUTO	OCPS	ODOR CONTROL PRESSURE SWITCH		WATER)		
CFM	CUBIC FEET PER MIN	EV	EXHAUST VAL	HP	HEAT PUMP, HORSEPO	OCS	ODOR CONTROL SCRUBBE	SPS	STATIC PRESSURE SENSO		

LEGEND

PIPING LEGEND

PLAN	2D SYMBOL	DESCRIPTION
		PIPING ABOVE FLOOR OR GRADE
		PIPING BELOW FLOOR OR GRADE
		PIPE TURNING UP
		PIPE TURNING DOWN

WATER

NPW	COLD WATER (NONPOTABLE)
PW	COLD WATER (POTABLE)
DE	DEIONIZED WATER
DW	DISTILLED WATER
F	FIRE PROTECTION WATER
HWC	HOT WATER CIRCULATING (POTABLE)
NPHW	HOT WATER (NONPOTABLE)
HW	HOT WATER (POTABLE)
PEW	PLANT EFFLUENT WATER
SW	SERVICE WATER
TW	TEMPERED OR BLENDED WATER
TNPW	TEMPERED NONPOTABLE WATER

WASTE

CRW	CHEMICAL RESISTANT WASTE
CRV	CHEMICAL RESISTANT VENT
CWW	CLEAR WATER WASTE
D	INDIRECT DRAIN
SAN	SANITARY DRAIN
ST	STORM DRAIN
PD	SUMP PUMP DISCHARGE
V	VENT

SPECIAL

ACET	ACETYLENE
AR	ARGON
A	COMPRESSED AIR
HE	HELIUM
H	HYDROGEN
ME	METHANE
N	NITROGEN
NO	NITROUS OXIDE
OX	OXYGEN
VAC	VACUUM

FUEL GAS

G	NATURAL GAS
PG	PROPANE GAS

HVAC / ODOR CONTROL

CMR	CHILLED WATER RETURN
CMS	CHILLED WATER SUPPLY
C	CONDENSATE DRAIN
CDWR	CONDENSER WATER RETURN
CDWS	CONDENSER WATER SUPPLY
FA	FOUL AIR
HWR	HEATING WATER RETURN
HWS	HEATING WATER SUPPLY
LPC	LOW PRESSURE CONDENSATE
LPS	LOW PRESSURE STEAM (<15 PSIG)
R	REFRIGERANT
SR	SCRUBBER RECIRCULATION

VALVES

- ANGLE VALVE
- BACKFLOW PREVENTER W/STRAINER (2" AND SMALLER)
- BACKFLOW PREVENTER
- BACKWATER VALVE
- BALL VALVE
- BUTTERFLY VALVE
- CHECK VALVE
- GATE VALVE
- GLOBE VALVE
- PLUG VALVE
- PRESSURE REDUCING VALVE
- THREE WAY VALVE

PIPE FITTINGS

- BLIND FLANGE
- CAP
- REDUCER
- SLEEVE
- TEST PLUG
- UNION
- P-TRAP
- VENT THROUGH ROOF (VTR)

PIPING SPECIALTIES

- AUTOMATIC VALVE STATION
- BASKET STRAINER
- COMBINATION PUMP DISCHARGE VALVE
- FLEXIBLE CONNECTION
- FLOW CONTROL VALVE
- FLOW SENSOR METER
- HOSE FAUCET
- HOSE FAUCET W/ VACUUM BREAKER
- HOSE VALVE W/ HOSE NIPPLE
- AIR VENT
- PRESSURE REDUCING STATION
- PRESSURE RELIEF VALVE
- PRESSURE/TEMPERATURE RELIEF VALVE
- QUICK COUPLING
- ROTAMETER
- SIGHT FLOW INDICATOR
- SUCTION DIFFUSER (SCHEMATIC)
- TRAP PRIMER
- WALL HYDRANT W/ VACUUM BREAKER
- METER
- WYE STRAINER
- WYE STRAINER W/ BLOWOFF
- VACUUM BREAKER

PLUMBING (SCHEMATIC)

- AIR-GAP FITTING
- BELL-UP DRAIN OR FUNNEL RECEPTOR
- FLOOR CLEANOUT
- FLOOR DRAIN
- FLOOR DRAIN W/ FUNNEL

FIRE PROTECTION

- ALARM CHECK VALVE - WET SYSTEM
- DRY PIPE VALVESWITCH
- FIRE DEPARTMENT CONNECTION
- SUPERVISORY (TAMPER) SWITCH

PLUMBING

- BELL-UP DRAIN OR FUNNEL RECEPTOR W/ TRAP
- CLEANOUT (FLOOR)
- CLEANOUT (PIPE)
- BLENDING VALVE
- DOWNSPOUT NOZZLE
- EMERGENCY SHOWER / EYEWASH
- FLOOR DRAIN
- HOSE RACK
- HOSE REEL
- ROOF DRAIN
- SHOWER
- SPLASH BLOCK
- WATER HAMMER ARRESTOR W/ PDI SIZE DESIGNATION

HVAC

- DIFFUSER FOR FLEXIBLE DUCT
- DUCTWORK DIMENSIONS, THE FIRST DIMENSION IS THE SIDE SEEN OR SIDE THE LEADER LINE TOUCHES. SEE GENERAL MECHANICAL NOTES. (30"x20"(L))
- FLEXIBLE CONNECTION
- FLEXIBLE DUCTWORK
- INCLINED RISE (UP) OR DROP (DN) IN RESPECT TO DIRECTION OF AIRFLOW (DN / UP)
- NEGATIVE PRESSURE DUCT
- POSITIVE PRESSURE DUCT
- REGISTER, GRILLE OR DIFFUSER
- ROUND OR FLEXIBLE DUCT TAKEOFF
- ROUND TO SQUARE TRANSITION
- TURNING VANES

CONTROLS AND INSTRUMENTATION

- DIAL TYPE THERMOMETER
- DRAFT GAUG
- ELECTRIC OPERATOR (EXPLOSION PROOF)
- ELECTRIC OPERATOR (MODULATING)
- ELECTRIC OPERATOR (2 POSITION)
- EMERGENCY VENTILATION SWITCH W/ NUMBER
- FLOW SWITCH
- GAUGE ACTIVATOR/ISOLATOR
- HUMIDISTAT W/ NUMBER
- INSTRUMENT TEST OPENING
- LEVEL SWITCH
- PRESSURE DIFFERENTIAL SWITCH W/ NUMBER
- PRESSURE GAUGE W/ SHUTOFF VALVE
- PRESSURE SWITCH
- SMOKE DETECTOR W/ NUMBER
- SOLENOID OPERATOR
- STEM TYPE THERMOMETER
- THERMOSTAT WITH NUMBER
- THERMOSTAT WITH NUMBER
- VACUUM GAUGE W/ SHUTOFF VALVE

AIR INLET AND OUTLET IDENTIFICATION

- SIZE-LENGTH BY WIDTH (INCHES)
- FLEXIBLE DUCT DIAMETER (INCHES, IF USED)
- 24"x10" - 10" SR - 1 - 760
- CFM THRU DEVICE
- DEVICE DESIGNATION
- DEVICE GROUP: R-REGISTER, G-GRILL, D-DIFFUSER
- DEVICE TYPE: S-SUPPLY, E-EXHAUST, R-RETURN, T-TRANSFER

GENERAL MECHANICAL NOTES

1. THIS IS A GENERAL LEGEND AND ABBREVIATION SHEET FOR PLUMBING, FIRE PROTECTION, HVAC AND ODOR CONTROL DRAWINGS. SOME ITEMS CONTAINED ON THIS SHEET MAY NOT BE USED ON THIS SPECIFIC PROJECT.
2. FIRE PROTECTION AND HVAC WORK SHALL BE IN ACCORDANCE WITH THE FOLLOWING APPLICABLE CODES:
   - 2021 INTERNATIONAL BUILDING CODE
   - 2018 ARKANSAS MECHANICAL CODE
   - 2014 ENERGY CODE
3. SEE ARCHITECTURAL AND STRUCTURAL DRAWINGS FOR ALL EQUIPMENT BASE DETAILS.
4. "SCREENED" DELINEATION DENOTES EXISTING AND NEW FACILITIES AND IS FOR REFERENCE ONLY. "LIGHT" LINE DELINEATION DENOTES EXISTING MECHANICAL EQUIPMENT AND SYSTEMS. EXISTING FACILITY AND MECHANICAL SYSTEMS INFORMATION WAS TAKEN FROM PREVIOUS DRAWINGS, CONSTRUCTION RECORDS, DATA, AND FIELD SURVEY INFORMATION. ACTUAL LOCATION, ARRANGEMENT, AND DIMENSIONS SHALL BE FIELD VERIFIED AND WORK INSTALLED TO MEET ACTUAL CONDITIONS AND LOCATIONS ENCOUNTERED. "BOLD" (DARK) DELINEATION IS NEW WORK TO BE CONSTRUCTED UNDER THIS CONTRACT.
5. ALL PIPE AND DUCT PENETRATIONS THROUGH FIRE RESISTANCE RATED ASSEMBLIES SHALL BE PROVIDED WITH FIRESTOP SYSTEMS, EQUIPMENT AND ACCESSORIES TO RESIST THE PASSAGE OF FIRE, SMOKE AND OTHER GASES. THE ORIGINAL FIRE RESISTANCE RATING OF THE ASSEMBLY PENETRATED SHALL BE MAINTAINED FOR ALL TYPES OF PENETRATIONS. SEE ARCHITECTURAL DRAWINGS FOR RATED ASSEMBLY LOCATIONS.
6. METAL ROOF DECKING OR BOTTOM CHORD OF BAR JOISTS SHALL NOT BE USED FOR THE SUPPORT OF EQUIPMENT, PIPING, OR DUCTWORK.
7. ALL HANGERS, BRACKETS, OR BRACES FOR DUCTWORK, EQUIPMENT, AND PIPING ARE NOT INDICATED ON THE DRAWINGS. REFER TO THE SPECIFICATIONS FOR SUPPORT REQUIREMENTS NOT SHOWN ON THE PLANS.
8. OUTSIDE AIR INLETS SHALL BE LOCATED A MINIMUM OF 10' AWAY FROM ANY EXHAUST AIR OR PLUMBING VENT OUTLET.
9. ALL EQUIPMENT, PIPING, AND DUCTWORK FINAL LOCATIONS SHALL BE COORDINATED TO AVOID INTERFERENCES WITH STRUCTURE, OTHER PIPING, EQUIPMENT, DUCTWORK, AND CONDUIT. UNLESS SPECIFICALLY DIMENSIONED, THE PIPE AND DUCTWORK ROUTING SHOWN IS INTENDED TO INDICATE GENERAL LOCATION ONLY. INSTALL DUCTWORK TO ALLOW FOR PIPING AND CONDUIT TO BE ROUTED BEHIND DUCTWORK AGAINST WALLS.
10. ALL PIPING AND DUCTWORK SHALL BE ROUTED AS HIGH AS POSSIBLE WITH A MINIMUM HEIGHT OF 8'-0" ABOVE THE WALKING SURFACE UNLESS OTHERWISE INDICATED BY A CENTERLINE, INVERT, OR BOTTOM OF DUCT ELEVATION.
11. PIPING AND DUCTWORK INSTALLED ABOVE SUSPENDED CEILINGS SHALL BE INSTALLED TO ALLOW A MINIMUM 8 INCH CLEARANCE BETWEEN THE CEILING AND PIPING OR BOTTOM OF DUCT.
12. DUCTWORK SHALL BE FABRICATED, REINFORCED, SUPPORTED AND SEALED FOR OPERATING PRESSURES INDICATED IN THE SCHEDULES FOR THE EQUIPMENT IT SERVES. ALL DUCTWORK SHALL HAVE A MINIMUM SMACNA PRESSURE CLASSIFICATION OF ONE INCH.
13. DUCT SIZES INDICATED ARE CLEAR DIMENSIONS INSIDE THE DUCT OR DUCT LINING. SHEET METAL SIZES ARE LARGER FOR INTERNALLY LINED DUCTWORK.
14. MINIMUM INSULATION THICKNESSES FOR DUCTWORK SHALL BE AS INDICATED IN THE SPECIFICATIONS UNLESS OTHERWISE INDICATED ON THE PLANS WITH A "L" OR "W" DESIGNATION. WHERE AN INSULATION THICKNESS IS INDICATED ON THE DRAWINGS, IT SHALL GOVERN. THE FOLLOWING DENOTES THE DIFFERENT INSULATION THICKNESSES INDICATED ON THE DRAWINGS:
    - L,L1 - 1 INCH INTERNALLY LINED
    - L15 - 1.5 INCH INTERNALLY LINED
    - L2 - 2 INCH INTERNALLY LINED
    - W,W1 - 1 INCH EXTERNALLY WRAPPED
    - W15 - 1.5 INCH EXTERNALLY WRAPPED
    - W2 - 2 INCH EXTERNALLY WRAPPED
15. DUCT CONNECTIONS TO EQUIPMENT, PIPING SIZES TO EQUIPMENT, AND EQUIPMENT SUPPORTS SHALL BE VERIFIED AND ADJUSTED TO MATCH ACTUAL EQUIPMENT FURNISHED.
16. THE LOCATION OF PIPING AND VALVES TO THE AIR HANDLING EQUIPMENT SHALL NOT INTERFERE WITH FILTER REMOVAL OR AIR HANDLING EQUIPMENT SERVICING.
17. CONTROL DAMPER SIZES SHALL MATCH DIMENSIONS OF ASSOCIATED LOUVER UNLESS OTHERWISE INDICATED.
18. INSULATION SHALL BE PROVIDED FOR EQUIPMENT, PIPING, AND DUCT SYSTEMS AS INDICATED IN THE SPECIFICATIONS.
19. FOR ALL BUILDING MECHANICAL PIPING PENETRATIONS THROUGH FLOORS AND WALLS, SEE MECHANICAL DRAWINGS.

BLACK & VEATCH
Black & Veatch Corporation
Kansas City, Missouri

olsson

THIS DOCUMENT WAS ORIGINALLY ISSUED AND SEALED ON JANUARY 24, 2023 BY MICHELE F. ROTH, A LICENSED PROFESSIONAL ENGINEER IN THE STATE OF ARKANSAS, E-17959

BEAVER WATER DISTRICT

WESTERN CORRIDOR PUMP STATION

100% SET

REVISIONS AND RECORD OF ISSUE

DESIGNED:	TVT
DETAILED:	PEM
CHECKED:	DAV
APPROVED:	MFR
DATE:	JANUARY 2023
PROJECT NO.:	405654

PUMP STATION

HVAC

LEGENDS, ABBREVIATIONS, AND GENERAL NOTES

H-00-001

82 OF 159

(SCALE BAR IS 4" AT FULL SCALE) 0 1/2 1 2 3 4

PLOTTED: 1/18/2023 2:57:11 PM
FILE: BIM 360://405654 - BWD Western Corridor Pump Station\405654-42-PUMP STATION.rvt
D11000

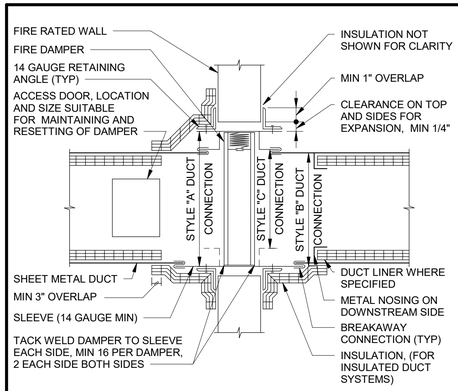

A FIRE DAMPER - VERTICAL

NO SCALE

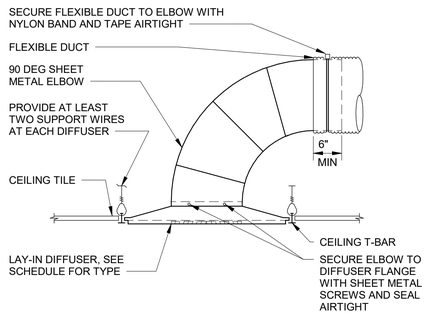

B CEILING DIFFUSER - HORIZONTAL DUCT CONNECTION

NO SCALE

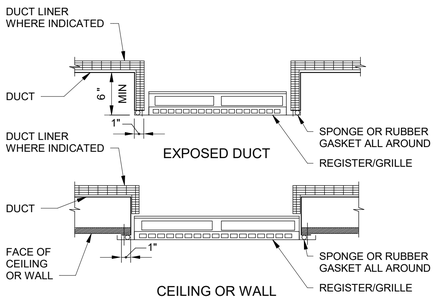

C REGISTER/GRILLE

NO SCALE

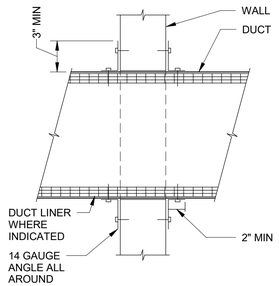

D WALL PENETRATION - INTERIOR

NO SCALE

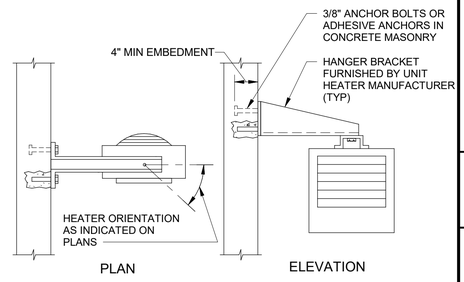

NOTES:
1. MASONRY WALLS SHALL BE SOLIDLY GROUTED 4" MIN, ALL SIDES OF ANCHORS.
2. UNIT HEATER BOTTOM ELEVATION SHALL BE 8 FT ABOVE FINISHED FLOOR UNLESS OTHERWISE INDICATED.

E ELECTRIC UNIT HEATER SUPPORT

NO SCALE

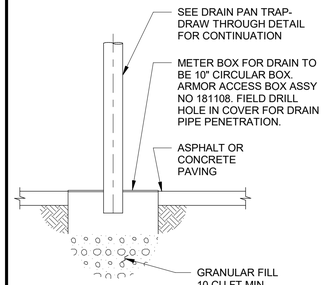

F CONDENSATE DRAIN SUMP

NO SCALE

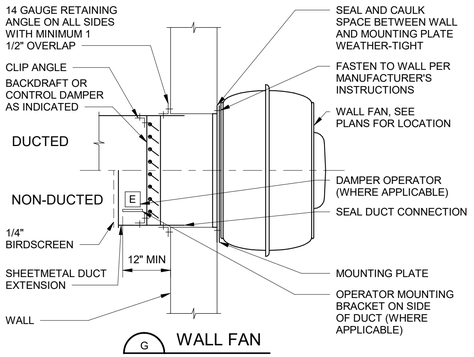

G WALL FAN

NO SCALE

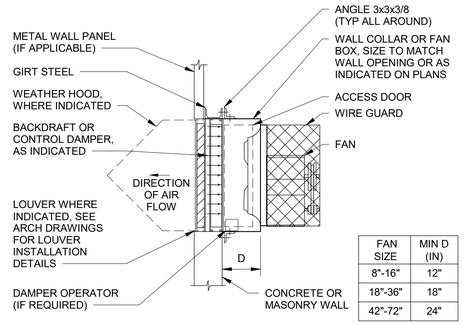

FAN SIZE	MIN D (IN)
8"-16"	12"
18"-36"	18"
42"-72"	24"

H PROPELLER FAN

NO SCALE

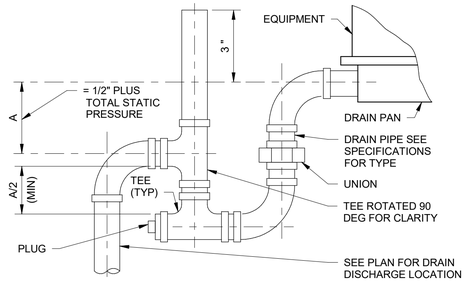

J DRAIN PAN TRAP - DRAW THROUGH

NO SCALE

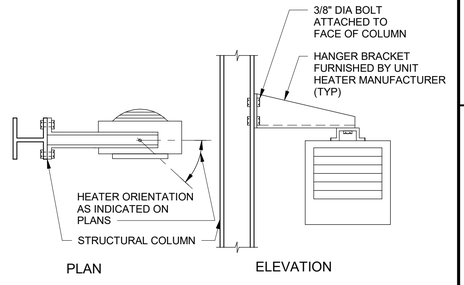

NOTES:
UNIT HEATER BOTTOM ELEVATION SHALL BE 8 FT ABOVE FINISHED FLOOR UNLESS OTHERWISE INDICATED.

K ELECTRIC UNIT HEATER SUPPORT

NO SCALE

HVAC SEQUENCE OF OPERATION

1. GENERAL SYSTEM OPERATIONS.

1.2. SYSTEM INTERLOCKS AND ALARMS

1.2.1. SMOKE DETECTION SYSTEMS

1.2.1.1. SMOKE DETECTION (DUCT MOUNTED DETECTORS). SMOKE DETECTORS SHALL BE LOCATED IN THE DUCT OF EQUIPMENT LISTED BELOW. IN THE EVENT SMOKE IS DETECTED BY A DETECTOR, A SMOKE DETECTED SIGNAL SHALL BE TRANSMITTED TO THE REMOTE TEST STATION AND FIRE ALARM PANEL. A "SMOKE DETECTED" ALARM LIGHT ON THE RESPECTIVE REMOTE TEST STATION SHALL BE ILLUMINATED. THE RESPECTIVE EQUIPMENT AND ANY INTERLOCKED EQUIPMENT SHALL BE DE-ENERGIZED AND OUTSIDE AIR DAMPERS ASSOCIATED WITH THE DE-ENERGIZED EQUIPMENT SHALL CLOSE.

IN THE EVENT A SMOKE DETECTOR MALFUNCTIONS, A MALFUNCTION SIGNAL SHALL BE TRANSMITTED TO THE REMOTE TEST STATION OR FIRE ALARM PANEL, ILLUMINATING A "SMOKE DETECTOR MALFUNCTION" INDICATING LIGHT.

SMOKE DETECTOR	DE-ENERGIZED EQUIPMENT
42-SMD-01	42-AHU-05

2. HEATING SYSTEMS.

2.1. UNIT HEATERS. UNIT HEATERS SHALL BE CONTROLLED BY THEIR RESPECTIVE THERMOSTATS.

2.3. WALL HEATERS. WALL HEATERS SHALL BE CONTROLLED BY THEIR RESPECTIVE THERMOSTATS.

3. VENTILATING/EXHAUST SYSTEMS.

3.1. "ON-OFF" EQUIPMENT CONTROL. EQUIPMENT INDICATED FOR "ON-OFF" CONTROL SHALL EACH BE CONTROLLED BY THE RESPECTIVE BATTERY CABINET PROVIDED UNDER ELECTRICAL. THE SWITCH LOCATION SHALL BE AS INDICATED BELOW. THE BATTERY CABINET FAN IS ENERGIZED WHEN A SIGNAL IS SENT FROM THE BATTERY CABINET BUILT-IN THERMOSTAT OR HYDROGEN SENSOR. BEFORE THE FAN CAN OPERATE, THE CONTROL DAMPER(S) SHALL BE PROVEN OPEN. WHEN THE BATTERY CABINET FAN IS DE-ENERGIZED, THE CONTROL DAMPER(S) SHALL RETURN TO THE NORMAL POSITION.

EQUIPMENT	SWITCH LOCATION	CONTROL DAMPER(S)
42-LCP-102	BATTERY CABINET	42-CD-11
42-LCP-103	BATTERY CABINET	42-CD-12
43-LCP-101	BATTERY CABINET	43-CD-01
43-LCP-104	BATTERY CABINET	43-CD-01

3.2. "ON-OFF-AUTO" EQUIPMENT CONTROL. EQUIPMENT INDICATED FOR "ON-OFF-AUTO" CONTROL SHALL EACH BE CONTROLLED BY AN INDIVIDUAL "ON-OFF-AUTO" FAN SELECTOR SWITCH. THE SWITCH LOCATION SHALL BE AS INDICATED BELOW. WHEN THE SWITCH IS PLACED IN THE "AUTO" POSITION, THE FAN SHALL BE INTERLOCKED AND CONTROLLED BY THE FAN INTERLOCK. WHEN THE SWITCH IS PLACED IN THE "ON" POSITION, THE FAN SHALL BE ENERGIZED. BEFORE A FAN CAN OPERATE, THE CONTROL DAMPER(S) SHALL BE PROVEN OPEN. WHERE THE FAN IS INTERLOCKED WITH ANOTHER FAN OR EQUIPMENT WITH A FAN, THE FANS SHALL BE ENERGIZED SIMULTANEOUSLY AFTER ALL ASSOCIATED CONTROL DAMPERS ARE PROVEN OPEN. WHEN THE FAN IS DE-ENERGIZED, THE CONTROL DAMPER(S) SHALL RETURN TO THE NORMALLY CLOSED POSITION UNLESS OTHERWISE INDICATED.

EQUIPMENT	SWITCH LOCATION	FAN INTERLOCK	CONTROL DAMPER(S)
42-EF-05	STARTER	42-T-05	42-CD-10, 42-CD-09
42-EF-07	STARTER	42-T-08	42-CD-15, 42-CD-16

3.2.1 "ON-OFF-AUTO" EQUIPMENT CONTROL IN OCCUPIED AREAS. EQUIPMENT INDICATED FOR "ON-OFF-AUTO" CONTROL SHALL EACH BE CONTROLLED BY AN INDIVIDUAL "ON-OFF-AUTO" FAN SELECTOR SWITCH. THE SWITCH LOCATION SHALL BE AS INDICATED BELOW. WHEN THE SWITCH IS PLACED IN THE "AUTO" POSITION, THE FAN SHALL BE INTERLOCKED AND CONTROLLED BY THE FAN INTERLOCK. WHEN THE SWITCH IS PLACED IN THE "ON" POSITION, THE FAN SHALL BE ENERGIZED. BEFORE A FAN CAN OPERATE, THE CONTROL DAMPER(S) SHALL BE PROVEN OPEN. WHERE THE FAN IS INTERLOCKED WITH ANOTHER FAN OR EQUIPMENT WITH A FAN, THE FANS SHALL BE ENERGIZED SIMULTANEOUSLY AFTER ALL ASSOCIATED CONTROL DAMPERS ARE PROVEN OPEN. WHEN THE FAN IS DE-ENERGIZED, THE CONTROL DAMPER(S) SHALL RETURN TO THE NORMALLY CLOSED POSITION UNLESS OTHERWISE INDICATED.

IN THE OCCUPIED MODE OF OPERATION THE AHU SHALL COMMAND THE EXHAUST TO ENERGIZE. BEFORE A FAN CAN OPERATE, THE CONTROL DAMPER(S) SHALL BE PROVEN OPEN. WHERE THE FAN IS INTERLOCKED WITH ANOTHER FAN OR EQUIPMENT WITH A FAN, THE FANS SHALL BE ENERGIZED SIMULTANEOUSLY AFTER ALL ASSOCIATED CONTROL DAMPERS ARE PROVEN OPEN.

IN THE UNOCCUPIED MODE OF OPERATION THE AHU SHALL COMMAND THE EXHAUST TO DE-ENERGIZE. WHEN THE FAN IS DE-ENERGIZED, THE CONTROL DAMPER(S) SHALL RETURN TO THE NORMALLY CLOSED POSITION UNLESS OTHERWISE INDICATED.

EQUIPMENT	SWITCH LOCATION	FAN INTERLOCK	CONTROL DAMPER(S)
42-EF-06	STARTER	42-AHU-05	42-CD-13, 42-CD-14

3.2.2. MULTIPLE LEAD/LAG FAN SYSTEM.THE EXHAUST FANS SERVING THE PUMP ROOM 111 SHALL BE PROVIDED WITH A TEMPERATURE CONTROLLER AND ROOM TEMPERATURE SENSOR THAT SHALL CONTROL THE FANS WHEN THE SWITCH IS IN THE "AUTO" POSITION. THE LEAD FAN MOTOR SHALL BE ENERGIZED AND OPERATE WHEN THE AIR TEMPERATURE IS ABOVE THE CHANGEOVER SETPOINT AS DETECTED BY THE ROOM TEMPERATURE SENSOR. A SIGNAL SHALL BE SENT FROM THE TEMPERATURE SENSOR TO THE TEMPERAUTRE CONTROLLER SIGNALLING THE RESPECTIVE EXHAUST FAN TO ENERGIZE. AS THE ROOM CONTINUES TO RISE IN TEMPERATURE AS DETECTED BY THE ROOM TEMPERATURE SENSOR EVERY 3 DEGREES ANOTHER FAN WILL BE CALLED TO ENERGIZE BY THE TEMPERATURE CONTROLLER RESPECTIVELY. AS THE TEMPERATURE DROPS 3 DEGREES BELOW THE THRESHOLD AS SENSED BY THE ROOM TEMPERATURE SENSOR THE TEMPERATURE CONTROLLER WILL DE-ENERGIZE THE FANS RESPECTIVELY TO MAINTAIN THE ROOM TEMPERATURE SETPOINT. THE TEMPERATURE CONTROLLER SHALL BE USED TO ALTERNATE THE LEAD-LAG DESIGNATION OF THE FOUR UNITS ON A WEEKLY (ADJUSTABLE) BASIS BASED ON OVERALL RUN TIME IN LEAD MODE.

EQUIPMENT	SWITCH LOCATION	FAN INTERLOCK	CONTROL DAMPER(S)
42-EF-01	MCC/TEMP CONTROLLER	42-T-06	42-CD-01, 42-CD-08
42-EF-02	MCC/TEMP CONTROLLER	42-T-06	42-CD-02, 42-CD-07
42-EF-03	MCC/TEMP CONTROLLER	42-T-06	42-CD-03, 42-CD-06
42-EF-04	MCC/TEMP CONTROLLER	42-T-06	42-CD-04, 42-CD-05

4. AIR CONDITIONING SYSTEMS.

4.1. SINGLE ZONE CONSTANT VOLUME SYSTEMS. SINGLE ZONE CONSTANT VOLUME SYSTEMS SHALL BE CONTROLLED BY THEIR RESPECTIVE THERMOSTAT. SYSTEM OPERATION SHALL BE CONTROLLED BY AN "OFF--AUTO-COOL" (AUTOMATIC CHANGEOVER, PROGRAMMABLE) SYSTEM SWITCH AND AN "AUTO-ON" FAN SWITCH LOCATED ON THE THERMOSTAT SUB-BASE. WHEN THE FAN SWITCH IS PLACED IN THE "AUTO" POSITION, THE RESPECTIVE EQUIPMENT FAN SHALL BE ENERGIZED UPON A CALL FOR COOLING AS REQUIRED TO MAINTAIN THE DESIRED ROOM TEMPERATURE. WHEN THE FAN SWITCH IS PLACED IN THE "ON" POSITION, THE FAN SHALL BE ENERGIZED.

4.1.1. THE SYSTEM SHALL CONSIST OF TWO 50% SPLIT SYSTEMS OPERATING IN A LEAD-LAG CONFIGURATION. UPON AN INCREASE IN SPACE TEMPERATURE ABOVE THE COOLING SETPOINT AS SENSED BY THE ROOM TEMPERATURE SENSOR, THE LEAD UNIT SHALL ENERGIZE AND OPERATE TO MAINTAIN THE SPACE TEMPERATURE SETPOINT. UPON A FURTHER INCREASE IN SPACE TEMPERATURE ABOVE THE COOLING SETPOINT, THE LAG UNIT SHALL ENERGIZE. THE LEAD-LAG CONTROLLER PROVIDED WITH THE UNITS SHALL BE USED TO ALTERNATE THE LEAD-LAG DESIGNATION OF THE UNITS ON A MONTHLY (ADJUSTABLE) BASIS BASED ON OVERALL RUN TIME IN LEAD MODE.

EQUIPMENT	ROOM THERMOSTAT
42-AHU-01/42-CU-01	42-T-01
42-AHU-02/42-CU-02	42-T-01
42-AHU-03/42-CU-03	42-T-02
42-AHU-04/42-CU-04	42-T-02
42-FC-01/42-CU-06	42-T-03
42-FC-02/42-CU-07	42-T-04
43-FC-01/43-CU-01	43-T-01
43-FC-02/43-CU-02	43-T-02

5. VARIABLE VOLUME SYSTEMS SERVING OCCUPIED SPACES, 42-AHU-05/42-CU-05. VARIABLE VOLUME SYSTEMS SHALL BE CONTROLLED BY THEIR RESPECTIVE THERMOSTAT, 42-T-07 AND HUMIDISTAT 42-H-01. SYSTEM OPERATION SHALL BE CONTROLLED BY AN "OFF-HEAT-AUTO-COOL" (AUTOMATIC CHANGEOVER, PROGRAMMABLE) SYSTEM SWITCH AND AN "AUTO-ON" FAN SWITCH LOCATED ON THE THERMOSTAT SUB-BASE. WHEN THE FAN SWITCH IS PLACED IN THE "AUTO" POSITION, THE RESPECTIVE EQUIPMENT FAN SHALL BE ENERGIZED UPON A CALL FOR COOLING OR HEATING AS REQUIRED TO MAINTAIN THE DESIRED ROOM TEMPERATURE. WHEN THE FAN SWITCH IS PLACED IN THE "ON" POSITION, THE FAN SHALL BE ENERGIZED. BEFORE THE FAN CAN OPERATE, THE CONTROL DAMPER(S) SHALL BE PROVEN OPEN. WHEN THE FAN IS DE-ENERGIZED, THE CONTROL DAMPER(S) SHALL CLOSE.

EACH SYSTEM SHALL BE IN THE OCCUPIED MODE WHEN THE AREA SERVED IS OCCUPIED. IN THIS MODE, THE VFD FOR 42-AHU-05 SHALL OPERATE CONTINUOUSLY AND MODULATE THE FAN SPEED AND COMPRESSORS TO MAINTAIN THE SETPOINT AND THE OUTSIDE AIR CONTROLS SHALL BE SET AT THE MINIMUM OUTSIDE AIR POSITION . WHEN THE AREA SERVED IS UNOCCUPIED, THE FAN SHALL BE DE-ENERGIZED AND ONLY OPERATE WHEN HEATING OR COOLING IS REQUIRED TO MAINTAIN THE SETBACK TEMPERATURES. WHEN THE THERMOSTAT IS CAPABLE OF PROVIDING AUTOMATIC OCCUPIED/UNOCCUPIED CONTROL, THE FAN SHALL OPERATE AS DESCRIBED IN THE UNOCCUPIED – NIGHT SETBACK CONTROL PARAGRAPH. IN ALL CASES, THE FAN SHALL OPERATE CONTINUOUSLY WHEN THE SPACE IS OCCUPIED AND CYCLE ON AND OFF TO MEET THE HEATING OR COOLING LOADS WHEN THE SPACE IS UNOCCUPIED.

5.1 UNOCCUPIED – NIGHT SETBACK CONTROL. THE SYSTEM SHALL BE IN THE UNOCCUPIED MODE WHEN THE BUILDING IS SCHEDULED TO BE UNOCCUPIED THROUGH THE SYSTEM TIME CLOCK. IN THIS MODE, THE OUTSIDE AIR AND EXHAUST AIR SHALL BE CLOSED AND THE FAN SHALL BE CYCLED BY THE SYSTEM NIGHT SETBACK THERMOSTAT AND HUMIDISTAT TO MAINTAIN THE SETBACK TEMPERATURE SETPOINT AND HUMIDITY UNDER A 60F DEW POINT. IN UNOCCUPIED MODE THE VFD FOR 42-AHU-05 WILL REDUCE THE FAN SPEED AND COMPRESSORS TO THE LOW RATE AMOUNT AS SHOWN ON THE SCHEDULE.

THE SYSTEM SHALL OPERATE IN THE HEATING UNOCCUPIED – NIGHT SETBACK MODE WHEN THE TEMPERATURE FALLS BELOW THE HEATING NIGHT SETBACK THERMOSTAT SETPOINT. IN THIS MODE, THE AIR HANDLING SYSTEM AND HEATING SHALL CYCLE TO MAINTAIN THE SETBACK TEMPERATURE.

THE SYSTEM SHALL OPERATE IN THE COOLING UNOCCUPIED – NIGHT SETBACK MODE WHEN THE TEMPERATURE RISES ABOVE THE COOLING NIGHT SETBACK THERMOSTAT SETPOINT. IN THIS MODE, THE AIR HANDLING SYSTEM AND COMPRESSORS SHALL CYCLE TO MAINTAIN THE SETBACK TEMPERATURE.

WHEN THE UNOCCUPIED MODE IS OVERRIDDEN ON THERMOSTATS FURNISHED WITH OCCUPIED/UNOCCUPIED OVERRIDE, THE ZONE OR SYSTEM SHALL RETURN TO ITS OCCUPIED OPERATING MODE. AFTER THE PRESELECTED TIME PERIOD HAS ELAPSED FOR THE SETBACK OVERRIDE, THE SYSTEM SHALL RETURN TO THE UNOCCUPIED CONTROL.

EQUIPMENT	ROOM THERMOSTAT/HUMIDISTAT
42-AHU-05/42-CU-05	42-T-07/42-H-07

6. THERMOSTAT SETPOINTS

6.1. THERMOSTAT SETPOINTS SHALL BE AS INDICATED BELOW, UNLESS THE SETPOINT HAS BEEN DESCRIBED PREVIOUSLY IN THIS SEQUENCE OF OPERATIONS.

HEATERS	- 54 F
OCCUPIED AREAS (COOLING)	- 78 F
OCCUPIED AREAS (HEATING)	- 72 F
OCCUPIED AREAS (HUMIDITY)	- 50%
VENTILATING EQUIPMENT WORKSHOP	- 90 F
VENTILATING EQUIPMENT PUMP ROOM	- STAGE 1 90 F
PROGRAMABLE TEMPERATURE CONTROLLER	- STAGE 2 93 F
	- STAGE 3 96 F
	- STAGE 4 99F
PROGRAMMABLE THERMOSTATS (ELECTRICAL SPACES)	- 85 F COOLING

BLACK & VEATCH
Black & Veatch Corporation
Kansas City, Missouri

olsson

THIS DOCUMENT WAS ORIGINALLY ISSUED AND SEALED ON JANUARY 24, 2023 BY MICHELE F. ROTH, A LICENSED PROFESSIONAL ENGINEER IN THE STATE OF ARKANSAS, E-17959

BEAVER WATER DISTRICT

WESTERN CORRIDOR PUMP STATION

100% SET

REVISIONS AND RECORD OF ISSUE

DESIGNED:	TVT
DETAILED:	PEM
CHECKED:	DAV
APPROVED:	MFR
DATE:	JANUARY 2023
PROJECT NO.:	405654

GENERAL

HVAC

DETAILS & SEQUENCE OF OPERATION

H-00-501

PLOTTED: 1/18/2023 2:53:39 PM
FILE: BIM 360:/405654 - BWD Western Corridor Pump Station\405654-00-GENERAL.rvt
D11000

(SCALE BAR IS 4" AT FULL SCALE) 0 1/2 1 2 3 4

AIR DEVICE SCHEDULE

SYMBOL	MANUFACTURER	MODEL	FRAME/BORDER	MODULE SIZE	MATERIAL	FINISH	DAMPER TYPE	NOTES
ED-1	PRICE	PDR						
RD-1	PRICE	PDR	LAY-IN	---	ALUMINUM	ALUM PRIME COAT	OPPOSED BLADE	1,2
RR-1	PRICE	22DAL	SURFACE MOUNT	---	ALUMINUM	ALUM PRIME COAT	OPPOSED BLADE	1
SD-1	PRICE	PDS	LAY-IN	---	ALUMINUM	ALUM PRIME COAT	OPPOSED BLADE	1,2
SR-1	PRICE	22DAL						

AIR HANDLING UNIT (PACKAGED) SCHEDULE

UNIT NUMBER	LOCATION	MANUFACTURER	MODEL	AIRFLOW (CFM)	ESP (IN WC)	ORIENTATION	INDOOR FAN MOTOR HP	DRIVE	POWER SUPPLY		COOLING				HEATING			NOTES
											EAT		CAPACITY (BTUH)					
									VOLTS	PHASE	(FDB)	(FWB)	SENSIBLE	TOTAL	EAT (FDB)	TYPE	CAPACITY (BTUH OR (KW))	
42-AHU-1	MEDIUM VOLTAGE ELECTRICAL ROOM 113	TRANE	TWE	6400	0.5	VERTICAL	3	BELT	480	3	85	63.2	193500	207000	---	---	---	1,2
42-AHU-2	MEDIUM VOLTAGE ELECTRICAL ROOM 113	TRANE	TWE	6400	0.625	VERTICAL	3	BELT	480	3	85	63.2	193500	207000	---	---	---	1,2
42-AHU-3	MEDIUM VOLTAGE ELECTRICAL ROOM 114	TRANE	TWE	5000	0.625	VERTICAL	3	BELT	480	3	85	63.2	163000	176500	---	---	---	1,2
42-AHU-4	MEDIUM VOLTAGE ELECTRICAL ROOM 114	TRANE	TWE	5000	0.625	VERTICAL	3	BELT	480	3	85	63.2	163000	176500	---	---	---	1,2
42-AHU-05	MECHANICAL ROOM 108	TRANE	TWE	2400/1750	1	VERTICAL	2	BELT	480	3	82.1	64.8	60500/49000	82500/52500	---	ELECTRIC	34.88	3

CONDENSING UNIT SCHEDULE

UNIT NUMBER	LOCATION	MANUFACTURER	MODEL	COOLING				HEATING OUTPUT CAPACITY [HEAT PUMP] (BTUH)	POWER SUPPLY		MINIMUM CIRCUIT AMPACITY	ARI MINIMUM EFFICIENCY	MATCHED WITH INDOOR UNIT	APPROX WEIGHT (LBS)	NOTES
				CAPACITY (BTUH)	MIMIMUM CAPACITY STEPS	SUCTION TEMPERATURE (F)			VOLTS	PHASE					
						MINIMUM	MAXIMUM								
42-CU-01	MEDIUM VOLTAGE ELECTRICAL ROOM 113	TRANE	TTA	207000	2			---	480	3	40	11 SEER	42-AHU-01	807	1,2
42-CU-02	MEDIUM VOLTAGE ELECTRICAL ROOM 113	TRANE	TTA	207000	2			---	480	3	40	11 SEER	42-AHU-02	807	1,2
42-CU-03	MEDIUM VOLTAGE ELECTRICAL ROOM 114	TRANE	TTA	176500	2			---	480	3	34	11 SEER	42-AHU-03	807	1,2
42-CU-04	MEDIUM VOLTAGE ELECTRICAL ROOM 114	TRANE	TTA	176500	2			---	480	3	34	11 SEER	42-AHU-04	807	1,2
42-CU-05	MECHANICAL ROOM 108	TRANE	TTA	82500/52500	2			---	480	3	15	11 SEER	42-AHU-05	315	1,2,3
42-CU-06	LOW VOLTAGE ELECTRICAL ROOM 110	TRANE/MITSUBISHI	TRUYA	22000	1			---	208	1	19	13 SEER	42-FC-01	115	1,2
42-CU-07	LOW VOLTAGE ELECTRICAL ROOM 110	TRANE/MITSUBISHI	TRUYA	22000	1			---	208	1	19	13 SEER	42-FC-02	115	1,2
43-CU-01	ELECTRICAL ROOM 101	TRANE/MITSUBISHI	TRUYA	35000	1			---	208	1	25	13 SEER	43-FC-01	243	1,2
43-CU-02	ELECTRICAL ROOM 101	TRANE/MITSUBISHI	TRUYA	35000	1			---	208	1	25	13 SEER	43-FC-02	243	1,2

FAN SCHEDULE

UNIT NUMBER	LOCATION	MANUFACTURER	MODEL	FAN TYPE	AIRFLOW (CFM)	ESP (IN WC)	BRAKE HP	MOTOR HP	POWER SUPPLY		MINIMUM WHEEL DIAMETER (IN)	WHEEL TYPE	DRIVE	FILTER DATA		VIBRATION ISOLATION	APPROX WEIGHT (LBS)	NOTES
									VOLTS	PHASE				TYPE	THICKNESS (IN)			
42-EF-01	PUMP ROOM 112	GREENHECK	AER	PF	13625	0.25	1.05	3	480	3	48	P	DIRECT	---	---	---	275	1
42-EF-02	PUMP ROOM 112	GREENHECK	AER	PF	13625	0.25	1.05	3	480	3	48	P	DIRECT	---	---	---	275	1
42-EF-03	PUMP ROOM 112	GREENHECK	AER	PF	13625	0.25	1.05	3	480	3	48	P	DIRECT	---	---	---	275	1
42-EF-04	PUMP ROOM 112	GREENHECK	AER	PF	13625	0.25	1.05	3	480	3	48	P	DIRECT	---	---	---	275	1
42-EF-05	WORKSHOP 111	GREENHECK	CUE	WF	1000	0.25	0.11	1/4	120	1	13	C	DIRECT	---	---	---	75	1
42-EF-06	ADMINISTRATION SPACE	GREENHECK	CSP	CF	650	0.5	0.19	1/3	120	1	7.75	C	DIRECT	---	---	---	35	1
42-EF-07	HALL 112	GREENHECK	AER	PF	325	0.25	0.04	1/4	120	1	20	P	DIRECT	---	---	---	60	1

FAN COIL UNIT SCHEDULE

UNIT NUMBER	LOCATION	MANUFACTURER	MODEL	AIRFLOW (CFM)	AIR PD (IN WC)	EAT		LAT (FDB)	CAPACITY (BTUH)		EWT (F)	WATER FLOW (GPM)	WATER PD (FT)	MOTOR HP	POWER SUPPLY		APPROX WEIGHT (LBS)	NOTES
						(FDB)	(FWB)		SENSIBLE	TOTAL					VOLTS	PHASE		
42-FC-01	LOW VOLTAGE ELECTRICAL ROOM 110	TRANE/MITSUBISHI	TPLA	675	0.375	85	63.2	55.5	22000	22000	---	---	---	---	208	1	75	---
42-FC-02	LOW VOLTAGE ELECTRICAL ROOM 110	TRANE/MITSUBISHI	TPLA	675	0.375	85	63.2	55.5	22000	22000	---	---	---	---	208	1	75	---
43-FC-01	ELECTRICAL ROOM 101	TRANE/MITSUBISHI	TPEADA	1100	0.375	85	63.2	56.5	34000	35000	---	---	---	---	208	1	100	1
43-FC-02	ELECTRICAL ROOM 101	TRANE/MITSUBISHI	TPEADA	1100	0.375	85	63.2	56.5	34000	35000	---	---	---	---	208	1	100	1

HEATER SCHEDULE

UNIT NUMBER	LOCATION	MANUFACTURER	MODEL	TYPE	UNIT ORIENTATION	EAT (F)	EWT (F)	AIR FLOW (CFM)	AIR PD (IN WC)	OUTPUT CAPACITY		WATER FLOW (GPM)	WATER PD (FT)	MOTOR HP	POWER SUPPLY		APPROX WEIGHT (LBS)	NOTES
										(BTUH)	(KW)				VOLTS	PHASE		
42-EUH-01	PUMP ROOM 112	CHROMALOX	LUH	EUHHD	HORIZONTAL	60	---	850	---	---	7.5	---	---	1/15	480	3	50	1A
42-EUH-02	PUMP ROOM 112	CHROMALOX	LUH	EUHHD	HORIZONTAL	60	---	850	---	---	7.5	---	---	1/15	480	3	50	1A
42-EUH-03	PUMP ROOM 112	CHROMALOX	LUH	EUHHD	HORIZONTAL	60	---	850	---	---	7.5	---	---	1/15	480	3	50	1A
42-EUH-04	PUMP ROOM 112	CHROMALOX	LUH	EUHHD	HORIZONTAL	60	---	850	---	---	7.5	---	---	1/15	480	3	50	1A
42-EUH-05	PUMP ROOM 112	CHROMALOX	LUH	EUHHD	HORIZONTAL	60	---	850	---	---	7.5	---	---	1/15	480	3	50	1A
42-EUH-06	PUMP ROOM 112	CHROMALOX	LUH	EUHHD	HORIZONTAL	60	---	850	---	---	7.5	---	---	1/15	480	3	50	1A
42-EUH-07	PUMP ROOM 112	CHROMALOX	LUH	EUHHD	HORIZONTAL	60	---	850	---	---	7.5	---	---	1/15	480	3	50	1A
42-EUH-08	PUMP ROOM 112	CHROMALOX	LUH	EUHHD	HORIZONTAL	60	---	850	---	---	7.5	---	---	1/15	480	3	50	1A
42-EUH-09	PUMP ROOM 112	CHROMALOX	LUH	EUHHD	HORIZONTAL	60	---	850	---	---	7.5	---	---	1/15	480	3	50	1A
42-EUH-10	PUMP ROOM 112	CHROMALOX	LUH	EUHHD	HORIZONTAL	60	---	850	---	---	7.5	---	---	1/15	480	3	50	1A
42-EUH-11	PUMP ROOM 112	CHROMALOX	LUH	EUHHD	HORIZONTAL	60	---	850	---	---	7.5	---	---	1/15	480	3	50	1B
42-EUH-12	PUMP ROOM 112	CHROMALOX	LUH	EUHHD	HORIZONTAL	60	---	850	---	---	7.5	---	---	1/15	480	3	50	1B
42-EUH-13	WORKSHOP 111	CHROMALOX	LUH	EUHHD	HORIZONTAL	60	---	380	---	---	5	---	---	1/35	480	3	35	1A
42-EUH-14	WORKSHOP 111	CHROMALOX	LUH	EUHHD	HORIZONTAL	60	---	380	---	---	5	---	---	1/35	480	3	35	1A
42-EUH-15	MEDIUM VOLTAGE ELECTRICAL ROOM 113	CHROMALOX	LUH	EUHHD	HORIZONTAL	60	---	850	---	---	5	---	---	1/35	480	3	50	1A
42-EUH-16	MEDIUM VOLTAGE ELECTRICAL ROOM 113	CHROMALOX	LUH	EUHHD	HORIZONTAL	60	---	850	---	---	5	---	---	1/35	480	3	50	1A
42-EUH-17	MEDIUM VOLTAGE ELECTRICAL ROOM 114	CHROMALOX	LUH	EUHHD	HORIZONTAL	60	---	850	---	---	5	---	---	1/35	480	3	50	1A
42-EUH-18	MEDIUM VOLTAGE ELECTRICAL ROOM 114	CHROMALOX	LUH	EUHHD	HORIZONTAL	60	---	850	---	---	5	---	---	1/35	480	3	50	1A
42-WH-01	LOW VOLTAGE ELECTRICAL ROOM 111	INDEECO	WAI	WH	HORIZONTAL	60	---	160	---	---	2	---	---	---	208	1	25	1
42-WH-02	HALLWAY 113	INDEECO	WAI	WH	HORIZONTAL	72	---	160	---	---	3	---	---	---	480	3	35	1
42-WH-03	MECHANICAL ROOM 108	INDEECO	WAI	WH	HORIZONTAL	72	---	160	---	---	2	---	---	---	208	1	24	1
42-WH-04	HALLWAY 101	INDEECO	WAI	WH	HORIZONTAL	72	---	160	---	---	3	---	---	---	480	3	35	1
42-WH-05	WOMEN'S RESTROOM 102	INDEECO	WAI	WH	HORIZONTAL	72	---	160	---	---	1.5	---	---	---	208	1	24	1
42-WH-06	MEN'S RESTROOM 103	INDEECO	WAI	WH	HORIZONTAL	72	---	160	---	---	1.5	---	---	---	208	1	24	1
42-WH-07	OFFICE/CONFERENCE ROOM 104	INDEECO	WAI	WH	HORIZONTAL	72	---	160	---	---	2	---	---	---	208	1	24	1
43-EUH-01	ELECTRICAL ROOM 101	CHROMALOX	LUH	EUHHD	HORIZONTAL	60	---	850	---	---	5	---	---	1/35	480	3	50	1A
43-EUH-02	ELECTRICAL ROOM 101	CHROMALOX	LUH	EUHHD	HORIZONTAL	60	---	850	---	---	5	---	---	1/35	480	3	50	1A
43-EUH-03	ELECTRICAL ROOM 101	CHROMALOX	LUH	EUHHD	HORIZONTAL	60	---	850	---	---	5	---	---	1/35	480	3	50	1A
43-EUH-04	ELECTRICAL ROOM 101	CHROMALOX	LUH	EUHHD	HORIZONTAL	60	---	850	---	---	5	---	---	1/35	480	3	50	1A

SCHEDULE NOTES

AIR DEVICE SCHEDULE:
ACCESSORIES: NONE

NOTES:
1. SEE DRAWINGS FOR DEVICE LENGTH, WIDTH AND SUPPLY PATTERN.
2. ALL DIFFUSER CORE STYLES ARE 4-WAY UNLESS OTHERWISE INDICATED ON THE PLAN.

AIR HANDLING UNIT (PACKAGED) SCHEDULE:
ACCESSORIES: NONE

CAPACITY NOTE: CAPACITIES LISTED IN PARENTHESES ARE IN UNITS OF "KW". CAPACITIES LISTED WITHOUT PARENTHESES ARE IN UNITS OF "BTUH".

NOTES:
1. PROVIDE RETURN GRILLE
2. PROVIDE LEAD/LAG CONTROLLER
3. VARIABLE FREQUENCY DRIVE FAN FOR CAPACITY MODULATION

CONDENSING UNIT SCHEDULE:
ACCESSORIES: NONE

OUTDOOR COIL ENTERING AIR TEMPERATURE:
COOLING - 98 F DESIGN/50 F MIN

NOTES:
1. LOW AMBIENT KIT
2. HAIL GUARDS
3. VARIABLE FREQUENCY DRIVE COMPRESSORS FOR CAPACITY MODULATION

FAN SCHEDULE:
ACCESSORIES: NONE

FAN TYPE ABBREVIATIONS:
CF - CABINET FAN
PF - PROPELLER FAN
WF - WALL FAN

WHEEL TYPE ABBREVIATIONS:
C - CENTRIFUGAL
P - PROPELLER

NOTES:
1. WALL MOUNTING KIT

FAN COIL SCHEDULE:
ACCESSORIES: NONE

NOTES:
1. PROVIDE RETURN GRILLE

HEATER SCHEDULE:
ACCESSORIES: NONE

TYPE ABBREVIATIONS:
EUHHD - HEAVY DUTY ELECTRIC UNIT HEATER
WH - WALL HEATER

NOTES:
1. PROVIDE SURFACE MOUNT KIT FOR WALL HEATER
2. WALL MOUNTING BRACKET A) WALL B) COLUMN

BLACK & VEATCH
Black & Veatch Corporation
Kansas City, Missouri

olsson

THIS DOCUMENT WAS ORIGINALLY ISSUED AND SEALED ON JANUARY 24, 2023 BY MICHELE F. ROTH, A LICENSED PROFESSIONAL ENGINEER IN THE STATE OF ARKANSAS, E-17959

BEAVER WATER DISTRICT

WESTERN CORRIDOR PUMP STATION

100% SET

REVISIONS AND RECORD OF ISSUE

DESIGNED:	TVT
DETAILED:	PEM
CHECKED:	DAV
APPROVED:	MFR
DATE:	JANUARY 2023
PROJECT NO.:	405654

GENERAL

HVAC

SCHEDULES

H-00-601

(SCALE BAR IS 4" AT FULL SCALE) 0 1/2 1 2 3 4

PLOTTED: 1/18/2023 2:53:39 PM
FILE: BIM 360://405654 - BWD Western Corridor Pump Station/405654-00-GENERAL.rvt
D1000

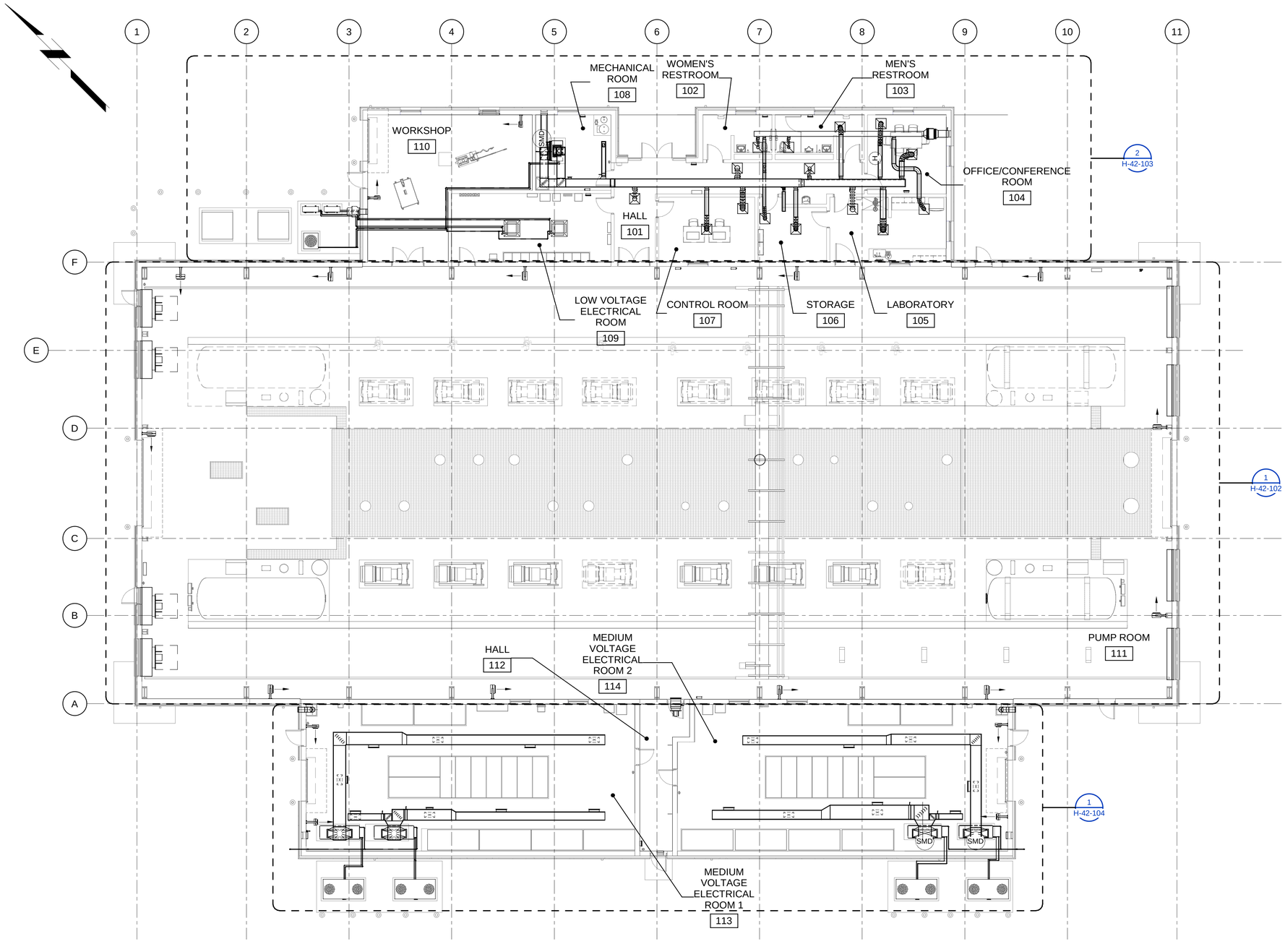

OVERALL PLAN

3/32" = 1'-0"

12" 8" 4" 0' 10' 20'

3/32" = 1'-0"

(SCALE BAR IS 4" AT FULL SCALE) 0 1/2 1 2 3 4

PLOTTED: 1/20/2023 7:30:29 AM
FILE: BIM 360://405654 - BWD Western Corridor Pump Station/405654-42-PUMP STATION.rvt
D11000

BLACK & VEATCH

Black & Veatch Corporation
Kansas City, Missouri

olsson

THIS DOCUMENT WAS ORIGINALLY ISSUED AND SEALED ON JANUARY 24, 2023 BY MICHELE F. ROTH, A LICENSED PROFESSIONAL ENGINEER IN THE STATE OF ARKANSAS, E-17959

BEAVER WATER DISTRICT

WESTERN CORRIDOR PUMP STATION

100% SET

REVISIONS AND RECORD OF ISSUE

DESIGNED:	TVT
DETAILED:	PEM
CHECKED:	DAV
APPROVED:	MFR
DATE:	JANUARY 24, 2023
PROJECT NO.:	405654

PUMP STATION

HVAC

OVERALL PLAN

H-42-101

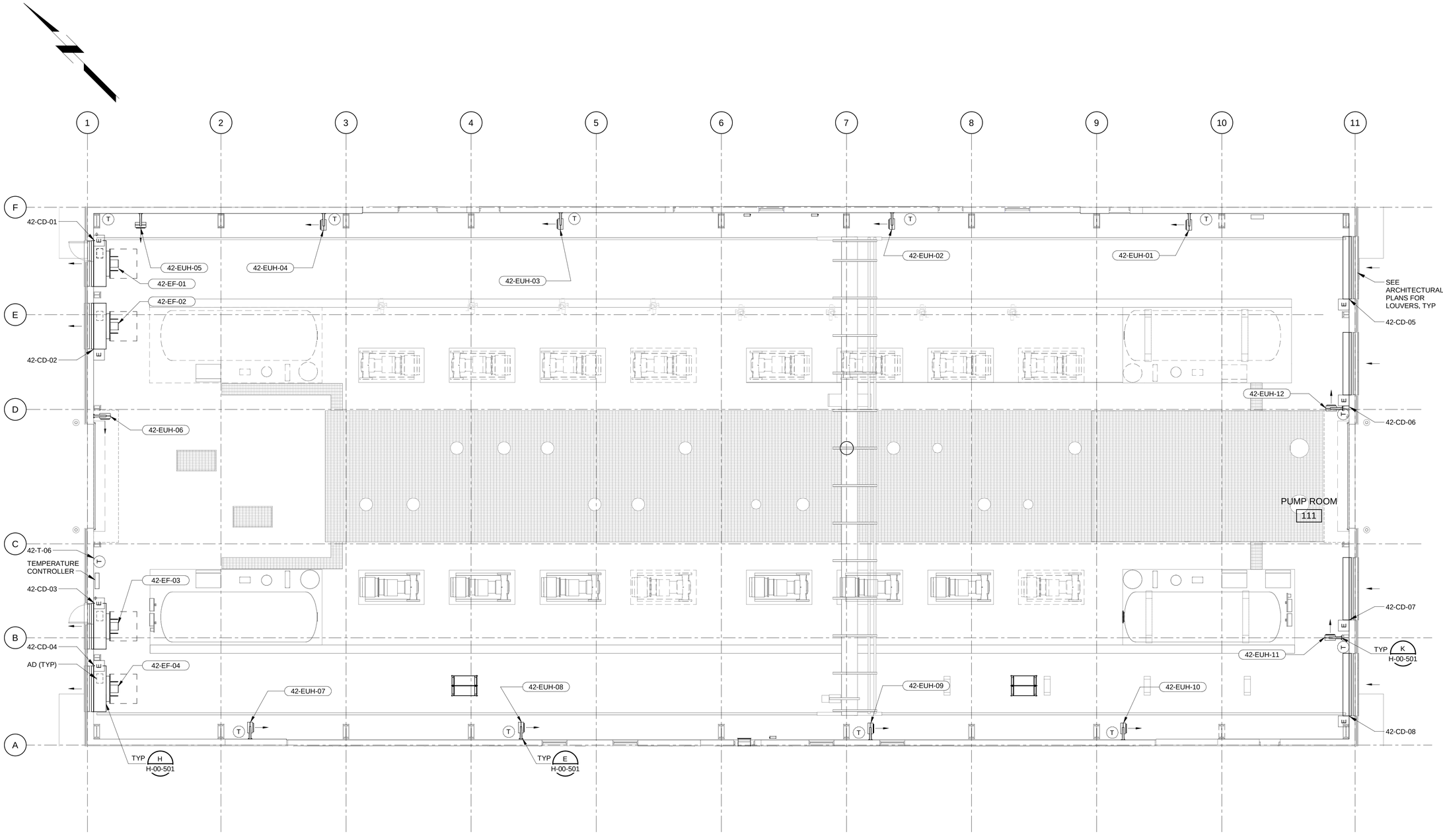

ENLARGED HVAC PUMP ROOM PLAN

1/8" = 1'-0"

8' 4' 0' 8' 16'

1/8" = 1'-0"

(SCALE BAR IS 4" AT FULL SCALE) 0 1/2 1 2 3 4

PLOTTED: 1/20/2023 7:32:40 AM
FILE: BIM 360://405654 - BWD Western Corridor Pump Station/405654-42-PUMP STATION.rvt
D11000

BLACK & VEATCH

Black & Veatch Corporation
Kansas City, Missouri

olsson

THIS DOCUMENT WAS ORIGINALLY ISSUED AND SEALED ON JANUARY 24, 2023 BY MICHELE F. ROTH, A LICENSED PROFESSIONAL ENGINEER IN THE STATE OF ARKANSAS, E-17959

BEAVER WATER DISTRICT

WESTERN CORRIDOR PUMP STATION

100% SET

REVISIONS AND RECORD OF ISSUE

DESIGNED:	TVT
DETAILED:	PEM
CHECKED:	DAV
APPROVED:	MFR
DATE:	JANUARY 24, 2023
PROJECT NO.:	405654

PUMP STATION

HVAC

OPERATING FLOOR PLAN - PUMP ROOM

H-42-102

86 OF 159

1 SECTION
H-42-103 1/2" = 1'-0"

SHEET KEYNOTES

1. SIZE REFRIGERANT SUCTION AND LIQUID LINE SETS PER MANUFACTURER'S INSTRUCTIONS. PROVIDE SUPPORTS AND ALL APPURTENANCES FOR A FULLY FUNCTIONAL SYSTEM.
2. REFRIGERANT PIPES TO BE SUPPORTED ON GRADE WITH DURA-BLOK™ PIPE SUPPORT OUTSIDE THE BUILDING.
3. FUTURE 16"x8" SR-1 LOCATION. NOT INSTALLED IN THIS CONTRACT. DUCTWORK SIZED FOR FUTURE AIRFLOW.
4. CONDENSATE DRAIN LINE, SIZE TO MATCH EQUIPMENT DRAIN OUTLET. VERIFY DRAIN LOCATION WITH EQUIPMENT PROVIDED. ROUTE CONDENSATE DOWN TO CONDENSATE DRAIN FUNNEL RECEPTOR IN THE WORKSHOP.
5. CONTRACTOR TO INSTALL FAN COIL UNIT ACCORDING TO MANUFACTURERS INSTRUCTIONS.

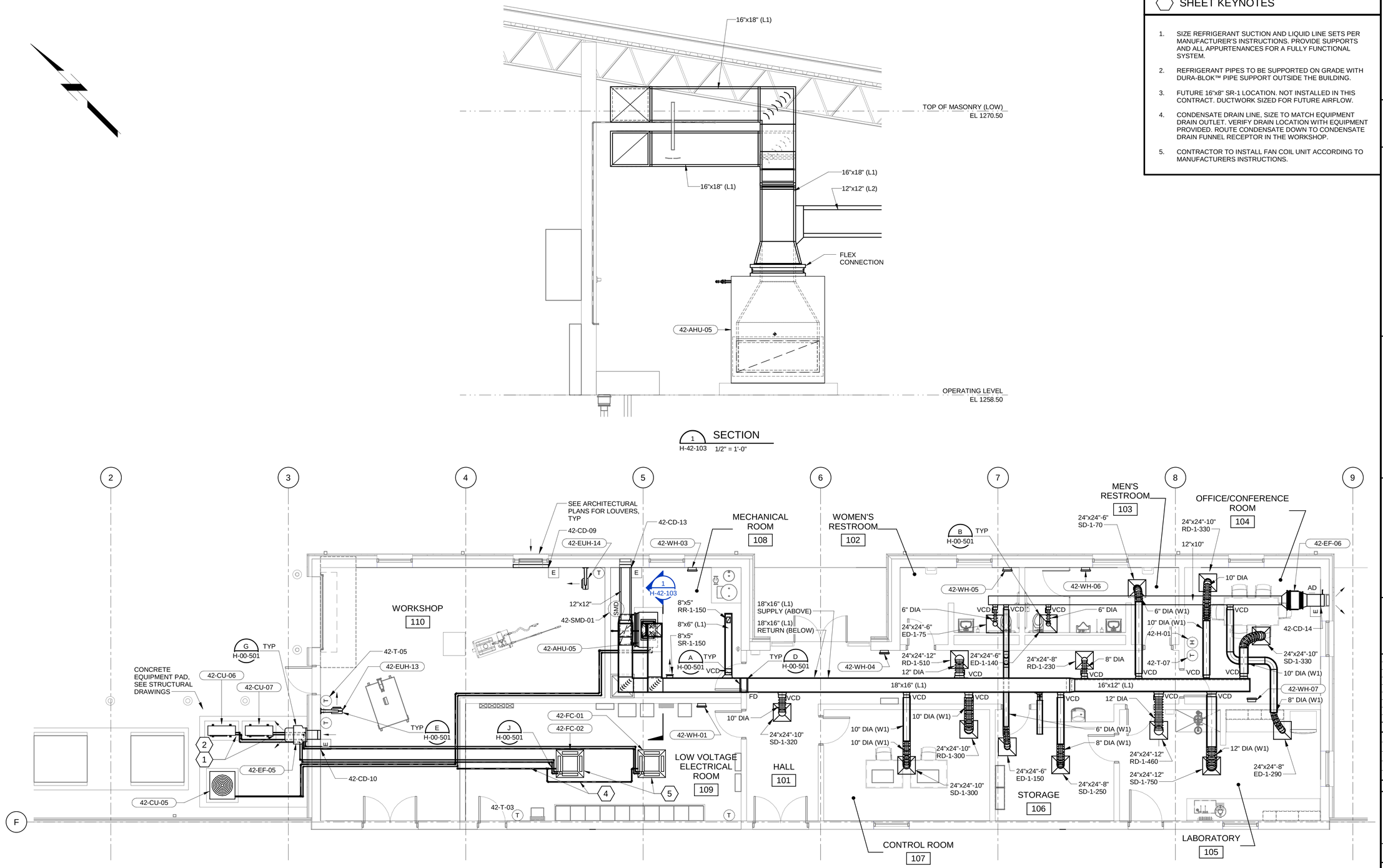

ENLARGED HVAC PLAN ADMINISTRATIVE WING
3/16" = 1'-0"

12" 6" 0' 1' 2' 3' 4' 5'
1/2" = 1'-0"

6' 4' 2' 0' 5' 10'
3/16" = 1'-0"

(SCALE BAR IS 4" AT FULL SCALE) 0 1/2 1 2 3 4

PLOTTED: 1/20/2023 7:32:47 AM
FILE: BIM 360://405654 - BWD Western Corridor Pump Station/405654-42-PUMP STATION.rvt
D11000

BLACK & VEATCH
Black & Veatch Corporation
Kansas City, Missouri

olsson

THIS DOCUMENT WAS ORIGINALLY ISSUED AND SEALED ON JANUARY 24, 2023 BY MICHELE F. ROTH, A LICENSED PROFESSIONAL ENGINEER IN THE STATE OF ARKANSAS, E-17959

BEAVER WATER DISTRICT

WESTERN CORRIDOR PUMP STATION

100% SET

REVISIONS AND RECORD OF ISSUE

DESIGNED:	TVT
DETAILED:	PEM
CHECKED:	MFR
APPROVED:	MFR
DATE:	JANUARY 24, 2023
PROJECT NO.:	405654

PUMP STATION

HVAC

OPERATING FLOOR PLAN - ADMINISTRATIVE WING

H-42-103

SHEET KEYNOTES

1. CONDENSATE DRAIN LINE, SIZE TO MATCH EQUIPMENT DRAIN OUTLET. VERIFY DRAIN LOCATION WITH EQUIPMENT PROVIDED. ROUTE CONDENSATE DOWN TO CONDENSATE DRAIN SUMP.
2. FUTURE 16"x8" SR-1 LOCATION. NOT INSTALLED IN THIS CONTRACT. DUCTWORK SIZED FOR FUTURE AIRFLOW.
3. FUTURE 24"x12" SR-1 LOCATION. NOT INSTALLED IN THIS CONTRACT. DUCTWORK SIZED FOR FUTURE AIRFLOW.
4. SIZE REFRIGERANT SUCTION AND LIQUID LINE SETS PER MANUFACTURERS INSTRUCTIONS. PROVIDE SUPPORTS AND ALL APPURTENANCES FOR A FULLY FUNCTIONAL SYSTEM.
5. CONTRACTOR TO COORDINATE DUCT SIZE WITH BATTERY CABINET PROVIDED UNDER ELECTRICAL DESIGN. SEE SPECIFICATION 16345.2.6.E.

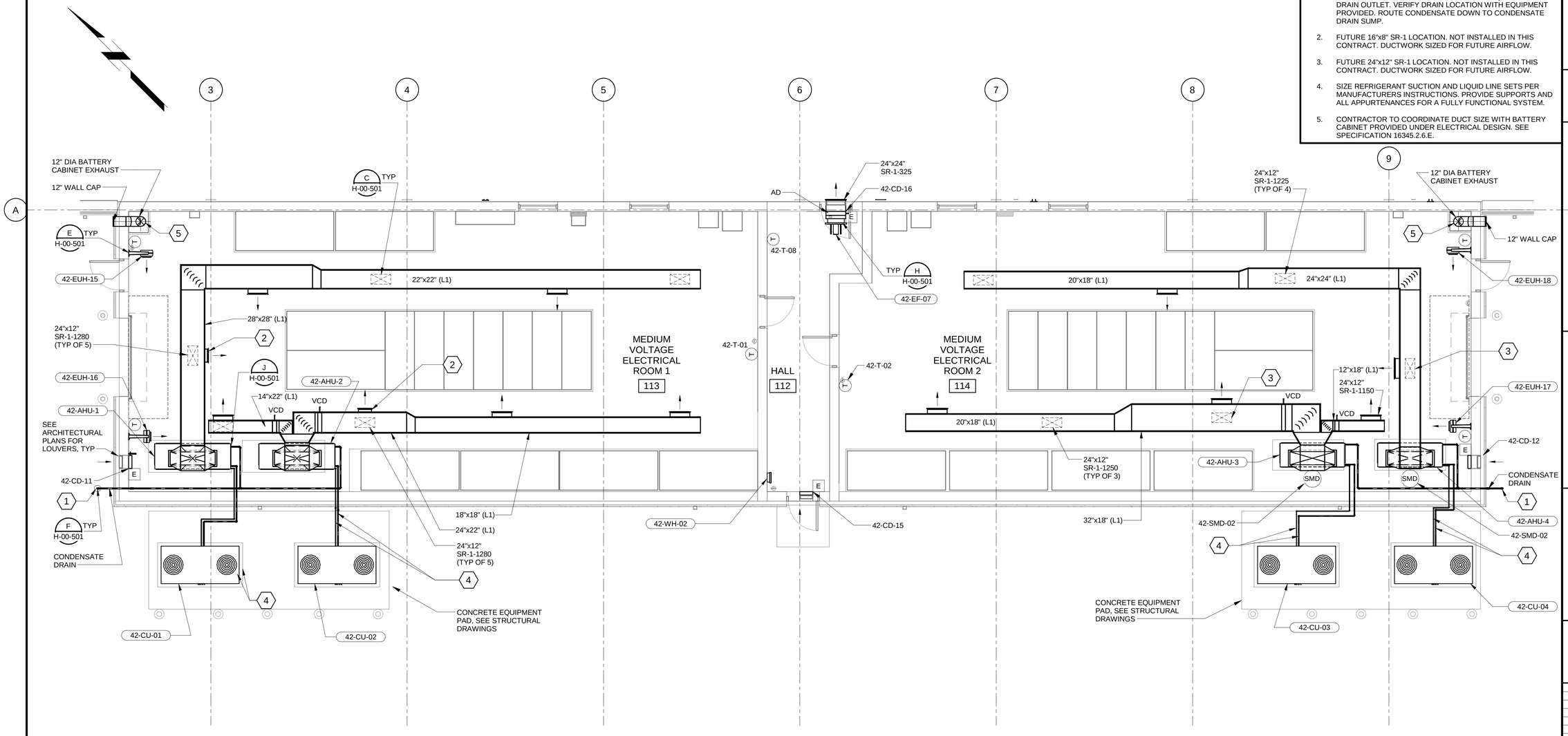

ENLARGED HVAC PLAN ELECTRICAL WING

3/16" = 1'-0"

6' 4' 2' 0' 5' 10'

3/16" = 1'-0"

(SCALE BAR IS 4" AT FULL SCALE) 0 1/2 1 2 3 4

PLOTTED: 1/20/2023 7:32:51 AM
FILE: BIM 360://405654 - BWD Western Corridor Pump Station/405654-42-PUMP STATION.rvt
D11000

BLACK & VEATCH

Black & Veatch Corporation
Kansas City, Missouri

olsson

THIS DOCUMENT WAS ORIGINALLY ISSUED AND SEALED ON JANUARY 24, 2023 BY MICHELE F. ROTH, A LICENSED PROFESSIONAL ENGINEER IN THE STATE OF ARKANSAS, E-17959

BEAVER WATER DISTRICT

WESTERN CORRIDOR PUMP STATION

100% SET

REVISIONS AND RECORD OF ISSUE

DESIGNED:	TVT
DETAILED:	PEM
CHECKED:	DAV
APPROVED:	MFR
DATE:	JANUARY 24, 2023
PROJECT NO.:	405654

PUMP STATION

HVAC

OPERATING FLOOR PLAN - ELECTRICAL WING

H-42-104

SHEET KEYNOTES

1. SIZE REFRIGERANT SUCTION AND LIQUID LINE SETS PER MANUFACTURERS INSTRUCTIONS. PROVIDE SUPPORTS AND ALL APPURTENANCES FOR A FULLY FUNCTIONAL SYSTEM.
2. CONDENSATE DRAIN LINE, SIZE TO MATCH EQUIPMENT DRAIN OUTLET. VERIFY DRAIN LOCATON WITH EQUIPMENT PROVIDED. ROUTE CONDENSATE DOWN TO CONDENSATE DRAIN SUMP.
3. CONTRACTOR TO COORDINATE DUCT SIZE WITH BATTERY CABINET PROVIDED UNDER ELECTRICAL DESIGN. SEE SPECIFICATION 16345.2.6.E.

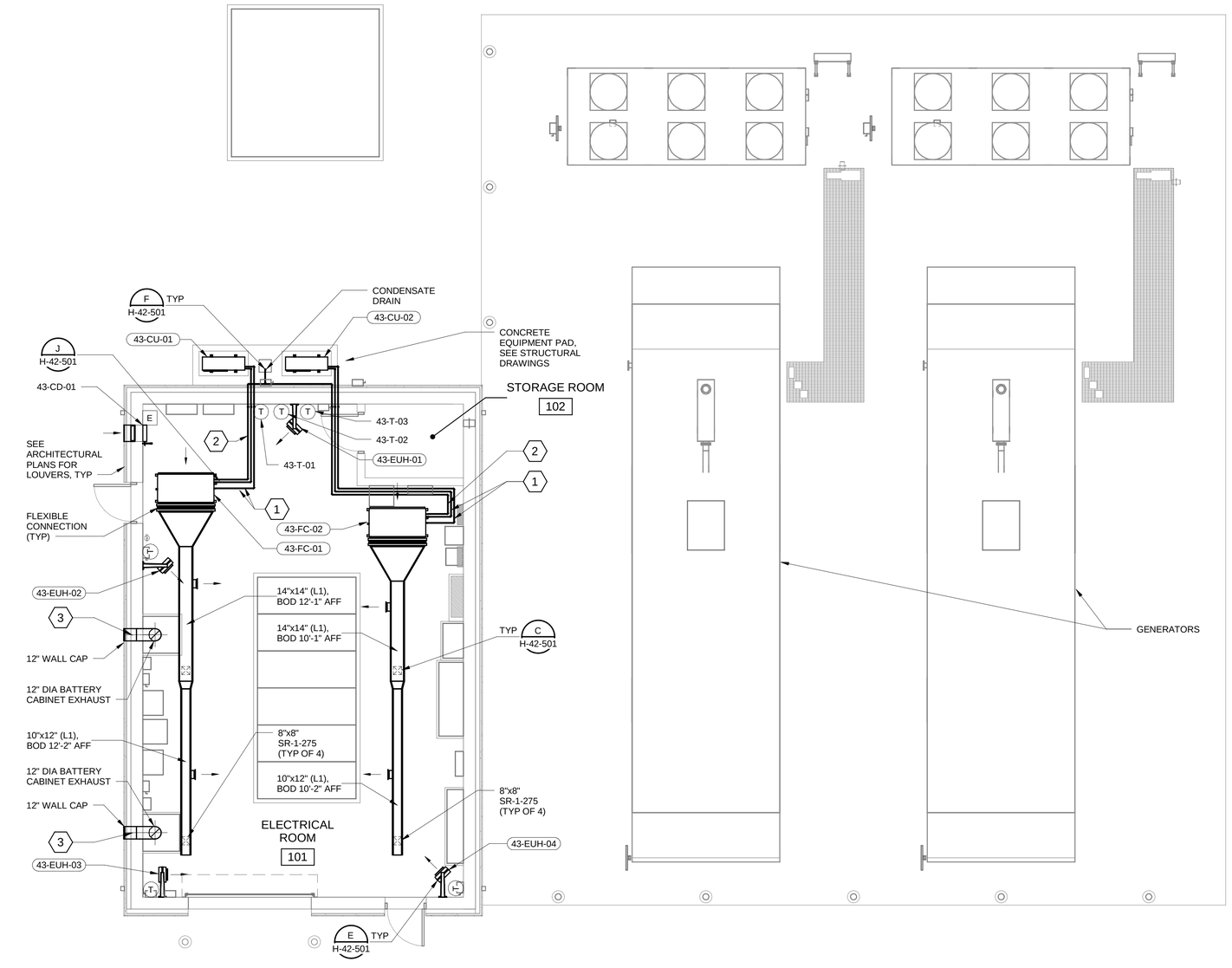

HVAC PLAN

3/16" = 1'-0"

6' 4' 2' 0' 5' 10'

3/16" = 1'-0"

(SCALE BAR IS 4" AT FULL SCALE) 0 1/2 1 2 3 4

PLOTTED: 1/20/2023 7:28:23 AM
FILE: BIM 360://405654 - BWD Western Corridor Pump Station/405654-43-ELECTRICAL BUILDING.rvt
D11000

BLACK & VEATCH
Black & Veatch Corporation
Kansas City, Missouri

olsson

THIS DOCUMENT WAS ORIGINALLY ISSUED AND SEALED ON JANUARY 24, 2023 BY MICHELE F. ROTH, A LICENSED PROFESSIONAL ENGINEER IN THE STATE OF ARKANSAS, E-17959

BEAVER WATER DISTRICT

WESTERN CORRIDOR PUMP STATION

100% SET

REVISIONS AND RECORD OF ISSUE

DESIGNED:	TVT
DETAILED:	PEM
CHECKED:	DAV
APPROVED:	MFR
DATE:	JANUARY 24, 2023
PROJECT NO.:	405654

ELECTRICAL BUILDING

HVAC

FLOOR PLAN

H-43-101

GENERAL ABBREVIATIONS

A

A	ALARM, COMPRESSED AIR OUTLET
AC	AIR COMPRESSOR
AD	ACCESS DOOR, AIR DRYER
AFD	ADJUSTABLE FREQUENCY DRIVE
AFF	ABOVE FINISH FLOOR
ALUM	ALUMINUM
AP	ACCESS PANEL
APPROX	APPROXIMATE
AR	AIR RECEIVER
AUTO	AUTOMATIC
AVG	AVERAGE
AVS	AUTOMATIC VALVE STATION

B

BF	BLIND FLANGE
BFF	BELOW FINISH FLOOR
BFP	BACKFLOW PREVENTER
BLDG	BUILDING
BOT	BOTTOM
BTUH	BRITISH THERMAL UNITS PER HOUR
BU	BELL-UP
BV	BALL VALVE

C

C	CHANNEL
CENTR	CENTRIFUGAL
CF	CABINET FAN
C/L	CENTERLINE
CO	CLEANOUT
CONC	CONCRETE
CONN	CONNECTION
CONT	CONTINUATION
CP	CIRCULATING PUMP
CS	CONTROL STATION
CV	CHECK VALVE, CONTROL VALVE
CWW	CLEAR WATER WASTE

D

D	DIRECT DRIVE
DEH	DEHUMIDIFIER
DF	DRINKING FOUNTAIN
DIA	DIAMETER
DN	DOWN
DSN	DOWNSPOUT NOZZLE

E

E	ELECTRIC
EA	EACH
EEW	EMERGENCY EYE WASH
EFF	EFFICIENCY
EL	ELEVATION
EP	EXPLOSION PROOF
EQUIP	EQUIPMENT
ES	EMERGENCY SHOWER
ES/EEW	EMERGENCY SHOWER AND EYEWASH
ET	EXPANSION TANK
EWC	ELECTRIC WATER COOLER
EWH	ELECTRIC WATER HEATER
EWT	ENTERING WATER TEMPERATURE
EXIST	EXISTING

F

F	DEGREES FAHRENHEIT
FCO	FLOOR CLEANOUT
FD	FLOOR DRAIN
FDB	DEGREES FAHRENHEIT DRY BULB
FLEX	FLEXIBLE
FM	FLOW METER
FPM	FEET PER MINUTE
FR	FUNNEL RECEPTOR
FS	FLOOR SINK, FLOW SWITCH
FSW	FILTER SURFACE WASH
FT	FEET

G

G	GAS OUTLET
GA	GAUGE
GALV	GALVANIZED
GCO	GRADE CLEANOUT
GD	GARBAGE DISPOSER
GIH	GAS INFRARED HEATER
GPM	GALLONS PER MINUTE
GUH	GAS UNIT HEATER
GV	GATE VALVE
GW	GLASS WASHER
GWH	GAS WATER HEATER

H

H	HAND OPERATOR, HEIGHT, HORIZONTAL
HE	HEAT EXCHANGER, HELIUM
HF	HOSE FAUCET
HO	HAND-OFF
HOA	HAND-OFF-AUTO
HP	HORSEPOWER
HR	HOUR, HOSE REEL
HUM	HUMIDIFIER
HV	HOSE VALVE
HWB	HEATING WATER BOILER
HZ	HERTZ

I

I	INTAKE
ID	INSIDE DIAMETER
IN	INCHES
INV	INVERT

J

JS	JANITOR'S SINK

K

KS	KITCHEN SINK
KW	KILOWATT

L

LAV	LAVATORY
LBS	POUNDS
LI	LEVEL INDICATOR
LS	LABORATORY SINK, LEVEL SWITCH
LWT	LEAVING WATER TEMPERATURE

M

MAU	MAKEUP AIR UNIT
MAX	MAXIMUM
MCA	MINIMUM CIRCUIT AMPS
MFR	MANUFACTURER
MIN	MINIMUM
MOD	MODULATING
MS	MOP SINK

N

NC	NORMALLY CLOSED
NO	NORMALLY OPEN, NUMBER
NPSHR	NET POSITIVE SUCTION HEAD REQUIRED
NT	NEUTRALIZATION TANK

O

OD	OUTSIDE DIAMETER
ORD	OVERFLOW ROOF DRAIN

P

PD	PRESSURE DROP (FEET OF WATER)
PAC	PACKAGED AIR CONDITIONING UNIT
PDI	PLUMBING AND DRAINAGE INSTITUTE
PDS	PRESSURE DIFFERENTIAL SWITCH
PL	PLATE
POS	POSITION
PPM	PARTS PER MILLION
PRS	PRESSURE REDUCING STATION
PRV	PRESSURE REDUCING VALVE
PS	PRESSURE SWITCH
PSI	POUNDS PER SQUARE INCH
PSIA	POUNDS PER SQUARE INCH ABSOLUTE
PSIG	POUNDS PER SQUARE INCH GAUGE

R

RCS	REMOTE CONTROL STATION
RD	ROOF DRAIN
REQD	REQUIRED

S

SF	SQUARE FEET, SUPPLY FAN
SH	SHEET, SHOWER
SIM	SIMILAR
SS	STAINLESS STEEL, SERVICE SINK
SSP	SUBMERSIBLE SUMP PUMP
STD	STANDARD
SV	SERVICE VALVE, SHUTOFF VALVE, SUPPLY VALVE, SOLENOID VALVE

T

TD	TRENCH DRAIN
TP	TRAP PRIMER
TS	TAMPER SWITCH
TYP	TYPICAL

U

UR	URINAL

V

V	VERTICAL
VAC	VACUUM OUTLET
VB	VACUUM BREAKER
VCD	VOLUME CONTROL DAMPER
VF	VANEAXIAL FAN
VP	VACUUM PUMP
VSP	VERTICAL COLUMN SUMP PUMP
VTR	VENT THRU ROOF

W

W	WIDE FLANGE, WIDTH
WBP	WATER BOOSTER PUMP
WC	WATER CLOSET, WATER COLUMN
WCO	WALL CLEANOUT
WG	WATER GAUGE
WH	WALL HYDRANT
WHA	WATER HAMMER ARRESTOR
WM	WALL MOUNTED
WST	WATER STORAGE TANK
WT	WEIGHT

SYSTEM ABBREVIATIONS

WATER

NPW	COLD WATER (NON-POTABLE)
CW	COLD WATER (POTABLE)
DE	DEIONIZED WATER
DW	DISTILLED WATER
F	FIRE PROTECTION WATER
HWC	HOT WATER CIRCULATING (POTABLE)
NPHW	HOT WATER (NON-POTABLE)
HW	HOT WATER (POTABLE)
PEW	PLANT EFFLUENT WATER
PW	POTABLE WATER SERVICE
SVW	SERVICE WATER
SW	SOFTENED WATER
TPW	TEMPERED WATER
TW	TEPID WATER

WASTE

CRV	CHEMICAL RESISTANT VENT
CRW	CHEMICAL RESISTANT WASTE
CWW	CLEAR WATER WASTE
D	INDIRECT DRAIN
PD	SUMP PUMP DISCHARGE
SAN	SANITARY DRAIN
ST	STORM DRAIN
V	VENT

FUEL GAS

G	NATURAL GAS
PG	PROPANE GAS

SPECIAL

A	COMPRESSED AIR
A	CET ACETYLENE
AR	ARGON
H	HYDROGEN
HE	HELIUM
ME	METHANE
N	NITROGEN
NO	NITROUS OXIDE
OX	OXYGEN
VAC	VACUUM

VALVE LEGEND

PLAN	SECTION	2D SYMBOL	DESCRIPTION
			ANGLE VALVE
			BACKFLOW PREVENTER W/ STRAINER (2" AND SMALLER)
			BACKFLOW PREVENTER
			BACKWATER VALVE
			BALL VALVE
			BUTTERFLY VALVE
			CHECK VALVE
			GATE VALVE
			GLOBE VALVE
			PLUG VALVE
			PRESSURE REDUCING VALVE
			THREE WAY VALVE

PIPING ACCESSORIES LEGEND

PLAN	2D SYMBOL	DESCRIPTION
		FLEXIBLE CONNECTION
HF	HF	HOSE FAUCET W/0 VACUUM BREAKER
HFVB	HF	HOSE FAUCET W/ VACUUM BREAKER
HV		HOSE VALVE W/ HOSE NIPPLE
PRS	PRS	PRESSURE REDUCING STATION
		PRESSURE RELIEF VALVE
T		PRESSURE / TEMPERATURE RELIEF VALVE
Q	Q	QUICK COUPLING
WH	WH	WALL HYDRANT W/ VACUUM BREAKER
	M	METER
	S	WYE STRAINER
	S	WYE STRAINER W/ BLOWOFF
		VACUUM BREAKER

PIPING LEGEND

PLAN	2D SYMBOL	DESCRIPTION
		PIPING ABOVE FLOOR OR GRADE
		PIPING BELOW FLOOR OR GRADE
		PIPE TURNING UP
		PIPE TURNING DOWN

CONTROLS AND INSTRUMENTATION

2D SYMBOL	DESCRIPTION
FS	FLOW SWITCH
LS	LEVEL SWITCH
P	PRESSURE GAUGE W/ SHUTOFF VALVE
S	SOLENOID OPERATOR
	THERMOMETER - DIAL TYPE
	THERMOMETER - STEM TYPE
V	VACUUM GAUGE W/ SHUTOFF VALVE

PIPE FITTING LEGEND

PLAN	2D SYMBOL	DESCRIPTION
		BLIND FLANGE
		CAP
		REDUCER
		SLEEVE
TP	TP	TEST PLUG
		UNION
		P-TRAP
		VTR

PLUMBING LEGEND

PLAN	2D SYMBOL	DESCRIPTION
		BELL-UP DRAIN OR FUNNEL RECEPTOR W/ TRAP
	FCO	CLEANOUT (FLOOR)
	CO	CLEANOUT (PIPE)
	CW HW	BLENDING VALVE
		DOWNSPOUT NOZZLE
		EMERGENCY SHOWER / EYEWASH
		FLOOR DRAIN
		HOSE RACK
		HOSE REEL
		ROOF DRAIN
		SHOWER
		SPLASH BLOCK
	A	WATER HAMMER ARRESTOR W/ PDI SIZE DESIGNATION

SCHEMATICS

2D SYMBOL	DESCRIPTION
	AIR-GAP FITTING
	BELL-UP DRAIN OR FUNNEL RECEPTOR
	FLOOR CLEANOUT
	FLOOR DRAIN
	FLOOR DRAIN W/ FUNNEL
	VENT THROUGH ROOF

SCHEMATICS SPECIALTIES

2D SYMBOL	DESCRIPTION
	AUTOMATIC VALVE STATION
S	BASKET STRAINER
	COMBINATION PUMP DISCHARGE VALVE
	FLOW CONTROL VALVE
	FLOW SENSOR METER
	AIR VENT
	ROTAMETER
	SIGHT FLOW INDICATOR
	SUCTION DIFFUSER (SCHEMATIC)
TP	TRAP PRIMER

GENERAL PLUMBING NOTES

1. THIS IS GENERAL LEGEND AND ABBREVIATION SHEET FOR THE PLUMBING DRAWINGS. SOME ITEMS CONTAINED ON THIS SHEET MAY NOT BE USED ON THIS SPECIFIC PROJECT.
2. ALL MECHANICAL PLUMBING WORK SHALL BE IN ACCORDANCE WITH THE FOLLOWING APPLICABLE CODES:
   - 2012 INTERNATIONAL BUILDING CODE
   - 2012 ARKANSAS FIRE PREVENTION CODE, VOLUME I - FIRE
   - 2018 ARKANSAS FUEL GAS CODE
   - 2018 ARKANSAS PLUMBING CODE
   - 2009 INTERNATIONAL ENERGY CONSERVATION CODE (IECC)
3. FOR PLUMBING VENTS, FLUE FLASHING, AND ROOF DRAIN DETAILS, SEE ARCHITECTURAL DRAWINGS.
4. SEE ARCHITECTURAL AND STRUCTURAL DRAWINGS FOR ALL EQUIPMENT BASE DETAILS.
5. "SCREENED" DELINEATION DENOTES EXISTING AND NEW FACILITIES AND IS FOR REFERENCE ONLY. "LIGHT" LINE DELINEATION DENOTES EXISTING MECHANICAL EQUIPMENT AND SYSTEMS. EXISTING FACILITY AND MECHANICAL SYSTEMS INFORMATION WAS TAKEN FROM PREVIOUS DRAWINGS, CONSTRUCTION RECORDS, DATA, AND FIELD SURVEY INFORMATION. ACTUAL LOCATION, ARRANGEMENT, AND DIMENSIONS SHALL BE FIELD VERIFIED AND WORK INSTALLED TO MEET ACTUAL CONDITIONS AND LOCATIONS ENCOUNTERED. "BOLD" (DARK) DELINEATION IS NEW WORK TO BE CONSTRUCTED UNDER THIS CONTRACT.
6. ALL PIPE PENETRATIONS THROUGH FIRE RESISTANCE RATED ASSEMBLIES SHALL BE PROVIDED WITH FIRESTOP SYSTEMS, EQUIPMENT AND ACCESSORIES TO RESIST THE PASSAGE OF FIRE, SMOKE AND OTHER GASES. THE ORIGINAL FIRE RESISTANCE RATING OF THE ASSEMBLY PENETRATED SHALL BE MAINTAINED FOR ALL TYPES OF PENETRATIONS. SEE ARCHITECTURAL DRAWINGS FOR RATED ASSEMBLY LOCATIONS.
7. METAL ROOF DECKING OR BOTTOM CHORD OF BAR JOISTS SHALL NOT BE USED FOR THE SUPPORT OF EQUIPMENT OR PIPING.
8. ALL HANGERS, BRACKETS, OR BRACES FOR EQUIPMENT AND PIPING ARE NOT INDICATED ON THE DRAWINGS. REFER TO THE SPECIFICATIONS FOR SUPPORT REQUIREMENTS NOT SHOWN ON THE PLANS.
9. ALL EQUIPMENT AND PIPING FINAL LOCATIONS SHALL BE COORDINATED TO AVOID INTERFERENCES WITH STRUCTURE, OTHER PIPING, EQUIPMENT, DUCTWORK, AND CONDUIT. UNLESS SPECIFICALLY DIMENSIONED, THE PIPE ROUTING SHOWN IS INTENDED TO INDICATE GENERAL LOCATION ONLY.
10. ALL PIPING SHALL BE ROUTED AS HIGH AS POSSIBLE WITH A MINIMUM HEIGHT OF 8'-0" ABOVE THE WALKING SURFACE UNLESS OTHERWISE INDICATED BY A CENTERLINE OR INVERT ELEVATION.
11. PIPING INSTALLED ABOVE SUSPENDED CEILINGS SHALL BE INSTALLED TO ALLOW A MINIMUM 6 INCH CLEARANCE BETWEEN THE CEILING AND PIPING.
12. ALL HOSE FAUCETS AND HOSE VALVES SHALL BE INSTALLED 3'-0" ABOVE FINISHED FLOOR UNLESS OTHERWISE NOTED. WALL HYDRANTS SHALL BE INSTALLED 2'-0" ABOVE GRADE UNLESS OTHERWISE NOTED.
13. ALL HOSE FAUCETS AND WALL HYDRANTS SHALL BE NOMINAL 3/4" PIPE SIZE UNLESS OTHERWISE NOTED. ALL HOSE VALVES SHALL BE 1 1/2" NOMINAL PIPE SIZE UNLESS OTHERWISE NOTED.
14. ALL HOSE FAUCETS, WALL HYDRANTS, AND OTHER OUTLETS ON NON-POTABLE WATER LINES WHICH COULD BE USED FOR DRINKING OR DOMESTIC USE SHALL BE POSTED AS REQUIRED BY THE APPLICABLE CODES. IN ABSENCE OF A CODE REQUIREMENT, THE OUTLETS SHALL BE POSTED WITH A TAG IN THE SHAPE OF A 4" EQUILATERAL TRIANGLE BEARING THE LEGEND "DANGER: UNSAFE WATER" IN LETTERS NOT LESS THAN 1/2" IN HEIGHT. THIS TAG SHALL BE SECURELY ATTACHED IN A VISIBLE LOCATION DIRECTLY ABOVE OUTLET. THE TAG SHALL BE PAINTED ORANGE AND THE LETTERS BLACK.
15. ALL RELIEF VALVES SHALL BE PIPED TO FLOOR OR BELL-UP DRAINS.
16. SEISMIC RESTRAINTS/BRACING SHALL BE PROVIDED FOR ALL EQUIPMENT, PIPING AND ACCESSORIES IN ACCORDANCE WITH THE LATEST SMACNA SEISMIC RESTRAINT MANUAL AND LOCAL BUILDING CODES. CONTRACTOR SHALL BE RESPONSIBLE FOR ALL SEISMIC SUPPORTS AND ADDITIONAL/MISCELLANEOUS STEEL REQUIRED FOR PROPER INSTALLATION OF SUPPORTS. SUPPORTS AND SEISMIC RESTRAINTS DESIGN SUBMITTALS SHALL BEAR THE STAMP AND SIGNATURE OF A LICENSED ENGINEER.
17. INSULATION SHALL BE PROVIDED FOR EQUIPMENT AND PIPING SYSTEMS AS INDICATED IN THE SPECIFICATIONS.
18. PLUMBING VENTS OUTLETS SHALL BE LOCATED A MINIMUM OF 10'-0" AWAY FROM ANY OUTSIDE AIR INLET.
19. PIPING SIZES TO EQUIPMENT AND EQUIPMENT SUPPORTS SHALL BE VERIFIED AND ADJUSTED TO MATCH ACTUAL EQUIPMENT FURNISHED.
20. ALL MATERIALS, FITTINGS, COVERS, AND EQUIPMENT INSTALLED IN RETURN AIR PLENUMS SHALL BE NONCOMBUSTIBLE AND UL LISTED FOR USE IN RETURN AIR PLENUMS.

BLACK & VEATCH
Black & Veatch Corporation
Kansas City, Missouri

olsson

THIS DOCUMENT WAS ORIGINALLY ISSUED AND SEALED ON JANUARY 24, 2023 BY MICHELE F. ROTH, A LICENSED PROFESSIONAL ENGINEER IN THE STATE OF ARKANSAS, E-17959

BEAVER WATER DISTRICT

WESTERN CORRIDOR PUMP STATION

100% SET

REVISIONS AND RECORD OF ISSUE

DESIGNED:	SAM
DETAILED:	YBM
CHECKED:	ABG
APPROVED:	MFR
DATE:	JANUARY 24, 2023
PROJECT NO.:	405654

GENERAL

PLUMBING

LEGENDS, ABBREVIATIONS, AND GENERAL NOTES

P-00-001

(SCALE BAR IS 4" AT FULL SCALE) 0 1/2 1 2 3 4

PLOTTED: 1/20/2023 3:07:00 PM
FILE: BIM 360://405654 - BWD Western Corridor Pump Station/405654-00-GENERAL.rvt
D1000

GENERAL SHEET NOTES

1. SEE DRAWING P-00-001 FOR LEGENDS, ABBREVIATIONS, AND GENERAL NOTES.

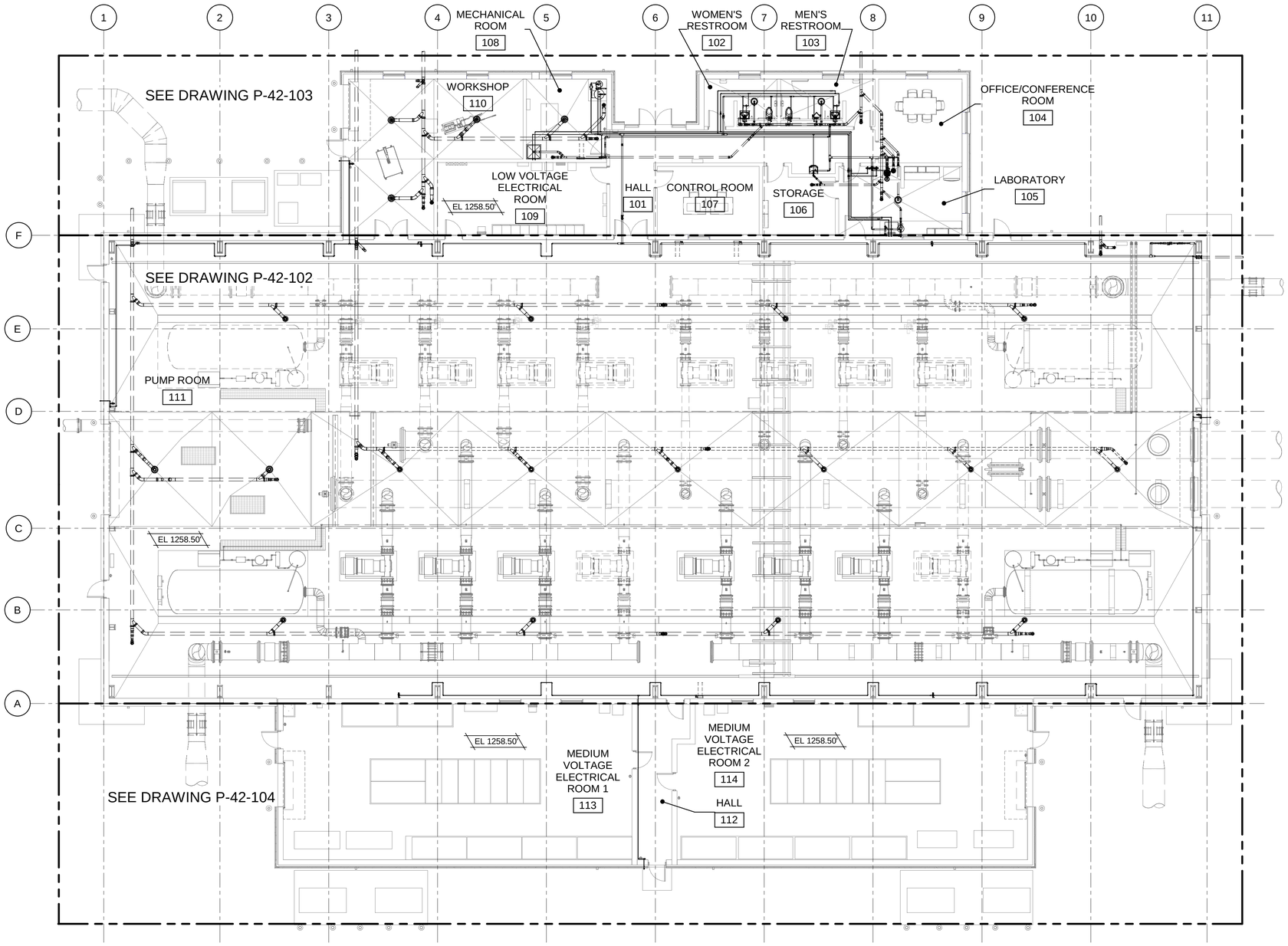

OVERALL PLAN

3/32" = 1'-0"

12' 8' 4' 0' 10' 20'

3/32" = 1'-0"

(SCALE BAR IS 4" AT FULL SCALE) 0 1/2 1 2 3 4

BLACK & VEATCH

Black & Veatch Corporation
Kansas City, Missouri

olsson

THIS DOCUMENT WAS ORIGINALLY ISSUED AND SEALED ON JANUARY 24, 2023 BY MICHELE F. ROTH, A LICENSED PROFESSIONAL ENGINEER IN THE STATE OF ARKANSAS, E-17959

BEAVER WATER DISTRICT

WESTERN CORRIDOR PUMP STATION

100% SET

REVISIONS AND RECORD OF ISSUE

DESIGNED:	SAM
DETAILED:	YBM
CHECKED:	ABG
APPROVED:	MFR
DATE:	JANUARY 24, 2023
PROJECT NO.:	405654

PUMP STATION

PLUMBING

OVERALL PLAN

P-42-101

PLOTTED: 1/20/2023 7:30:52 AM
FILE: BIM 360://405654 - BWD Western Corridor Pump Station/405654-42-PUMP STATION.rvt
D11000

GENERAL SHEET NOTES

1. SEE DRAWING P-00-001 FOR LEGENDS, ABBREVIATIONS, AND GENERAL NOTES.
2. ALL FLOOR DRAINS AND FUNNEL RECEPTORS SHALL RECEIVE A 1/2" TRAP PRIMER COMMECTION FROM TRAP PRIMING PANEL 42-TP-02, 42-TP-03,42-TP-04.

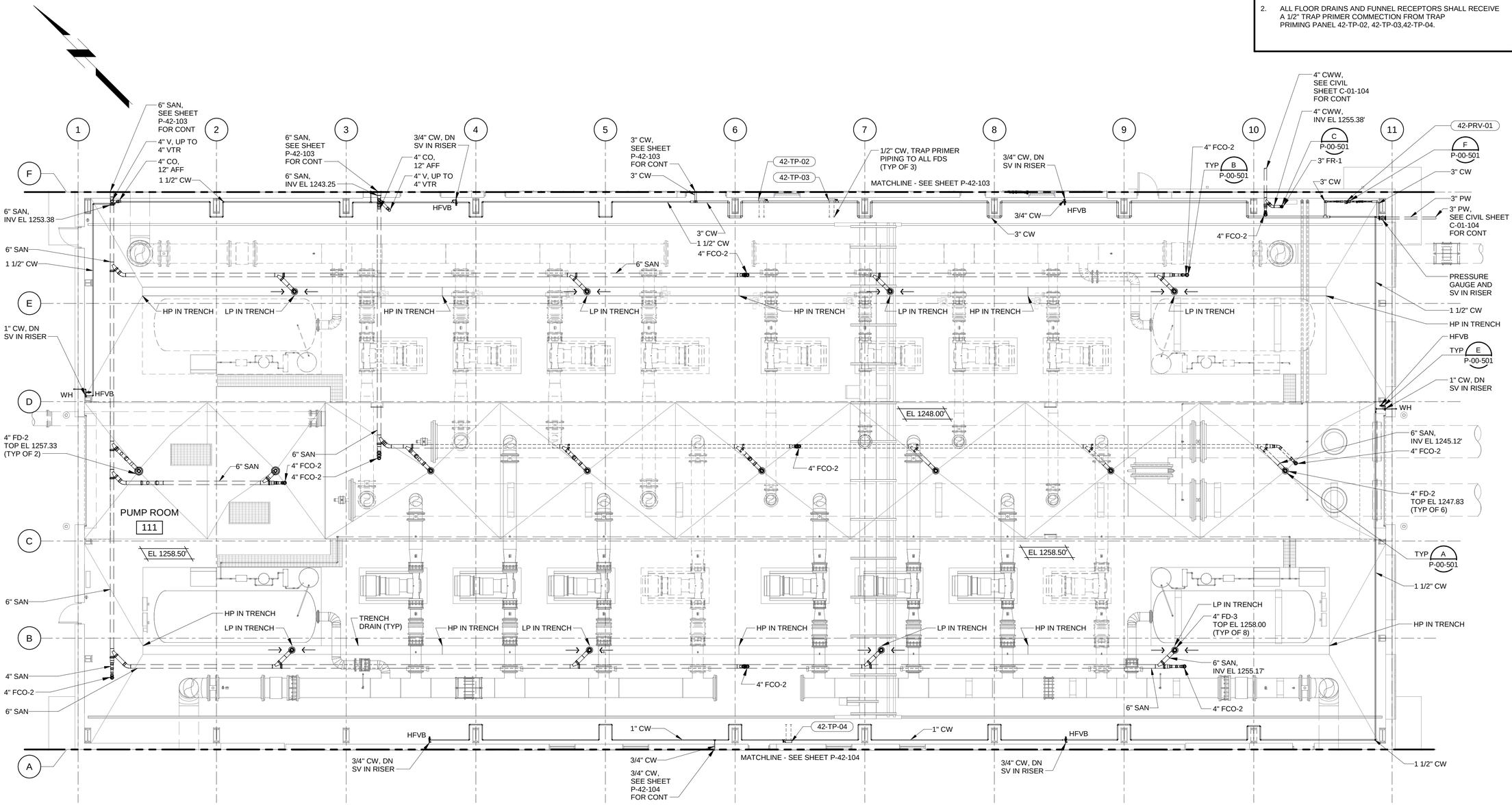

ENLARGED PLAN

1/8" = 1'-0"

8' 4' 0' 8' 16'

1/8" = 1'-0"

(SCALE BAR IS 4" AT FULL SCALE) 0 1/2 1 2 3 4

BLACK & VEATCH

Black & Veatch Corporation
Kansas City, Missouri

olsson

THIS DOCUMENT WAS ORIGINALLY ISSUED AND SEALED ON JANUARY 24, 2023 BY MICHELE F. ROTH, A LICENSED PROFESSIONAL ENGINEER IN THE STATE OF ARKANSAS, E-17959

BEAVER WATER DISTRICT

WESTERN CORRIDOR PUMP STATION

100% SET

REVISIONS AND RECORD OF ISSUE

DESIGNED:	SAM
DETAILED:	YBM
CHECKED:	ABG
APPROVED:	MFR
DATE:	JANUARY 24, 2023
PROJECT NO.:	405654

PUMP STATION

PLUMBING

OPERATING FLOOR PLAN - PUMP ROOM

P-42-102

92 OF 159

PLOTTED: 1/20/2023 7:33:24 AM
FILE: BIM 360://405654 - BWD Western Corridor Pump Station/405654-42-PUMP STATION.rvt
D11000

GENERAL SHEET NOTES

1. SEE DRAWING P-00-001 FOR LEGENDS, ABBREVIATIONS, AND GENERAL NOTES.
2. ALL FLOOR DRAINS AND FUNNEL RECEPTORS SHALL RECEIVE A 1/2" TRAP PRIMER COMMECTION FROM TRAP PRIMING PANEL 42-TP-01.

SHEET KEYNOTES

1. TEPID WATER BLENDING STATION.
2. FAN COIL UNIT CONDENSATE DRAIN DISCHARGE OUTLET INDIRECTLY TO OVER FUNNEL RECEPTOR. PROVIDE 1" AIR GAP.

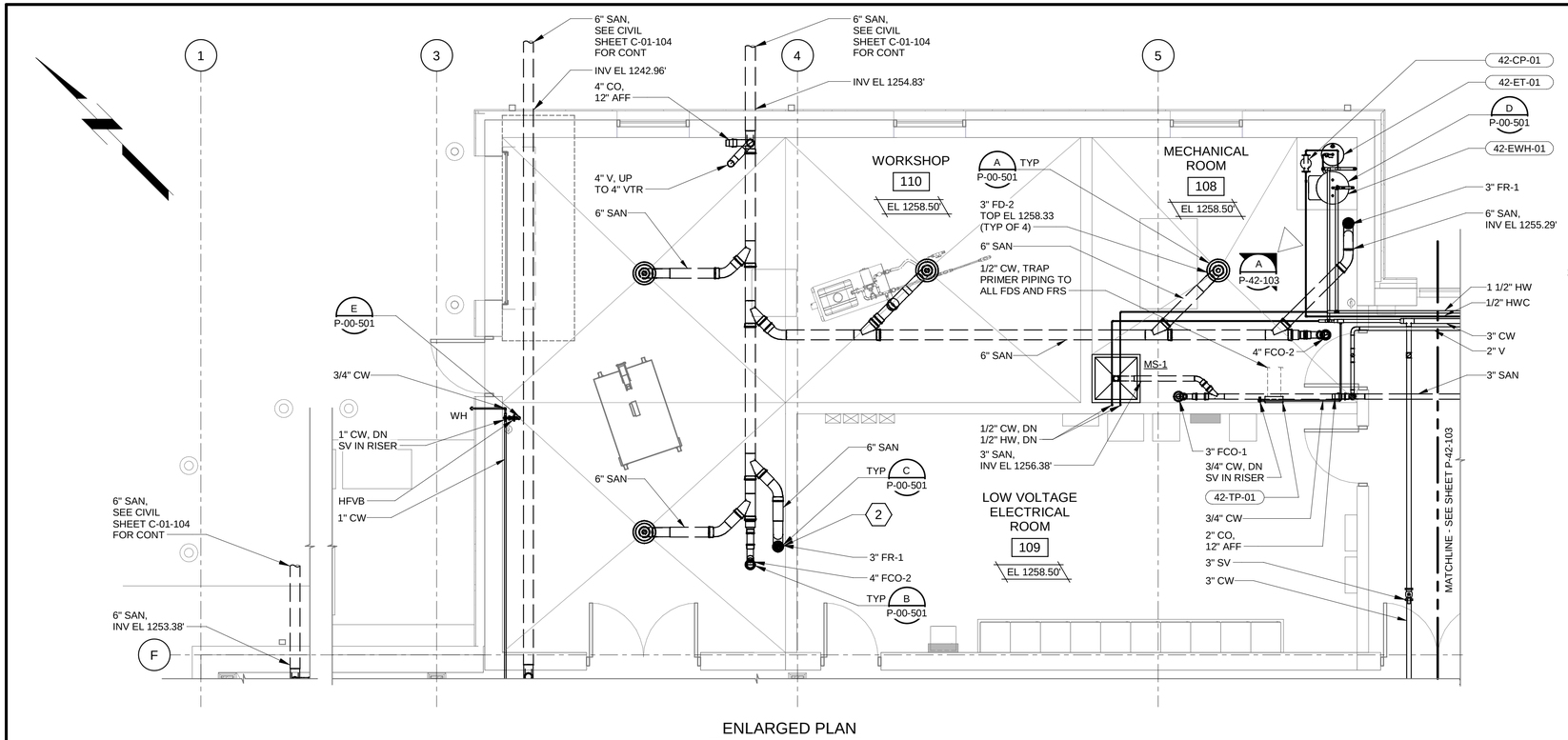

ENLARGED PLAN

1/4" = 1'-0"

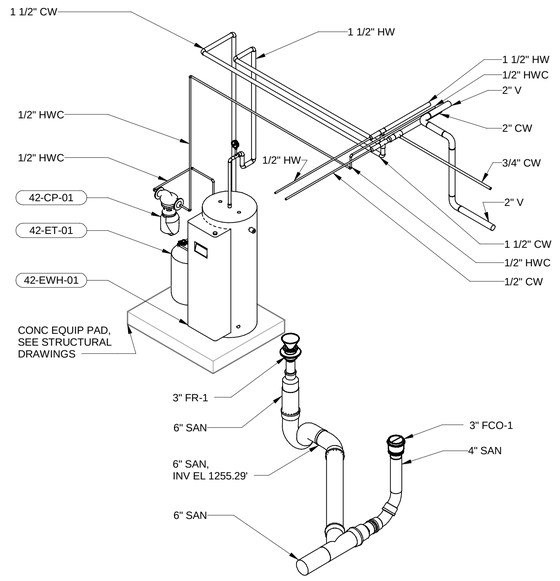

DETAIL - 3D VIEW-SOUTH WEST

NO SCALE

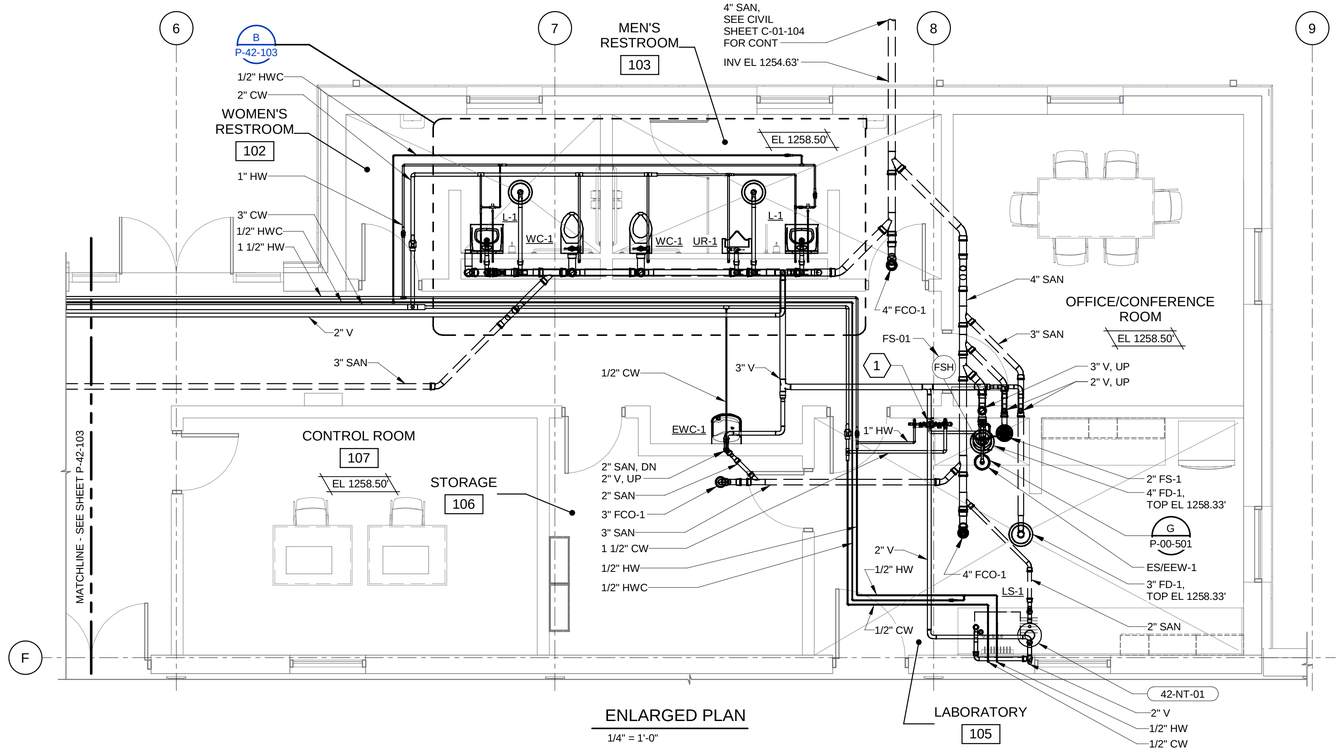

ENLARGED PLAN

1/4" = 1'-0"

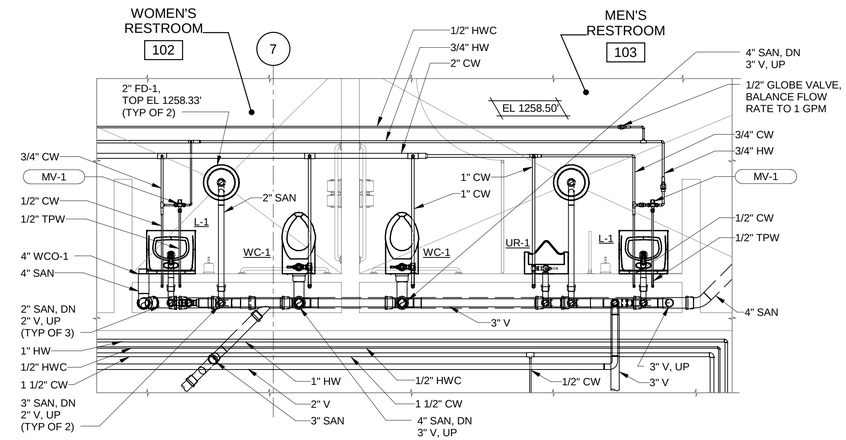

DETAIL - ENLARGED PLAN

3/8" = 1'-0"

12" 0' 1' 2' 3' 4' 5' 6' 7'

3/8" = 1'-0"

4' 2' 0' 4' 8'

1/4" = 1'-0"

(SCALE BAR IS 4" AT FULL SCALE) 0 1/2 1 2 3 4

BLACK & VEATCH

Black & Veatch Corporation
Kansas City, Missouri

olsson

THIS DOCUMENT WAS ORIGINALLY ISSUED AND SEALED ON JANUARY 24, 2023 BY MICHELE F. ROTH, A LICENSED PROFESSIONAL ENGINEER IN THE STATE OF ARKANSAS, E-17959

BEAVER WATER DISTRICT

WESTERN CORRIDOR PUMP STATION

100% SET

REVISIONS AND RECORD OF ISSUE

DESIGNED:	SAM
DETAILED:	YBM
CHECKED:	ABG
APPROVED:	MFR
DATE:	JANUARY 24, 2023
PROJECT NO.:	405654

PUMP STATION

PLUMBING

OPERATING FLOOR PLAN AND DETAILS - ADMINISTRATIVE WING

P-42-103

93 OF 159

PLOTTED: 1/20/2023 7:33:36 AM
FILE: BIM 360://405654 - BWD Western Corridor Pump Station/405654-42-PUMP STATION.rvt
D11000

GENERAL SHEET NOTES

1. SEE DRAWING P-00-001 FOR LEGENDS, ABBREVIATIONS, AND GENERAL NOTES.

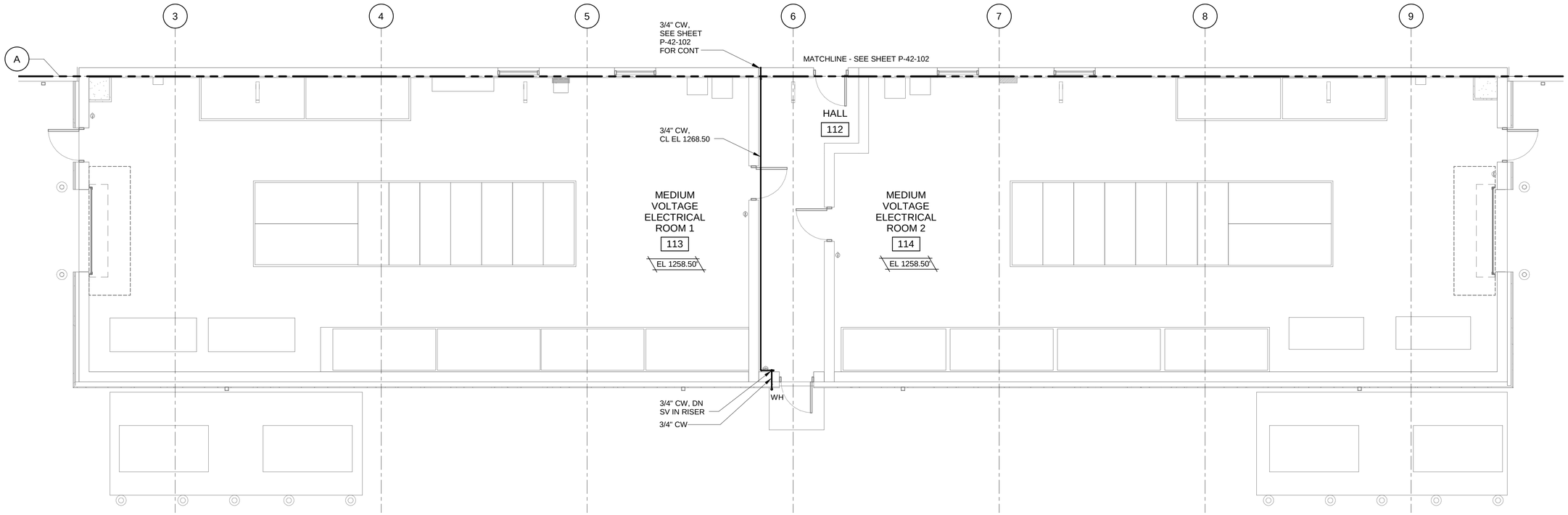

ENLARGED PLAN

3/16" = 1'-0"

6' 4' 2' 0' 5' 10'

3/16" = 1'-0"

(SCALE BAR IS 4" AT FULL SCALE) 0 1/2 1 2 3 4

PLOTTED: 1/20/2023 7:33:39 AM
FILE: BIM 360://405654 - BWD Western Corridor Pump Station/405654-42-PUMP STATION.rvt
D11000

BLACK & VEATCH

Black & Veatch Corporation
Kansas City, Missouri

olsson

THIS DOCUMENT WAS ORIGINALLY ISSUED AND SEALED ON JANUARY 24, 2023 BY MICHELE F. ROTH, A LICENSED PROFESSIONAL ENGINEER IN THE STATE OF ARKANSAS, E-17959

BEAVER WATER DISTRICT

WESTERN CORRIDOR PUMP STATION

100% SET

REVISIONS AND RECORD OF ISSUE

DESIGNED:	SAM
DETAILED:	YBM
CHECKED:	ABG
APPROVED:	MFR
DATE:	JANUARY 24, 2023
PROJECT NO.:	405654

PUMP STATION

PLUMBING

OPERATING FLOOR PLAN - ELECTRICAL WING

P-42-104

94 OF 159

PIPING ACCESSORIES SCHEDULE

UNIT NUMBER	MANUFACTURER	MODEL	DESCRIPTION	NOTES
FCO-1	SMITH	4111 SERIES	HEAVY DUTY FLOOR CLEANOUT, SECURED ROUND ADJUSTABLE NICKEL BRONZE TOP.	---
FCO-2	SMITH	4240 SERIES	HEAVY DUTY FLOOR CLEANOUT WITH ADJUSTABLE TRACTOR COVER.	---
FD-1	SMITH	2005-A SERIES	MEDIUM DUTY CAST IRON FLOOR DRAIN, ADJUSTABLE TOP, NICKEL BRONZE ROUND GRATE W/ TRAP PRIMER.	---
FD-2	SMITH	2310 SERIES	MEDIUM DUTY CAST IRON FLOOR DRAIN, ADJUSTABLE TOP, LOOSE SET CAST IRON GRATE W/ TRAP PRIMER.	---
FD-3	SMITH	2310-D SERIES	MEDIUM DUTY CAST IRON FLOOR DRAIN, ADJUSTABLE TOP, DOME GRATE.	---
FR-1	SMITH	3800 SERIES	MEDIUM CAST IRON FUNNEL RECEPTOR, WATER STOP FLANGE, THREADED OR NO-HUB CONNECTION.	---
FS-1	SMITH	3040 SERIES	CAST IRON FLOOR SINK, 8" DIAMETER TOP, DOME BOTTOM STRAINER.	---
GCO-1	SMITH	4240 SERIES	HEAVY DUTY FLOOR CLEANOUT WITH ADJUSTABLE TRACTOR COVER.	---
MV-1	SYMMONS	MAXLINE 5-225-CK	THERMOSTATIC MIXING VALVE, 1/2" BODY, 0.5 GPM MINIMUM FLOW, 7.5 GPM FLOW AT 20 PSI MAXIMUM DIFFERENTIAL PRESSURE, INITIAL SETPOINT 110 F.	---

PLUMBING EQUIPMENT SCHEDULE

UNIT NUMBER	MANUFACTURER	MODEL	DESCRIPTION	APPROX WEIGHT (LBS)	NOTES
42-CP-01	BELL & GOSSETT	NBF-22U	IN-LINE HOT WATER CIRCULATING PUMP, 1.0 GPM, 7 FEET HEAD, 120 VOLT, 1 PHASE, 60 HZ.	9	---
42-ET-01	AMTROL THERM-X-TROL	ST-C SERIES	EXPANSION TANK, PIPELINE MOUNTED, 17.5 GALLON, PRECHARGE TO 80 PSIG.	21	---
42-EWH-01	STATE	CSB SERIES	ELECTRIC WATER HEATER, COMMERCIAL GRADE, 119 GALLONS STORAGE, 98 GPH RECOVER AT 100 F RISE, 24 kW, 480 VOLT, 3 PHASE, 60 HZ.	390	---
42-NT-01	ORION	STYLE 5	NEUTRALIZATION TANK, 5 GALLON, 2" INLET AND OUTLET, 1 1/2" VENT CONNECTION.	19	---
42-TP-01	PRECISION PLUMBING PRODUCTS	INC. PRIME-TIME PT-12	ELECTRONIC TRAP PRIMING MANIFOLD, SURFACE MOUNTED, 3/4" NPT INLET, 1/2" TUBE CONNECTIONS, 120 VOLT, 1 PHASE, 60Hz, SERVE FLOOR DRAIN IN MECHANICAL ROOM AND REST ROOM (12 CONNECTION).	2	---
42-TP-02	PRECISION PLUMBING PRODUCTS	INC.PRIME-TIME PT-6	ELECTRONIC TRAP PRIMING MANIFOLD, SURFACE MOUNTED, 3/4" NPT INLET, 1/2" TUBE CONNECTIONS, 120 VOLT, 1 PHASE, 60Hz, SERVE FLOOR DRAIN IN PUMP ROOM (6 CONNECTION).	2	---
42-TP-03	PRECISION PLUMBING PRODUCTS	INC.PRIME-TIME PT-8	ELECTRONIC TRAP PRIMING MANIFOLD, SURFACE MOUNTED, 3/4" NPT INLET, 1/2" TUBE CONNECTIONS, 120 VOLT, 1 PHASE, 60Hz, SERVE FLOOR DRAIN IN PUMP ROOM (8 CONNECTION).	2	---
42-TP-04	PRECISION PLUMBING PRODUCTS	INC.PRIME-TIME PT-8	ELECTRONIC TRAP PRIMING MANIFOLD, SURFACE MOUNTED, 3/4" NPT INLET, 1/2" TUBE CONNECTIONS, 120 VOLT, 1 PHASE, 60Hz, SERVE FLOOR DRAIN IN PUMP ROOM (8 CONNECTION).	2	---

PLUMBING FIXTURE SCHEDULE

UNIT NUMBER	MANUFACTURER	MODEL	DESCRIPTION	WATER (IN)		WASTE (IN)		APPROX WEIGHT (LBS)	NOTES
				HOT	COLD	WASTE	VENT		
ES/EEW-1	HAWS	8336	EMERGENCY SHOWER/EYE WASH COMBINATION, PEDESTAL MOUNTED, CORROSION RESISTANT, 1 1/4" IPS SUPPLY, 120 VOLT.	---	1 1/4"	---	---	---	2,3
EWC-1	ELKAY	EZS8L	ELECTRIC WATER COOLER, WALL MOUNTED, 8 GPH, 120 VOLT, 1 PHASE, 60 HZ.	---	1/2"	1 1/2"	1 1/2"	---	1
L-1	AMERICAN STANDARD	LAV: 0355.012 LUCERNE FAUCET: 605B.205 INNSBROOK	LAVATORY, WALL HUNG 21"x18", WITH SENSOR OPERATED, HARD-WIRED, 0.5 GPM AERATED FAUCET AND POP-UP DRAIN.	1/2"	1/2"	2"	2"	---	1,4
LS-1	---	---	LAB SINK, SEE LAB SPEC SECTION FOR DETAILS.	1/2"	1/2"	2"	2"	---	---
MS-1	SINK: STERN-WILLIAMS FAUCET: AMERICAN STANDARD	SINK: SBC-1725-BP2 FAUCET: 8354.112	MOP SINK, 32"x32", 12" DEEP, FLOOR MOUNTED, DIAGONAL FRONT, TWO SPLASH PANELS.	1/2"	1/2"	3"	2"	---	---
UR-1	AMERICAN STANDARD	CHINA: 6590.001 WASHBROOK VALVE: 606B.051	URINAL, WALL MOUNT, HARD-WIRED FLUSH VALVE, 0.5 GALLON/FLUSH MAX.	---	3/4"	2"	1 1/2"	---	1,4
WC-1	AMERICAN STANDARD	2257.101 AND 606B.161	WATER CLOSET, WALL MOUNT, HARD-WIRED FLUSH VALVE, 120V CONNECTION, WITH TRANSFORMER, 1.6 GALLON/FLUSH MAX.	---	1"	4"	3"	---	1,4

PRESSURE REDUCING VALVE SCHEDULE

UNIT NUMBER	LOCATION	MANUFACTURER	MODEL	SERVICE	TYPE	FLOW RATE (WATER-GPM)			REDUCED PRESSURE SETPOINT(PSI)	INLET PRESSURE (PSI)		MINIMUM PRESSURE AT MAXIMUM FLOW (PSI)	NOTES
						MINIMUM	MAXIMUM	ORDINARY		MINIMUM	MAXIMUM		
42-PRV-01	PUMP STATION	CLA-VAL	MODEL 50-01	WATER	DIRECT ACTING	60	85	60	80.00	80	120	72	---

GENERAL SHEET NOTES

1. SEE DRAWING P-00-001 FOR LEGENDS, ABBREVIATIONS AND GENERAL NOTES.

SCHEDULE NOTES

PIPING ACCESSORIES SCHEDULE:
NOTES: NONE

PLUMBING EQUIPMENT SCHEDULE:
NOTES: NONE

PLUMBING FIXTURE SCHEDULE:

NOTES:
1. FIXTURE AND INSTALLATION SHALL BE ADA COMPLIANT.
2. TEMPERED WATER SUPPLY.
3. REMOTE ALARM SYSTEM. ONE FLOW SWITCH LOCATED IN THE COMMON TEMPERED WATER SUPPLY LINE, UPSTREAM OF ALL BRANCHES TO EMERGENCY FIXTURES.
4. PROVIDE 120V TRANSFORMER MODULE(S) AS REQUIRED FOR NUMBER OF FIXTURES INSTALLED.

PRESSURE REDUCING VALVE SCHEDULE:
NOTES: NONE

BLACK & VEATCH
Black & Veatch Corporation
Kansas City, Missouri

olsson

THIS DOCUMENT WAS ORIGINALLY ISSUED AND SEALED ON JANUARY 24, 2023 BY MICHELE F. ROTH, A LICENSED PROFESSIONAL ENGINEER IN THE STATE OF ARKANSAS, E-17959

BEAVER WATER DISTRICT

WESTERN CORRIDOR PUMP STATION

100% SET

REVISIONS AND RECORD OF ISSUE

DESIGNED:	SAM
DETAILED:	YBM
CHECKED:	ABG
APPROVED:	MFR
DATE:	JANUARY 24, 2023
PROJECT NO.:	405654

PUMP STATION

PLUMBING

PLUMBING - SCHEDULES

P-42-601

(SCALE BAR IS 4" AT FULL SCALE) 0 1/2 1 2 3 4

PLOTTED: 1/20/2023 2:53:44 PM
FILE: BIM 360://405654 - BWD Western Corridor Pump Station/405654-42-PUMP STATION.rvt
D11000

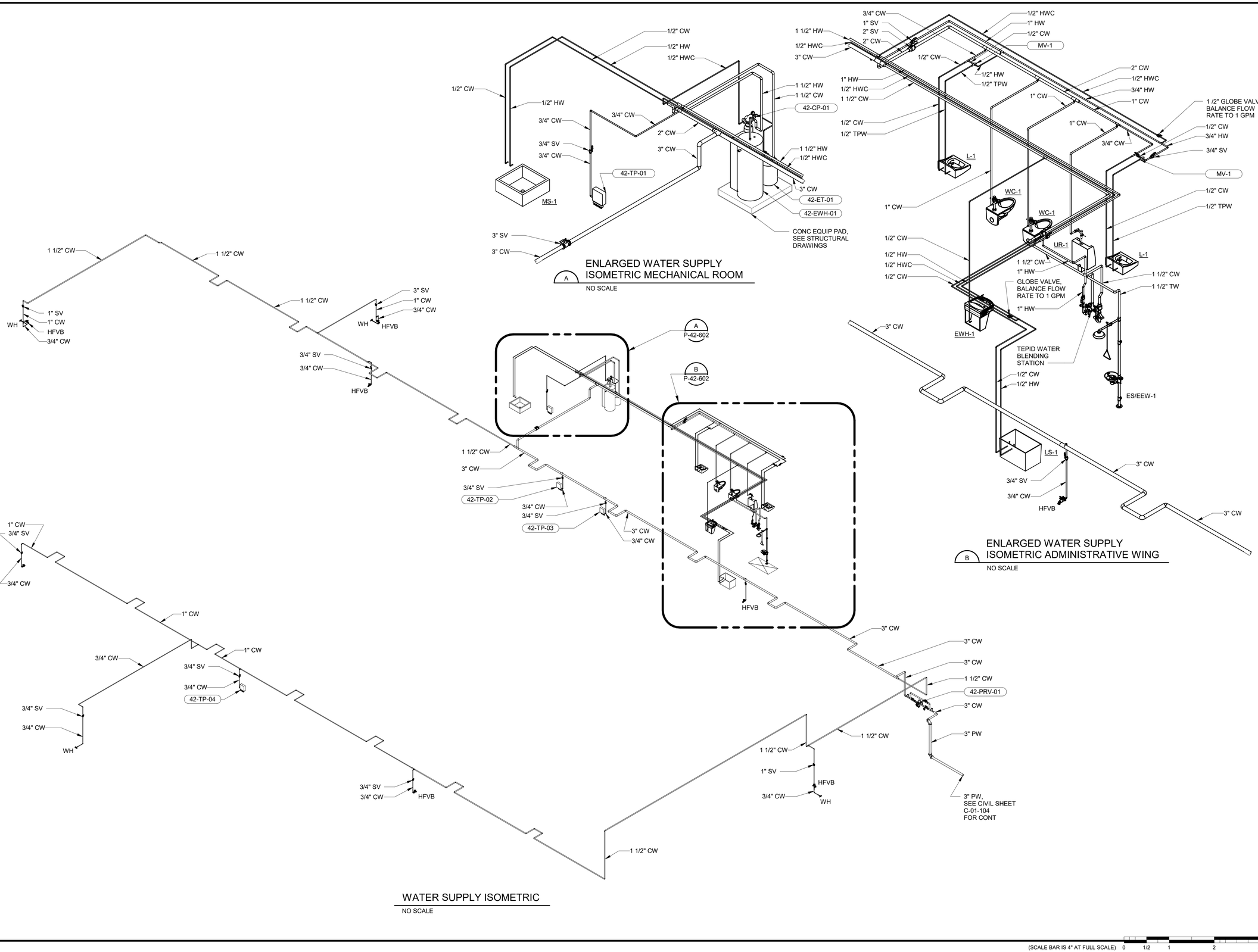

BLACK & VEATCH

Black & Veatch Corporation
Kansas City, Missouri

olsson

THIS DOCUMENT WAS ORIGINALLY ISSUED AND SEALED ON JANUARY 24, 2023 BY MICHELE F. ROTH, A LICENSED PROFESSIONAL ENGINEER IN THE STATE OF ARKANSAS, E-17959

BEAVER WATER DISTRICT

WESTERN CORRIDOR PUMP STATION

100% SET

REVISIONS AND RECORD OF ISSUE	
DESIGNED:	SAM
DETAILED:	YBM
CHECKED:	ABG
APPROVED:	MFR
DATE:	JANUARY 24, 2023
PROJECT NO.:	405654

PUMP STATION

PLUMBING

WATER SUPPLY ISOMETRIC AND ENLARGED ISOMETRICS

P-42-901

96 OF 159

(SCALE BAR IS 4" AT FULL SCALE) 0 1/2 1 2 3 4

PLOTTED: 1/20/2023 2:53:48 PM
FILE: BIM 360://405654 - BWD Western Corridor Pump Station/405654-42-PUMP STATION.rvt
D11000

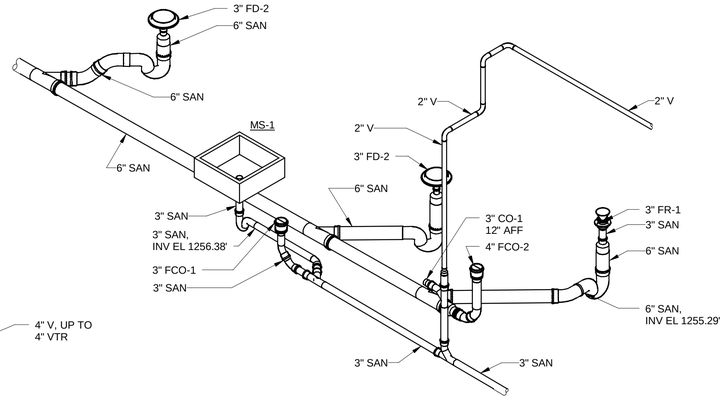

A ENLARGED DRAINAGE SYSTEM ISOMETRIC MECHANICAL ROOM

NO SCALE

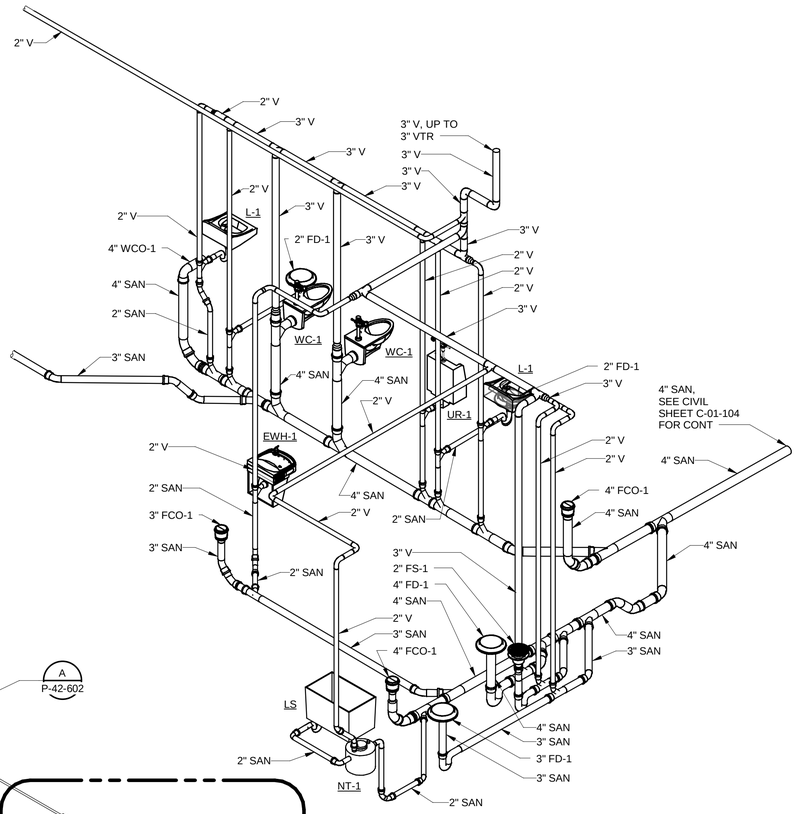

B ENLARGED DRAINAGE SYSTEM ISOMETRIC ADMINISTRATIVE WING

NO SCALE

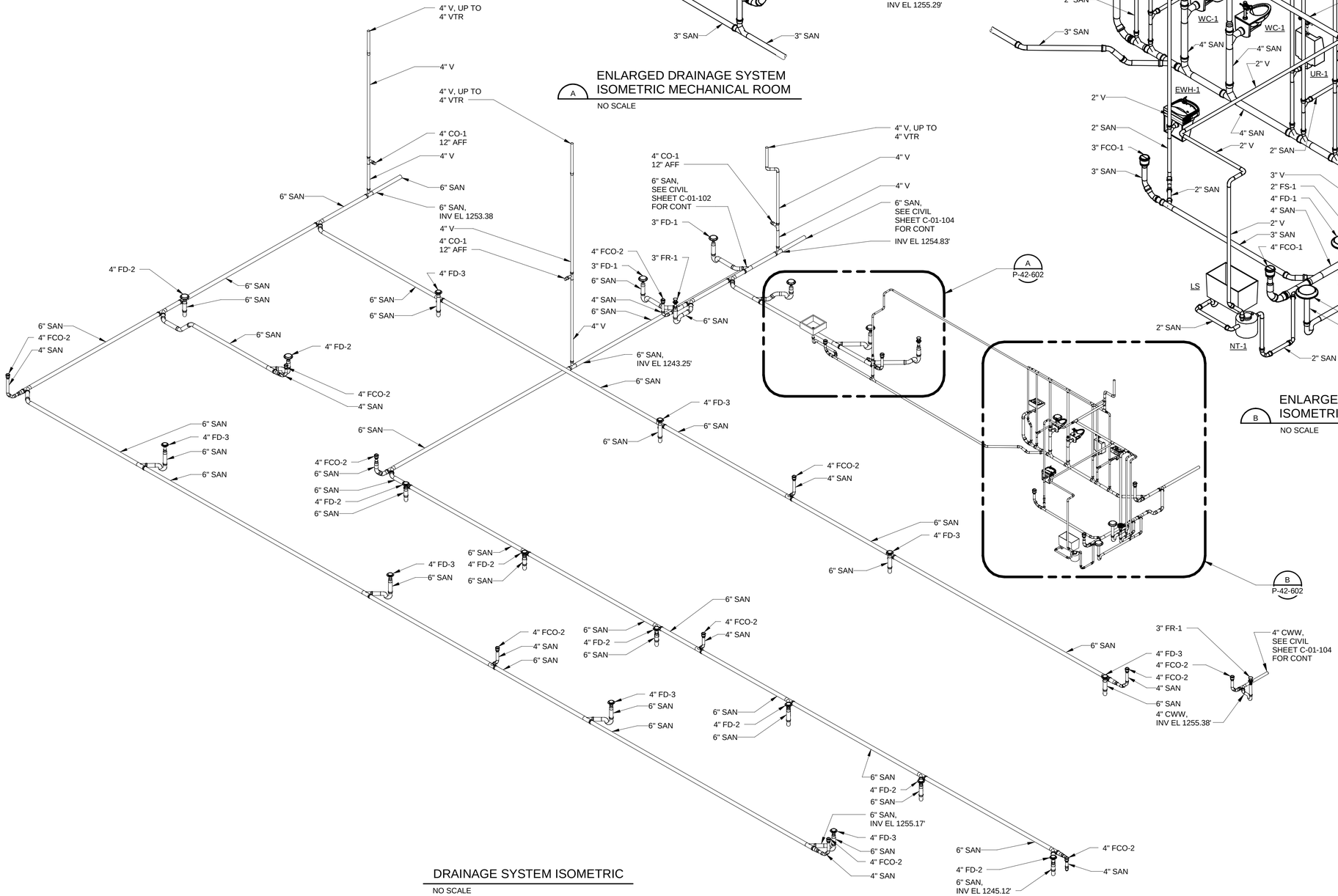

A P-42-602

B P-42-602

DRAINAGE SYSTEM ISOMETRIC

NO SCALE

(SCALE BAR IS 4" AT FULL SCALE) 0 1/2 1 2 3 4

PLOTTED: 1/20/2023 7:33:46 AM
FILE: BIM 360://405654 - BWD Western Corridor Pump Station/405654-42-PUMP STATION.rvt
D11000

BLACK & VEATCH

Black & Veatch Corporation
Kansas City, Missouri

olsson

THIS DOCUMENT WAS ORIGINALLY ISSUED AND SEALED ON JANUARY 24, 2023 BY MICHELE F. ROTH, A LICENSED PROFESSIONAL ENGINEER IN THE STATE OF ARKANSAS, E-17959

BEAVER WATER DISTRICT

WESTERN CORRIDOR PUMP STATION

100% SET

REVISIONS AND RECORD OF ISSUE

DESIGNED:	SAM
DETAILED:	YBM
CHECKED:	ABG
APPROVED:	MFR
DATE:	JANUARY 24, 2023
PROJECT NO.:	405654

PUMP STATION

PLUMBING

DRAINAGE SYSTEM ISOMETRIC AND ENLARGED ISOMETRICS

P-42-902

97 OF 159

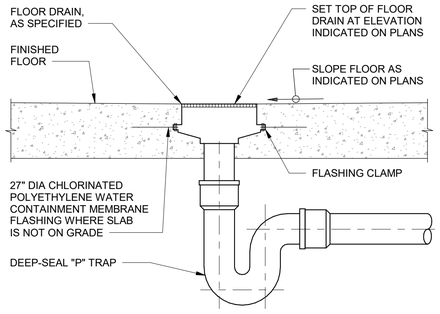

A FLOOR DRAIN - NEW FLOOR

NO SCALE

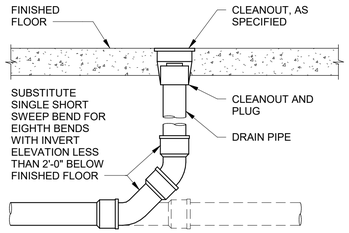

B FLOOR CLEANOUT - NEW FLOOR

NO SCALE

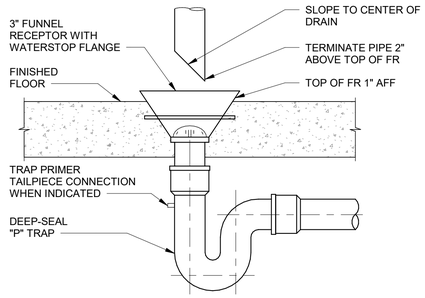

C FUNNEL DRAIN - NEW FLOOR

NO SCALE

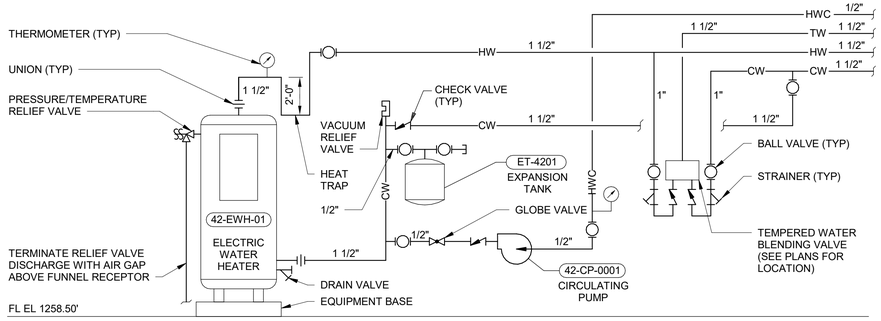

D HOT WATER CIRCULATING SYSTEM SCHEMATIC

NO SCALE

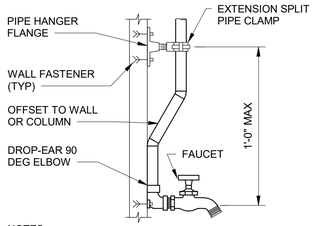

NOTES:
1. PROVIDE VACUUM BREAKER ON HOSE FAUCETS WHERE INDICATED ON THE PLANS.
2. SEE PLANS AND SPECIFICATIONS FOR PIPE DIAMETERS.

E HOSE FAUCET PIPE MOUNTING

NO SCALE

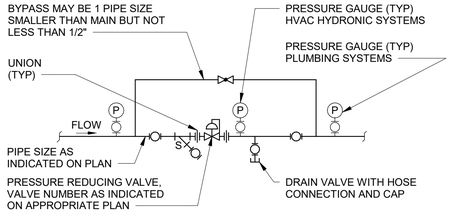

NOTES:
1. PROVIDE REDUCING FITTINGS AT PRESSURE REDUCING VALVE AND ON BYPASS AS REQUIRED.
2. PROVIDE VALVES PER SPECIFICATIONS.

F PRESSURE REDUCING STATION

NO SCALE

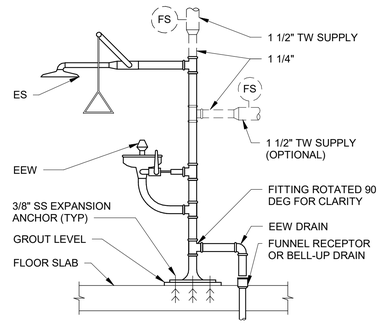

G EMERGENCY SHOWER AND EYE WASH

NO SCALE

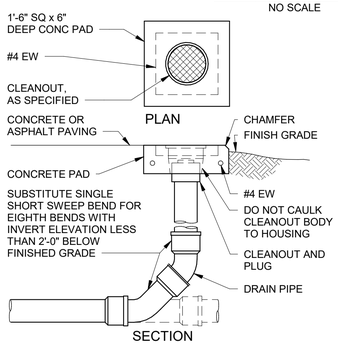

H GRADE CLEANOUT

NO SCALE

BLACK & VEATCH

Black & Veatch Corporation
Kansas City, Missouri

olsson

THIS DOCUMENT WAS ORIGINALLY ISSUED AND SEALED ON JANUARY 24, 2023 BY MICHELE F. ROTH, A LICENSED PROFESSIONAL ENGINEER IN THE STATE OF ARKANSAS, E-17959

BEAVER WATER DISTRICT

WESTERN CORRIDOR PUMP STATION

100% SET

REVISIONS AND RECORD OF ISSUE

DESIGNED:	SAM
DETAILED:	YBM
CHECKED:	ABG
APPROVED:	MFR
DATE:	JANUARY 24, 2023
PROJECT NO.:	405654

STANDARD DETAILS

PLUMBING

DETAILS

P-99-501

98 OF 159

(SCALE BAR IS 4" AT FULL SCALE) 0 1/2 1 2 3 4

PLOTTED: 1/20/2023 3:07:01 PM
FILE: BIM 360://405654 - BWD Western Corridor Pump Station/405654-00-GENERAL.rvt
D11000

ONE-LINE DIAGRAM LEGEND

1500KVA
2.4KV Δ - 480Y/277V
3%Z, 60HZ
TRANSFORMER WITH PRIMARY AND SECONDARY VOLTAGE, AND KVA RATING AS NOTED

CS
4#14,3/4"
20
3P-60
22:3#8,#10G, 4#14,2"
CIRCUIT NO.22 WITH 3#8 INSULATED CONDUCTORS AND 1#10 GROUND WIRE FOR A 20HP MOTOR WITH 3 POLE, 60A, MOTOR DISCONNECT SWITCH AND 4#14 INSULATED CONDUCTORS FOR AUXILIARY ITEM, AS FOR EXAMPLE A CONTROL STATION, ALL IN 2" CONDUIT.

AUXILIARY ITEMS MAY NOT BE COMPLETELY SHOWN
HS
20
3P-60
22:3#8,#10G, 4#14,2"
CONDUCTORS FOR AUXILIARY ITEM SHALL NOT PASS THROUGH MOTOR DISCONNECT SWITCH.

AUXILIARY ITEMS MAY NOT BE COMPLETELY SHOWN
15
ONE-LINE SHOWING POWER AND CONTROL TO A PACKAGE UNIT, AS FOR EXAMPLE A STEAM GENERATOR OR AN AIR HANDLING UNIT, SHALL IMPLY THAT ANY AND ALL ASSOCIATED EQUIPMENT SHALL ALSO BE INSTALLED AND WIRED AS REQUIRED BY THE EQUIPMENT FURNISHED.

INDICATES THAT ALL OR PART OF CIRCUIT MAY BE ROUTED IN DUCT BANK OR UNDERGROUND. CONDUIT SIZE SHOWN ON ONE-LINE IS ABOVE GROUND AND/OR INSIDE OF STRUCTURE. SEE DUCT BANK SCHEDULE AND SECTIONS FOR CONDUIT SIZE OF UNDERGROUND PORTION OF CIRCUIT.

HIGH VOLTAGE DRAWOUT AIR OR VACUUM CIRCUIT BREAKER

3P - 20
LOW VOLTAGE AIR CIRCUIT BREAKER, 3 POLE, 20 AMPERE

S4
SIZE 4 COMBINATION MAGNETIC MOTOR STARTER

LOW VOLTAGE DRAWOUT AIR CIRCUIT BREAKER

HIGH VOLTAGE DRAWOUT CONTACTOR

FUSE AND DISCONNECT SWITCH

S2
SIZE 2 COMBINATION MAGNETIC MOTOR STARTER, REVERSING OR 2 SPEED

S1
SIZE 1 COMBINATION REDUCED VOLTAGE AUTOTRANSFORMER

POTENTIAL TRANSFORMER

CURRENT TRANSFORMER

CURRENT OR POTENTIAL TEST SWITCH

G
GENERATOR

K
KIRK KEY INTERLOCK

E
ELECTRICAL INTERLOCK

R
RESISTOR

59G
PROTECTION RELAY WITH IEEE DEVICE FUNCTION AS SHOWN

V
SINGLE-FUNCTION METER

SURGE OR LIGHTNING ARRESTER

SURGE ARRESTER WITH SURGE CAPACITOR

GROUND CONNECTION

SCHEMATIC SYMBOLS

- WIRE CONNECTION POINT
- EXTERNAL CONNECTION POINT
- NORMALLY OPEN CONTACT
- NORMALLY CLOSED CONTACT
- STARTER, CONTACTOR OR RELAY COIL
- NORMALLY OPEN PUSH BUTTON
- NORMALLY CLOSED PUSH BUTTON
- MAINTAINED PUSH BUTTON
- NORMALLY CLOSED GEARED LIMIT SWITCH
- NORMALLY OPEN GEARED LIMIT SWITCH
- INDICATING LIGHT
- FUSE
- POTENTIOMETER
- CAPACITOR
- DIODE
- RESISTOR
- CONTROL POWER TRANSFORMER
- SWITCH
- MS — MANUAL STARTER
- OL — OVERLOAD
- OVERLOAD
- ELECTRODE
- FLOAT SWITCH (CLOSING ON RISING LEVEL)
- FLOAT SWITCH (OPENING ON RISING LEVEL)
- P — PRESSURE SWITCH (CLOSING ON RISING PRESSURE)
- PRESSURE SWITCH (OPENING ON RISING PRESSURE)
- VACUUM SWITCH (CLOSING ON INCREASING VACUUM)
- VACUUM SWITCH (OPENING ON INCREASING VACUUM)
- TEMPERATURE SWITCH (CLOSING ON RISING TEMPERATURE)
- TEMPERATURE SWITCH (OPENING ON RISING TEMPERATURE)
- FLOW ACTUATED SWITCH (CLOSING ON INCREASE IN FLOW)
- FLOW ACTUATED SWITCH (OPENING ON INCREASE IN FLOW)
- ON TIME DELAY CONTACT (NORMALLY OPEN, WHEN THE COIL IS ENERGIZED THE CONTACT WILL CLOSE AFTER A TIME DELAY)
- ON TIME DELAY CONTACT (NORMALLY CLOSED, WHEN THE COIL IS ENERGIZED THE CONTACT WILL OPEN AFTER A TIME DELAY)
- OFF TIME DELAY CONTACT (NORMALLY OPEN, WHEN THE COIL IS DE-ENERGIZED THE CONTACT WILL OPEN AFTER A TIME DELAY)
- OFF TIME DELAY CONTACT (NORMALLY CLOSED, WHEN THE COIL IS DE-ENERGIZED THE CONTACT WILL CLOSE AFTER A TIME DELAY)
- TORQUE SWITCH (NORMALLY OPEN)
- TORQUE SWITCH (NORMALLY CLOSED)
- LIMIT SWITCH (NORMALLY OPEN)
- LIMIT SWITCH (NORMALLY OPEN, HELD CLOSED)
- LIMIT SWITCH (NORMALLY CLOSED)
- LIMIT SWITCH (NORMALLY CLOSED, HELD OPEN)
- DIFFERENTIAL PRESSURE SWITCH (NORMALLY OPEN, CLOSING ON INCREASING DIFF.)
- DIFFERENTIAL PRESSURE SWITCH (NORMALLY CLOSED, OPENING ON INCREASING DIFF.)

SWITCH & OUTLET SYMBOLS

- S — SINGLE POLE SWITCH
- S_2 — TWO POLE SWITCH
- S_{3A} — THREE-WAY SWITCH CONTROLLING LIGHTS WITH "A" DESIGNATION
- S_4 — FOUR-WAY SWITCH
- S^{C1}_{M} — MOMENTARY SWITCH CONTROLLING CONTACTOR C1
- S^{DM}_{A} — DIMMING WALL SWITCH CONTROLLING LIGHTS WITH "A" DESIGNATION
- S^{OS}_{A} — WALL SWITCH WITH OCCUPANCY SENSOR CONTROLLING LIGHTS WITH "A" DESIGNATION
- DUPLEX RECEPTACLE 120 VOLT
- SIMPLEX RECEPTACLE
- RANGE RECEPTACLE
- TWISTLOCK RECEPTACLE
- 30 — 240V, 1Ø RECEPTACLE, TYPICAL AMPERE RATING NOTED
- 60 — 480V, 3Ø WELDING RECEPTACLE, TYPICAL AMPERE RATING NOTED
- 120 VOLT DUPLEX RECEPTACLE (UPS)
- DUPLEX FLOOR OUTLET
- TELEPHONE OUTLET
- TELEPHONE FLOOR OUTLET
- CX — COAXIAL CABLE OUTLET
- DATA NETWORK OUTLET
- DATA NETWORK FLOOR OUTLET

MISCELLANEOUS SYMBOLS

- STROBE
- HORN & STROBE
- HORN
- T — THERMOSTAT
- J — JUNCTION BOX
- GROUND ROD
- GROUND ROD WITH TEST WELL
- GROUND CONNECTION
- DISCONNECT SWITCH
- COMBINATION STARTER
- POWER PANEL
- LIGHTING PANEL
- MISCELLANEOUS PANEL
- LIGHTING CONTACTOR
- PTZ CAMERA
- FIXED DOME CAMERA
- PE — PHOTOELECTRIC SENSOR, PHOTOCELL
- OS — CEILING MOUNTED OCCUPANCY SENSOR
- OS — WALL MOUNTED OCCUPANCY SENSOR

BREAKER DETAILS

DETAIL A

52
5KV
1200A
49KA
A 5KV CLASS MEDIUM-VOLTAGE, DRAWOUT, VACUUM OR AIR INSULATED CIRCUIT BREAKER WITH A 1,200 AMPERE FRAME. BREAKER HAS A 49,000 AMPERE MAXIMUM FAULT CURRENT INTERRUPTING RATING.

DETAIL B

3P - 50
A LOW VOLTAGE FIXED MOUNTED MOLDED CASE CIRCUIT BREAKER WITH A 50 AMPERE TRIP RATING.
TRIP UNIT IS NON-ADJUSTABLE THERMAL-MAGNETIC TYPE.

1000AT
1200AF
SST
LSIG
AFRD
A LOW VOLTAGE FIXED MOUNTED MOLDED CASE CIRCUIT BREAKER WITH A 1200 AMPERE FRAME AND A 1000 AMPERE TRIP RATING.
TRIP UNIT IS ADJUSTABLE SOLID-STATE TYPE WITH LONG-TIME, SHORT-TIME, INSTANTANEOUS, GROUND FAULT AND ARC-FLASH REDUCTION PROTECTION FEATURES.

DETAIL C

800AT
1000AS
1600AF
AFRD
A LOW VOLTAGE, DRAWOUT, POWER OR INSULATED CASE CIRCUIT BREAKER WITH A 1600A FRAME AND SOLID-STATE TRIP UNIT.
TRIP UNIT HAS A SENSOR MODULE RATED FOR 1000 AMPERES AND WITH A TRIP RATING OF 800 AMPERES AND ARC-FLASH REDUCTION PROTECTION FEATURES.

CONDUIT & WIRING INSTALLATION LEGEND

- CONDUIT EXPOSED
- CONDUIT CONCEALED
- CONDUIT TURNING UP. CONDUIT TURNING DOWN.
- CONDUIT PLUGGED FLUSH. CONDUIT CAPPED.
- L2 - 5 — TYPICAL FOR HOME RUN TO BE ROUTED TO LIGHTING PANEL L2 & CONNECTED TO CIRCUIT #5 (MINIMUM NO. 12 AWG CONDUCTORS AND 3/4" CONDUIT)
- 1 / LP1-1 / A — POLE OR STANCHION MOUNTED LIGHTING FIXTURE. REFER TO NUMBER OR LETTER IN FIXTURE SCHEDULE. POWERED FROM LIGHTING PANEL LP1, CIRCUIT 1. CONTROLLED VIA SWITCH A
- 1 / LP1-1 / A — WALL MOUNTED LIGHTING FIXTURE. REFER TO NUMBER OR LETTER IN FIXTURE SCHEDULE. POWERED FROM LIGHTING PANEL LP1, CIRCUIT 1. CONTROLLED VIA SWITCH A
- 1 / LP1-1 / A — CEILING, PENDANT, OR RECESSED LIGHTING FIXTURE. REFER TO NUMBER OR LETTER IN FIXTURE SCHEDULE. POWERED FROM LIGHTING PANEL LP1, CIRCUIT 1. CONTROLLED VIA SWITCH A
- LP1-3 — RECEPTACLE POWERED FROM LIGHTING PANEL LP1, CIRCUIT 3
- LP1-1 / A / 11 — LINEAR LIGHTING FIXTURE. REFER TO FIXTURE NUMBER IN FIXTURE SCHEDULE. POWERED FROM LIGHTING PANEL LP1, CIRCUIT 1, VIA SWITCH A
- LP1-1 / EX — EXIT LIGHTING FIXTURE. REFER TO FIXTURE NUMBER OR LETTERS IN FIXTURE SCHEDULE. POWERED FROM LIGHTING PANEL LP1, CIRCUIT 1.
- LP1-1 / EM — EMERGENCY LIGHTING FIXTURE. REFER TO FIXTURE NUMBER OR LETTERS IN FIXTURE SCHEDULE. POWERED FROM LIGHTING PANEL LP1, CIRCUIT 1.
- E — E — UNDERGROUND CONCRETE ENCASED ELECTRICAL DUCT BANK
- UNDERGROUND CONCRETE ENCASED ELECTRICAL BANK ROUTED BENEATH SLAB-ON-GRADE
- EE — EE — DIRECT BURIED CONDUIT
- GROUND CONDUCTOR
- UE — UE — UNDERGROUND ELECTRIC
- OH — OH — OVERHEAD CIRCUIT

COMMUNICATION SYMBOLS

- HORN SPEAKER
- DUAL HORN SPEAKER
- WALL MOUNTED CONE SPEAKER
- SK — CEILING MOUNTED CONE SPEAKER

PROTECTION/RELAY DEVICE NUMBERS

25 - SYNCHRONIZING OR SYNCHRONISM-CHECK DEVICE
27 - UNDERVOLTAGE RELAY
32 - DIRECTIONAL POWER RELAY
37 - UNDERCURRENT OR UNDERPOWER RELAY
46 - REV. PHASE OR PHASE-BAL. CURRENT RELAY
47 - PHASE SEQ. OR PHASE BAL. VOLTAGE RELAY
49 - MACHINE OR TRANSFORMER THERMAL RELAY
50 - INSTANTANEOUS OVERCURRENT
51 - AC TIME OVERCURRENT RELAY
52 - AC CIRCUIT BREAKER
59 - OVERVOLTAGE RELAY
63 - PRESSURE SWITCH
64 - GROUND DETECTOR RELAY
67 - AC DIRECTIONAL OVERCURRENT RELAY
71 - LIQUID OR GAS LEVEL RELAY
81 - FREQUENCY RELAY
83 - AUTOMATIC SELECTIVE CONTROL OR TRANSFER RELAY
86 - LOCKOUT RELAY
87 - DIFFERENTIAL PROTECTIVE RELAY

BLACK & VEATCH
Black & Veatch Corporation
Kansas City, Missouri

olsson

THIS DOCUMENT WAS ORIGINALLY ISSUED AND SEALED ON JANUARY 24, 2023 BY KIRK H. IVY, A LICENSED PROFESSIONAL ENGINEER IN THE STATE OF ARKANSAS, E-16494

BEAVER WATER DISTRICT

WESTERN CORRIDOR PUMP STATION

100% SET

REVISIONS AND RECORD OF ISSUE

DESIGNED:	HNE
DETAILED:	RC
CHECKED:	WML
APPROVED:	KHI
DATE:	JANUARY 24, 2023
PROJECT NO.:	405654

GENERAL

ELECTRICAL

LEGENDS

E-00-001

99 OF 159

(SCALE BAR IS 4" AT FULL SCALE) 0 1/2 1 2 3 4

PLOTTED: 1/20/2023 10:23:09 AM
FILE: BIM 360://405654 - BWD Western Corridor Pump Station/405654-00-GENERAL.rvt
D11000

ELECTRICAL GENERAL NOTES

1. SOLID LINES (———————) INDICATE NEW WORK OR EQUIPMENT.
2. SCREENED LINES (▒▒▒▒▒▒▒▒▒▒) INDICATE EXISTING WORK OR EQUIPMENT.
3. DASHED LINES (– – – – – – –) INDICATE FUTURE WORK OR EQUIPMENT.
4. REFER TO INDIVIDUAL DISCIPLINE CONTRACT DRAWINGS FOR ADDITIONAL ABBREVIATIONS, DETAILS, AND GENERAL DESIGN NOTES.
5. LEGEND SHEETS ARE GENERAL. SOME SYMBOLS AND ABBREVIATIONS MAY NOT BE UTILIZED ON THIS SPECIFIC PROJECT.
6. INFORMATION RELATED TO CIRCUIT IDENTIFICATION, WIRE & CONDUIT SIZES, AND ROUTING, IS ON THE FOLLOWING DRAWING TYPES.
   - A. ONE-LINE DIAGRAMS SHOW CIRCUIT IDENTIFICATION, WIRE QUANTITY AND SIZES, AND CONDUIT SIZE WITHIN STRUCTURES. ONE-LINE DIAGRAMS ALSO INDICATE ORIGIN AND DESTINATION OF CIRCUITS, AND IDENTIFY CIRCUITS ROUTED UNDERGROUND.
   - B. FOR CIRCUITS WITHOUT UNDERGROUND PORTIONS, BUILDING FLOOR PLANS SHOW LOCATION OF EQUIPMENT FOR DETERMINING CIRCUIT LENGTH WITHIN THE STRUCTURE. FOR CIRCUITS WITH UNDERGROUND PORTIONS, ANTICIPATED PENETRATION OF UNDERGROUND CONDUITS ARE SHOWN ON STRUCTURE PLANS FOR DETERMINING THE LENGTH OF THE IN-STRUCTURE PORTIONS OF CIRCUITS. BUILDING FLOOR PLANS MAY ALSO SHOW HOME RUNS FOR LIGHTING, RECEPTACLE, AND OTHER MISCELLANEOUS EQUIPMENT CIRCUITS.
   - C. SITE PLANS INDICATE THE GENERAL ROUTING OF UNDERGROUND CONDUITS AND DUCT BANKS. CIRCUITS ROUTED IN UNDERGROUND CONDUITS OR DUCT BANKS ARE INDICATED IN DUCT BANK SECTIONS REFERENCED ON THE SITE PLAN.
   - D. DUCT BANK SECTIONS AND SCHEDULES IDENTIFY CONDUIT SIZE, CONDUIT MATERIAL, ARRANGEMENT OF THE UNDERGROUND CONDUITS, AND CIRCUITS ROUTED IN EACH UNDERGROUND CONDUIT.

AREA DESIGNATIONS

THE SPECIAL AREA DESIGNATION BOXES, AS DEFINED BELOW, ARE LOCATED ON THE PLAN DRAWINGS TO DEFINE ELECTRICAL INSTALLATION REQUIREMENTS. DESIGNATION BOXES ARE LOCATED WITHIN ROOM OR BELOW ROOM NUMBER. ALL INDOOR AREAS NOT INDICATED OTHERWISE ARE AREA TYPE 1 AND MINIMUM NEMA TYPE 1 ENCLOSURES.

AREA TYPE 1A	CORROSIVE CHEMICAL FEED AND STORAGE ROOMS. CONDUIT SYSTEM SHALL BE EXPOSED SCHEDULE 80 PVC RIGID NON-METALLIC CONDUIT WITH PVC FITTINGS, BOXES AND ACCESSORIES.
AREA TYPE 4	INDOOR WET LOCATIONS SUCH AS VAULTS, HOSEDOWN AREAS, BASEMENTS, ETC. MINIMUM NEMA TYPE 4 ENCLOSURE FOR EQUIPMENT AND GASKETED FITTINGS IN A CONDUIT SYSTEM.
AREA TYPE 7A	CLASS I, DIVISION 1 AREA AS DEFINED BY NEC. ALL EQUIPMENT AND CONDUIT SYSTEMS SHALL BE RATED FOR USE IN THIS AREA.
AREA TYPE 7B	CLASS I, DIVISION 2, GROUP C AND D (METHANE, GASOLINE) AS DEFINED BY NEC. EQUIPMENT AND CONDUITS SYSTEMS SHALL BE RATED FOR USE IN THIS AREA.
AREA TYPE 12	INDOOR, DRY, DIRTY AREA. REQUIRES MINIMUM NEMA TYPE 12 GASKETED ENCLOSURES FOR ALL EQUIPMENT AND GASKETED FITTINGS IN CONDUIT SYSTEMS.

GENERAL REQUIREMENTS

1. THE CONTRACTOR SHALL BE RESPONSIBLE FOR ROUTING ALL CONDUITS NOT SHOWN ON THE PLANS. THIS SHALL INCLUDE ALL CONDUITS SHOWN ON THE ONE-LINES AND HOME-RUNS SHOWN ON THE PLAN DRAWINGS. CONDUITS SHALL BE ROUTED AS DEFINED IN THE SPECIFICATIONS.
2. SPARE WIRES SHALL BE TAPED AND COILED AND LABELED TO INDICATE WHERE OTHER END OF SPARE WIRE IS LOCATED.
3. IF EQUIPMENT SUPPLIED BY MANUFACTURER HAS A LARGER LOAD THAN VALUE SHOWN, THE CABLE CONDUIT AND ELECTRICAL EQUIPMENT SHALL BE ENLARGED, AS REQUIRED, TO ACCOMMODATE THE HIGHER VALUE.
4. THE CONTRACTOR SHALL BE RESPONSIBLE FOR FURNISHING PROPERLY SIZED STARTER OVERLOADS FOR EQUIPMENT FURNISHED.
5. LIGHTING AND RECEPTACLE CIRCUITS DESIGNATED ON THE FLOOR PLANS ARE NOT SHOWN ON THE ONE-LINES. CONDUCTORS FOR LIGHTING, RECEPTACLES, AND MISCELLANEOUS 120VAC CIRCUITS SHALL BE MINIMUM NO. 12 AWG. CONDUIT FOR LIGHTING, RECEPTACLES, AND MISCELLANEOUS 120VAC CIRCUITS SHALL BE MINIMUM 3/4".
6. IN AREAS WHERE THERE ARE OVERHEAD BRIDGE CRANES, HOISTS, ETC. NO CONDUITS SHALL BE RUN OVERHEAD THAT WILL INTERFERE WITH THE OPERATION OF THE EQUIPMENT.

ELECTRICAL ABBREVIATIONS

A

A	AMBER, AMPERE, ALARM
AC	ALTERNATING CURRENT
ACB	AIR CIRCUIT BREAKER
ACR	ACCESS CARD READER
AF	AMPERE FRAME
AFD	ADJUSTABLE FREQUENCY DRIVE
AFRD	ARC-FLASH REDUCTION DEVICE
AM	AMMETER
ANN	ANNUNCIATOR
AR	ALARM RELAY
AS	AMMETER SWITCH, AMPERE SENSOR
AT	AMPERE TRIP
ATS	AUTOMATIC TRANSFER SWITCH
AUX	AUXILIARY
AWG	AMERICAN WIRE GAUGE

B

B	BUS
BC	BATTERY CHARGER
BKR	BREAKER
BR	BRAKE
BT	BEARING TEMPERATURE

C

C	CLOSE, COUNTER, CONTACTOR, CONTROL, CCTV CAMERA
CAP	CAPACITOR
CB	CIRCUIT BREAKER
CB"A"	CIRCUIT BREAKER AUXILIARY CONTACT (OPEN WHEN BREAKER IS OPEN)
CB"B"	CIRCUIT BREAKER AUXILIARY CONTACT (CLOSED WHEN BREAKER IS OPEN)
CD	CONTROL DAMPER
CI	CELL INTERLOCK
CKT	CIRCUIT
CL2	CHLORINE
COS	CABLE OPERATED SWITCH
CP	CONTROL PANEL
CPT	CONTROL POWER TRANSFORMER
CR	CURRENT OF CONTROL RELAY, CARD READER
CS	CONTROL STATION
CT	CYCLE TIMER OR CURRENT TRANSFORMER
CTC	CYCLE TIMER CLUTCH
CTM	CYCLE TIMER MONITOR
2/C	2 CONDUCTOR
4"C	4" CONDUIT

D

DC	DIRECT CURRENT, DOOR CONTACT
DI	DOOR INTERLOCK, STRIKE
DM	DAMPER MOTOR, DEMAND METER, DIMMER SWITCH
DPDT	DOUBLE POLE DOUBLE THROW
DPST	DOUBLE POLE SINGLE THROW
DPR	DIFFERENTIAL PRESSURE REGULATOR
DPS	DIFFERENTIAL PRESSURE SWITCH
DS	DISCONNECT SWITCH, DOOR SWITCH, DESKTOP STATION
DVLS	DISCHARGE VALVE LIMIT SWITCH

E

E	ELECTRIC OPERATOR FOR CONTROL DAMPER OR VALVE
EC	EMPTY CONDUIT
EDS	ELECTRICAL DOOR STRIKE
EL	ELEVATION, EMERGENCY LIGHT
EMH	ELECTRICAL MANHOLE
ER	ELECTRODE RELAY
ES	END SWITCH, REQUEST TO EXIT SENSOR
E-STOP	EMERGENCY STOP
ETM	ELAPSED TIME METER
EX	EXISTING
EXP	EXPLOSION PROOF

F

F	FORWARD, FIELD
FO	FIBER OPTIC
FPR	FEEDER PROTECTION RELAY
FS	FLOW SWITCH

G

G	GREEN, GROUND, GENERATOR, GROUND FAULT
GD	GROUND DETECTOR
GEN	GENERATOR
GFCI,GFI	GROUND FAULT CURRENT INTERRUPTOR, GROUND FAULT INTERRUPTOR
GLS	GEARED LIMIT SWITCH
GPR	GENERATOR PROTECTION RELAY
GND	GROUND
#8G	#8 GROUND WIRE

H

H	HIGH, HUMIDISTAT
HH	HANDHOLE
HMT	HIGH MOTOR TEMPERATURE
HOA	HAND-OFF-AUTO
HOR	HAND-OFF-REMOTE
HP	HORSEPOWER
HS	HAND STATION
HWCO	HIGH WATER CUTOFF
HZ	HERTZ (CYCLE)

I

I/O	INPUT/OUTPUT
I	INSTANTANEOUS
IJB	INTERCOM JUNCTION BOX

J

J, JB	JUNCTION BOX

K

K	KEY INTERLOCK
KAIC	THOUSAND AMPERES INTERRUPTING CURRENT
KCMIL	THOUSAND CIRCULAR MIL
KO	KEY OPERATED
KV	KILOVOLT
KVA	KILOVOLT AMPERE
KVAR	KILOVAR
KW	KILOWATT
KWH	KILOWATT HOUR

L

L	LOW, LEVEL, LONG-TIME
LA	LIGHTNING ARRESTER
LAN	LOCAL AREA NETWORK
LC	LIGHTING CONTRACTOR
LCE	LIGHTING CONTACTOR ENCLOSURE
	LIGHTING CONTROL ENCLOSURE
LCP	LOCAL CONTROL PANEL
LCS	LOCAL CONTROL STATION
LOA	LOCAL-OFF-AUTO
LOR	LOCAL-OFF-REMOTE
LOS	LOCK OUT STOP
LP	LIGHTING PANEL
LS	LIMIT OR LEVEL SWITCH
LTG	LIGHTING
LWCO	LOW WATER CUTOFF

M

M	MAGNETIC MOTOR STARTER
MA	MILLIAMPERE
MCB	MAIN CIRCUIT BREAKER
MCC	MOTOR CONTROL CENTER
MCLU	MOTOR CONTROL LINEUP
MD	MOISTURE DETECTOR, MOTION DETECTOR
MDL	MAGNETIC DOOR LOCK
MFR	MANUFACTURER
MH	MANHOLE, MOUNTING HEIGHT
MOV	MOTOR OPERATED VALVE
MPR	MOTOR PROTECTION RELAY
MS	MANUAL MOTOR STARTER
MSH	MOTOR SPACE HEATER
MTS	MANUAL TRANSFER SWITCH
MV	MILLIVOLT, MEDIUM VOLTAGE
MVA	MEGAVOLT AMPERE

N

N	NEUTRAL
NGR	NEUTRAL GROUNDING RESISTOR
NGT	NEUTRAL GROUNDING TRANSFORMER
NC	NORMALLY CLOSED
NO	NORMALLY OPEN, NUMBER

O

O	OPEN
OL	OVERLOAD
OOA	ON-OFF-AUTO
OOR	ON-OFF-REMOTE
OS	OCCUPANCY SENSOR
O/U	OVER/UNDER

P

P	PRIMARY, POWER, POLE
PCS	PLANT CONTROL SYSTEM
PB	PUSH BUTTON, PULL BOX
PE	PHOTOELECTRIC SENSOR, PHOTOCELL
PF	POWER FACTOR
PFCC	POWER FACTOR CORRECTION CAPACITOR
PH	PHASE
PL	PILOT LIGHT
PLC	PROGRAMMABLE LOGIC CONTROLLER
PP	POWER PANEL
PR	PAIR
PRS	PROXIMITY SWITCH
PS	PRESSURE SWITCH
PT	POTENTIAL TRANSFORMER, PROGRAM TIMER

Q

	NOT USED

R

R	RED, RAISE, RELAY, REVERSE
RECP	RECEPTACLE
RES	RESISTOR
RH	REMOTE HANDSET
RT	REPEATING TIMER
RTD	RESISTANCE TEMPERATURE DETECTOR
RTU	REMOTE TERMINAL UNIT
RVSS	REDUCED VOLTAGE SOLID STATE STARTER

S

S	SHORT-TIME, SHIELDED, STARTER
SA	SURGE ARRESTER, SPEAKER AMPLIFIER
SCADA	SUPERVISORY CONTROL AND DATA ACQUISITION
SF6	SULFUR HEXAFLOURIDE
SH	SPACE HEATER
SN	SOLID NEUTRAL
SO	SOLENOID OILER
SP	SINGLE POLE
SPD	SURGE PROTECTION DEVICE
SPDT	SINGLE POLE DOUBLE THROW
SPST	SINGLE POLE SINGLE THROW
SS	SELECTOR SWITCH, START/STOP, STAINLESS STEEL
SSM	SOLID-STATE METERING
SSS	SOLID STATE STARTER
SST	SOLID-STATE TRIP
SUPV	SUPERVISORY CONTROL
SV	SOLENOID VALVE
SWB,SWBD	SWITCHBOARD
SWG,SWGR	SWITCHGEAR

T

T	THERMOSTAT, TIMER, TOTALIZER, TRANSFORMER
TACH	TACHOMETER
TB	TERMINAL BLOCK
TC	TIMER CLUTCH
TD	TIME DELAY RELAY
TEMP	TEMPERATURE
TM	TIMER MOTOR
TQ	TORQUE
TR	TIMER RELAY, TRIAD
TS	TEMPERATURE SWITCH
TTB	TELEPHONE TERMINAL BOARD

U

UG	UNDERGROUND
UPS	UNINTERRUPTIBLE POWER SUPPLY

V

V	VOLTS, VOLTAGE RESTRAINED
VA	VOLT AMPERE
VAR	VARMETER
VFD	VARIABLE FREQUENCY DRIVE
VI	VACUUM INTERRUPTER
VLS	VALVE LIMIT SWITCH
VM	VOLTMETER
VPI	VALVE POSITION INDICATOR
VS	VOLTMETER SWITCH

W

W	WHITE, WATTS
WH	WATTHOUR METER
WM	WATT METER
WP	WEATHERPROOF
WPI	WEATHERPROOF IN-USE
WS	WALL STATION

X

X	AUXILIARY RELAY
XFMR	TRANSFORMER
XP	EXPLOSION PROOF

Y

Y	YELLOW

Z

Z	AUXILIARY RELAY, IMPEDANCE
ZS	POSITION SWITCH
ZSS	ZERO SPEED SWITCH
1-1PR#16S	ONE, SINGLE PAIR, TWISTED SHIELDED #16 CABLE
3-7/C#14	THREE, SINGLE, SEVEN CONDUCTOR #14 MULTICONDUCTOR CONTROL CABLES

BLACK & VEATCH

Black & Veatch Corporation
Kansas City, Missouri

olsson

THIS DOCUMENT WAS ORIGINALLY ISSUED AND SEALED ON JANUARY 24, 2023 BY KIRK H. IVY, A LICENSED PROFESSIONAL ENGINEER IN THE STATE OF ARKANSAS, E-16494

BEAVER WATER DISTRICT

WESTERN CORRIDOR PUMP STATION

100% SET

REVISIONS AND RECORD OF ISSUE

DESIGNED:	HNE
DETAILED:	RC
CHECKED:	WML
APPROVED:	KHI
DATE:	JANUARY 24, 2023
PROJECT NO.:	405654

GENERAL

ELECTRICAL

ABBREVIATIONS & NOTES

E-00-002

100 OF 159

(SCALE BAR IS 4" AT FULL SCALE) 0 1/2 1 2 3 4

PLOTTED: 1/20/2023 10:26:18 AM
FILE: BIM 360://405654 - BWD Western Corridor Pump Station/405654-00-GENERAL.rvt
D11000

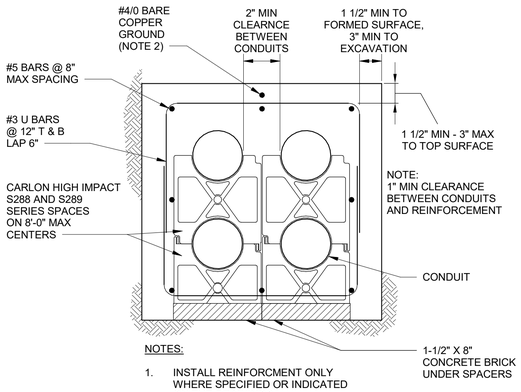

NOTES:

1. INSTALL REINFORCMENT ONLY WHERE SPECIFIED OR INDICATED ON THE DRAWINGS.
2. GROUND CONDUCTOR SHALL MAINTAIN EARTH CONTACT THROUGHOUT THE DUCT BANK RUN. GROUND CONDUCTOR SHALL BE BONDED TO EACH GROUND RING AT THE ORIGIN AND TERMINUS OF THE DUCT BANK ROUTE. GROUND CONDUCTOR SHALL BE BONDED TO THE GROUNDING SYSTEMS OF MANHOLES AND HANDHOLES.

A DUCT BANK - SECTION

NO SCALE

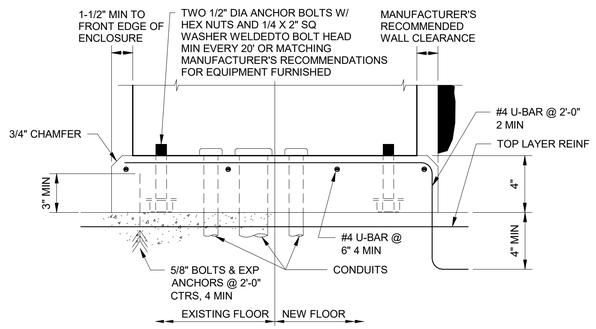

NOTE:

UNLESS OTHERWISE NOTED, ALL INDOOR FLOOR MOUNTED ELECTRICAL EQUIPMENT, INCLUDING SWITCHGEAR, SWITCHBOARDS, MOTOR CONTROL CENTERS, ADJUSTABLE FREQUENCY DRIVES, INSTRUMENT CABINETS, ETC., SHALL BE PROVIDED WITH EQUIPMENT BASES.

B ELECTRICAL EQUIPMENT BASE

NO SCALE

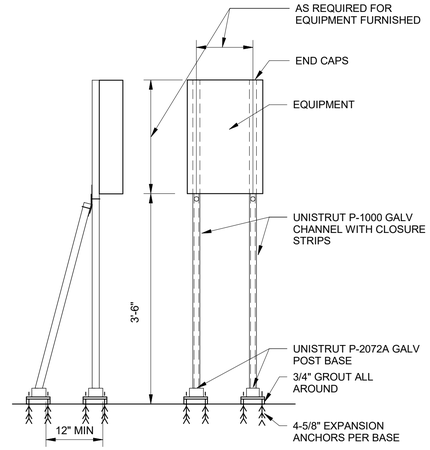

NOTE:

IN OUTDOOR LOCATIONS, USE STAINLESS STEEL BOLTS, NUTS, WASHERS, AND ANCHOR BOLTS.

C ELECTRICAL EQUIPMENT MOUNTING

NO SCALE

NOTE:

REINFORCING SHALL BE PROVIDED FOR A DISTANCE OF 5 FEET FROM THE STRUCTURE WALL.

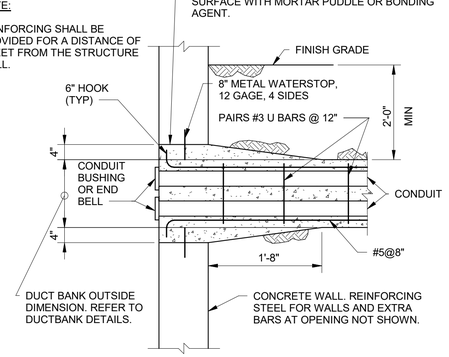

D DUCT BANK - ENTRANCE

NO SCALE

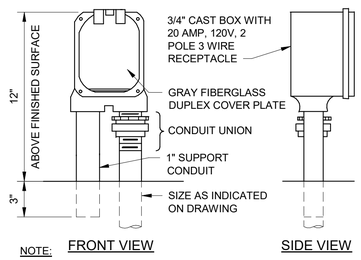

NOTE:

ALL EXPOSED CONDUIT SHALL BE PVC COATED RIGID STEEL.

E RECEPTACLE - WEATHERPROOF MOUNTING

NO SCALE

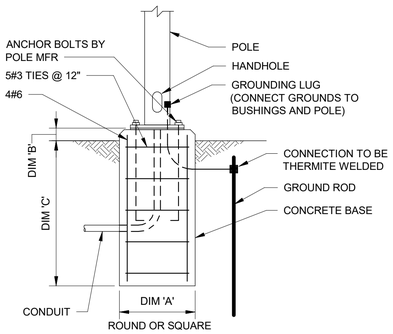

A	B	C	POLE LENGTH
1'-0"	2"	3'-0"	10' TO 12'
1'-6"	2"	4'-0"	12' TO 20'
2'-0"	2"	5'-0"	20' TO 40'
2'-0"	2"-6"	5'-0"	20' TO 40'

F POLE MOUNTING

NO SCALE

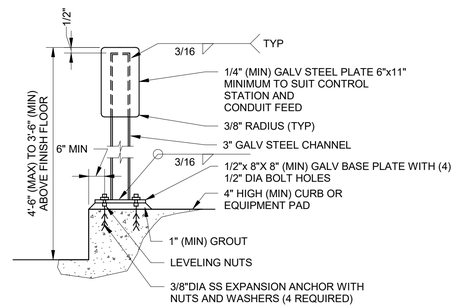

G CONTROL STATION - MOUNTING

NO SCALE

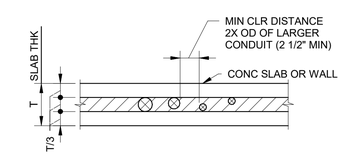

NOTES:

1. PLACE CONDUIT ONLY IN SHADED AREA.
2. FOR CONDUIT REQUIREMENTS SEE THE ELECTRICAL DRAWINGS AND SPECIFICATIONS.

H CONDUIT - PLACING IN SLAB

NO SCALE

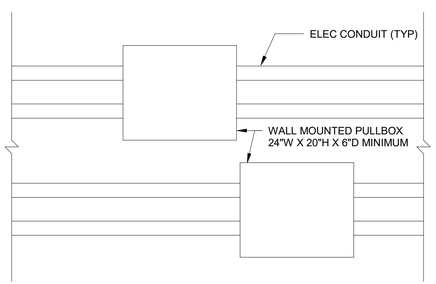

AA PUMP STATION TRENCH PULLBOX DETAIL

NO SCALE

NOTE:

1. SEE SHEETS E-00-001 AND E-00-002 FOR ELECTRICAL LEGENDS AND ABBREVIATIONS & NOTES.

(SCALE BAR IS 4" AT FULL SCALE) 0 1/2 1 2 3 4

BLACK & VEATCH

Black & Veatch Corporation
Kansas City, Missouri

olsson

THIS DOCUMENT WAS ORIGINALLY ISSUED AND SEALED ON JANUARY 24, 2023 BY KIRK H. IVY, A LICENSED PROFESSIONAL ENGINEER IN THE STATE OF ARKANSAS, E-16494

BEAVER WATER DISTRICT

WESTERN CORRIDOR PUMP STATION

100% SET

REVISIONS AND RECORD OF ISSUE

DESIGNED:	HNE
DETAILED:	RC
CHECKED:	WML
APPROVED:	KHI
DATE:	JANUARY 24, 2023
PROJECT NO.:	405654

GENERAL

ELECTRICAL

DETAILS (1 OF 4)

E-00-501

101 OF 159

PLOTTED: 1/20/2023 9:11:48 AM
FILE: BM 360://405654 - BWD Western Corridor Pump Station/405654-00-GENERAL.rvt
D11000

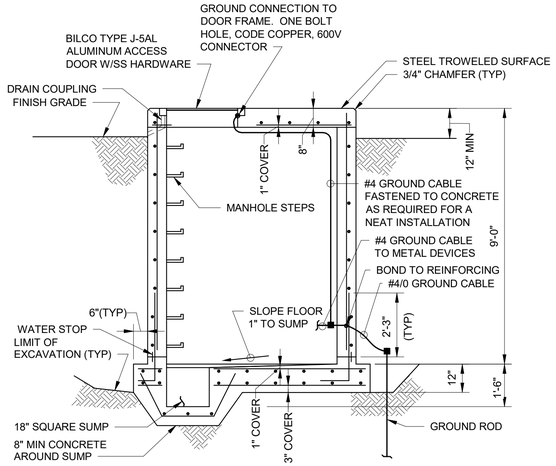

ELECTRICAL MANHOLE NOTES:

1. CABLE AND CONDUIT SUPPORTS SHALL BE SPACED AT 2'-0" HORIZONTAL CENTERS IN WALLS AND SHALL BEGIN 2'-0" FROM FLOOR.
2. SUPPORTS IN CEILINGS SHALL RUN FROM WALL TO WALL.
3. OPENING SHALL BE PROVIDED IN MANHOLE WALLS FOR CONDUIT BANK ENTRANCE AS REQUIRED.
4. ALL REINFORCING ON THIS DETAIL SHALL BE #5@12" UNLESS NOTED OTHERWISE. CENTER VERTICAL REINFORCING IN THE WALLS.
5. CONCRETE TO BE ROUGH AND CLEAN AT CONSTRUCTION JOINT FACES.

NOT SUITABLE FOR ROADWAY LOCATIONS

I MANHOLE - SECTION
NO SCALE

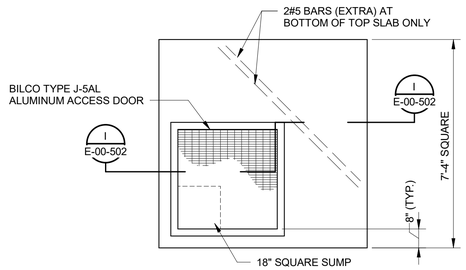

J MANHOLE - SINGLE CHAMBER
NO SCALE

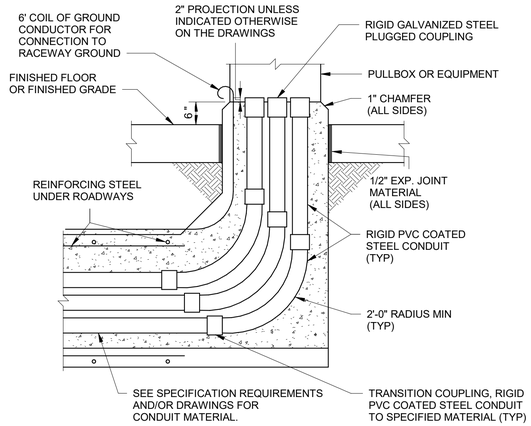

M DUCT BANK - RISER CONSTRUCTION
NO SCALE

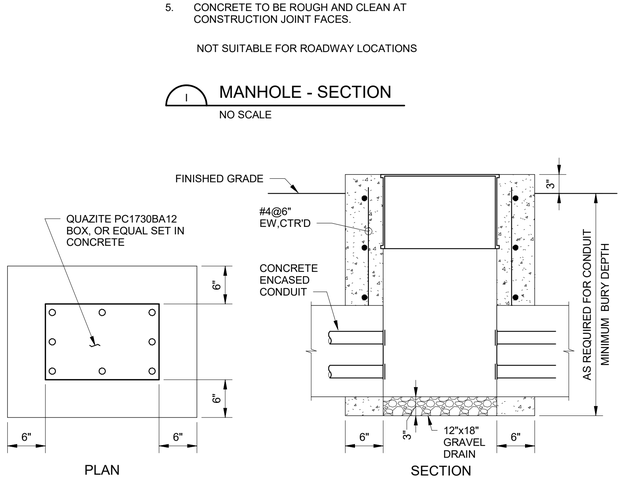

L UNDERGROUND PULL BOX
NO SCALE

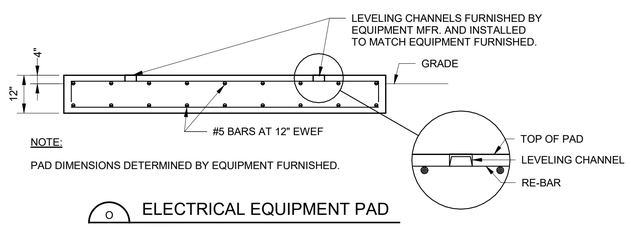

NOTE:

PAD DIMENSIONS DETERMINED BY EQUIPMENT FURNISHED.

O ELECTRICAL EQUIPMENT PAD
NO SCALE

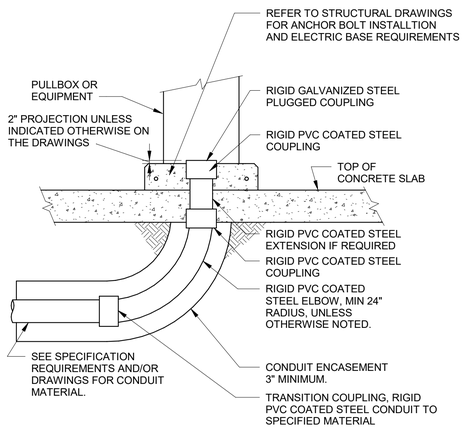

P CONDUIT - RISER TERMINATING IN CONCRETE SLAB WITH EQUIPMENT BASE
NO SCALE

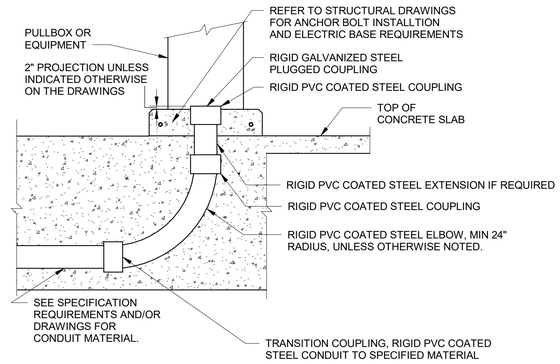

AH TYPICAL EMBEDDED CONDUIT RISER TERMINATING IN FOUNDATION WITH EQUIPMENT BASE
NO SCALE

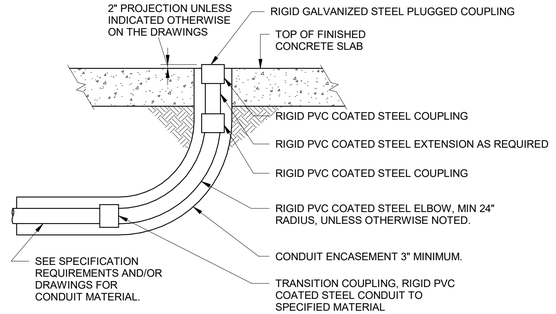

N CONDUIT - RISER TERMINATING IN CONCRETE SLAB
NO SCALE

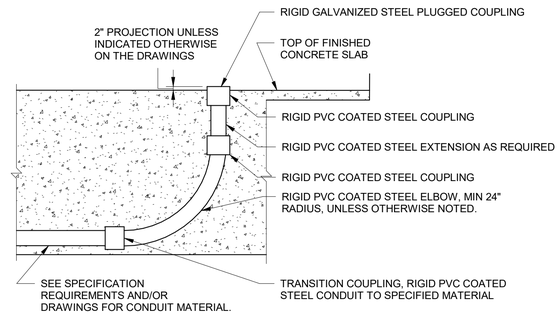

AE TYPICAL EMBEDDED CONDUIT RISER TERMINATING IN FOUNDATION
NO SCALE

NOTE:

1. SEE SHEETS E-00-001 AND E-00-002 FOR ELECTRICAL LEGENDS AND ABBREVIATIONS & NOTES.

(SCALE BAR IS 4" AT FULL SCALE) 0 1/2 1 2 3 4

PLOTTED: 1/20/2023 9:13:03 AM
FILE: BIM 360://405654 - BWD Western Corridor Pump Station/405654-00-GENERAL.rvt
D11000

BLACK & VEATCH
Black & Veatch Corporation
Kansas City, Missouri

olsson

THIS DOCUMENT WAS ORIGINALLY ISSUED AND SEALED ON JANUARY 24, 2023 BY KIRK H. IVY, A LICENSED PROFESSIONAL ENGINEER IN THE STATE OF ARKANSAS, E-16494

BEAVER WATER DISTRICT

WESTERN CORRIDOR PUMP STATION

100% SET

REVISIONS AND RECORD OF ISSUE

DESIGNED:	HNE
DETAILED:	RC
CHECKED:	WML
APPROVED:	KHI
DATE:	JANUARY 24, 2023
PROJECT NO.:	405654

GENERAL

ELECTRICAL

DETAILS (2 OF 4)

E-00-502

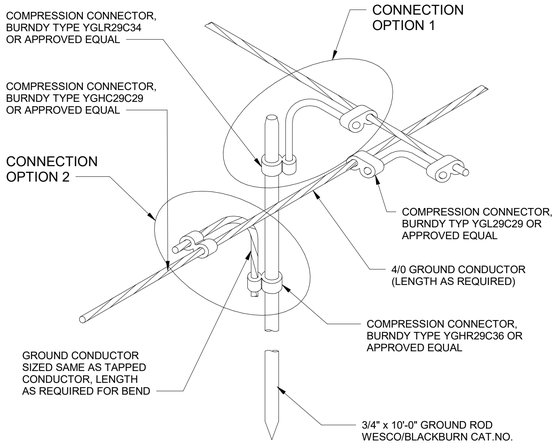

NOTE:

CONTRACTOR SHALL APPLY AN OXIDE-INHIBITING JOINT COMPOUND TO THE INSIDE CONTACT SURFACE OF THE COMPRESSION CONNECTORS PRIOR TO INSTALLING THE COMPRESSION CONNECTORS.

W GROUND ROD CONNECTION

NO SCALE (TWO CONNECTION OPTIONS SHOWN)

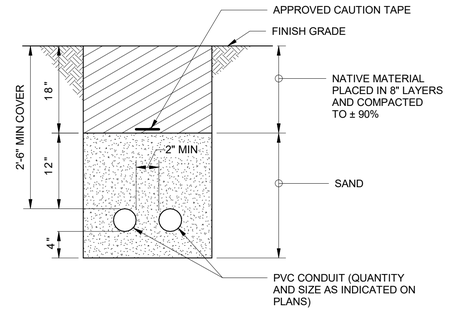

X TYPICAL DIRECT BURIED CONDUIT SECTION

NO SCALE

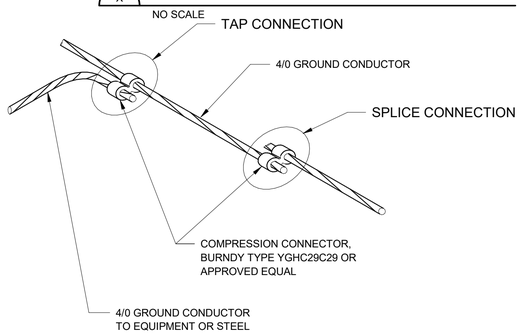

NOTE:

CONTRACTOR SHALL APPLY AN OXIDE-INHIBITING JOINT COMPOUND TO THE INSIDE CONTACT SURFACE OF THE COMPRESSION CONNECTOR PRIOR TO INSTALLING THE COMPRESSION CONNECTOR.

T GROUND - COMPRESSION FITTING TEE CONNECTION

NO SCALE

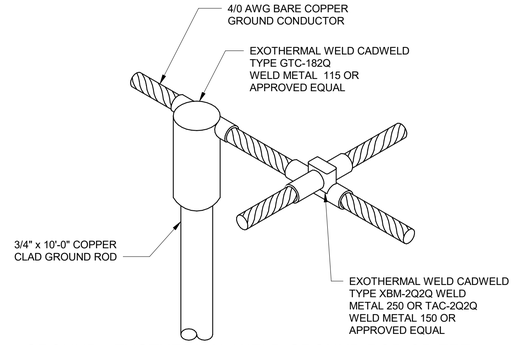

R GROUND - EXOTHERMAL WELD GROUND ROD OR TEE CONNECTION

NO SCALE

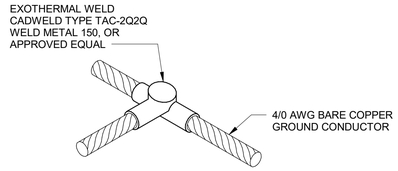

U GROUND - EXOTHERMAL WELD TEE

NO SCALE

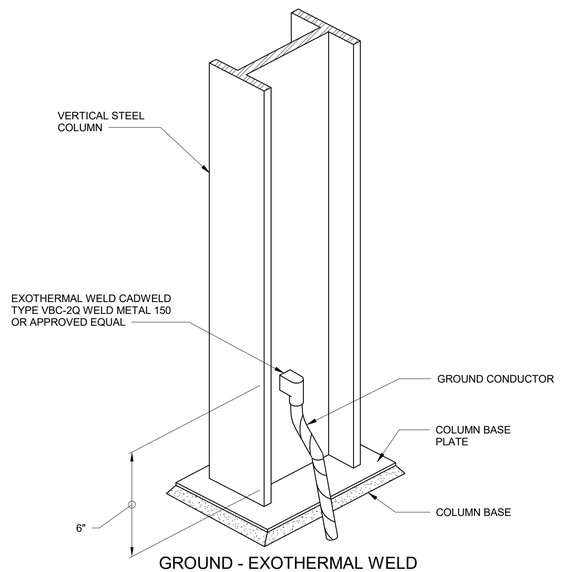

V GROUND - EXOTHERMAL WELD STRUCTURE COLUMN GROUNDING

NO SCALE

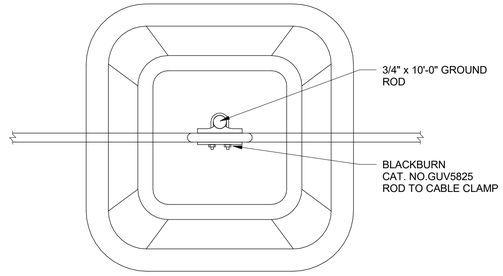

PLAN

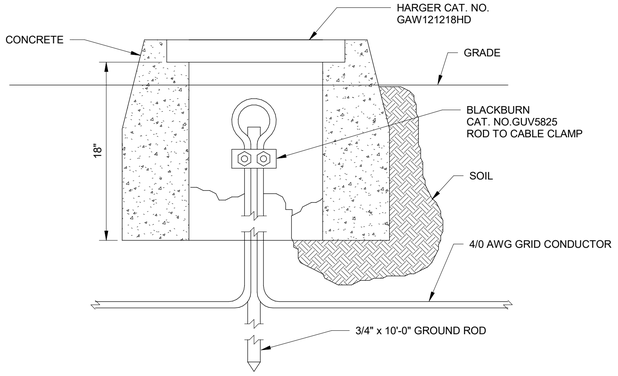

S GROUND TEST STATION

NO SCALE

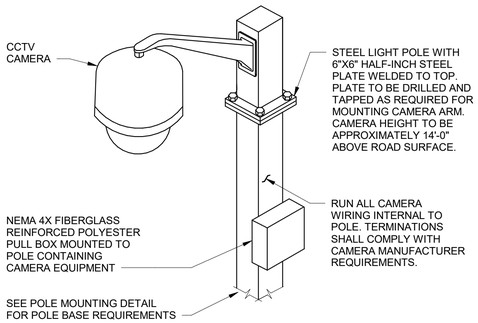

AD SECURITY CAMERA POLE MOUNTING INSTALLATION DETAIL

NO SCALE

NOTE:

1. SEE SHEETS E-00-001 AND E-00-002 FOR ELECTRICAL LEGENDS AND ABBREVIATIONS & NOTES.

(SCALE BAR IS 4" AT FULL SCALE) 0 1/2 1 2 3 4

PLOTTED: 1/20/2023 9:14:34 AM
FILE: BIM 360://405654 - BWD Western Corridor Pump Station\405654-00-GENERAL.rvt
D11000

BLACK & VEATCH

Black & Veatch Corporation
Kansas City, Missouri

olsson

THIS DOCUMENT WAS ORIGINALLY ISSUED AND SEALED ON JANUARY 24, 2023 BY KIRK H. IVY, A LICENSED PROFESSIONAL ENGINEER IN THE STATE OF ARKANSAS, E-16494

BEAVER WATER DISTRICT

WESTERN CORRIDOR PUMP STATION

100% SET

REVISIONS AND RECORD OF ISSUE

DESIGNED:	HNE
DETAILED:	RC
CHECKED:	WML
APPROVED:	KHI
DATE:	JANUARY 24, 2023
PROJECT NO.:	405654

GENERAL

ELECTRICAL

DETAILS (3 OF 4)

E-00-503

103 OF 159

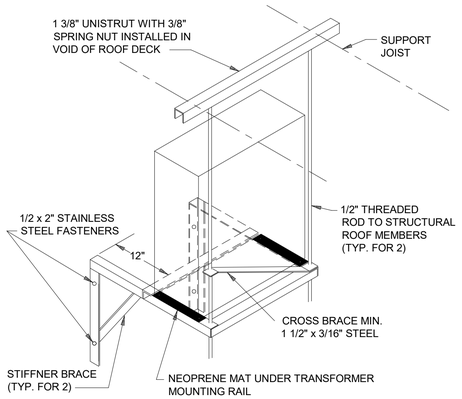

NOTES:

1. FRAME TO BE MINIMUM 2"x 2"x 1/4"
2. FULL WELD AT ALL JOINTS.
3. EPOXY ENAMEL PAINT ASSEMBLY PRIOR TO INSTALLATION

W TYPICAL WALL MOUNTED TRANSFORMER SUPPORT FOR UP TO 50KVA UNITS

NO SCALE

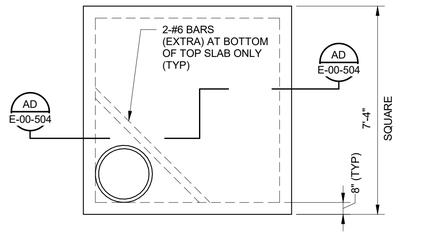

TYPICAL TRAFFIC RATED ELECTRICAL MANHOLE

NO SCALE SUITABLE FOR ROADWAY LOCATIONS

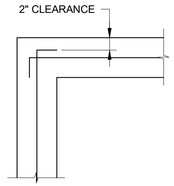

AF CORNER REINFORCING PLAN

NO SCALE

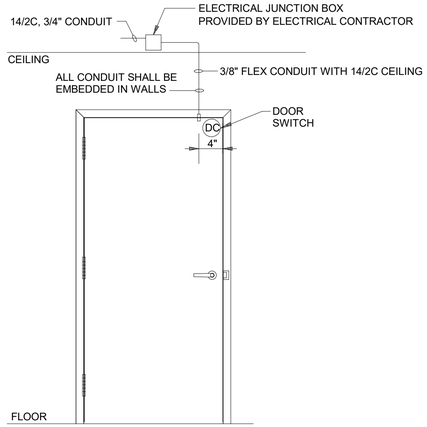

SECURE SIDE VIEW

Y SINGLE DOOR DOOR SWITCH MOUNTING DETAIL

NO SCALE

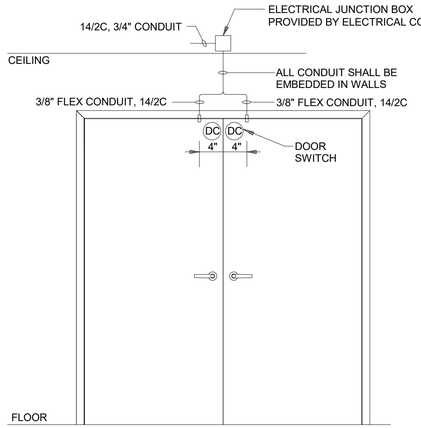

INTERIOR VIEW

Z DOUBLE DOOR DOOR SWITCH MOUNTING DETAIL

NO SCALE

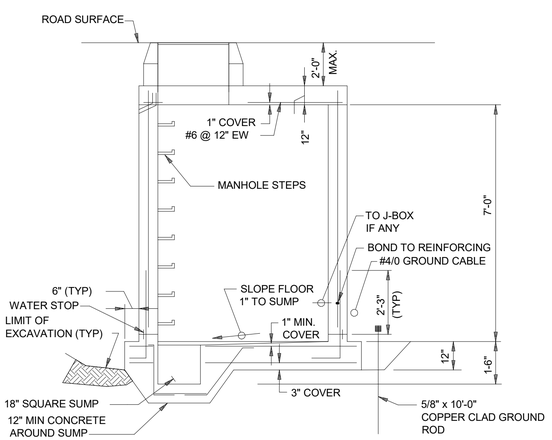

ELECTRICAL MANHOLE NOTES:

1. CABLE AND CONDUIT SUPPORTS SHALL BE SPACED AT 2'-0" HORIZONTAL CENTERS IN WALLS AND SHALL BEGIN 2'-0" FROM FLOOR.
2. SUPPORTS IN CEILINGS SHALL RUN FROM WALL TO WALL.
3. OPENING SHALL BE PROVIDED IN MANHOLE WALLS FOR CONDUIT BANK ENTRANCE AS REQUIRED.
4. ALL REINFORCING ON THIS DETAIL SHALL BE #6@12" UNLESS NOTED OTHERWISE. CENTER VERTICAL REINFORCING IN THE WALLS.
5. CONCRETE TO BE ROUGH AND CLEAN AT CONSTRUCTION JOINT FACES.

AD TRAFFIC RATED ELECTRICAL MANHOLE SECTION

NO SCALE

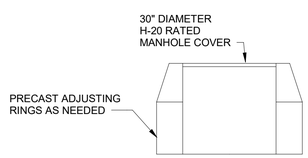

MANHOLE COVER

NO SCALE

NOTE:

1. SEE SHEETS E-00-001 AND E-00-002 FOR ELECTRICAL LEGENDS AND ABBREVIATIONS & NOTES.

(SCALE BAR IS 4" AT FULL SCALE) 0 1/2 1 2 3 4

BLACK & VEATCH
Black & Veatch Corporation
Kansas City, Missouri

olsson

THIS DOCUMENT WAS ORIGINALLY ISSUED AND SEALED ON JANUARY 24, 2023 BY KIRK H. IVY, A LICENSED PROFESSIONAL ENGINEER IN THE STATE OF ARKANSAS, E-16494

BEAVER WATER DISTRICT

WESTERN CORRIDOR PUMP STATION

100% SET

REVISIONS AND RECORD OF ISSUE

DESIGNED:	HNE
DETAILED:	RC
CHECKED:	WML
APPROVED:	KHI
DATE:	JANUARY 24, 2023
PROJECT NO.:	405654

GENERAL

ELECTRICAL

DETAILS (4 OF 4)

E-00-504

104 OF 159

PLOTTED: 1/20/2023 9:18:11 AM
FILE: BIM 360://405654 - BWD Western Corridor Pump Station/405654-00-GENERAL.rvt
D1:1000

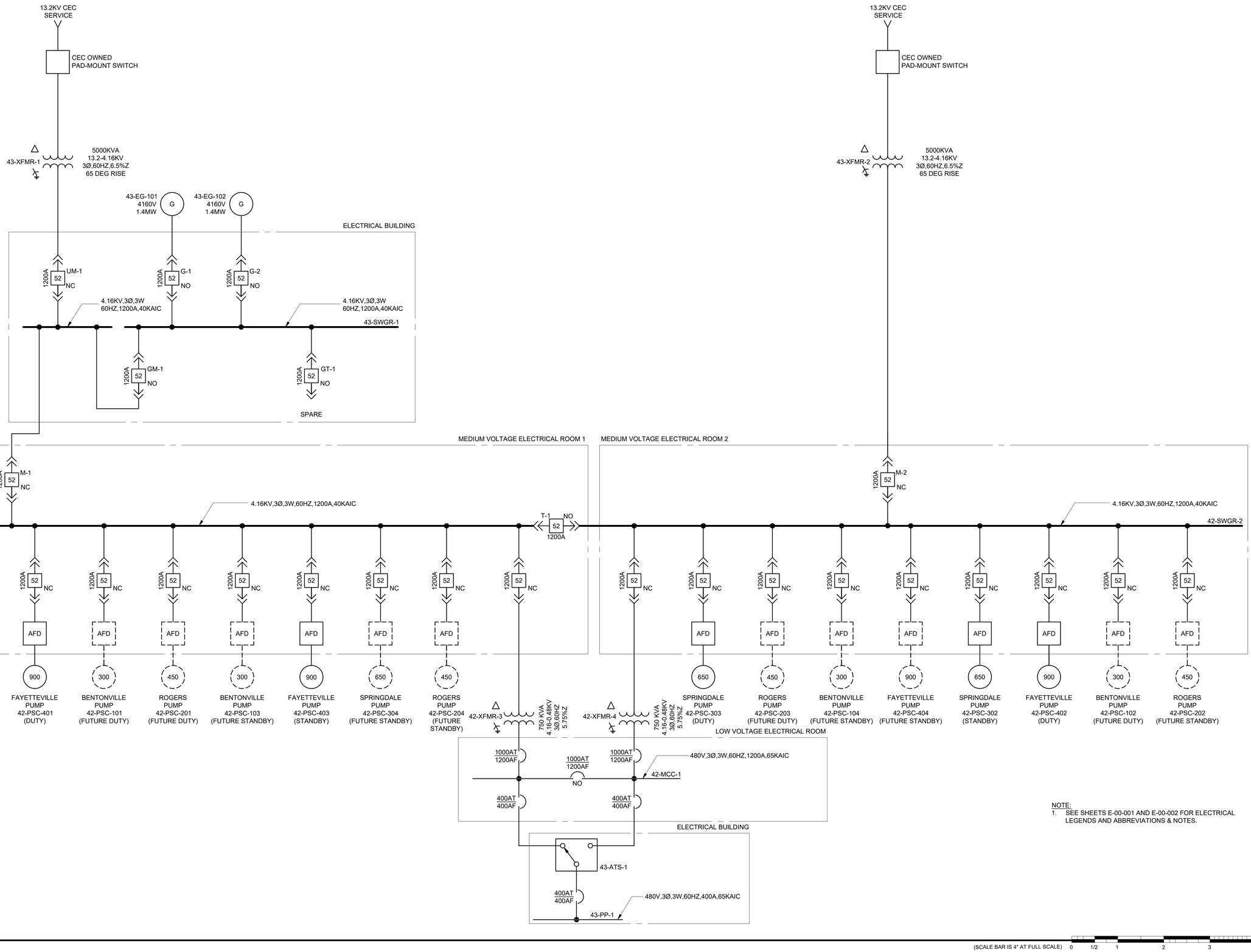

NOTE:
1. SEE SHEETS E-00-001 AND E-00-002 FOR ELECTRICAL LEGENDS AND ABBREVIATIONS & NOTES.

(SCALE BAR IS 4" AT FULL SCALE) 0 1/2 1 2 3 4

PLOTTED: 1/20/2023 11:51 AM FILE: C:\pw_working\bvw_america\d1129188IE-00-601.dwg
PLOTTED: FROM: FILE:

BLACK & VEATCH
Black & Veatch Corporation
Kansas City, Missouri

olsson

THIS DOCUMENT WAS ORIGINALLY ISSUED AND SEALED ON JANUARY 24, 2023 BY KIRK H. IVY, A LICENSED PROFESSIONAL ENGINEER IN THE STATE OF ARKANSAS, E-16494

BEAVER WATER DISTRICT

WESTERN CORRIDOR PUMP STATION

100% SET

REVISIONS AND RECORD OF ISSUE

DESIGNED:	HNE
DETAILED:	RC
CHECKED:	WML
APPROVED:	KHI
DATE:	JANUARY 24, 2023
PROJECT NO.:	405654

GENERAL

ELECTRICAL

POWER DISTRIBUTION FUNCTIONAL DIAGRAM

E-00-601

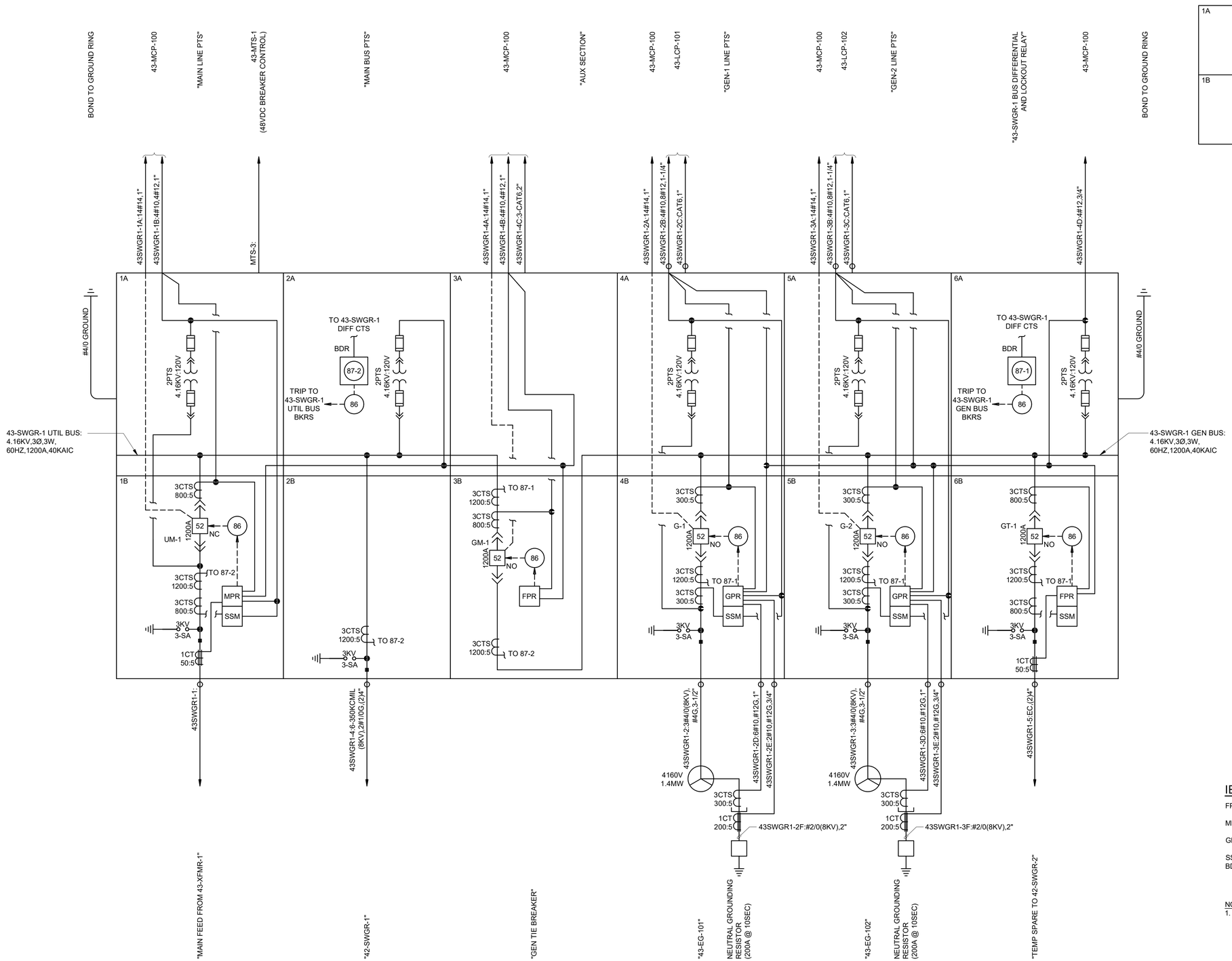

4.16KV 43-SWGR-1
ONE-LINE DIAGRAM

1A	2A	3A	4A	5A	6A
1B	2B	3B	4B	5B	6B

4.16KV 43-SWGR-1
FRONT ELEVATION
NO SCALE

IEEE DEVICE LEGENDS:

FPR	FEEDER DIGITAL PROTECTIVE RELAY (50P,50G,51P,51G)
MPR	MAIN DIGITAL PROTECTIVE RELAY (25,27,32,50P,50G,51P,51G,59P,81O,81U)
GPR	GENERATOR DIGITAL PROTECTIVE RELAY (25G,27,32,40,46,50P,50G,51P,51G,59P,81O,81U,87)
SSM	SOLID STATE METERING
BDR	BUS DIFFERENTIAL PROTECTIVE RELAY

NOTE:
1. SEE SHEETS E-00-001 AND E-00-002 FOR ELECTRICAL LEGENDS AND ABBREVIATIONS & NOTES.

(SCALE BAR IS 4" AT FULL SCALE) 0 1/2 1 2 3 4

PLOTTED: 1/23/2023 7:49:07 AM
FILE: C:\PW_WORKING\BVW_AMERICAS\D1129188E-00-602.DWG
FD11000
D11000

BLACK & VEATCH
Black & Veatch Corporation
Kansas City, Missouri

olsson

THIS DOCUMENT WAS ORIGINALLY ISSUED AND SEALED ON JANUARY 24, 2023 BY KIRK H. IVY, A LICENSED PROFESSIONAL ENGINEER IN THE STATE OF ARKANSAS, E-16494

BEAVER WATER DISTRICT

WESTERN CORRIDOR PUMP STATION

100% SET

REVISIONS AND RECORD OF ISSUE

DESIGNED:	HNE
DETAILED:	RC
CHECKED:	WML
APPROVED:	KHI
DATE:	JANUARY 24, 2023
PROJECT NO.:	405654

ELECTRICAL BUILDING

ELECTRICAL

4.16KV 43-SWGR-1
ONE-LINE DIAGRAM

E-00-602

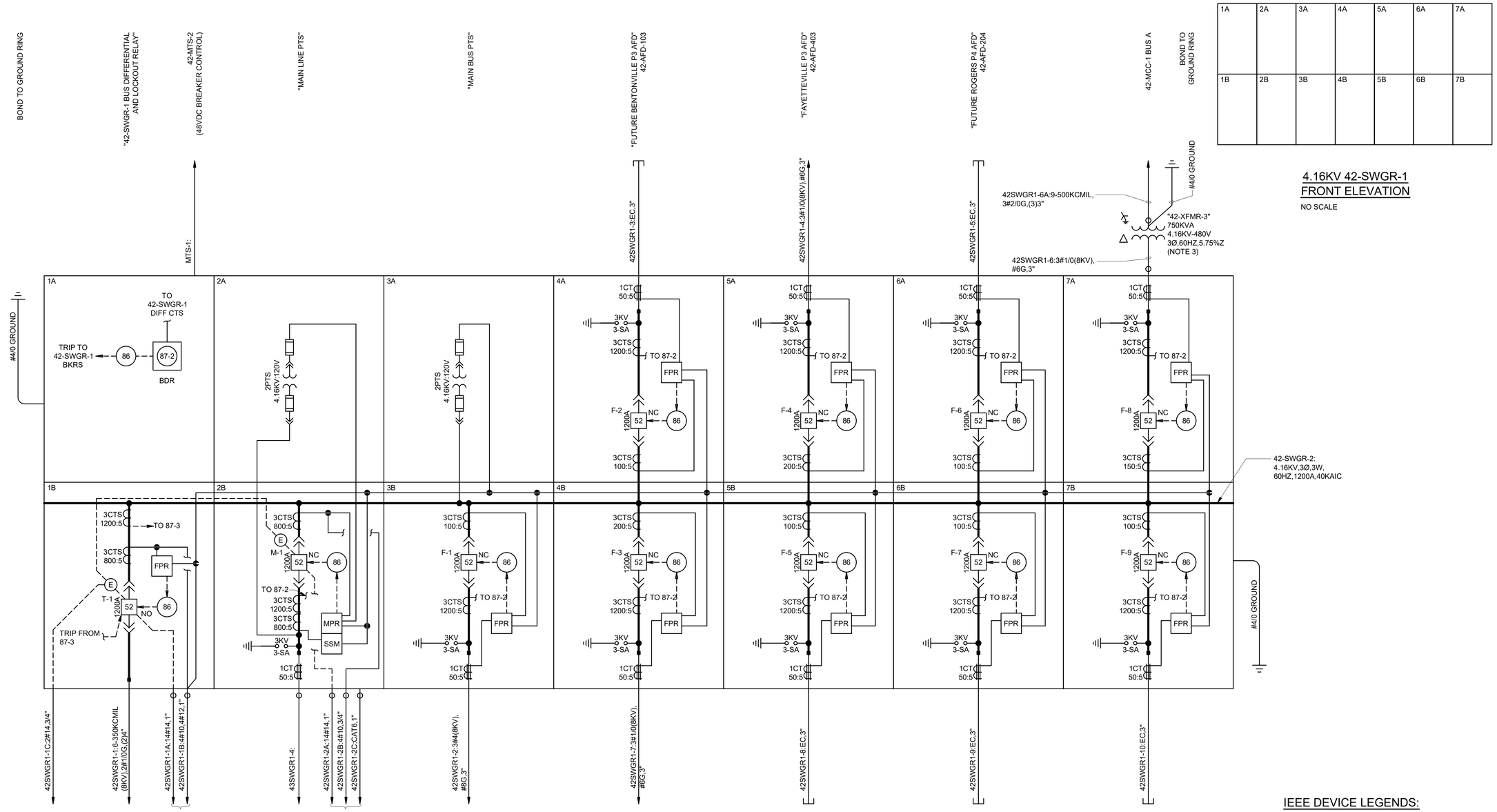

4.16KV 42-SWGR-1
ONE-LINE DIAGRAM

4.16KV 42-SWGR-1
FRONT ELEVATION
NO SCALE

IEEE DEVICE LEGENDS:

FPR	FEEDER DIGITAL PROTECTIVE RELAY (50P,50G,51P,51G)
MPR	MAIN DIGITAL PROTECTIVE RELAY (25,27,32,50P,50G,51P,51G,59P,81O,81U)
GPR	GENERATOR DIGITAL PROTECTIVE RELAY (25G,27,32,40,46,50P,50G,51P,51G,59P,81O,81U,87)
SSM	SOLID STATE METERING
BDR	BUS DIFFERENTIAL PROTECTIVE RELAY

NOTES:
1. SEE SHEETS E-00-001 AND E-00-002 FOR ELECTRICAL LEGENDS AND ABBREVIATIONS & NOTES.
2. ALL EMPTY CONDUITS SHALL BE CAPPED AT LOCATION OF FUTURE EQUIPMENT AS SHOWN ON ONE-LINES AND PLAN DRAWINGS. ALL EMPTY CONDUITS SHALL BE EQUIPPED WITH PULLSTRINGS.
3. TRANSFORMER SHALL BE FURNISHED BY THE OWNER TO BE INSTALLED BY THE CONTRACTOR.

(SCALE BAR IS 4" AT FULL SCALE) 0 1/2 1 2 3 4

BLACK & VEATCH
Black & Veatch Corporation
Kansas City, Missouri

olsson

THIS DOCUMENT WAS ORIGINALLY ISSUED AND SEALED ON JANUARY 24, 2023 BY KIRK H. IVY, A LICENSED PROFESSIONAL ENGINEER IN THE STATE OF ARKANSAS, E-16494

BEAVER WATER DISTRICT

WESTERN CORRIDOR PUMP STATION

100% SET

REVISIONS AND RECORD OF ISSUE

DESIGNED:	HNE
DETAILED:	RC
CHECKED:	WML
APPROVED:	KHI
DATE: JANUARY 24, 2023	
PROJECT NO.:	405654

PUMP STATION

ELECTRICAL

4.16KV 42-SWGR-1
ONE-LINE DIAGRAM

E-00-603

PLOTTED: 1/23/2023 8:03:28 AM
FILE: C:\PW_WORKING\BVW_AMERICAS\D1129188\E-00-603.DWG
FD11000
D11000

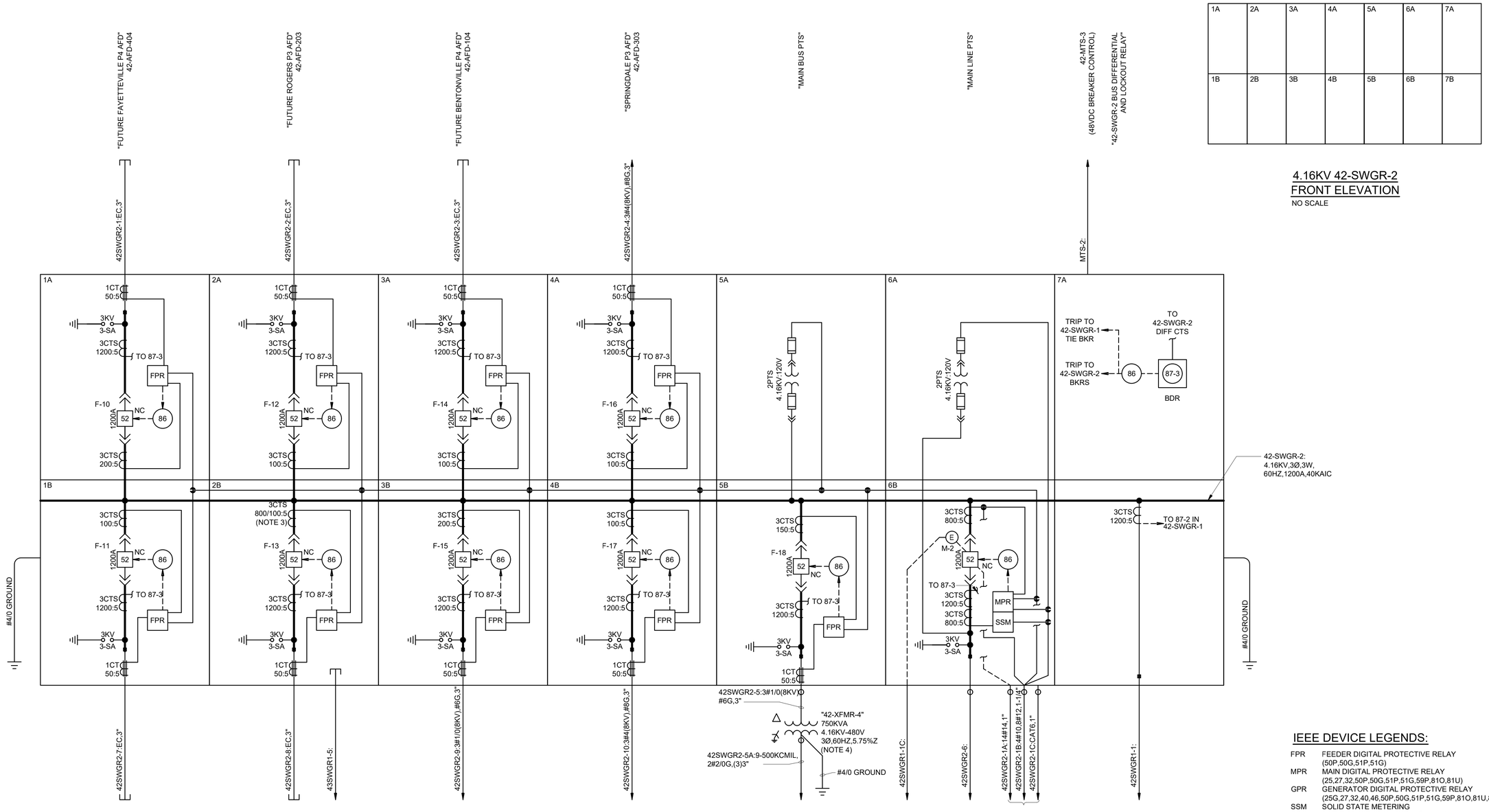

4.16KV 42-SWGR-2
ONE-LINE DIAGRAM

1A	2A	3A	4A	5A	6A	7A
1B	2B	3B	4B	5B	6B	7B

4.16KV 42-SWGR-2
FRONT ELEVATION
NO SCALE

IEEE DEVICE LEGENDS:

FPR	FEEDER DIGITAL PROTECTIVE RELAY (50P,50G,51P,51G)
MPR	MAIN DIGITAL PROTECTIVE RELAY (25,27,32,50P,50G,51P,51G,59P,81O,81U)
GPR	GENERATOR DIGITAL PROTECTIVE RELAY (25G,27,32,40,46,50P,50G,51P,51G,59P,81O,81U,87)
SSM	SOLID STATE METERING
BDR	BUS DIFFERENTIAL PROTECTIVE RELAY

NOTES:
1. SEE SHEETS E-00-001 AND E-00-002 FOR ELECTRICAL LEGENDS AND ABBREVIATIONS & NOTES.
2. ALL EMPTY CONDUITS SHALL BE CAPPED AT LOCATION OF FUTURE EQUIPMENT AS SHOWN ON ONE-LINES AND PLAN DRAWINGS. ALL EMPTY CONDUITS SHALL BE EQUIPPED WITH PULL STRINGS.
3. MULTIRATIO CT SHALL BE SET AT 800:5 FOR TEMPORARY BACKUP POWER FROM 43-SWGR-1.
4. TRANSFORMER SHALL BE FURNISHED BY THE OWNER TO BE INSTALLED BY THE CONTRACTOR.

(SCALE BAR IS 4" AT FULL SCALE) 0 1/2 1 2 3 4

BLACK & VEATCH
Black & Veatch Corporation
Kansas City, Missouri

olsson

THIS DOCUMENT WAS ORIGINALLY ISSUED AND SEALED ON JANUARY 24, 2023 BY KIRK H. IVY, A LICENSED PROFESSIONAL ENGINEER IN THE STATE OF ARKANSAS, E-16494

BEAVER WATER DISTRICT

WESTERN CORRIDOR PUMP STATION

100% SET

REVISIONS AND RECORD OF ISSUE

DESIGNED:	HNE
DETAILED:	RC
CHECKED:	WML
APPROVED:	KHI
DATE: JANUARY 24, 2023	
PROJECT NO.:	405654

PUMP STATION

ELECTRICAL

4.16KV 42-SWGR-2
ONE-LINE DIAGRAM

E-00-604

PLOTTED: 1/23/2023 8:05:35 AM
FILE: C:\PW_WORKING\BVW_AMERICAS\D1129188\E-00-604.DWG
FD11000
D11000

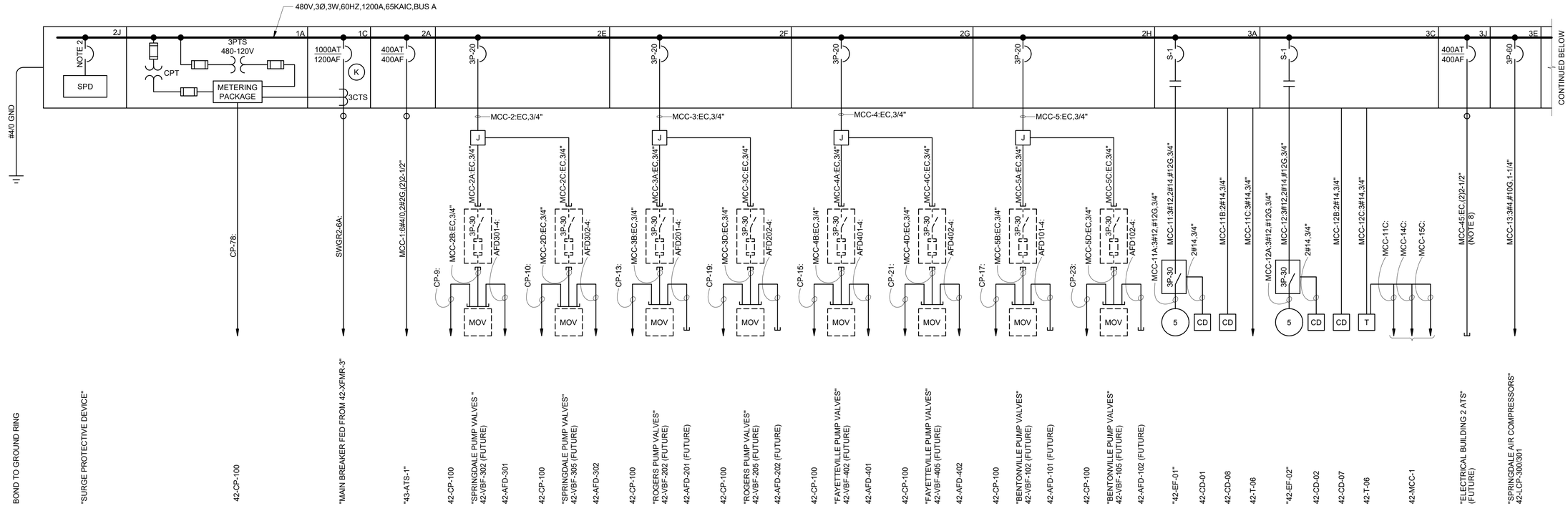

42-MCC-1 ONE-LINE DIAGRAM

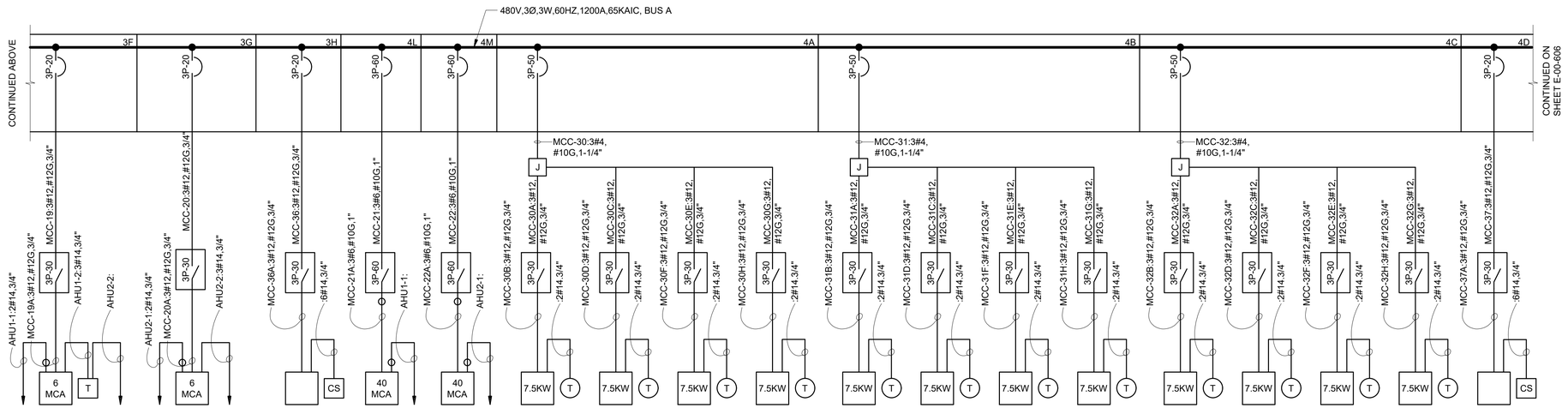

42-MCC-1 ONE-LINE DIAGRAM (CONTINUED)

NOTES:

1. SEE SHEETS E-00-001 AND E-00-002 FOR ELECTRICAL LEGENDS AND ABBREVIATIONS & NOTES.
2. RATING OF CIRCUIT BREAKER SHALL BE PER THE RECOMMENDATION OF THE MANUFACTURER.
3. MCC NAMEPLATE WORDING IS SHOWN IN QUOTATION MARKS (" ") ON THE ONE-LINE DIAGRAM.
4. MAIN AND TIE CIRCUIT BREAKERS SHALL BE KEY INTERLOCKED SUCH THAT ALL THREE BREAKERS CANNOT BE CLOSED AT THE SAME TIME.
5. ALL EMPTY CONDUITS SHALL BE CAPPED AT LOCATION OF FUTURE EQUIPMENT AS SHOWN ON ONE-LINES AND PLAN DRAWINGS. ALL EMPTY CONDUITS SHALL BE EQUIPPED WITH PULLSTRINGS.
6. NOT USED.
7. SEE HVAC DRAWINGS FOR LOCATION OF THERMOSTATS.
8. CONDUITS SHALL BE CAPPED WITHIN MANHOLE LVEMH-1.

(SCALE BAR IS 4" AT FULL SCALE) 0 1/2 1 2 3 4

PLOTTED: 1/20/2023 10:56:53 AM
FILE: C:\PV_WORKING\BVW_AMERICAS\D1129188\E-00-605.DWG
PS11000
D1100

BLACK & VEATCH
Black & Veatch Corporation
Kansas City, Missouri

olsson

THIS DOCUMENT WAS ORIGINALLY ISSUED AND SEALED ON JANUARY 24, 2023 BY KIRK H. IVY, A LICENSED PROFESSIONAL ENGINEER IN THE STATE OF ARKANSAS, E-16494

BEAVER WATER DISTRICT

WESTERN CORRIDOR PUMP STATION

100% SET

REVISIONS AND RECORD OF ISSUE

DESIGNED:	HNE
DETAILED:	RC
CHECKED:	WML
APPROVED:	KHI
DATE:	JANUARY 24, 2023
PROJECT NO.:	405654

PUMP STATION

ELECTRICAL

42-MCC-1
ONE-LINE DIAGRAM
(1 OF 2)

E-00-605

109
OF
159

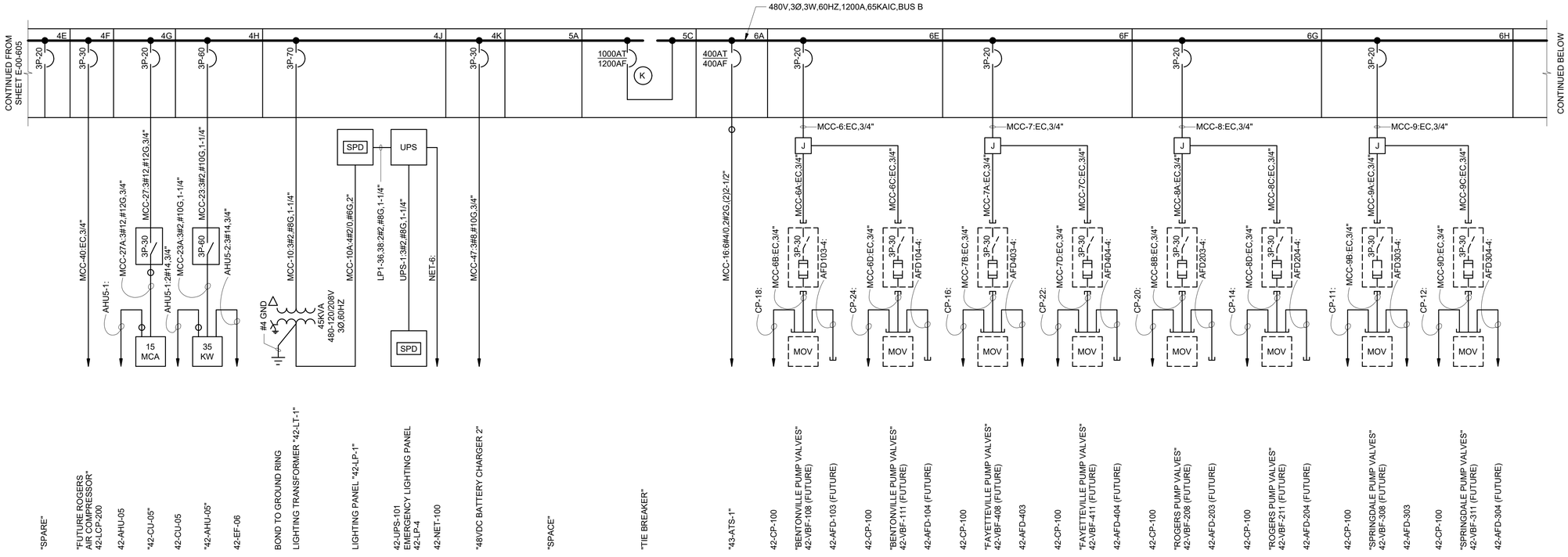

42-MCC-1 ONE-LINE DIAGRAM (CONTINUED)

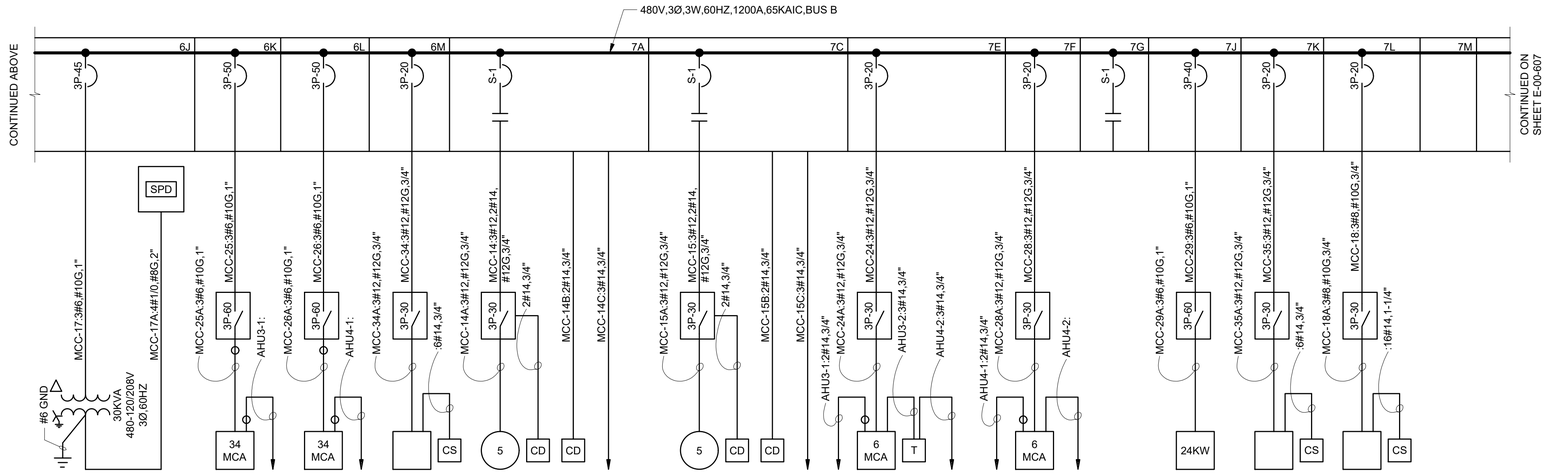

42-MCC-1 ONE-LINE DIAGRAM (CONTINUED)

1A	2A	3A	4A 4B	5A	6A	7A	8A 8B	9A	10A
1C		3C	4C 4D	5C		7C	8C 8D	9C 9D	10C
	2E	3E	4E		6E	7E	8E		
	2F	3F	4F		6F	7F	8F		
	2G	3G	4G		6G	7G	8G		
	2H	3H	4H		6H		8H	9H	
	2J	3J	4J		6J	7J		9J	
			4K		6K	7K			
			4L		6L	7L			
			4M		6M	7M			

42-MCC-1 FRONT ELEVATION

NO SCALE

NOTES:

1. SEE SHEETS E-00-001 AND E-00-002 FOR ELECTRICAL LEGENDS AND ABBREVIATIONS & NOTES.
2. SEE ARCHITECTURAL DRAWINGS FOR OVERHEAD BRIDGE CRANE LOCATION.
3. MCC NAMEPLATE WORDING IS SHOWN IN QUOTATION MARKS (" ") ON THE ONE-LINE DIAGRAM.
4. MAIN AND TIE CIRCUIT BREAKERS SHALL BE KEY INTERLOCKED SUCH THAT ALL THREE BREAKERS CANNOT BE CLOSED AT THE SAME TIME.
5. ALL EMPTY CONDUITS SHALL BE CAPPED AT LOCATION OF FUTURE EQUIPMENT AS SHOWN ON ONE-LINES AND PLAN DRAWINGS. ALL EMPTY CONDUITS SHALL BE EQUIPPED WITH PULLSTRINGS.
6. NOT USED.
7. SEE HVAC DRAWINGS FOR LOCATION OF THERMOSTATS.

(SCALE BAR IS 4" AT FULL SCALE) 0 1/2 1 2 3 4

PLOTTED: 1/20/2023 11:05:58 AM
FILE: C:\PW_WORKING\BVW_AMERICAS\D1129188\E-00-606.DWG
D11000
D11000

Black & Veatch Corporation
Kansas City, Missouri

THIS DOCUMENT WAS ORIGINALLY ISSUED AND SEALED ON JANUARY 24, 2023 BY KIRK H. IVY, A LICENSED PROFESSIONAL ENGINEER IN THE STATE OF ARKANSAS, E-16494

BEAVER WATER DISTRICT

WESTERN CORRIDOR PUMP STATION

100% SET

REVISIONS AND RECORD OF ISSUE

DESIGNED:	HNE
DETAILED:	RC
CHECKED:	WML
APPROVED:	KHI
DATE:	JANUARY 24, 2023
PROJECT NO.:	405654

PUMP STATION

ELECTRICAL

42-MCC-1
ONE-LINE DIAGRAM
(2 OF 2)

E-00-606

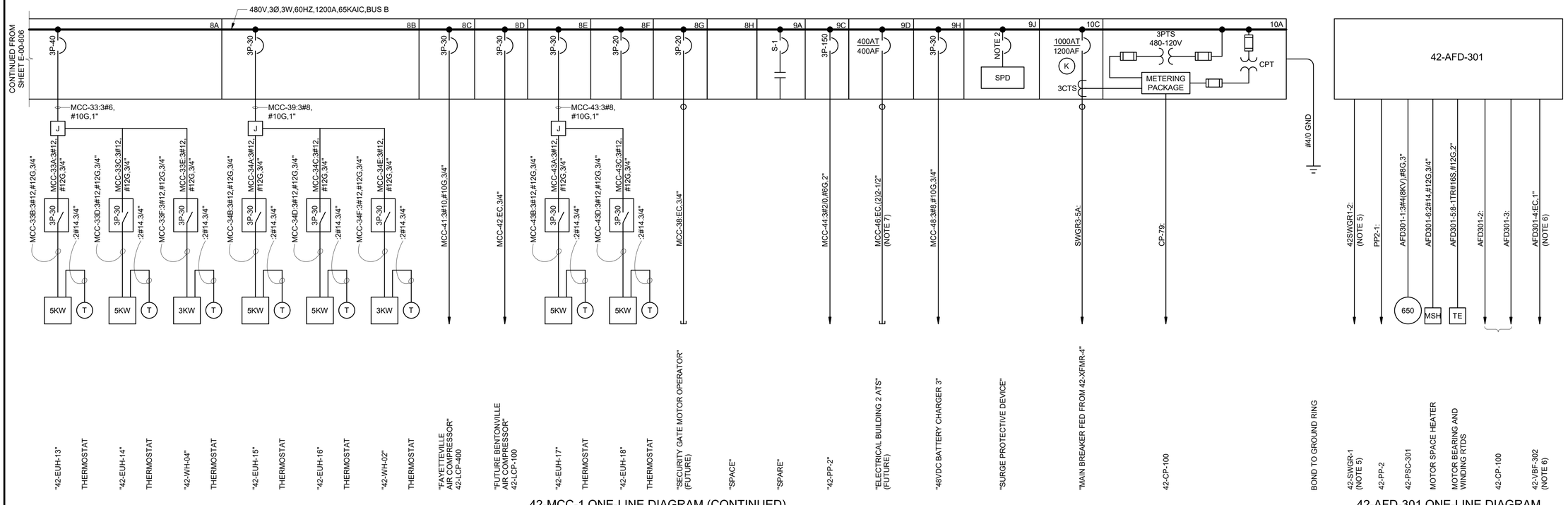

42-MCC-1 ONE-LINE DIAGRAM (CONTINUED)

42-AFD-301 ONE-LINE DIAGRAM

(TYPICAL FOR 42-AFD-302, 42-AFD-303)

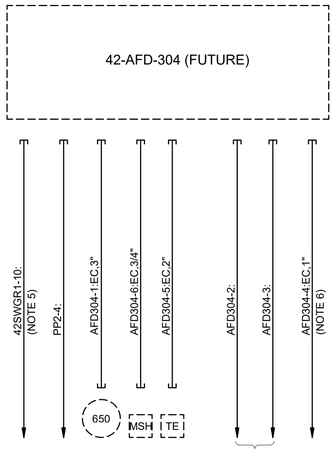

FUTURE 42-AFD-304 ONE-LINE DIAGRAM

(TYPICAL FOR 42-AFD-201, 42-AFD-202, 42-AFD-203, 42-AFD-204, 42-AFD-404, 42-AFD-101, 42-AFD-102, 42-AFD-103, 42-AFD-104)

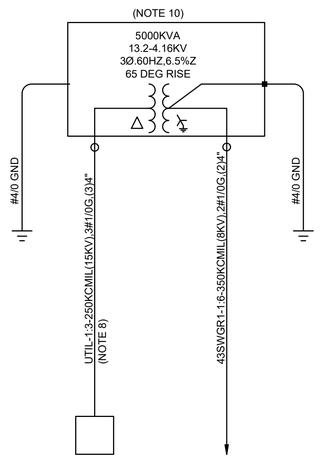

43-XFMR-1 ONE-LINE DIAGRAM

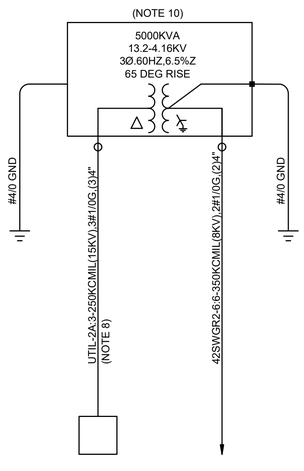

43-XFMR-2 ONE-LINE DIAGRAM

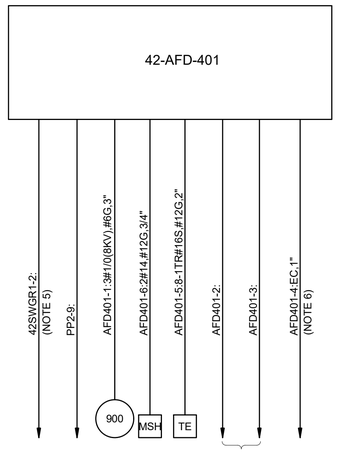

42-AFD-401 ONE-LINE DIAGRAM

(TYPICAL FOR 42-AFD-402, 42-AFD-403)

NOTES:

1. SEE SHEETS E-00-001 AND E-00-002 FOR ELECTRICAL LEGENDS AND ABBREVIATIONS & NOTES.
2. RATING OF CIRCUIT BREAKER SHALL BE PER THE RECOMMENDATION OF THE MANUFACTURER.
3. ALL EMPTY CONDUITS SHALL BE CAPPED AT LOCATION OF FUTURE EQUIPMENT AS SHOWN ON ONE-LINES AND PLAN DRAWINGS. ALL EMPTY CONDUITS SHALL BE EQUIPPED WITH PULLSTRINGS.
4. PAD-MOUNT SWITCH AND OVERHEAD DISTRIBUTION LINES TO BE FURNISHED AND INSTALLED BY CEC UTILITY. CONTRACTOR SHALL COORDINATE WITH UTILITY BEFORE ROUTING DUCT BANK.
5. SEE SHEETS E-00-603 AND E-00-604 FOR RESPECTIVE SWITCHGEAR CONNECTIONS AND CABLE TAGS TO EACH AFD.
6. SEE SHEETS E-00-605 AND E-00-606 FOR RESPECTIVE FUTURE VALVE CONNECTIONS AND CABLE TAGS TO EACH AFD.
7. CONDUIT SHALL BE CAPPED WITHIN MANHOLE LVEMH-1.
8. EACH PHASE CONDUCTOR SHALL BE ROUTED IN A DEDICATED CONDUIT WITH A GROUND CONDUCTOR IN EACH CONDUIT. SEE REQUIREMENTS FOR ISOLATED PHASE CONFIGURATION IN SPECIFICATION 16050 SECTION 3.6 D.
9. CONTRACTOR SHALL PROVIDE RISER CONDUIT AND WEATHERHEAD AS REQUIRED BY CEC UTILITY.
10. TRANSFORMER SHALL BE FURNISHED BY THE OWNER TO BE INSTALLED BY THE CONTRACTOR.

(SCALE BAR IS 4" AT FULL SCALE) 0 1/2 1 2 3 4

PLOTTED: 1/23/2023 8:08:32 AM
FILE: C:\PW_WORKING\BVW_AMERICAS\D1129188\E-00-607.DWG
PDT1000
PDT000

BLACK & VEATCH
Black & Veatch Corporation
Kansas City, Missouri

olsson

THIS DOCUMENT WAS ORIGINALLY ISSUED AND SEALED ON JANUARY 24, 2023 BY KIRK H. IVY, A LICENSED PROFESSIONAL ENGINEER IN THE STATE OF ARKANSAS, E-16494

BEAVER WATER DISTRICT

WESTERN CORRIDOR PUMP STATION

100% SET

REVISIONS AND RECORD OF ISSUE

DESIGNED:	HNE
DETAILED:	RC
CHECKED:	WML
APPROVED:	KHI
DATE:	JANUARY 24, 2023
PROJECT NO.:	405654

GENERAL

ELECTRICAL

MISCELLANEOUS ONE-LINE DIAGRAMS (1 OF 2)

E-00-607

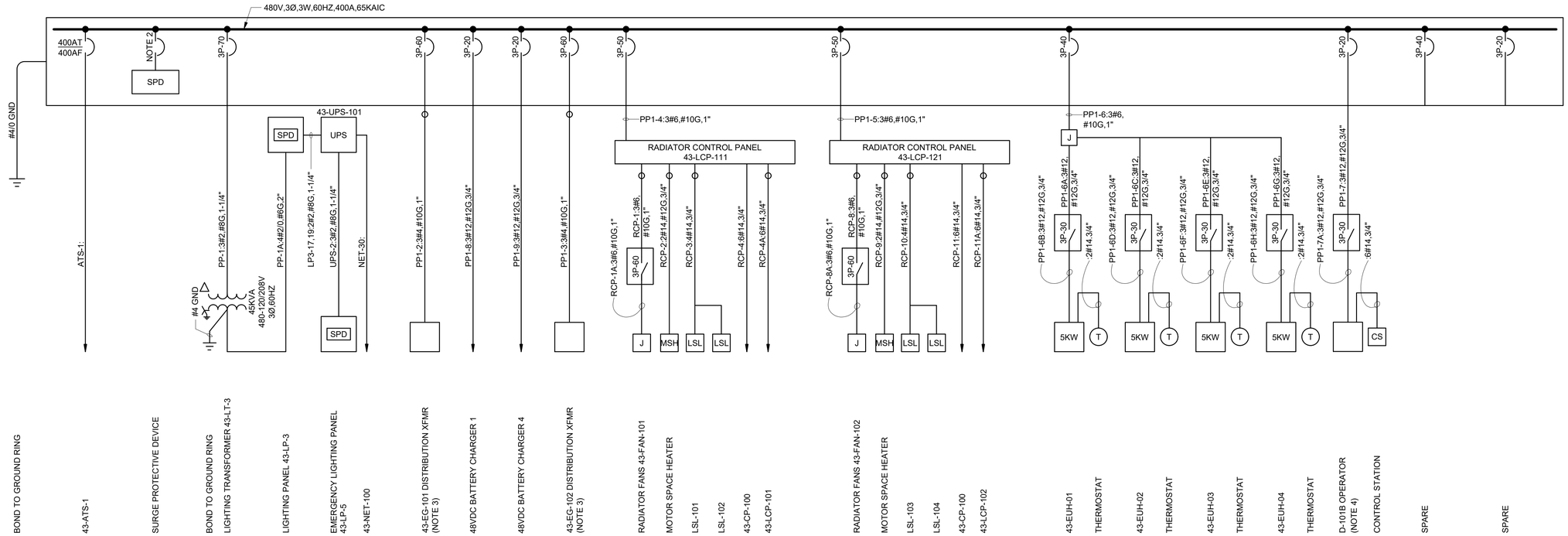

43-PP-1 ONE-LINE DIAGRAM

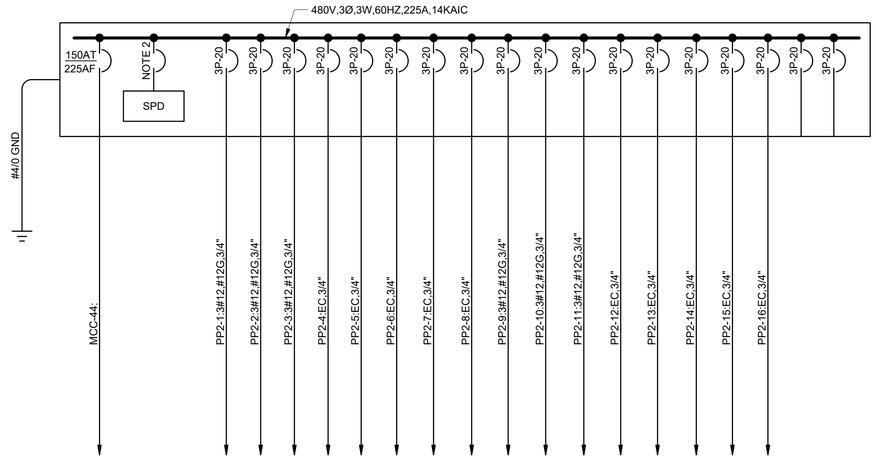

42-PP-2 ONE-LINE DIAGRAM

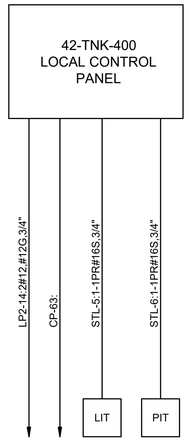

SURGE TANK
CONTROL PANEL
ONE-LINE DIAGRAM

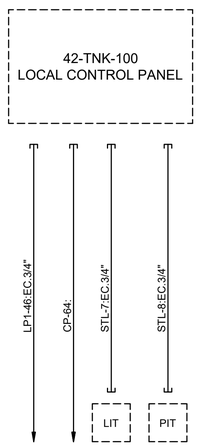

FUTURE SURGE TANK
CONTROL PANEL
ONE-LINE DIAGRAM

NOTES:

1. SEE SHEETS E-00-001 AND E-00-002 FOR ELECTRICAL LEGENDS AND ABBREVIATIONS & NOTES.
2. RATING OF CIRCUIT BREAKER SHALL BE PER THE RECOMMENDATION OF THE MANUFACTURER.
3. DISTRIBUTION XFMRS ARE FURNISHED BY THE ENGINE-GENERATOR SUPPLIER WITHIN THE GENERATOR ENCLOSURE.
4. REFER TO ARCHITECTURAL DOOR SCHEDULE FOR DOOR NUMBERS.
5. ALL EMPTY CONDUITS SHALL BE CAPPED AT LOCATION OF FUTURE EQUIPMENT AS SHOWN ON ONE-LINES AND PLAN DRAWINGS. ALL EMPTY CONDUITS SHALL BE EQUIPPED WITH PULLSTRINGS.

(SCALE BAR IS 4" AT FULL SCALE) 0 1/2 1 2 3 4

PLOTTED: 1/20/2023 11:10:18 AM
FILE: C:\PW_WORKING\BVW_AMERICAS\D1129188\E-00-608.DWG
ET1000
D1000

BLACK & VEATCH
Black & Veatch Corporation
Kansas City, Missouri

olsson

THIS DOCUMENT WAS ORIGINALLY ISSUED AND SEALED ON JANUARY 24, 2023 BY KIRK H. IVY, A LICENSED PROFESSIONAL ENGINEER IN THE STATE OF ARKANSAS, E-16494

BEAVER WATER DISTRICT

WESTERN CORRIDOR PUMP STATION

100% SET

REVISIONS AND RECORD OF ISSUE

DESIGNED:	HNE
DETAILED:	RC
CHECKED:	WML
APPROVED:	KHI
DATE:	JANUARY 24, 2023
PROJECT NO.:	405654

GENERAL

ELECTRICAL

MISCELLANEOUS ONE-LINE DIAGRAMS (2 OF 2)

E-00-608

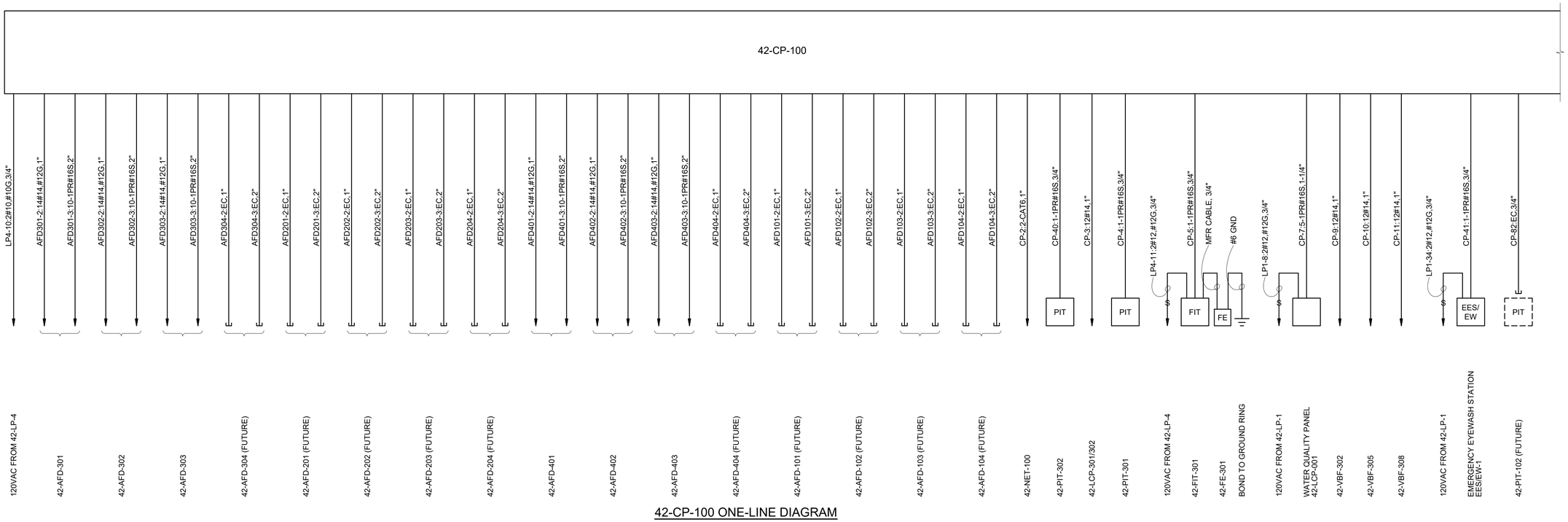

42-CP-100 ONE-LINE DIAGRAM

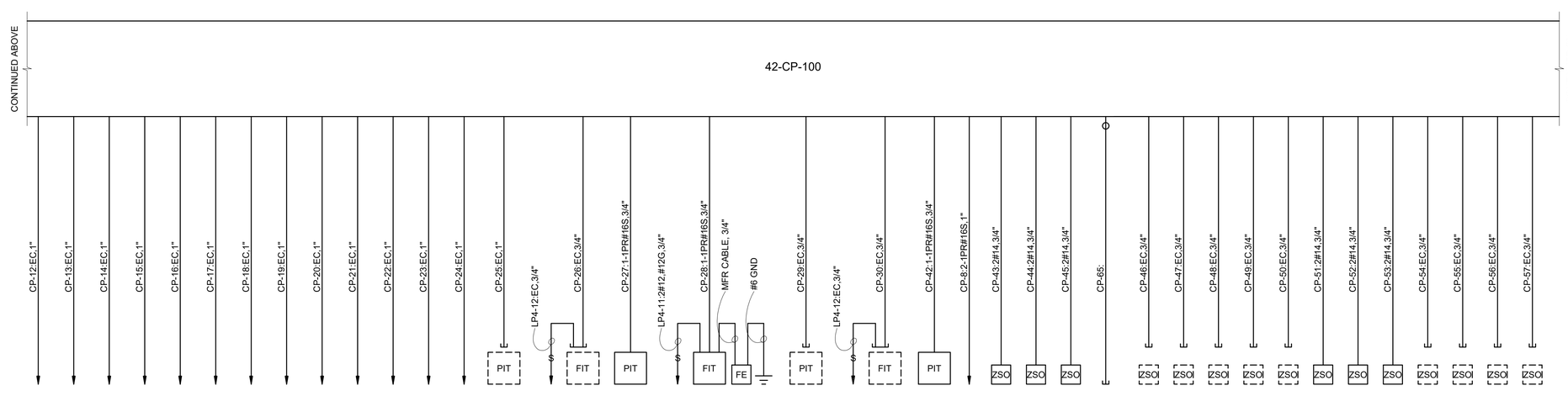

42-CP-100 ONE-LINE DIAGRAM (CONTINUED)

NOTES:
1. SEE SHEETS E-00-001 AND E-00-002 FOR ELECTRICAL LEGENDS AND ABBREVIATIONS & NOTES.
2. ALL EMPTY CONDUITS SHALL BE CAPPED AT LOCATION OF FUTURE EQUIPMENT AS SHOWN ON ONE-LINES AND PLAN DRAWINGS. ALL EMPTY CONDUITS SHALL BE EQUIPPED WITH PULL STRINGS.

(SCALE BAR IS 4" AT FULL SCALE) 0 1/2 1 2 3 4

PLOTTED: 1/20/2023 11:11:46 AM
FILE: C:\PW_WORKING\BVW_AMERICAS\D1129188\E-00-609.DWG
ET1000
ET1000

BLACK & VEATCH
Black & Veatch Corporation
Kansas City, Missouri

olsson

THIS DOCUMENT WAS ORIGINALLY ISSUED AND SEALED ON JANUARY 24, 2023 BY KIRK H. IVY, A LICENSED PROFESSIONAL ENGINEER IN THE STATE OF ARKANSAS, E-16494

BEAVER WATER DISTRICT

WESTERN CORRIDOR PUMP STATION

100% SET

REVISIONS AND RECORD OF ISSUE

DESIGNED:	HNE
DETAILED:	RC
CHECKED:	WML
APPROVED:	KHI
DATE:	JANUARY 24, 2023
PROJECT NO.:	405654

PUMP STATION

ELECTRICAL

CONTROL ONE-LINE DIAGRAMS (1 OF 4)

E-00-609

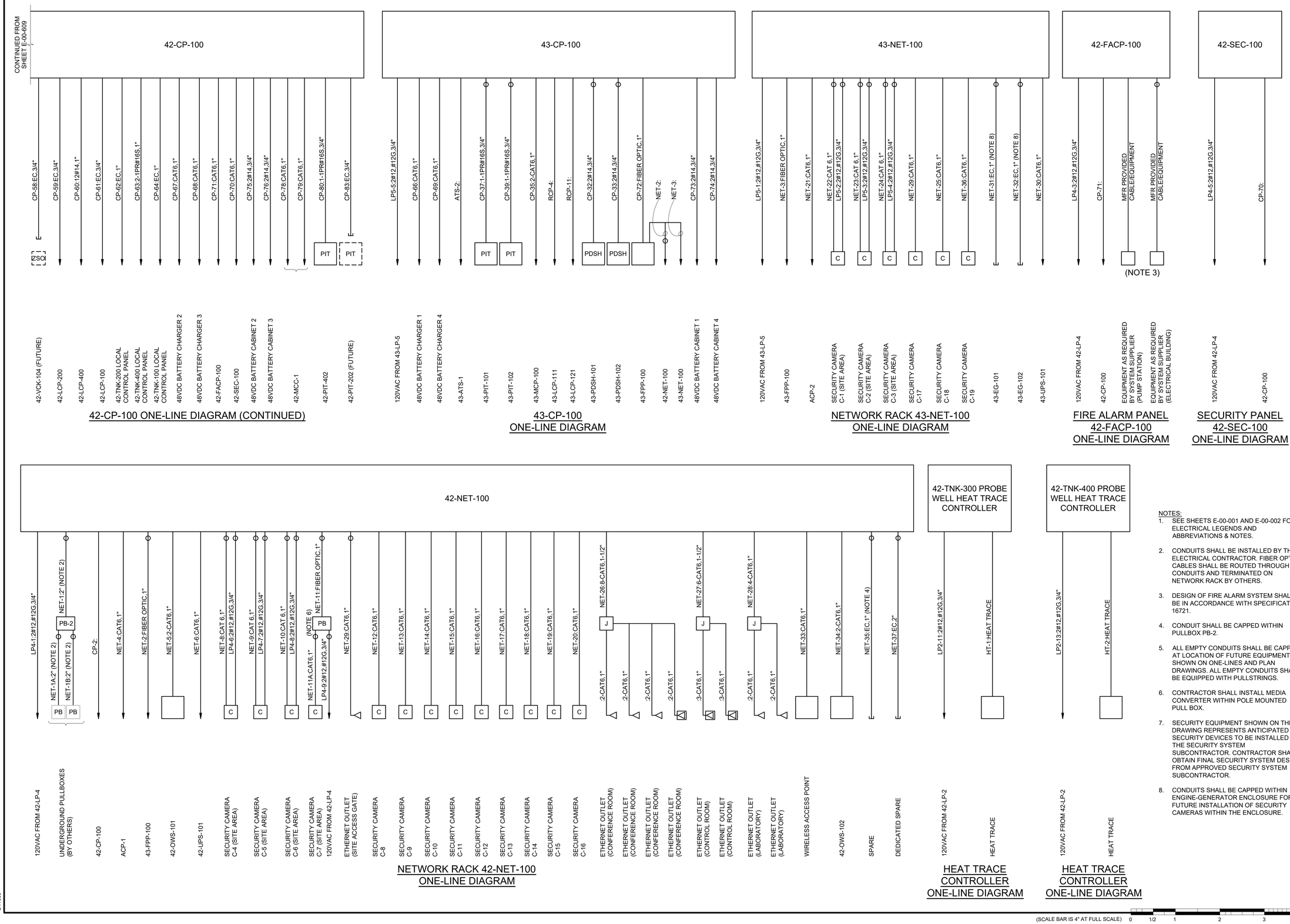

NOTES:

1. SEE SHEETS E-00-001 AND E-00-002 FOR ELECTRICAL LEGENDS AND ABBREVIATIONS & NOTES.
2. CONDUITS SHALL BE INSTALLED BY THE ELECTRICAL CONTRACTOR. FIBER OPTIC CABLES SHALL BE ROUTED THROUGH CONDUITS AND TERMINATED ON NETWORK RACK BY OTHERS.
3. DESIGN OF FIRE ALARM SYSTEM SHALL BE IN ACCORDANCE WITH SPECIFICATION 16721.
4. CONDUIT SHALL BE CAPPED WITHIN PULLBOX PB-2.
5. ALL EMPTY CONDUITS SHALL BE CAPPED AT LOCATION OF FUTURE EQUIPMENT AS SHOWN ON ONE-LINES AND PLAN DRAWINGS. ALL EMPTY CONDUITS SHALL BE EQUIPPED WITH PULLSTRINGS.
6. CONTRACTOR SHALL INSTALL MEDIA CONVERTER WITHIN POLE MOUNTED PULL BOX.
7. SECURITY EQUIPMENT SHOWN ON THIS DRAWING REPRESENTS ANTICIPATED SECURITY DEVICES TO BE INSTALLED BY THE SECURITY SYSTEM SUBCONTRACTOR. CONTRACTOR SHALL OBTAIN FINAL SECURITY SYSTEM DESIGN FROM APPROVED SECURITY SYSTEM SUBCONTRACTOR.
8. CONDUITS SHALL BE CAPPED WITHIN ENGINE-GENERATOR ENCLOSURE FOR FUTURE INSTALLATION OF SECURITY CAMERAS WITHIN THE ENCLOSURE.

BLACK & VEATCH
Black & Veatch Corporation
Kansas City, Missouri

olsson

THIS DOCUMENT WAS ORIGINALLY ISSUED AND SEALED ON JANUARY 24, 2023 BY KIRK H. IVY, A LICENSED PROFESSIONAL ENGINEER IN THE STATE OF ARKANSAS, E-16494

BEAVER WATER DISTRICT

WESTERN CORRIDOR PUMP STATION

100% SET

REVISIONS AND RECORD OF ISSUE

DESIGNED:	HNE
DETAILED:	RC
CHECKED:	WML
APPROVED:	KHI
DATE:	JANUARY 24, 2023
PROJECT NO.:	405654

GENERAL

ELECTRICAL

CONTROL ONE-LINE DIAGRAMS (2 OF 4)

E-00-610

114 OF 159

PLOTTED: 1/20/2023 11:13:16 AM
FILE: C:\PW_WORKING\BVW_AMERICAS\D1129186E-00-610.DWG
FD110000
FD110000
FD110000

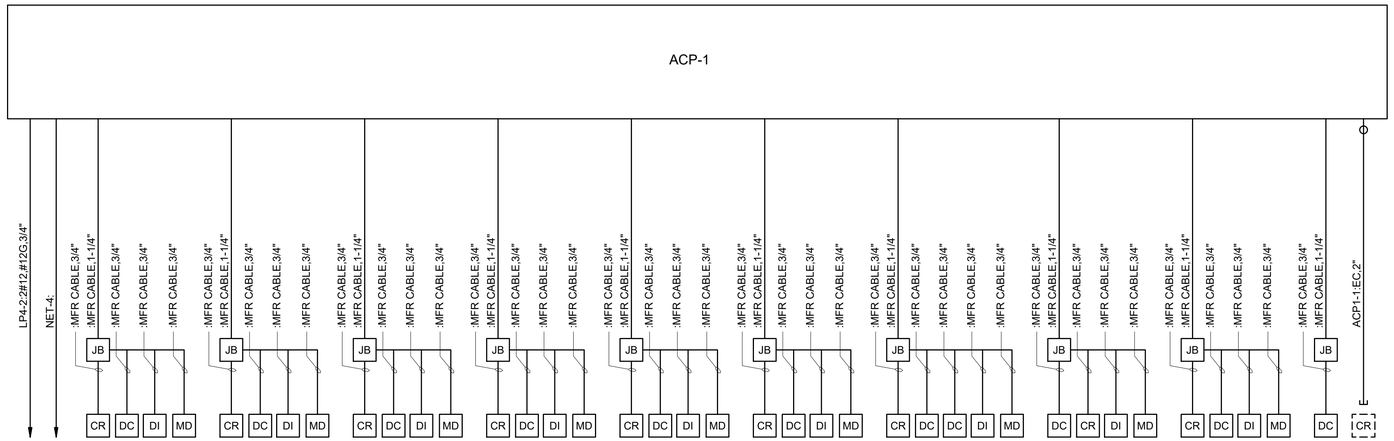

120VAC FROM 42-LP-4
42-NET-100
CARD READER D-111C
DOOR CONTACT D-111C
DOOR STRIKE D-111C
MOTION DETECTOR D-111C
CARD READER D-111A
DOOR CONTACT D-111A
DOOR STRIKE D-111A
MOTION DETECTOR D-111A
CARD READER D-114B
DOOR CONTACT D-114B
DOOR STRIKE D-114B
MOTION DETECTOR D-114B
CARD READER D-113B
DOOR CONTACT D-113B
DOOR STRIKE D-113B
MOTION DETECTOR D-113B
CARD READER D-111G
DOOR CONTACT D-111G
DOOR STRIKE D-111G
MOTION DETECTOR D-111G
CARD READER D-112
DOOR CONTACT D-112
DOOR STRIKE D-112
MOTION DETECTOR D-112
CARD READER D-101A
DOOR CONTACT D-101A
DOOR CONTACT D-101A
DOOR STRIKE D-101A
MOTION DETECTOR D-101A
DOOR CONTACT D-110A
CARD READER D-110A
DOOR STRIKE D-110A
MOTION DETECTOR D-110A
CARD READER D-111E
DOOR CONTACT D-111E
DOOR STRIKE D-111E
MOTION DETECTOR D-111E
DOOR CONTACT D-107
FUTURE SECURITY GATE CARD READER

ACCESS CONTROL PANEL ACP-1 ONE-LINE DIAGRAM
(SEE NOTE 2)

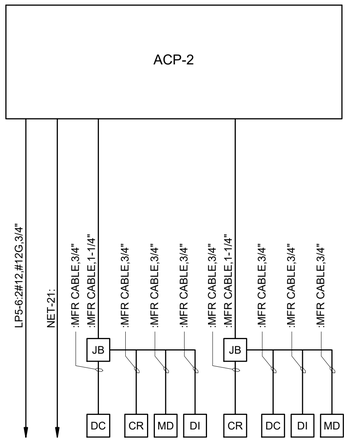

120VAC FROM 43-LP-5
43-NET-100
DOOR CONTACT D-101C
CARD READER D-101C
MOTION DETECTOR D-101C
DOOR STRIKE D-101C
CARD READER D-101A
DOOR CONTACT D-101A
DOOR STRIKE D-101A
MOTION DETECTOR D-101A

ACCESS CONTROL PANEL ACP-2 ONE-LINE DIAGRAM
(SEE NOTE 2)

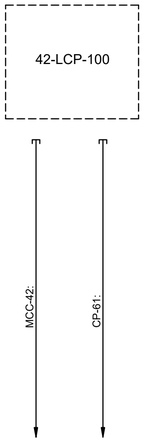

42-MCC-1
42-CP-100

FUTURE COMPRESSOR PACKAGE 42-LCP-100 ONE-LINE DIAGRAM

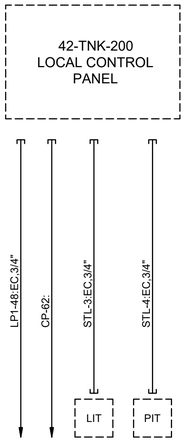

120VAC FROM 42-LP-1
42-CP-100
42-LIT-200
42-PIT-200

FUTURE SURGE TANK CONTROL PANEL ONE-LINE DIAGRAM

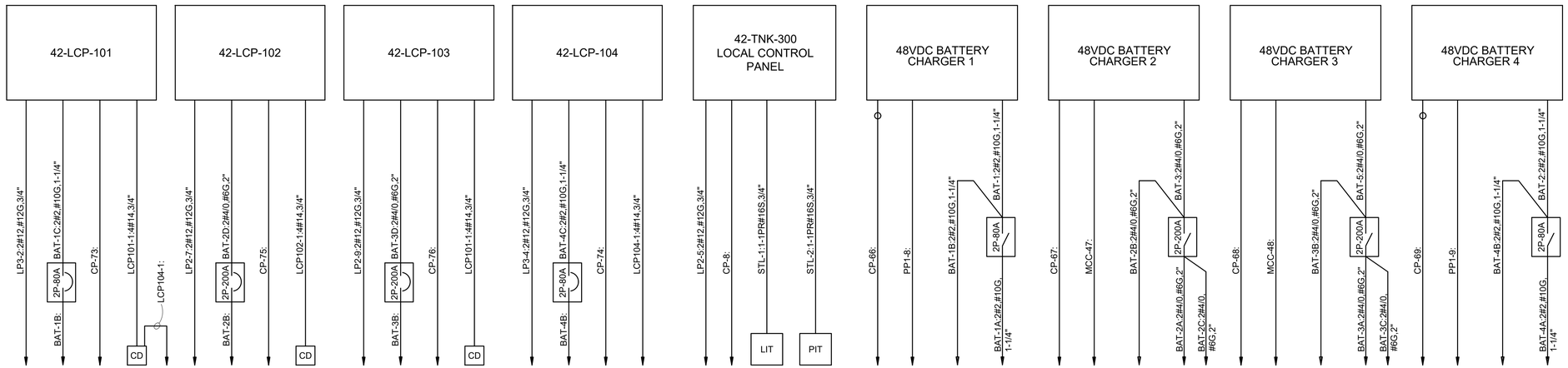

120VAC FROM 43-LP-3
48VDC BATTERY CHARGER 1 DISCONNECT
43-CP-100
43-CD-01
43-LCP-104
120VAC FROM 42-LP-2
48VDC BATTERY CHARGER 2 DISCONNECT
42-CP-100
42-CD-11
120VAC FROM 42-LP-2
48VDC BATTERY CHARGER 3 DISCONNECT
42-CP-100
42-CD-12
120VAC FROM 43-LP-3
48VDC BATTERY CHARGER 4 DISCONNECT
43-CP-100
43-CD-01
120VAC FROM 42-LP-2
42-CP-100
42-LIT-300
42-PIT-300
43-CP-100
43-PP-1
43-LCP-101 BREAKER
43-MTS-1
42-CP-100
42-MCC-1
42-LCP-102 BREAKER
42-MTS-2
42-MTS-3
42-CP-100
42-MCC-1
42-LCP-102 BREAKER
42-MTS-3
42-MTS-2
43-CP-100
43-PP-1
42-LCP-102 BREAKER
43-MTS-1

48VDC BATTERY CABINET 1 43-LCP-101 ONE-LINE DIAGRAM
48VDC BATTERY CABINET 2 42-LCP-102 ONE-LINE DIAGRAM
48VDC BATTERY CABINET 3 42-LCP-103 ONE-LINE DIAGRAM
48VDC BATTERY CABINET 4 43-LCP-104 ONE-LINE DIAGRAM
SURGE TANK CONTROL PANEL ONE-LINE DIAGRAM
48VDC BATTERY CHARGER 1 ONE-LINE DIAGRAM
48VDC BATTERY CHARGER 2 ONE-LINE DIAGRAM
48VDC BATTERY CHARGER 3 ONE-LINE DIAGRAM
48VDC BATTERY CHARGER 4 ONE-LINE DIAGRAM

NOTES:

1. SEE SHEETS E-00-001 AND E-00-002 FOR ELECTRICAL LEGENDS AND ABBREVIATIONS & NOTES.
2. ACCESS CONTROL SYSTEM PARTIAL ONE LINE DIAGRAMS SHOW GENERAL FUNCTIONAL ARRANGEMENT AND CONDUIT REQUIREMENTS FOR SYSTEM COMPONENTS. ADDITIONAL CONDUIT SHALL BE PROVIDED AND INSTALLED FOR COMPONENTS AND CONNECTIONS AS REQUIRED BY THE SYSTEM DESIGN. ALL CABLE REQUIRED FOR THE SECURITY SYSTEM EXCEPT 120VAC POWER AND FIBER OPTIC/ETHERNET NETWORK WIRING SHALL BE FURNISHED AND INSTALLED BY THE SECURITY SYSTEMS SUPPLIER IN CONDUITS INSTALLED BY THE CONTRACTOR AS INDICATED. ALL SECURITY SYSTEM CONDUITS SHALL BE EQUIPPED WITH PULL STRINGS.
3. ALL EMPTY CONDUITS SHALL BE CAPPED AT LOCATION OF FUTURE EQUIPMENT AS SHOWN ON ONE-LINES AND PLAN DRAWINGS. ALL EMPTY CONDUITS SHALL BE EQUIPPED WITH PULL STRINGS.

(SCALE BAR IS 4" AT FULL SCALE) 0 1/2 1 2 3 4

PLOTTED: 1/20/2023 11:18:34 AM
FILE: C:\PW_WORKING\BVW_AMERICAS\D1129186E-00-611.DWG
FD11000
FD10000

BLACK & VEATCH
Black & Veatch Corporation
Kansas City, Missouri

olsson

THIS DOCUMENT WAS ORIGINALLY ISSUED AND SEALED ON JANUARY 24, 2023 BY KIRK H. IVY, A LICENSED PROFESSIONAL ENGINEER IN THE STATE OF ARKANSAS, E-16494

BEAVER WATER DISTRICT

WESTERN CORRIDOR PUMP STATION

100% SET

REVISIONS AND RECORD OF ISSUE

DESIGNED:	HNE
DETAILED:	RC
CHECKED:	WML
APPROVED:	KHI
DATE:	JANUARY 24, 2023
PROJECT NO.:	405654

GENERAL

ELECTRICAL

CONTROL ONE-LINE DIAGRAMS (3 OF 4)

E-00-611

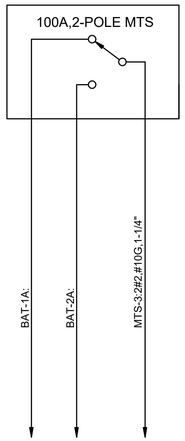

43-MTS-1 ONE-LINE DIAGRAM

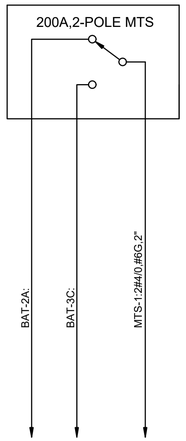

42-MTS-2 ONE-LINE DIAGRAM

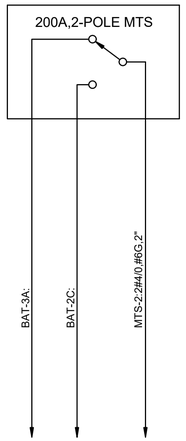

42-MTS-3 ONE-LINE DIAGRAM

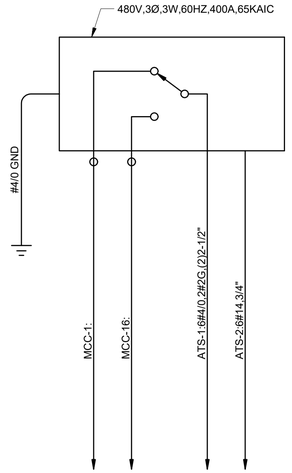

43-ATS-1 ONE-LINE DIAGRAM

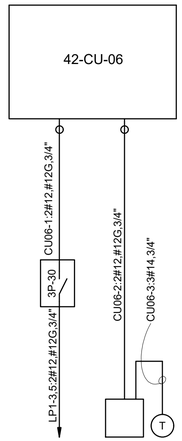

42-CU-06 ONE-LINE DIAGRAM
(TYPICAL FOR 42-CU-07)

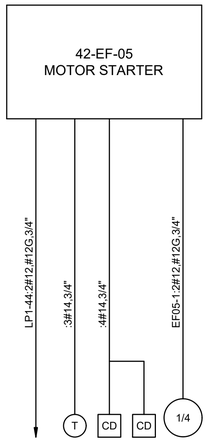

42-EF-05 ONE-LINE DIAGRAM
(TYPICAL FOR 42-EF-07)

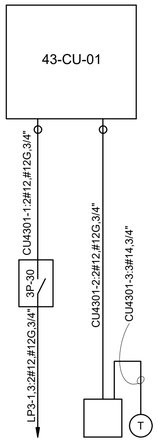

43-CU-01 ONE-LINE DIAGRAM
(TYPICAL FOR 43-CU-02)

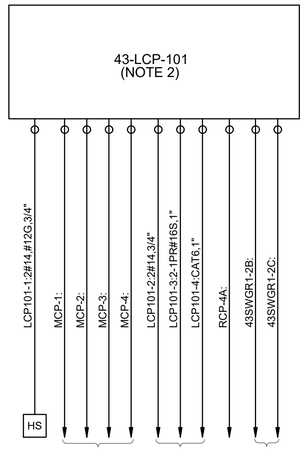

ENGINE-GENERATOR LOCAL CONTROL PANEL 43-LCP-101 ONE-LINE DIAGRAM

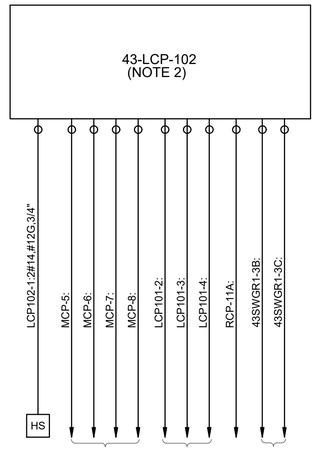

ENGINE-GENERATOR LOCAL CONTROL PANEL 43-LCP-102 ONE-LINE DIAGRAM

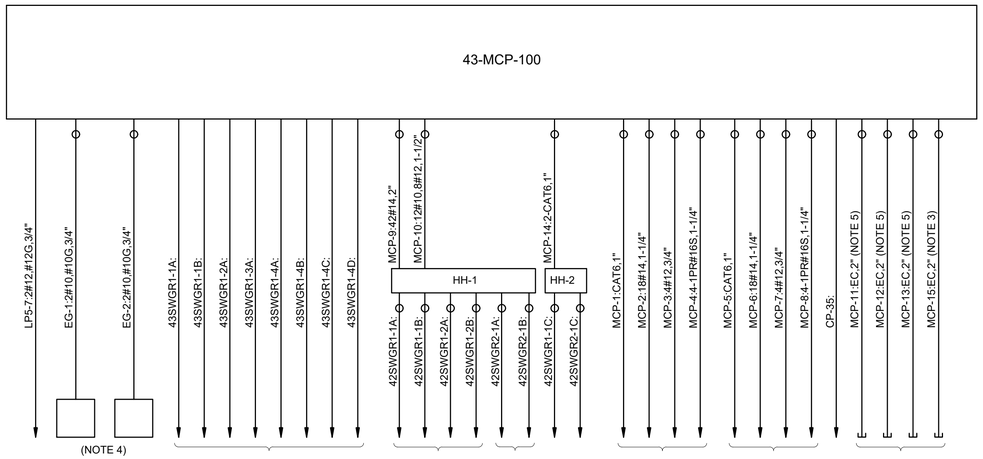

ENGINE-GENERATOR MASTER CONTROL PANEL 43-MCP-100 ONE-LINE DIAGRAM

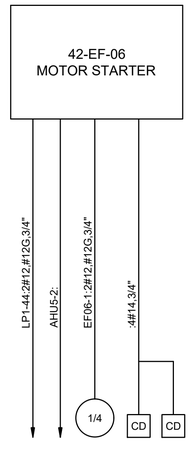

42-EF-06 ONE-LINE DIAGRAM

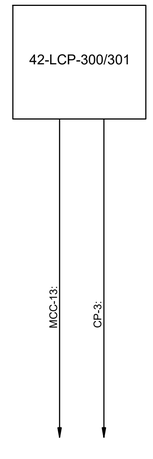

COMPRESSOR PACKAGE 42-LCP-300/301 ONE-LINE DIAGRAM

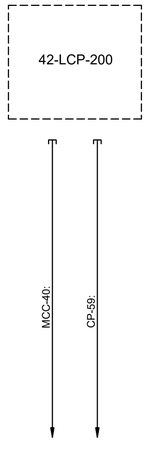

FUTURE COMPRESSOR PACKAGE 42-LCP-200 ONE-LINE DIAGRAM

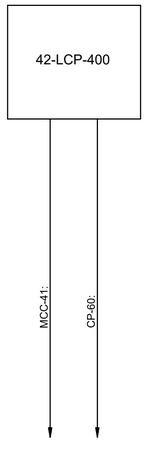

COMPRESSOR PACKAGE 42-LCP-400 ONE-LINE DIAGRAM

NOTES:
1. SEE SHEETS E-00-001 AND E-00-002 FOR ELECTRICAL LEGENDS AND ABBREVIATIONS & NOTES.
2. LOCAL CONTROL PANELS ARE FURNISHED BY THE ENGINE-GENERATOR SUPPLIER WITHIN THE GENERATOR ENCLOSURE.
3. CONDUITS SHALL BE CAPPED WITHIN MANHOLE SEMH-1.
4. STARTING BATTERIES ARE FURNISHED BY THE ENGINE-GENERATOR SUPPLIER WITHIN THE GENERATOR ENCLOSURE.
5. CONDUITS SHALL BE CAPPED WITHIN MANHOLE LVEMH-1.

(SCALE BAR IS 4" AT FULL SCALE) 0 1/2 1 2 3 4

PLOTTED: 1/20/2023 11:19:25 AM
FILE: C:\PW_WORKING\BVW_AMERICAS\D1129188\E-00-612.DWG
D11000
D1100

BLACK & VEATCH
Black & Veatch Corporation
Kansas City, Missouri

olsson

THIS DOCUMENT WAS ORIGINALLY ISSUED AND SEALED ON JANUARY 24, 2023 BY KIRK H. IVY, A LICENSED PROFESSIONAL ENGINEER IN THE STATE OF ARKANSAS, E-16494

BEAVER WATER DISTRICT

WESTERN CORRIDOR PUMP STATION

100% SET

REVISIONS AND RECORD OF ISSUE

DESIGNED:	HNE
DETAILED:	RC
CHECKED:	WML
APPROVED:	KHI
DATE:	JANUARY 24, 2023
PROJECT NO.:	405654

GENERAL

ELECTRICAL

CONTROL ONE-LINE DIAGRAMS (4 OF 4)

E-00-612

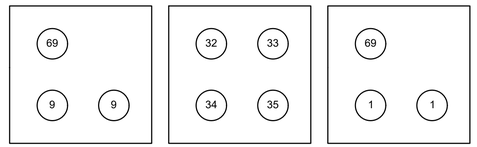

SECTION 1
NO SCALE E-01-102, E-43-103

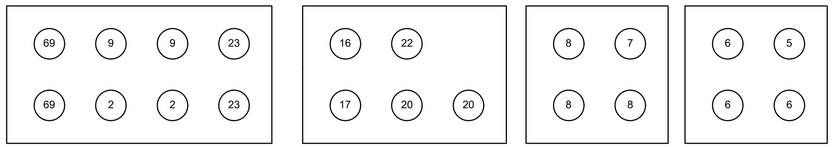

SECTION 2
NO SCALE E-01-102, E-42-112

SECTION 3
NO SCALE E-01-102, E-42-111

SECTION 4
NO SCALE E-42-110

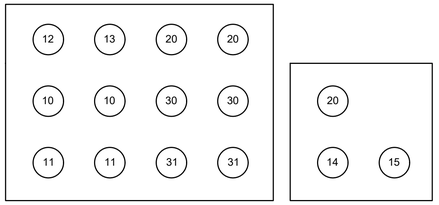

SECTION 5
NO SCALE E-01-102

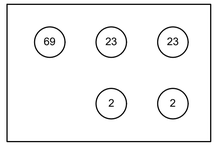

SECTION 6
NO SCALE E-43-103

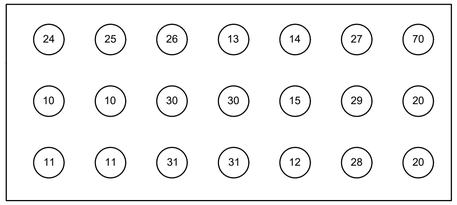

SECTION 7
NO SCALE E-43-103

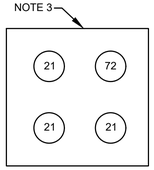

SECTION 8
NO SCALE E-01-101, E-01-102

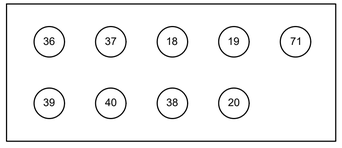

SECTION 9
NO SCALE E-01-102

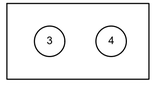

SECTION 10
NO SCALE E-43-103

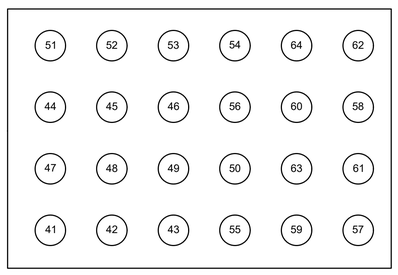

SECTION 11
NO SCALE E-43-103

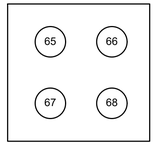

SECTION 12
NO SCALE E-43-103

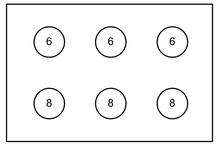

SECTION 13
NO SCALE E-42-110

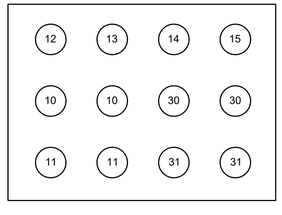

SECTION 14
NO SCALE E-42-110

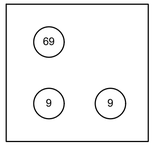

SECTION 15
NO SCALE E-01-102

DUCT BANK SCHEDULE			
COND. NO.	SIZE	CIRCUIT NUMBER	REMARKS
1	(2)4	43SWGR1-1	MV POWER
2	(2)4	43SWGR1-4	MV POWER
3	4	43SWGR1-2	MV POWER
4	4	43SWGR1-3	MV POWER
5	4	42SWGR1-6	MV POWER
6	(3)4	42SWGR1-6A	LV POWER
7	4	42SWGR2-5	MV POWER
8	(3)4	42SWGR2-5A	LV POWER
9	(2)4	42SWGR2-6	MV POWER
10	(2)2-1/2"	MCC-1	LV POWER
11	(2)2-1/2"	MCC-16	LV POWER
12	2	MCP-9	SWGR CONTROL
13	2	MCP-10	SWGR CONTROL
14	2	MCP-14	SWGR COMM
15	2	NET-2	FIBER
16	2	NET-10	ETHERNET
17	2	NET-1	FIBER
18	2	MCC-38	SPARE FOR FUTURE LV POWER
19	2	NET-37	SPARE FOR FUTURE ISP
20	2	-	NON-DEDICATED SPARE
21	(3)4	UTIL-1	MV POWER
22	2	LP4-8	LV POWER
23	(2)4	43SWGR1-5	SPARE FOR FUTURE MV POWER
24	2	MCP-11	SPARE FOR FUTURE SWGR CONTROL
25	2	MCP-12	SPARE FOR FUTURE SWGR CONTROL
26	2	MCP-13	SPARE FOR FUTURE SWGR CONTROL
27	2	MCP-15	SPARE FOR FUTURE SWGR COMM
28	2	NET-24	ETHERNET
29	2	LP5-4	LV POWER
30	(2)2-1/2"	MCC-45	SPARE FOR FUTURE LV POWER
31	(2)2-1/2"	MCC-46	SPARE FOR FUTURE LV POWER
32	2	NET-22	ETHERNET
33	2	LP5-2	LV POWER
34	2	NET-23	ETHERNET
35	2	LP5-3	LV POWER
36	2	CP-65	SPARE FOR FUTURE CONTROL
37	2	LP1-45	LV POWER
38	2	NET-11	FIBER
39	2	LP4-9	LV POWER
40	2	NET-29	ETHERNET
41	2	43SWGR1-2B	SWGR CTS/PTS
42	2	43SWGR1-2C	SWGR COMM
43	2	43SWGR1-2D,43SWGR1-2E	GEN CTS
44	2	43SWGR1-3B	SWGR CTS/PTS
45	2	43SWGR1-3C	SWGR COMM
46	2	43SWGR1-3D,43SWGR1-3E	GEN CTS
47	2	MCP-1	GEN CONTROL/COMM
48	2	MCP-2	GEN CONTROL/COMM
49	2	MCP-3	GEN CONTROL/COMM
50	2	MCP-4	GEN CONTROL/COMM
51	2	MCP-5	GEN CONTROL/COMM
52	2	MCP-6	GEN CONTROL/COMM
53	2	MCP-7	GEN CONTROL/COMM
54	2	MCP-8	GEN CONTROL/COMM
55	2	RCP-4A	RADIATOR CONTROL
56	2	RCP-11A	RADIATOR CONTROL
57	2	NET-31	SPARE FOR FUTURE CAMERA
58	2	NET-32	SPARE FOR FUTURE CAMERA
59	2	PP1-2	LV POWER
60	2	PP1-3	LV POWER
61	2	EG-1	DC POWER
62	2	EG-2	DC POWER
63	2	CP-32	CONTROL
64	2	CP-33	CONTROL
65	2	RCP-1	RADIATOR LV POWER
66	2	RCP-2,RCP-3	RADIATOR CONTROL
67	2	RCP-8	RADIATOR LV POWER
68	2	RCP-9,RCP-10	RADIATOR CONTROL
69	4	-	NON-DEDICATED SPARE
70	2	-	FIRE ALARM SIGNALS
71	2	ACP1-1	SPARE FOR FUTURE SECURITY
72	4	-	SPARE FOR ISOLATED PHASE

DUCT BANK SCHEDULE
NO SCALE

NOTES:
1. SEE SHEETS E-00-001 AND E-00-002 FOR ELECTRICAL LEGENDS AND ABBREVIATIONS & NOTES.
2. UNLESS OTHERWISE NOTED, ALL NON-DEDICATED SPARE CONDUITS SHALL TURN UP RIGHT OUTSIDE WALL OF BUILDING, CLEAR OF ANY EGRESS POINTS AND BE CAPPED.
3. CONDUITS WITHIN THIS DUCT BANK SHALL BE ARRANGED IN CLOSE PROXIMITY OF EACH OTHER, SEE ISOLATED PHASE REQUIREMENTS IN SPECIFICATION 16050 SECTION 3.6 D. SPARE CONDUIT SHALL STUB UP AND BE CAPPED WITHIN CEC PAD MOUNT SWITCH AND 43-XFMR-1.

BLACK & VEATCH
Black & Veatch Corporation
Kansas City, Missouri

olsson

THIS DOCUMENT WAS ORIGINALLY ISSUED AND SEALED ON JANUARY 24, 2023 BY KIRK H. IVY, A LICENSED PROFESSIONAL ENGINEER IN THE STATE OF ARKANSAS, E-16494

BEAVER WATER DISTRICT

WESTERN CORRIDOR PUMP STATION

100% SET

REVISIONS AND RECORD OF ISSUE

DESIGNED:	HNE
DETAILED:	RC
CHECKED:	WML
APPROVED:	KHI
DATE:	JANUARY 24, 2023
PROJECT NO.:	405654

GENERAL

ELECTRICAL

DUCTBANK SECTIONS

E-00-613

(SCALE BAR IS 4" AT FULL SCALE) 0 1/2 1 2 3 4

PLOTTED: 1/20/2023 11:20:59 AM
FILE: C:\PW_WORKING\BVW_AMERICAS\D1129188E-00-613.DWG
PSTYLE: 11000
PSTYLE: 01000

LIGHTING FIXTURE SCHEDULE

FIXTURE	LAMP	MTG HGT	DESCRIPTION	MANUFACTURER
1	LED 33W 3,887 LUMENS	AS NOTED ON PLANS	PENDANT MOUNT LED FIXTURE, FROSTED POLYCARBONATE LENS, MEDIUM DISTRIBUTION, 0-10V DIMMING, 40K, 80CRI, 120V	HOLOPHANE EVT4 4000LM FST MD 120 GZ10 40K 80CRI
1E	LED 33W 3,887 LUMENS	AS NOTED ON PLANS	SAME AS FIXTURE NO. 1, WITH EMERGENCY BATTERY BACKUP	HOLOPHANE EVT4 4000LM FST MD 120 GZ10 40K 80CRI E15WCP
2	LED 29W 3,340 LUMENS	AS NOTED ON PLANS	RECESSED MOUNT LED, FLUSH ALUMINUM DOOR, ACRYLIC LENS, 0-10V DIMMING DRIVER, 40K, 80CRI, 120V	LITHONIA 2TL2 33L FW A12 EZ1 LP840
2E	LED 29W 3,340 LUMENS	AS NOTED ON PLANS	SAME AS FIXTURE NO. 2, WITH EMERGENCY BATTERY BACKUP	LITHONIA 2TL2 33L FW A12 EZ1 LP840 EL14L
3	LED 50W 6,689 LUMENS	AS NOTED ON PLANS	WALL MOUNTED LED FIXTURE, P3 PERFORMANCE PACKAGE, WIDE DISTRIBUTION, PHOTOELECTRIC CELL, BLACK FINISH, 40KM 120V	HOLOPHANE WST LED P3 40K VW 120 PE DBLXD
3E	LED 50W 6,689 LUMENS	AS NOTED ON PLANS	SAME AS FIXTURE NO. 3, WITH EMERGENCY BATTERY BACKUP	HOLOPHANE WST LED P3 40K VW 120 PE E20WH DBLXD
4	LED 189W 27,233 LUMENS	AS NOTED ON PLANS	YOKE MOUNTED LED FLOODLIGHT, P4 PERFORMACE PACKAGE, WIDE FLOOD DISTRIBUTION, YOKE MOUNT WITH 2' 16-3 SO CORD, BLACK FINISH,40K, 70CRI, 120V	LITHONIA DSXF3 LED 6 P4 40K 70CRI WFL 120 YKC62 DBLXD
5	LED 66.6W 8,181 LUMENS	AS NOTED ON PLANS	SURFACE MOUNT LED FIXTURE, 48" LENGTH, FLAT POLYCARBONATE FROSTED DIFFUSER, WIDE DISTRIBUTION, 0-10V DIMMING DRIVER, RIGID MOUN BRACKET, 40K, 80CRI, 120V	HOLOPHANE EMX L48 10000LM FPFL WD 120 GZ10 40K 80CRI RMBA DGXD
5E	LED 66.6W 8,181 LUMENS	AS NOTED ON PLANS	SAME AS FIXTURE NO. 5, WITH EMERGENCY BATTERY BACKUP	HOLOPHANE EMX L48 10000LM FPFL WD 120 GZ10 40K 80CRI E10WLCP RMBA DGXD
6	LED 241W 27,664 LUMENS	AS NOTED ON PLANS	POLE MOUNT LED FIXTURE, P9 OPTICS PACKAGE, T2M DISTRIBUTION, ROUND POLE MOUNTING, PHOTOCELL CONTROL, BLACK FINISH, 40K, 120V ROUND STRAIGHT STEEL POLE, 15' HEIGHT, 4 1/2" WALL THICKNESS, DSX DRILL MOUNTING, BLACK FINISH	LITHONIA DSX1 P9 40K T2M MVOLT RPA PER DBLXD DLL127 1.5 JU POLE: LITHONIA RSS 15 4-5B DM19AS DBLXD
EXIT	LED .62W	AS NOTED ON PLANS	WALL MOUNT LED EXIT SIGN, SINGLE STENCIL FACE TYPE, WHITE HOUSING, RED LETTER, NICKEL CADIMIUM BATTERY, SELF-DIAGNOSTIC, 120V	LITHONIA LQM S W 3 R MVOLT EL N SD

LIGHTING FIXTURE SCHEDULE

NOTES:
1. SEE SHEETS E-00-001 AND E-00-002 FOR ELECTRICAL LEGENDS AND ABBREVIATIONS & NOTES.

(SCALE BAR IS 4" AT FULL SCALE) 0 1/2 1 2 3 4

PLOTTED: 1/23/2023 8:10:13 AM
FILE: C:\PW_WORKING\BVW_AMERICAS\D1129188\E-00-614.DWG
PSTYLE: PSTYLE
PLOT: D1100

BLACK & VEATCH
Black & Veatch Corporation
Kansas City, Missouri

olsson

THIS DOCUMENT WAS ORIGINALLY ISSUED AND SEALED ON JANUARY 24, 2023 BY KIRK H. IVY, A LICENSED PROFESSIONAL ENGINEER IN THE STATE OF ARKANSAS, E-16494

BEAVER WATER DISTRICT

WESTERN CORRIDOR PUMP STATION

100% SET

REVISIONS AND RECORD OF ISSUE

DESIGNED:	HNE
DETAILED:	RC
CHECKED:	WML
APPROVED:	KHI
DATE: JANUARY 24, 2023	
PROJECT NO.:	405654

GENERAL

ELECTRICAL

LIGHTING SCHEDULE

E-00-614

PANELBOARD: 42-LP-1 | BUS: COPPER | MAINS: 3P-150A MAIN BREAKER
SERVICE: 120/208V, 3PH, 4W, S/N | RATING: 225A | LOCATION: PUMP STATION LOW VOLTAGE ELECTRICAL ROOM
MOUNTING: SURFACE

PHASE "A" V.A.	PHASE "B" V.A.	PHASE "C" V.A.	LOAD	P	BKR	CKT #	CKT #	BKR	P	LOAD	PHASE "A" V.A.	PHASE "B" V.A.	PHASE "C" V.A.
			SPARE	1	20	1	2	20	1	RECP - LV ELEC RM 109	540		
	1976		42-CU-06	2	30	3	4	20	1	RECP - WORKSHOP 110		720	
		1976	-	-	-	5	6	20	1	RECP - MECHANICAL ROOM 108			540
99			LTG - LV ELEC RM 109	1	20	7	8	20	1	42-LCP-001	250		
	66		LTG - MECHANICAL ROOM 108	1	20	9	10	20	1	RECP - WOMENS RESTROOM 102		180	
		33	LTG - WOMENS RESTROOM 102	1	20	11	12	20	1	RECP - MENS RESTROOM 103			180
140			LTG - CONTROL ROOM 107	1	20	13	14	20	1	RECP - CONFERENCE ROOM 104	540		
	66		LTG - MENS RESTROOM 103	1	20	15	16	20	1	RECP - LABORATORY 105		720	
		165	LTG - WORKSHOP 110	1	20	17	18	20	1	RECP - STORAGE 106			360
280			LTG - HALL 101	1	20	19	20	20	1	RECP - JANITOR 107	180		
	66		LTG - CONFERENCE ROOM 104	1	20	21	22	20	1	LTG - JANITOR 107		35	
		105	LTG - STORAGE 106	1	20	23	24	20	1	LTG - PUMP ROOM 111 NORTH			1134
385			LTG - LABORATORY 105	1	20	25	26	20	1	LTG - EXTERIOR NORTH	840		
	1134		LTG - PUMP ROOM 111 NORTH	1	20	27	28	20	1	RECP - EXTERIOR NORTH		180	
		50	42-CP-01	1	20	29	30	30	2	42-CU-07			1976
650			42-EWC-1,42-TP-01	1	20	31	32	-	-	-	1976		
	858		LTG - PUMP ROOM 111 NORTH WALKWAY	1	20	33	34	20	1	EYEWASH STATION EES/EW-1		300	
		858	LTG - PUMP ROOM 111 NORTH WALKWAY	1	20	35	36	70	2	42-UPS-101			3000
3000			42-WH-03,42-WH-04,42-WH-07	2	40	37	38	-	-	-	3000		
	3000		-	-	-	39	40	20	1	WC-1,UR-1,42-TP-02,42-TP-03		200	
		360	RECP - PUMP ROOM 111 NORTH	1	20	41	42	20	1	RECP - PUMP ROOM 111 NORTH			720
			SPARE	1	20	43	44	20	1	42-EF-05,42-EF-06	1392		
	261		LTG-SECURITY GATE	1	20	45	46	20	1	42-TNK-100 LCP (FUTURE)			
		2000	42-WH-05,42-WH-06	2	30	47	48	20	1	42-TNK-200 LCP (FUTURE)			
2000			-	-	-	49	50	20	1	42-TNK-100 DRAIN TRAPS (FUTURE)			
			SPARE	1	20	51	52	20	1	42-TNK-200 DRAIN TRAPS (FUTURE)			
			SPARE	1	20	53	54	-	-	SPACE			
6554			TOTAL "A"		15272					TOTAL "A"	8718		
	7427		TOTAL "B"		9762					TOTAL "B"		2335	
		5547	TOTAL "C"		13457					TOTAL "C"			7910
			TOTAL =		38491								

PANELBOARD SCHEDULE 42-LP-1
NO SCALE

PANELBOARD: 42-LP-2 | BUS: COPPER | MAINS: 3P-100A MAIN BREAKER
SERVICE: 120/208V, 3PH, 4W, S/N | RATING: 225A | LOCATION: PUMP STATION MEDIUM VOLTAGE ELECTRICAL ROOM 1
MOUNTING: SURFACE

PHASE "A" V.A.	PHASE "B" V.A.	PHASE "C" V.A.	LOAD	P	BKR	CKT #	CKT #	BKR	P	LOAD	PHASE "A" V.A.	PHASE "B" V.A.	PHASE "C" V.A.
1323			LTG - PUMP ROOM 111 SOUTH	1	20	1	2	20	1	LTG - PUMP ROOM 111 SOUTH	1323		
	858		LTG - PUMP ROOM 111 SOUTH WALKWAY	1	20	3	4	20	1	LTG - PUMP ROOM 111 SOUTH WALKWAY		936	
		200	42-TNK-300 LCP	1	20	5	6	20	1	42-TNK-300 DRAIN TRAPS			400
500			42-LCP-102	1	20	7	8	20	1	42-TNK-400 DRAIN TRAPS	400		
	500		42-LCP-103	1	20	9	10	20	1	42-EF-07		456	
		100	42-TNK-300 HEAT TRACE,42-TP-04	1	20	11	12	20	1	SPARE			
50			42-TNK-400 HEAT TRACE	1	20	13	14	20	1	42-TNK-400 LCP	200		
	2880		FUTURE SPRINGDALE CP (NOTE 2)	1	30	15	16	20	1	SPARE			
		2880	FUTURE FAYETTEVILLE CP (NOTE 2)	1	30	17	18	20	1	SPARE			
			SPARE	1	20	19	20	20	1	SPARE			
			SPARE	1	20	21	22	20	1	LTG - MV ELEC RM 113		330	
		330	LTG - MV ELEC RM 114	1	20	23	24	20	1	RECP - MV ELEC RM 113			720
720			RECP - MV ELEC RM 114	1	20	25	26	20	1	LTG - HALL 112	66		
	1080		RECP - PUMP ROOM SOUTH	1	20	27	28	20	1	LTG - EXTERIOR SOUTH		660	
			SPARE	1	20	29	30	20	1	RECP - EXTERIOR SOUTH			360
			SPARE	1	20	31	32	20	1	SPARE			
			SPARE	1	20	33	34	20	1	SPARE			
			SPACE	-	-	35	36	20	1	SPARE			
			SPACE	-	-	37	38	-	-	SPACE			
			SPACE	-	-	39	40	-	-	SPACE			
			SPACE	-	-	41	42	-	-	SPACE			
2593			TOTAL "A"		4582					TOTAL "A"	1989		
	5318		TOTAL "B"		7700					TOTAL "B"		2382	
		3510	TOTAL "C"		4990					TOTAL "C"			1480
			TOTAL =		17272								

PANELBOARD SCHEDULE 42-LP-2
NO SCALE

PANELBOARD: 43-LP-3 | BUS: COPPER | MAINS: 3P-100A MAIN BREAKER
SERVICE: 120/208V, 3PH, 4W, S/N | RATING: 225A | LOCATION: ELECTRICAL BUILDING
MOUNTING: SURFACE

PHASE "A" V.A.	PHASE "B" V.A.	PHASE "C" V.A.	LOAD	P	BKR	CKT #	CKT #	BKR	P	LOAD	PHASE "A" V.A.	PHASE "B" V.A.	PHASE "C" V.A.
2080			43-CU-01	2	40	1	2	20	1	43-LCP-101	500		
	2080		-	-	-	3	4	20	1	43-LCP-104		500	
		2080	43-CU-02	2	40	5	6	20	1	SPARE			
2080			-	-	-	7	8	20	1	SPARE			
	344		43-FC-01	2	20	9	10	20	1	LTG - GENERATOR BUILDING		352	
		344	-	-	-	11	12	20	1	RECP - EXTERIOR			360
344			43-FC-02	2	20	13	14	20	1	RECP - GENERATOR BUILDING	720		
	344		-	-	-	15	16	20	1	LTG - EXTERIOR		300	
		2000	43-UPS-101	2	70	17	18	20	1	SPARE			
2000			-	-	-	19	20	20	1	SPARE			
			SPARE	1	20	21	22	20	1	SPARE			
			SPARE	1	20	23	24	20	1	SPARE			
			SPACE	-	-	25	26	-	-	SPACE			
			SPACE	-	-	27	28	-	-	SPACE			
			SPACE	-	-	29	30	-	-	SPACE			
6504			TOTAL "A"		7724					TOTAL "A"	1220		
	2768		TOTAL "B"		3920					TOTAL "B"		1152	
		4424	TOTAL "C"		4784					TOTAL "C"			360
			TOTAL =		16428								

PANELBOARD SCHEDULE 43-LP-3
NO SCALE

PANELBOARD: 42-LP-4 (UPS) | BUS: COPPER | MAINS: 2P-70A MAIN BREAKER
SERVICE: 120/240V, 1PH, 3W, S/N | RATING: 100A | LOCATION: PUMP STATION LOW VOLTAGE ELECTRICAL ROOM
MOUNTING: SURFACE

PHASE "L1" V.A.	PHASE "L2" V.A.	LOAD	P	BKR	CKT #	CKT #	BKR	P	LOAD	PHASE "L1" V.A.	PHASE "L2" V.A.
1000		42-NET-100	1	20	1	2	20	1	ACP-1	500	
	500	42-FACP-100	1	20	3	4	20	1	RECP - CONTROL ROOM 107		540
500		42-SEC-100	1	20	5	6	20	1	SECURITY CAMERA C-4	50	
	50	SECURITY CAMERA C-5	1	20	7	8	20	1	SECURITY CAMERA C-6		50
50		CAMERA C-7 MEDIA CONVERTER	1	20	9	10	20	1	42-CP-100	500	
	200	FIT-301,FIT-401	1	20	11	12	20	1	FIT-101 (FUTURE),FIT-201 (FUTURE)		
1134		LTG - PUMP ROOM 111 NORTH	1	20	13	14	20	1	LTG - PUMP ROOM 111 SOUTH	1134	
		SPARE	1	20	15	16	20	1	SPARE		
		SPACE	-	-	17	18	-	-	SPACE		
		SPACE	-	-	19	20	-	-	SPACE		
2684		TOTAL "L1"		4868					TOTAL "L1"	2184	
	750	TOTAL "L2"		1340					TOTAL "L2"		590
		TOTAL =		6208							

PANELBOARD SCHEDULE 42-LP-4
NO SCALE

PANELBOARD: 43-LP-5 (UPS) | BUS: COPPER | MAINS: 2P-70A MAIN BREAKER
SERVICE: 120/240V, 1PH, 3W, S/N | RATING: 100A | LOCATION: ELECTRICAL BUILDING
MOUNTING: SURFACE

PHASE "L1" V.A.	PHASE "L2" V.A.	LOAD	P	BKR	CKT #	CKT #	BKR	P	LOAD	PHASE "L1" V.A.	PHASE "L2" V.A.
1000		43-NET-100	1	20	1	2	20	1	SECURITY CAMERA C-1	50	
	50	SECURITY CAMERA C-2	1	20	3	4	20	1	SECURITY CAMERA C-3		50
500		43-CP-100	1	20	5	6	20	1	ACP-2	500	
	1000	43-MCP-100	1	20	7	8	20	1	SPARE		
		SPARE	1	20	9	10	20	1	SPARE		
		SPARE	1	20	11	12	20	1	SPARE		
		SPACE	-	-	13	14	-	-	SPACE		
		SPACE	-	-	15	16	-	-	SPACE		
		SPACE	-	-	17	18	-	-	SPACE		
		SPACE	-	-	19	20	-	-	SPACE		
1500		TOTAL "L1"		2050					TOTAL "L1"	550	
	1050	TOTAL "L2"		1100					TOTAL "L2"		50
		TOTAL =		3150							

PANELBOARD SCHEDULE 43-LP-5
NO SCALE

NOTES:
1. SEE SHEETS E-00-001 AND E-00-002 FOR ELECTRICAL LEGENDS AND ABBREVIATIONS & NOTES.
2. DEDICATED CIRCUITS FOR FUTURE CATHODIC PROTECTION OF FAYETTEVILLE AND SPRINGDALE PIPES. CONDUCTORS SHALL BE TERMINATED ON BREAKER AND ROUTED TO PB-6 TO BE LEFT DEENERGIZED FOR FUTURE USE.

(SCALE BAR IS 4" AT FULL SCALE) 0 1/2 1 2 3 4

BLACK & VEATCH
Black & Veatch Corporation
Kansas City, Missouri

olsson

THIS DOCUMENT WAS ORIGINALLY ISSUED AND SEALED ON JANUARY 24, 2023 BY KIRK H. IVY, A LICENSED PROFESSIONAL ENGINEER IN THE STATE OF ARKANSAS, E-16494

BEAVER WATER DISTRICT

WESTERN CORRIDOR PUMP STATION

100% SET

REVISIONS AND RECORD OF ISSUE

DESIGNED: HNE
DETAILED: RC
CHECKED: WML
APPROVED: KHI
DATE: JANUARY 24, 2023
PROJECT NO.: 405654

GENERAL

ELECTRICAL

PANEL SCHEDULES

E-00-615

PLOTTED: 1/20/2023 11:23:21 AM
FILE: C:\PW_WORKING\BVW_AMERICAS\D1129188\E-00-615..DWG
FD11000
D11000

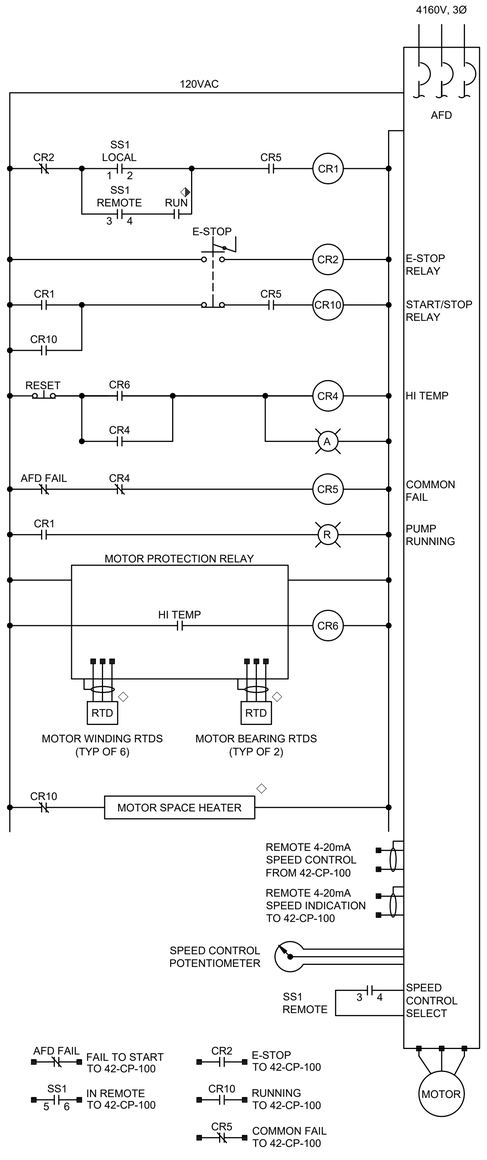

SPRINGDALE PUMP 42-PSC-301

(SIMILAR FOR 42-PSC-302, 42-PSC-303, 42-PSC-401,42-PSC-402 & 42-PSC-403)

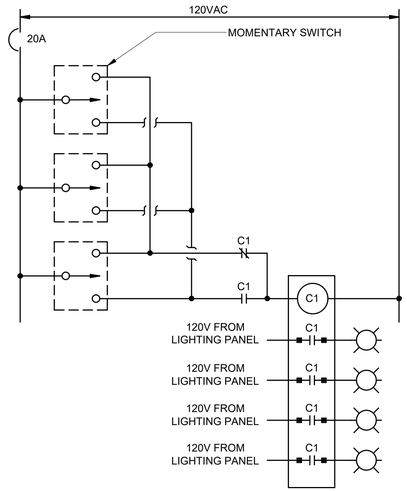

LIGHTING CONTACTOR C1

(SIMILAR FOR C2, C3, C4)

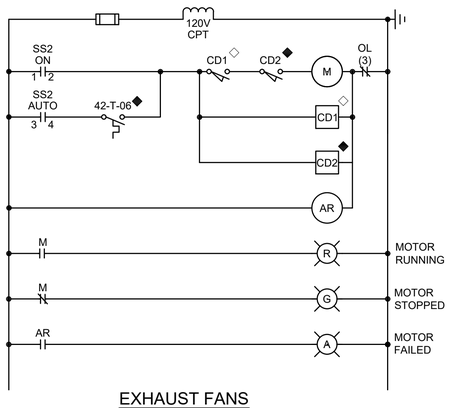

EXHAUST FANS

FAN	CD1	CD2
42-EF-01	42-CD-01	42-CD-08
42-EF-02	42-CD-02	42-CD-07
42-EF-03	42-CD-03	42-CD-06
42-EF-04	42-CD-04	42-CD-05

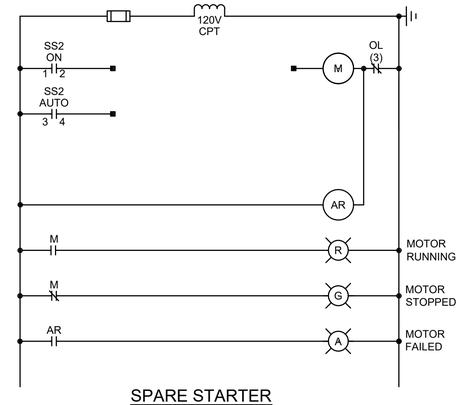

SPARE STARTER

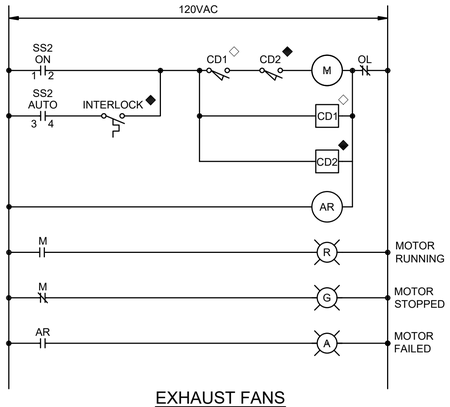

EXHAUST FANS

FAN	CD1	CD2	INTERLOCK
42-EF-05	42-CD-10	42-CD-09	42-T-05
42-EF-07	42-CD-14	42-CD-15	42-T-08

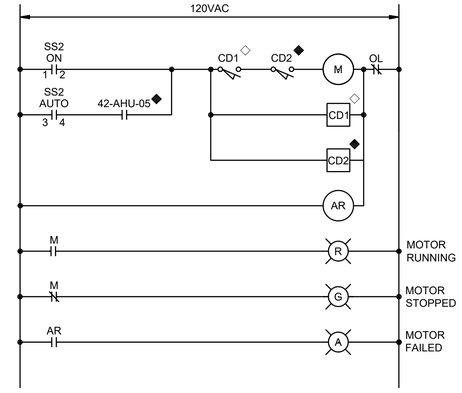

EXHAUST FAN

FAN	CD1	CD2
42-EF-06	42-CD-13	42-CD-14

SCHEMATIC SYMBOL LEGEND

- ◆ REMOTE FROM AFD/STARTER AND DRIVEN EQUIPMENT
- ◈ AT AFD
- ◇ AT DRIVEN EQUIPMENT
- ◑ AT 42-CP-100
- ○ AT VALVE

SELECTOR SWITCH DEVELOPMENT

SS1

CONTACTS	POSITION		
	LOCAL	OFF	REMOTE
1-2	X		
3-4			X
5-6			X

SS2

CONTACTS	POSITION		
	ON	OFF	AUTO
1-2	X		
3-4			X
5-6			X

NOTES:

1. SEE SHEETS E-00-001 AND E-00-002 FOR ELECTRICAL LEGENDS AND ABBREVIATIONS & NOTES.
2. NOT USED.
3. CONTROL SETTINGS, ALARM LIMITS, TIME SETTINGS AND SIMILAR ADJUSTABLE LIMITS ARE INTENDED TO BE FOR INITIAL STARTUP. ADJUSTABLE SETTINGS SHALL BE TESTED AND CHANGED BY CONTRACTOR, IF REQUIRED FOR PROPER SEQUENCING AND OPERATION.
4. UNLESS OTHERWISE NOTED, DEVICES SHOWN ON THIS DRAWING SHALL BE SUPPLIED AS AN INTEGRAL PART OF THE AFD/STARTER. DEVICES LOCATED OUTSIDE OF OR REMOTE FROM THE AFD/STARTER SHALL BE IDENTIFIED WITH A LOCATION SYMBOL AS DEFINED IN THE SCHEMATIC SYMBOL LEGEND.

BLACK & VEATCH
Black & Veatch Corporation
Kansas City, Missouri

olsson

THIS DOCUMENT WAS ORIGINALLY ISSUED AND SEALED ON JANUARY 24, 2023 BY KIRK H. IVY, A LICENSED PROFESSIONAL ENGINEER IN THE STATE OF ARKANSAS, E-16494

BEAVER WATER DISTRICT

WESTERN CORRIDOR PUMP STATION

100% SET

REVISIONS AND RECORD OF ISSUE

DESIGNED:	HNE
DETAILED:	RC
CHECKED:	WML
APPROVED:	KHI
DATE:	JANUARY 24, 2023
PROJECT NO.:	405654

GENERAL

ELECTRICAL

SCHEMATICS

E-00-616

120 OF 159

PLOTTED: 1/20/2023 11:28:48 AM
FILE: C:\PW_WORKING\BVW_AMERICAS\D1129188\E-00-616.DWG
PSTYLE: D71000
DTMOD:

(SCALE BAR IS 4" AT FULL SCALE) 0 1/2 1 2 3 4

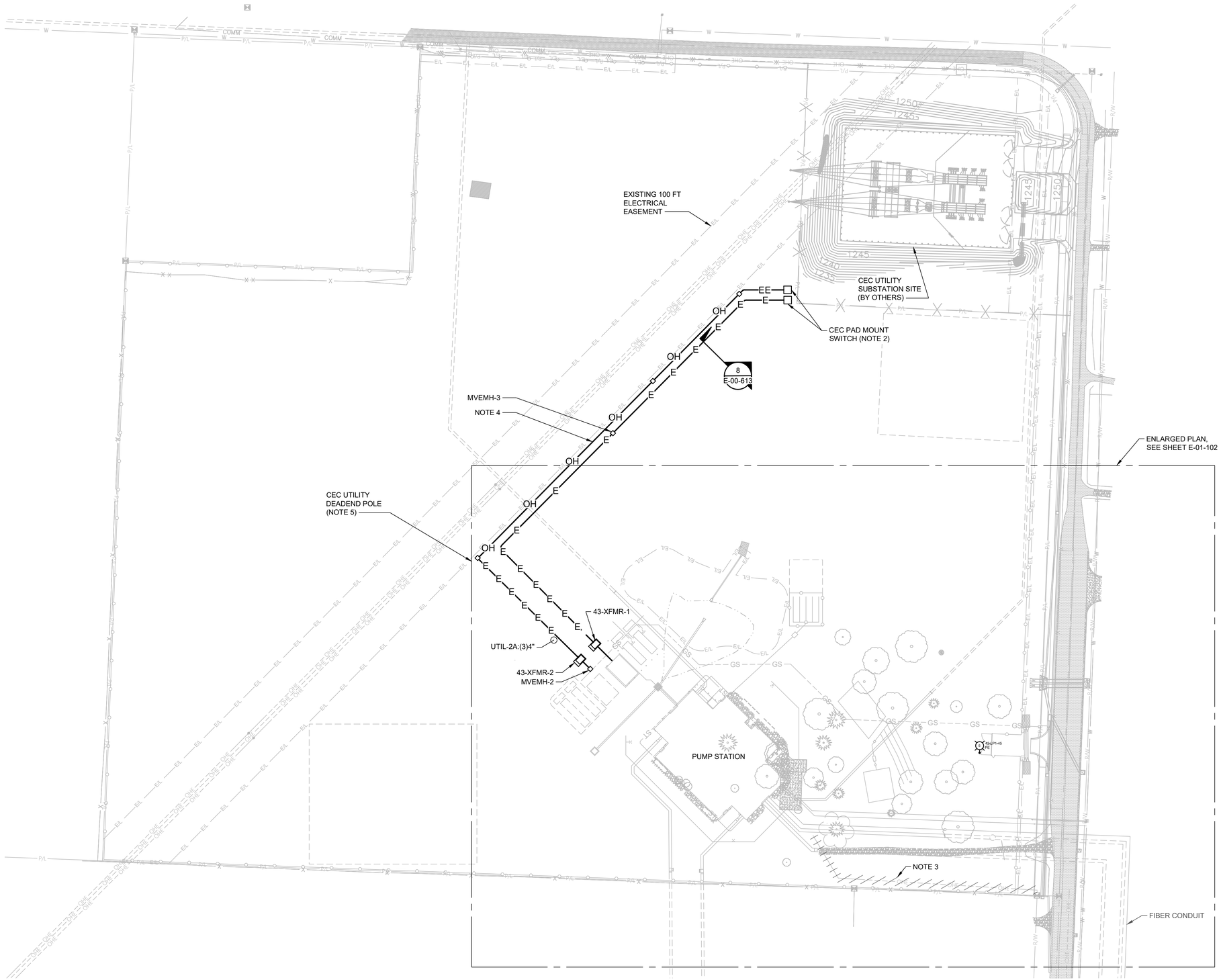

OVERALL SITE PLAN
1"=80'

80' 40' 0 80' 160'
1"=80'

NOTES:

1. SEE SHEETS E-00-001 AND E-00-002 FOR ELECTRICAL LEGENDS AND ABBREVIATIONS & NOTES.
2. PAD MOUNT SWITCH FURNISHED AND INSTALLED BY CEC UTILITY. CONTRACTOR SHALL COORDINATE CONDUIT ENTRY TO SWITCH WITH CEC UTILITY TO ENSURE NO METAL IS INSTALLED BETWEEN CONDUIT PENETRATIONS. EACH PHASE IS IN A DEDICATED CONDUIT, AND NO METAL BETWEEN CONDUITS SHALL BE PERMITTED TO PREVENT INDUCTIVE HEATING OF THE EQUIPMENT.
3. CONTRACTOR SHALL COORDINATE WITH UTILITY TO DEMOLISH EXISTING OVERHEAD DISTRIBUTION LINES AND POLES BACK TO MILLER ROAD.
4. OVERHEAD DISTRIBUTION WORK BY CEC UTILITY.
5. CONTRACTOR SHALL PROVIDE RISER CONDUIT AND WEATHERHEAD AS REQUIRED BY CEC UTILITY.

(SCALE BAR IS 4" AT FULL SCALE) 0 1/2 1 2 3 4

BLACK & VEATCH
Black & Veatch Corporation
Kansas City, Missouri

olsson

THIS DOCUMENT WAS ORIGINALLY ISSUED AND SEALED ON JANUARY 24, 2023 BY KIRK H. IVY, A LICENSED PROFESSIONAL ENGINEER IN THE STATE OF ARKANSAS, E-16494

BEAVER WATER DISTRICT

WESTERN CORRIDOR PUMP STATION

100% SET

REVISIONS AND RECORD OF ISSUE	
DESIGNED:	HNE
DETAILED:	RC
CHECKED:	WML
APPROVED:	KHI
DATE: JANUARY 24, 2023	
PROJECT NO.:	405654

SITE

ELECTRICAL

OVERALL SITE PLAN

E-01-101

121 OF 159

PLOTTED: 1/23/2023 9:14:39 AM
FILE: C:\PW_WORKINGBVW_AMERICAS\D1129188E-01-101.DWG
FD1:1000
D1:1000

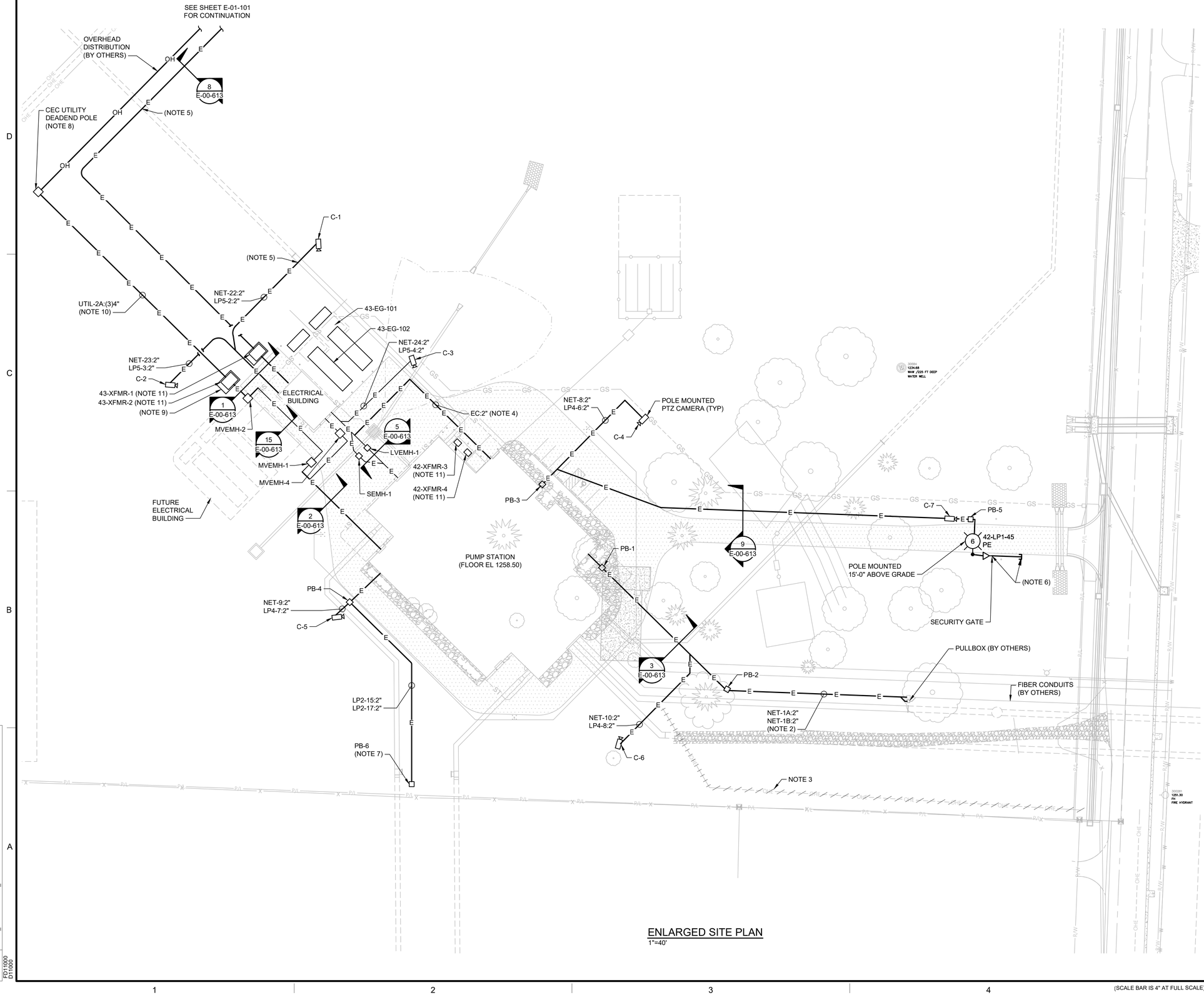

ENLARGED SITE PLAN
1"=40'

40' 20' 0 40' 80'
1"=40'

NOTES:

1. SEE SHEETS E-00-001 AND E-00-002 FOR ELECTRICAL LEGENDS AND ABBREVIATIONS & NOTES.
2. CONDUITS SHALL BE INSTALLED BY THE ELECTRICAL CONTRACTOR. FIBER OPTIC CABLES SHALL BE ROUTED THROUGH CONDUITS AND TERMINATED ON NETWORK RACK BY OTHERS.
3. CONTRACTOR SHALL COORDINATE WITH UTILITY TO DEMOLISH EXISTING OVERHEAD DISTRIBUTION LINES AND POLES BACK TO INTERSECTION AT MILLER ROAD.
4. DEDICATED CONDUIT FOR FIRE ALARM SIGNALS TO ELECTRICAL BUILDING.
5. DUCT BANK SHALL BE REINFORCED WITHIN THESE LOCATIONS TO PROTECT FROM FUTURE EXCAVATION AS SPECIFIED IN 16050 SECTION 3.6-D. METAL REINFORCING SHALL NOT BE INSTALLED IN BETWEEN CONDUITS. EACH PHASE IS IN A DEDICATED CONDUIT. ALL METAL REINFORCING SHALL BE ONLY ON THE OUTSIDE OF ALL THREE CONDUITS GROUPED TOGETHER.
6. CONTRACTOR SHALL STUB UP AND CAP CONDUITS FOR CIRCUITS CP-65, MCC-38 AND NET-37 AT SOUTH SIDE OF GATE ENTRANCE. CONDUIT FOR CIRCUIT ACP1-1 SHALL STUB UP AND BE CAPPED APPROXIMATELY 20' FROM GATE ENTRANCE.
7. CONDUCTORS SHALL BE LEFT DEENERGIZED WITHIN PULLBOX FOR FUTURE USE.
8. CONTRACTOR SHALL PROVIDE RISER CONDUIT AND WEATHERHEAD AS REQUIRED BY CEC UTILITY.
9. SEE SHEET C-01-502 FOR TRANSFORMER EQUIPMENT PAD DETAIL.
10. CONDUITS WITHIN THIS DUCT BANK SHALL BE ARRANGED IN CLOSE PROXIMITY OF EACH OTHER, METAL REINFORCING SHALL NOT BE INSTALLED IN BETWEEN CONDUITS. EACH PHASE IS IN A DEDICATED CONDUIT. ALL METAL REINFORCING SHALL BE ONLY ON THE OUTSIDE OF ALL THREE CONDUITS GROUPED TOGETHER. SEE REQUIREMENTS IN SPECIFICATION 16050 SECTION 3.6 D.
11. TRANSFORMER SHALL BE FURNISHED BY OWNER TO BE INSTALLED BY CONTRACTOR.

BLACK & VEATCH
Black & Veatch Corporation
Kansas City, Missouri

olsson

THIS DOCUMENT WAS ORIGINALLY ISSUED AND SEALED ON JANUARY 24, 2023 BY KIRK H. IVY, A LICENSED PROFESSIONAL ENGINEER IN THE STATE OF ARKANSAS, E-16494

BEAVER WATER DISTRICT

WESTERN CORRIDOR PUMP STATION

100% SET

REVISIONS AND RECORD OF ISSUE

DESIGNED:	HNE
DETAILED:	RC
CHECKED:	WML
APPROVED:	KHI
DATE:	JANUARY 24, 2023
PROJECT NO.:	405654

SITE

ELECTRICAL

ENLARGED SITE PLAN

E-01-102

122 OF 159

PLOTTED: 1/23/2023 9:23:53 AM
FILE: C:\PW_WORKINGBVW_AMERICAS\D1129188\E-01-102.DWG
ED1000
D1004

(SCALE BAR IS 4" AT FULL SCALE) 0 1/2 1 2 3 4

SEE DRAWINGS E-42-102,
E-42-106 AND E-42-110

SEE DRAWINGS E-42-103,
E-42-107 AND E-42-111

8' 4' 0' 8' 16'
1/8" = 1'-0"

SEE DRAWINGS E-42-104,
E-42-108 AND E-42-112

SEE DRAWINGS E-42-105.
E-42-109 AND E-42-113

POWER PLAN
1/8" = 1'-0"

NOTE:
1. SEE SHEETS E-00-001 AND E-00-002 FOR ELECTRICAL LEGENDS AND ABBREVIATIONS & NOTES.

(SCALE BAR IS 4" AT FULL SCALE) 0 1/2 1 2 3 4

PLOTTED: 1/20/2023 7:32:10 AM
FILE: BIM 360://405654 - BWD Western Corridor Pump Station/405654-42-PUMP STATION.rvt
D11000

BLACK & VEATCH
Black & Veatch Corporation
Kansas City, Missouri

olsson

THIS DOCUMENT WAS ORIGINALLY ISSUED AND SEALED ON JANUARY 24, 2023 BY KIRK H. IVY, A LICENSED PROFESSIONAL ENGINEER IN THE STATE OF ARKANSAS, E-16494

BEAVER WATER DISTRICT

WESTERN CORRIDOR PUMP STATION

100% SET

REVISIONS AND RECORD OF ISSUE

DESIGNED:	HNE
DETAILED:	RC
CHECKED:	WML
APPROVED:	KHI
DATE:	JANUARY 24, 2023
PROJECT NO.:	405654

PUMP STATION

ELECTRICAL

OVERALL POWER PLAN

E-42-101

123 OF 159

4' 2' 0' 4' 8'

1/4" = 1'-0"

#4 GROUND TO 42-LT-1

#4/0 GROUND TO 42-MCC-1 (TYP OF 2)

#4/0 GROUND TO FOUNDATION REINFORCING

#4/0 GROUND RING

GROUND ROD (TYP)

#4/0 GROUND TO 42-XFMR-3 (TYP OF 2)

#4/0 GROUND TO 42-XFMR-4 (TYP OF 2)

SEE SHEET E-01-102 FOR CONTINUATION

#4/0 GROUND TO BUILDING STEEL

MOTION DETECTOR (TYP)

DOOR CONTACT (TYP)

CARD READER (TYP)

DOOR STRIKE (TYP)

DOOR 110B OPERATOR/CONTROL STATION

WORKSHOP
109

MECHANICAL ROOM
108

LOW VOLTAGE ELECTRICAL ROOM
109

PUMP ROOM
111

AREA TYPE 12

42-CD-09
42-EUH-14
42-WH-03
42-CD-13
42-CP-01
42-EWH-01
42-AHU-05
42-T-05
42-TP-01
C-12
42-FACP-100
42-NET-100
42-UPS-101
42-LP-4
42-WH-01
42-XFMR-3
(NOTE 2)
42-XFMR-4
42-CU-06
42-CU-07
42-EUH-13
42-EF-05
42-CD-10
42-CU-05
42-EF-05 STARTER
42-FC-02
C-13
42-FC-01
42-SEC-100
ACP-1
42-MCC-1
42-T-03
(ABOVE)
42-LT-1
42-LP-1
(BELOW)
42-EUH-03
ELECTRICAL EQUIPMENT PAD (TYP)
C-10
42-EUH-05
42-EUH-04
FUTURE VALVE DISCONNECT (TYP OF 4)
42-CD-01
42-EF-01
42-EF-02
42-CD-02
42-TNK-100
42-VBF-102
42-VBF-105
42-VBF-108
42-VBF-111
42-VCK-101
42-VCK-102
42-VCK-103
42-VCK-104
42-PSC-101
42-PSC-102
42-PSC-103
42-PSC-104
#4/0 GROUND TO HH-1
#4/0 GROUND TO HH-2
#6 GROUND TO BRIDGE CRANE STEEL
42-EUH-06
HH-1
(NOTE 4)
C-9
PULLBOX
(NOTE 3)

MATCHLINE - SEE SHEET E-42-103

MATCHLINE - SEE SHEET E-42-104

ENLARGED POWER AND GROUNDING PLAN (1 OF 4)

1/4" = 1'-0"

NOTES:
1. SEE SHEETS E-00-001 AND E-00-002 FOR ELECTRICAL LEGENDS AND ABBREVIATIONS & NOTES.
2. SEE SHEET C-01-502 FOR TRANSFORMER EQUIPMENT PAD DETAIL.
3. CONTRACTOR SHALL WALL MOUNT PULL BOX WITHIN TRENCH. SEE DETAIL AA ON SHEET E-00-502.
4. SEE STRUCTURAL SHEETS FOR HANDHOLE DETAILS.

(SCALE BAR IS 4" AT FULL SCALE) 0 1/2 1 2 3 4

PLOTTED: 1/20/2023 7:35:01 AM
FILE: BIM 360://405654 - BWD Western Corridor Pump Station/405654-42-PUMP STATION.rvt
D11000

BLACK & VEATCH
Black & Veatch Corporation
Kansas City, Missouri

olsson

THIS DOCUMENT WAS ORIGINALLY ISSUED AND SEALED ON JANUARY 24, 2023 BY KIRK H. IVY, A LICENSED PROFESSIONAL ENGINEER IN THE STATE OF ARKANSAS, E-16494

BEAVER WATER DISTRICT

WESTERN CORRIDOR PUMP STATION

100% SET

REVISIONS AND RECORD OF ISSUE

DESIGNED:	HNE
DETAILED:	RC
CHECKED:	WML
APPROVED:	KHI
DATE:	JANUARY 24, 2023
PROJECT NO.:	405654

PUMP STATION

ELECTRICAL

ENLARGED POWER AND GROUNDING PLAN (1 OF 4)

E-42-102

124 OF 159

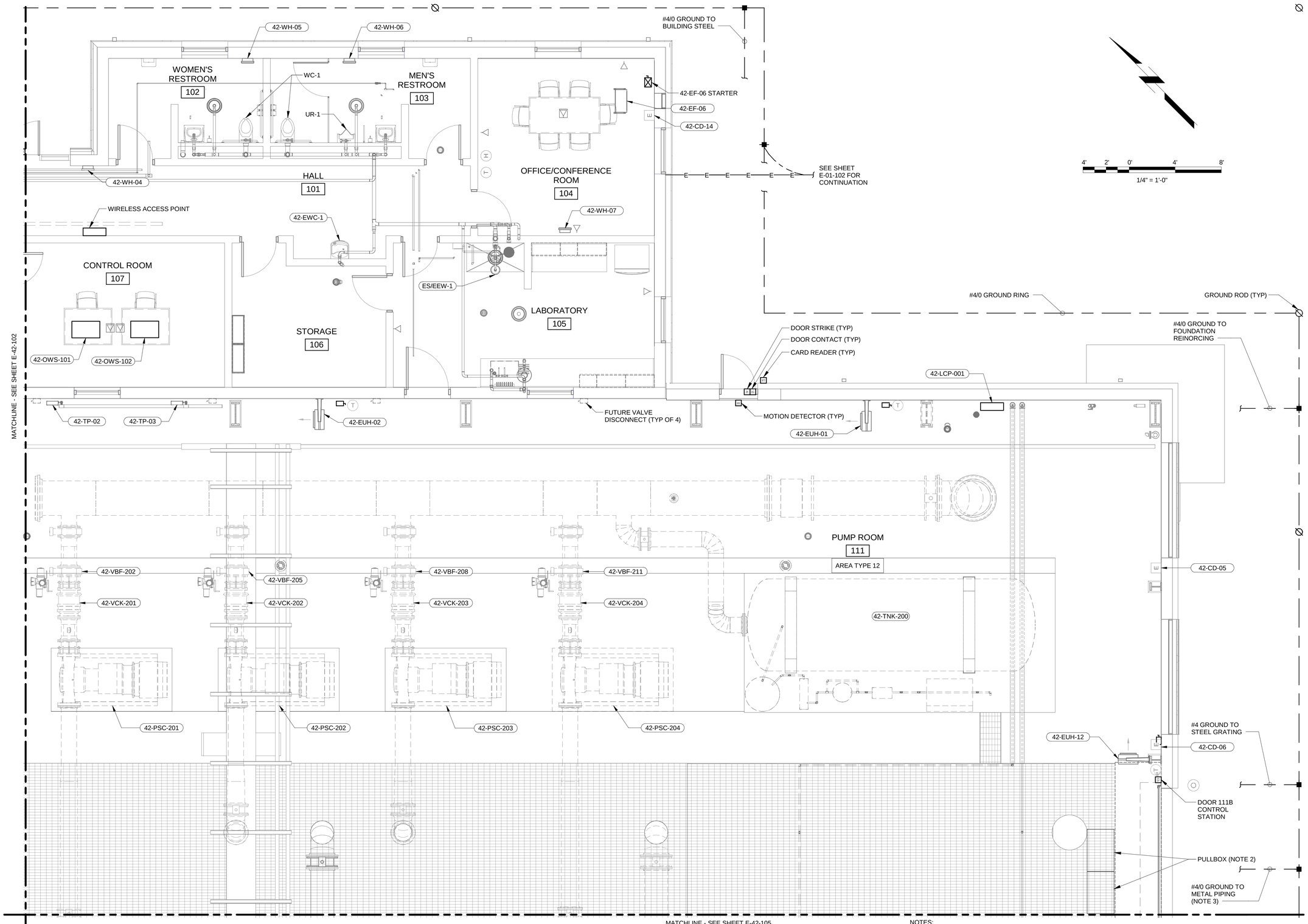

ENLARGED POWER AND GROUNDING PLAN (2 OF 4)

1/4" = 1'-0"

MATCHLINE - SEE SHEET E-42-105

NOTES:
1. SEE SHEETS E-00-001 AND E-00-002 FOR ELECTRICAL LEGENDS AND ABBREVIATIONS & NOTES.
2. CONTRACTOR SHALL WALL MOUNT PULL BOX WITHIN TRENCH. SEE DETAIL AA ON SHEET E-00-502.
3. ONLY METAL PIPING ISOLATED FROM THE CATHODIC PROTECTION SYSTEM SHALL BE BONDED TO GROUND.

(SCALE BAR IS 4" AT FULL SCALE) 0 1/2 1 2 3 4

PLOTTED: 1/20/2023 7:35:10 AM
FILE: BIM 360://405654 - BWD Western Corridor Pump Station\405654-42-PUMP STATION.rvt
D11000

BLACK & VEATCH
Black & Veatch Corporation
Kansas City, Missouri

olsson

THIS DOCUMENT WAS ORIGINALLY ISSUED AND SEALED ON JANUARY 24, 2023 BY KIRK H. IVY, A LICENSED PROFESSIONAL ENGINEER IN THE STATE OF ARKANSAS, E-16494

BEAVER WATER DISTRICT

WESTERN CORRIDOR PUMP STATION

100% SET

REVISIONS AND RECORD OF ISSUE

DESIGNED:	HNE
DETAILED:	RC
CHECKED:	WML
APPROVED:	KHI
DATE:	JANUARY 24, 2023
PROJECT NO.:	405654

PUMP STATION

ELECTRICAL

ENLARGED POWER AND GROUNDING PLAN (2 OF 4)

E-42-103

125 OF 159

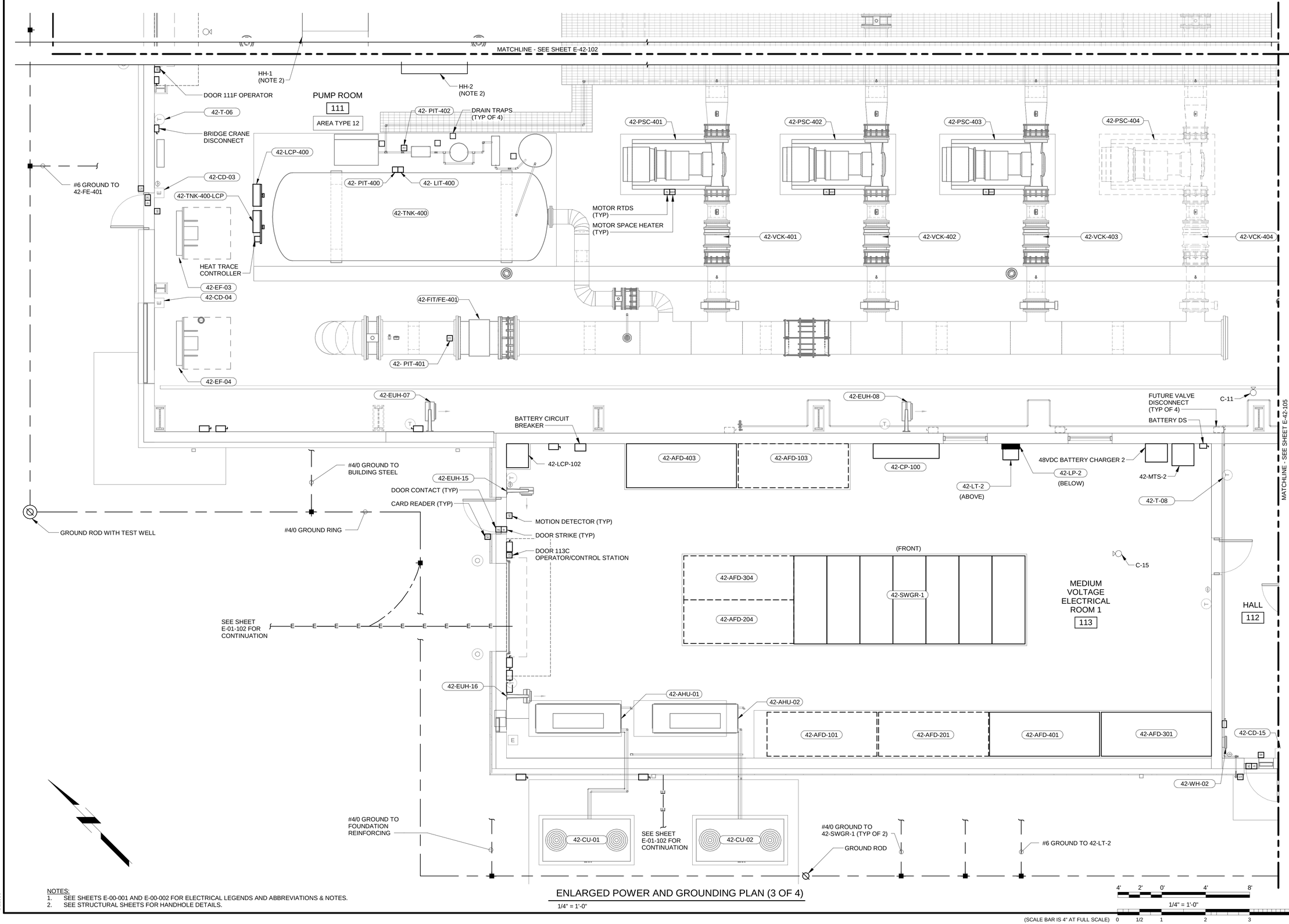

NOTES:
1. SEE SHEETS E-00-001 AND E-00-002 FOR ELECTRICAL LEGENDS AND ABBREVIATIONS & NOTES.
2. SEE STRUCTURAL SHEETS FOR HANDHOLE DETAILS.

ENLARGED POWER AND GROUNDING PLAN (3 OF 4)

1/4" = 1'-0"

(SCALE BAR IS 4" AT FULL SCALE) 0 1/2 1 2 3 4 — 4' 2' 0' 4' 8' — 1/4" = 1'-0"

BLACK & VEATCH
Black & Veatch Corporation
Kansas City, Missouri

olsson

THIS DOCUMENT WAS ORIGINALLY ISSUED AND SEALED ON JANUARY 24, 2023 BY KIRK H. IVY, A LICENSED PROFESSIONAL ENGINEER IN THE STATE OF ARKANSAS, E-16494

BEAVER WATER DISTRICT

WESTERN CORRIDOR PUMP STATION

100% SET

REVISIONS AND RECORD OF ISSUE	
DESIGNED:	HNE
DETAILED:	RC
CHECKED:	WML
APPROVED:	KHI
DATE:	JANUARY 24, 2023
PROJECT NO.:	405654

PUMP STATION

ELECTRICAL

ENLARGED POWER AND GROUNDING PLAN (3 OF 4)

E-42-104

126 OF 159

PLOTTED: 1/20/2023 7:35:16 AM
FILE: BIM 360://405654 - BWD Western Corridor Pump Station/405654-42-PUMP STATION.rvt
D11000

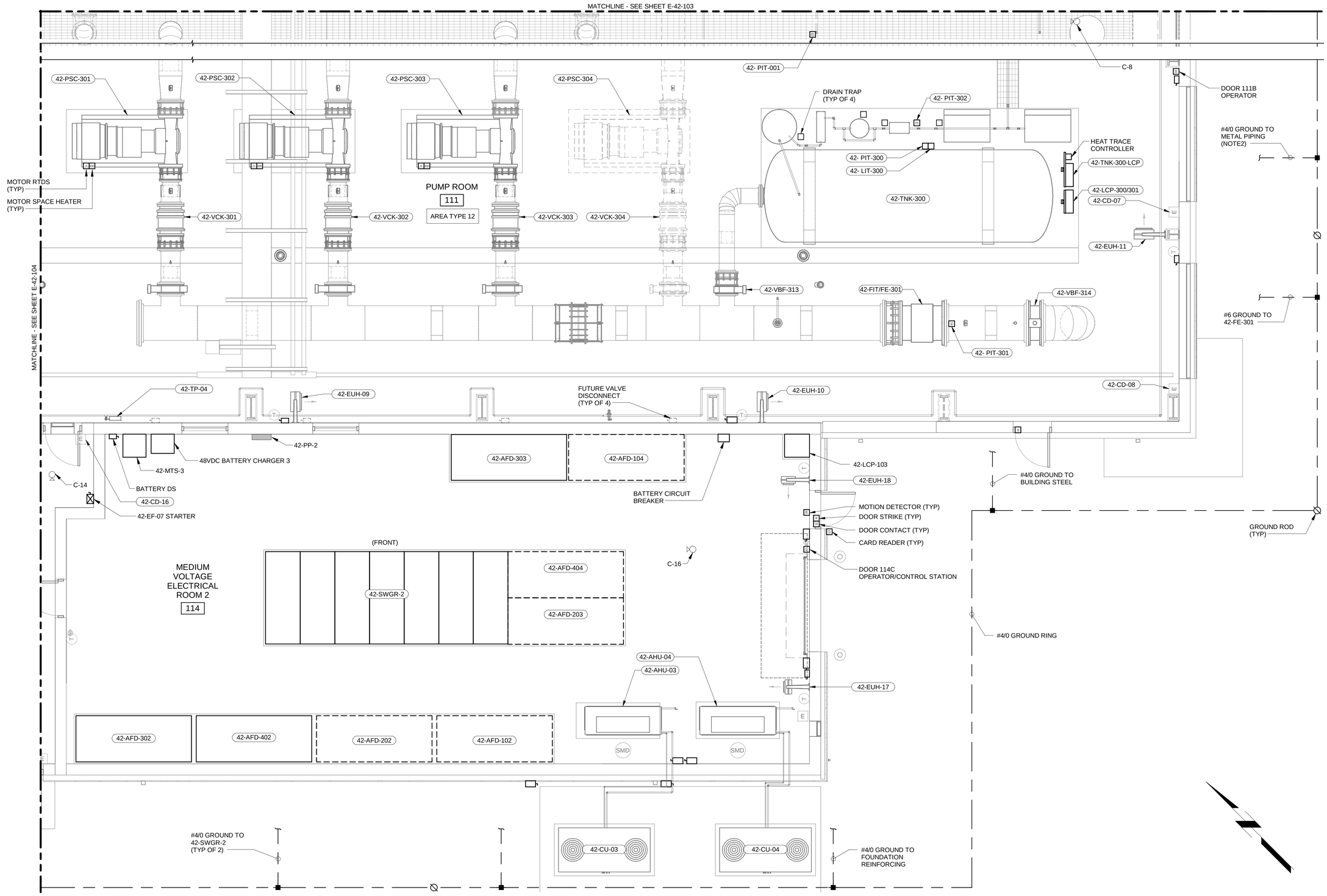

NOTES:

1. SEE SHEETS E-00-001 AND E-00-002 FOR ELECTRICAL LEGENDS AND ABBREVIATIONS & NOTES.
2. ONLY METAL PIPING ISOLATED FROM THE CATHODIC PROTECTION SYSTEM SHALL BE BONDED TO GROUND.

ENLARGED POWER AND GROUNDING PLAN (4 OF 4)

1/4" = 1'-0"

4' 2' 0' 4' 8'

1/4" = 1'-0"

(SCALE BAR IS 4" AT FULL SCALE) 0 1/2 1 2 3 4

PLOTTED: 1/20/2023 7:35:21 AM
FILE: BIM 360://405654 - BWD Western Corridor Pump Station/405654-42-PUMP STATION.rvt
D:1000

BLACK & VEATCH
Black & Veatch Corporation
Kansas City, Missouri

olsson

THIS DOCUMENT WAS ORIGINALLY ISSUED AND SEALED ON JANUARY 24, 2023 BY KIRK H. IVY, A LICENSED PROFESSIONAL ENGINEER IN THE STATE OF ARKANSAS, E-16494

BEAVER WATER DISTRICT

WESTERN CORRIDOR PUMP STATION

100% SET

REVISIONS AND RECORD OF ISSUE

DESIGNED:	HNE
DETAILED:	RC
CHECKED:	WML
APPROVED:	KHI
DATE:	JANUARY 24, 2023
PROJECT NO.:	405654

PUMP STATION

ELECTRICAL

ENLARGED POWER AND GROUNDING PLAN (4 OF 4)

E-42-105

127 OF 159

4' 2' 0' 4' 8'

1/4" = 1'-0"

NOTE:

1. SEE SHEETS E-00-001 AND E-00-002 FOR ELECTRICAL LEGENDS AND ABBREVIATIONS & NOTES.

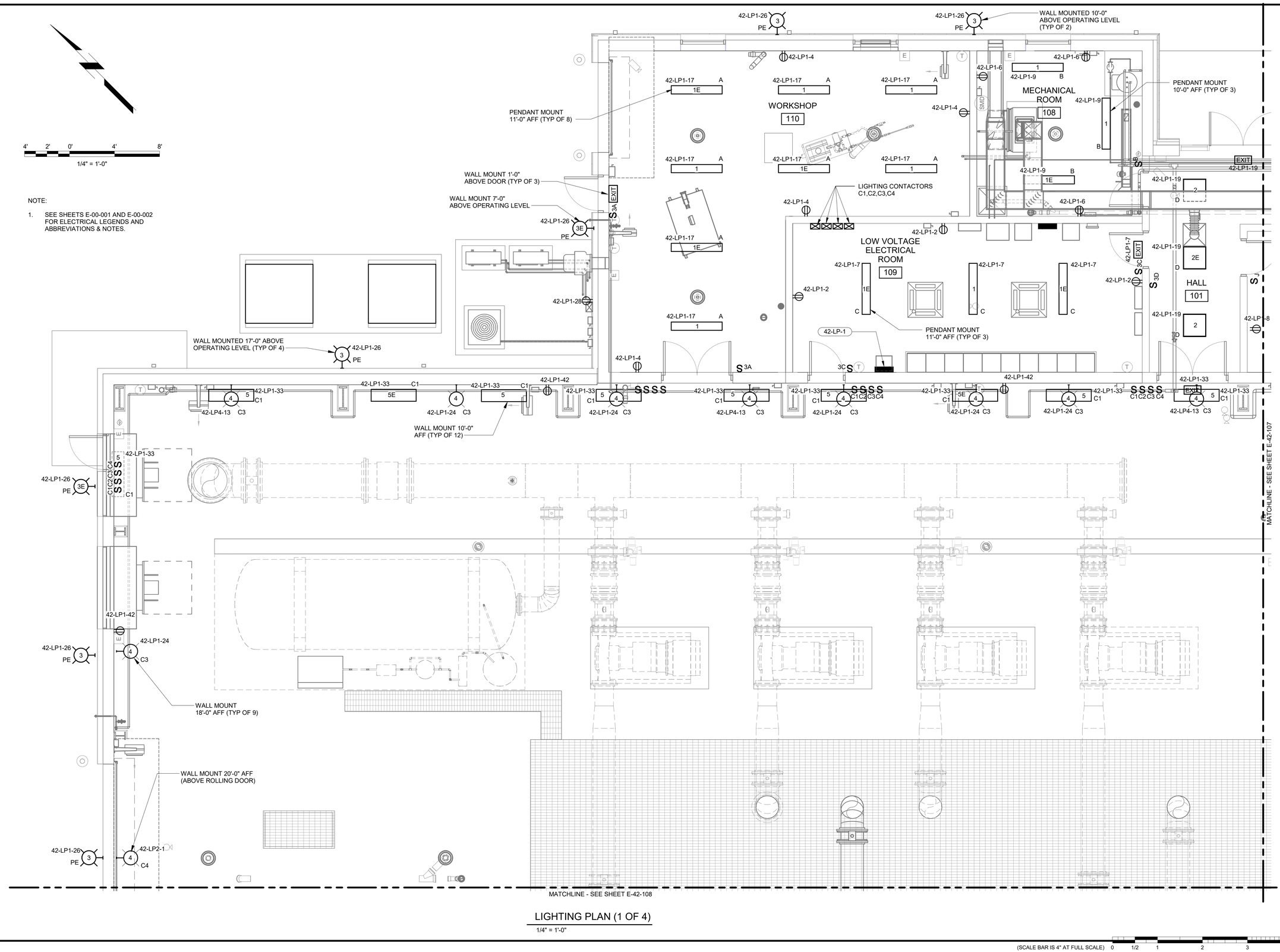

LIGHTING PLAN (1 OF 4)

1/4" = 1'-0"

(SCALE BAR IS 4" AT FULL SCALE) 0 1/2 1 2 3 4

PLOTTED: 1/23/2023 9:38:13 AM
FILE: BIM 360://405654 - BWD Western Corridor Pump Station/405654-42-PUMP STATION.rvt
D11000

BLACK & VEATCH

Black & Veatch Corporation
Kansas City, Missouri

olsson

THIS DOCUMENT WAS ORIGINALLY ISSUED AND SEALED ON JANUARY 24, 2023 BY KIRK H. IVY, A LICENSED PROFESSIONAL ENGINEER IN THE STATE OF ARKANSAS, E-16494

BEAVER WATER DISTRICT

WESTERN CORRIDOR PUMP STATION

100% SET

REVISIONS AND RECORD OF ISSUE

DESIGNED:	HNE
DETAILED:	RC
CHECKED:	WML
APPROVED:	KHI
DATE:	JANUARY 24, 2023
PROJECT NO.:	405654

PUMP STATION

ELECTRICAL

LIGHTING PLAN (1 OF 4)

E-42-106

128 OF 159

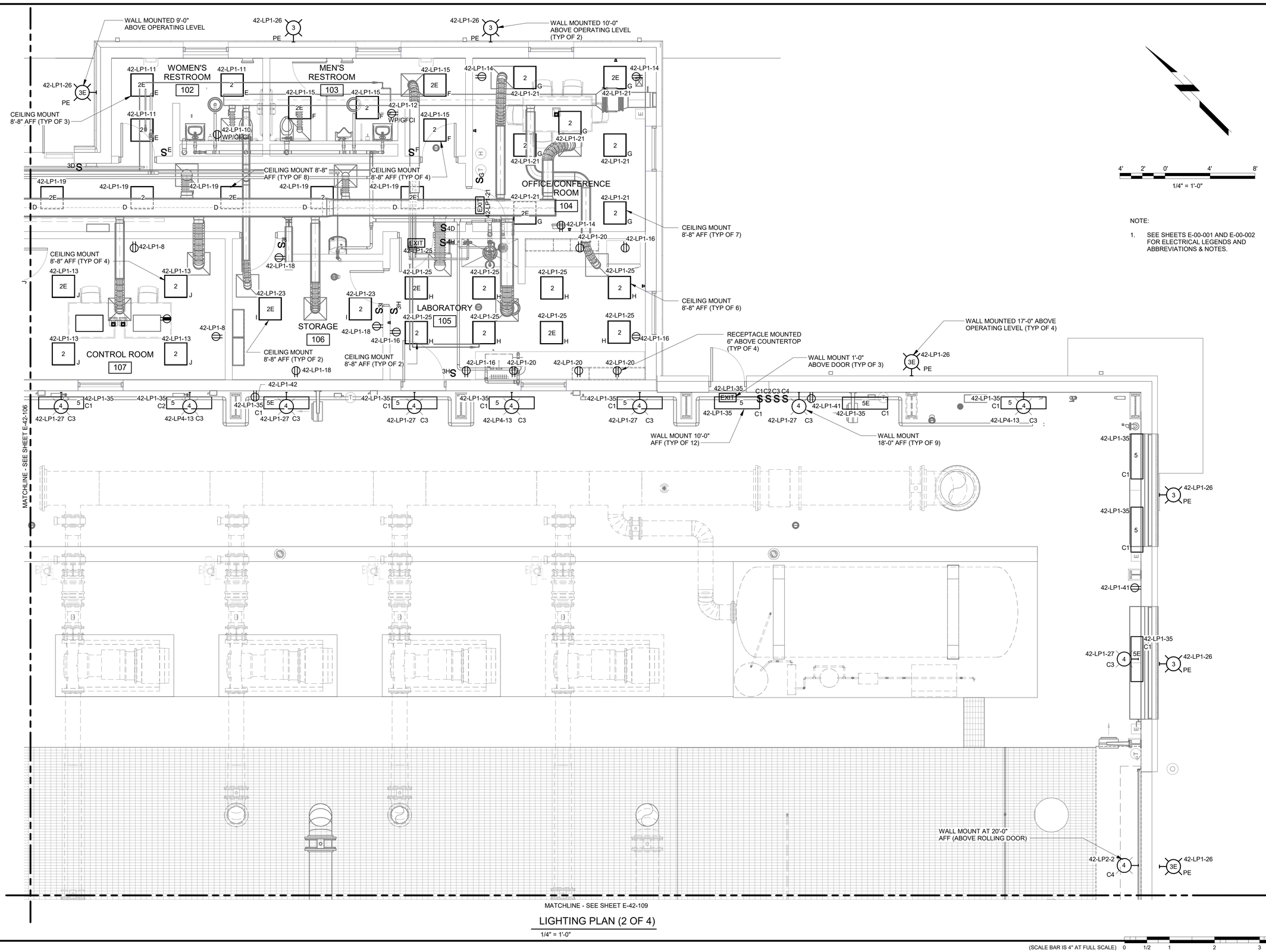

LIGHTING PLAN (2 OF 4)

1/4" = 1'-0"

4' 2' 0' 4' 8'

1/4" = 1'-0"

NOTE:

1. SEE SHEETS E-00-001 AND E-00-002 FOR ELECTRICAL LEGENDS AND ABBREVIATIONS & NOTES.

(SCALE BAR IS 4" AT FULL SCALE) 0 1/2 1 2 3 4

PLOTTED: 1/23/2023 9:38:18 AM
FILE: BIM 360://405654 - BWD Western Corridor Pump Station/405654-42-PUMP STATION.rvt
D11000

BLACK & VEATCH

Black & Veatch Corporation
Kansas City, Missouri

olsson

THIS DOCUMENT WAS ORIGINALLY ISSUED AND SEALED ON JANUARY 24, 2023 BY KIRK H. IVY, A LICENSED PROFESSIONAL ENGINEER IN THE STATE OF ARKANSAS, E-16494

BEAVER WATER DISTRICT

WESTERN CORRIDOR PUMP STATION

100% SET

REVISIONS AND RECORD OF ISSUE	
DESIGNED:	HNE
DETAILED:	RC
CHECKED:	WML
APPROVED:	KHI
DATE:	JANUARY 24, 2023
PROJECT NO.:	405654

PUMP STATION

ELECTRICAL

LIGHTING PLAN (2 OF 4)

E-42-107

129 OF 159

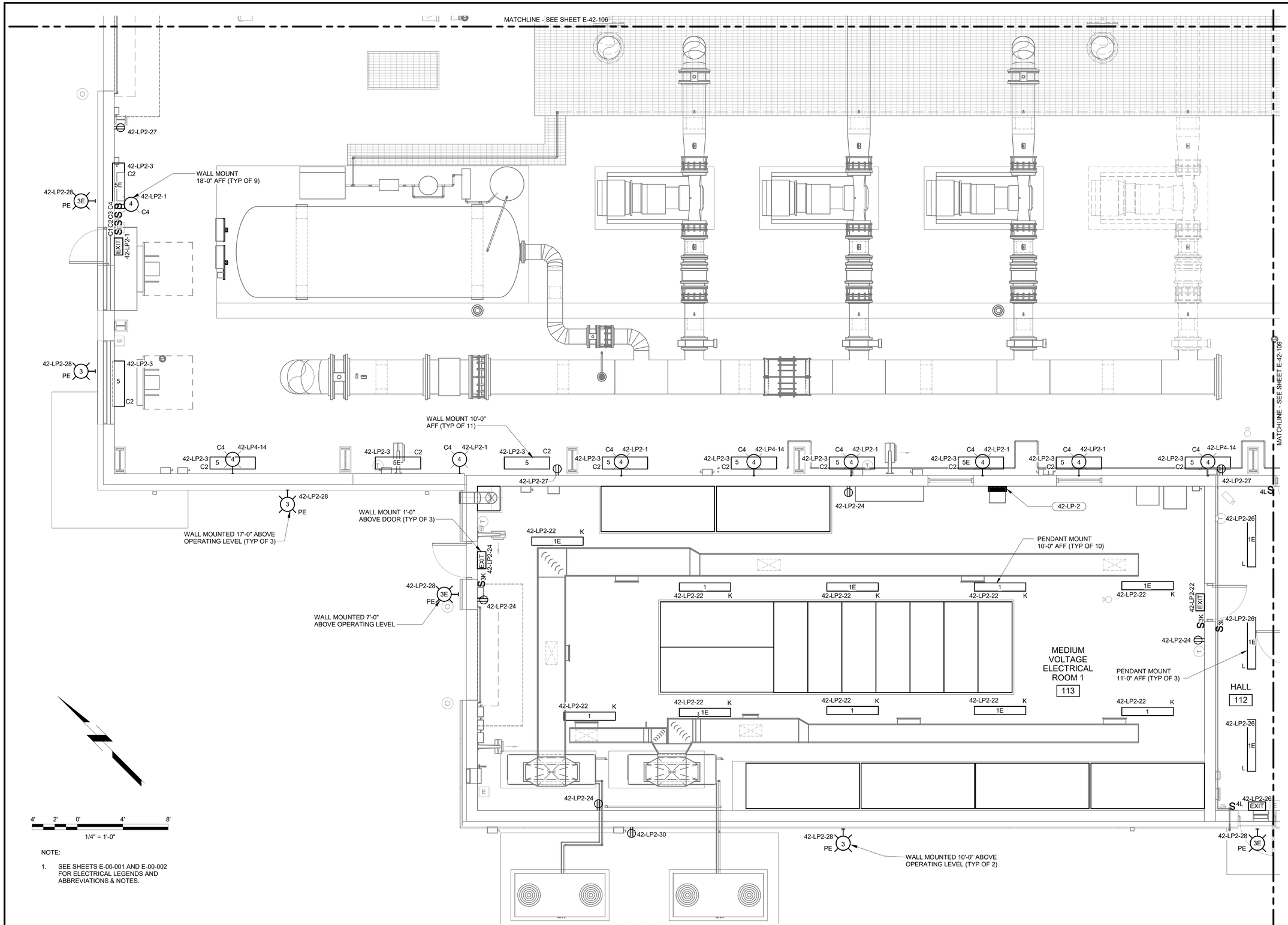

NOTE:

1. SEE SHEETS E-00-001 AND E-00-002 FOR ELECTRICAL LEGENDS AND ABBREVIATIONS & NOTES.

LIGHTING PLAN (3 OF 4)

1/4" = 1'-0"

(SCALE BAR IS 4" AT FULL SCALE) 0 1/2 1 2 3 4

PLOTTED: 1/20/2023 12:07:50 PM
FILE: BIM 360://405654 - BWD Western Corridor Pump Station/405654-42-PUMP STATION.rvt
D11000

BLACK & VEATCH

Black & Veatch Corporation
Kansas City, Missouri

olsson

THIS DOCUMENT WAS ORIGINALLY ISSUED AND SEALED ON JANUARY 24, 2023 BY KIRK H. IVY, A LICENSED PROFESSIONAL ENGINEER IN THE STATE OF ARKANSAS, E-16494

BEAVER WATER DISTRICT

WESTERN CORRIDOR PUMP STATION

100% SET

REVISIONS AND RECORD OF ISSUE

DESIGNED:	HNE
DETAILED:	RC
CHECKED:	WML
APPROVED:	KHI
DATE:	JANUARY 24, 2023
PROJECT NO.:	405654

PUMP STATION

ELECTRICAL

LIGHTING PLAN (3 OF 4)

E-42-108

130 OF 159

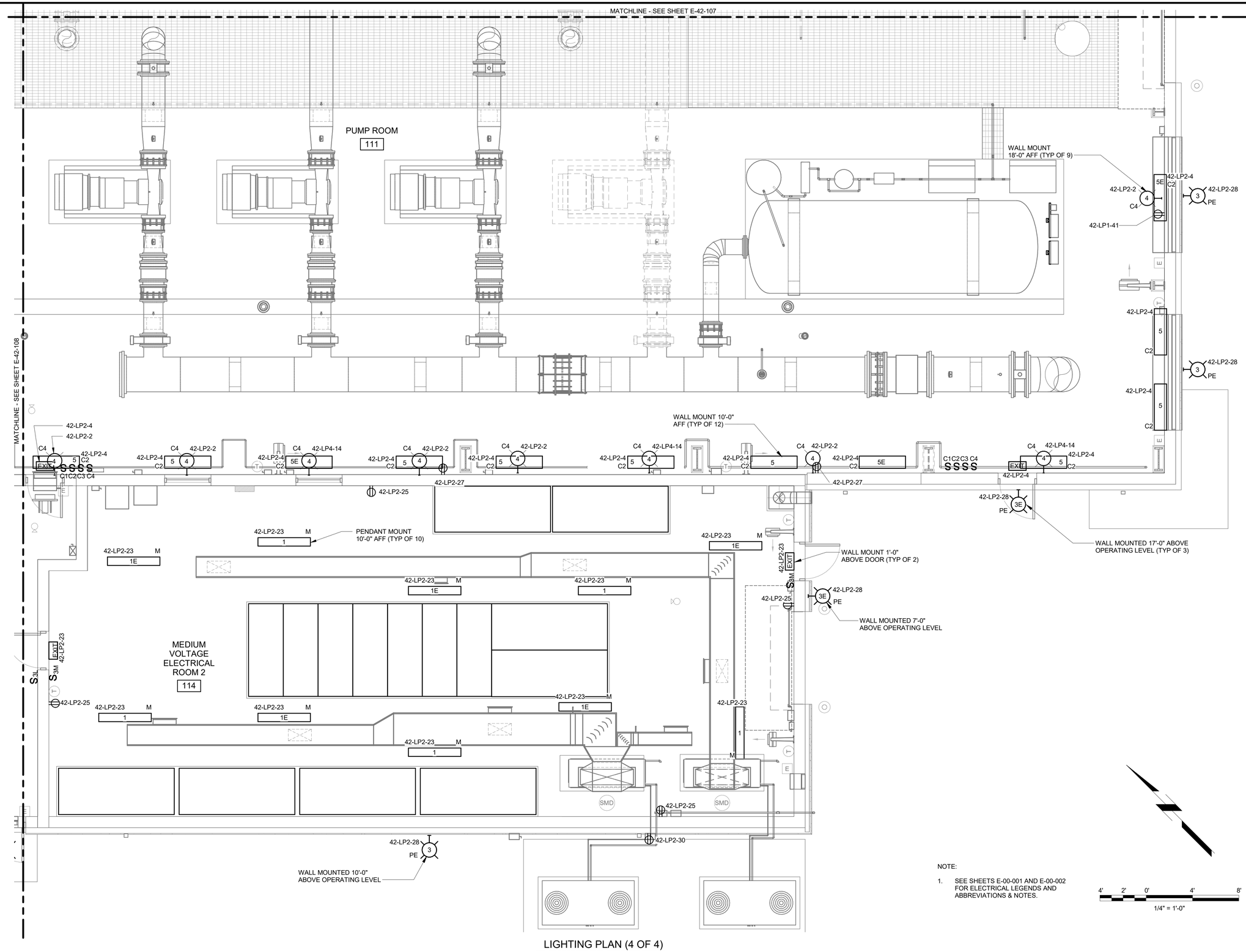

LIGHTING PLAN (4 OF 4)

1/4" = 1'-0"

NOTE:

1. SEE SHEETS E-00-001 AND E-00-002 FOR ELECTRICAL LEGENDS AND ABBREVIATIONS & NOTES.

4' 2' 0' 4' 8'

1/4" = 1'-0"

(SCALE BAR IS 4" AT FULL SCALE) 0 1/2 1 2 3 4

BLACK & VEATCH

Black & Veatch Corporation
Kansas City, Missouri

olsson

THIS DOCUMENT WAS ORIGINALLY ISSUED AND SEALED ON JANUARY 24, 2023 BY KIRK H. IVY, A LICENSED PROFESSIONAL ENGINEER IN THE STATE OF ARKANSAS, E-16494

BEAVER WATER DISTRICT

WESTERN CORRIDOR PUMP STATION

100% SET

REVISIONS AND RECORD OF ISSUE

DESIGNED:	HNE
DETAILED:	RC
CHECKED:	WML
APPROVED:	KHI
DATE:	JANUARY 24, 2023
PROJECT NO.:	405654

PUMP STATION

ELECTRICAL

LIGHTING PLAN (4 OF 4)

E-42-109

131 OF 159

PLOTTED: 1/20/2023 12:08:29 PM
FILE: BIM 360://405654 - BWD Western Corridor Pump Station/405654-42-PUMP STATION.rvt
D11000

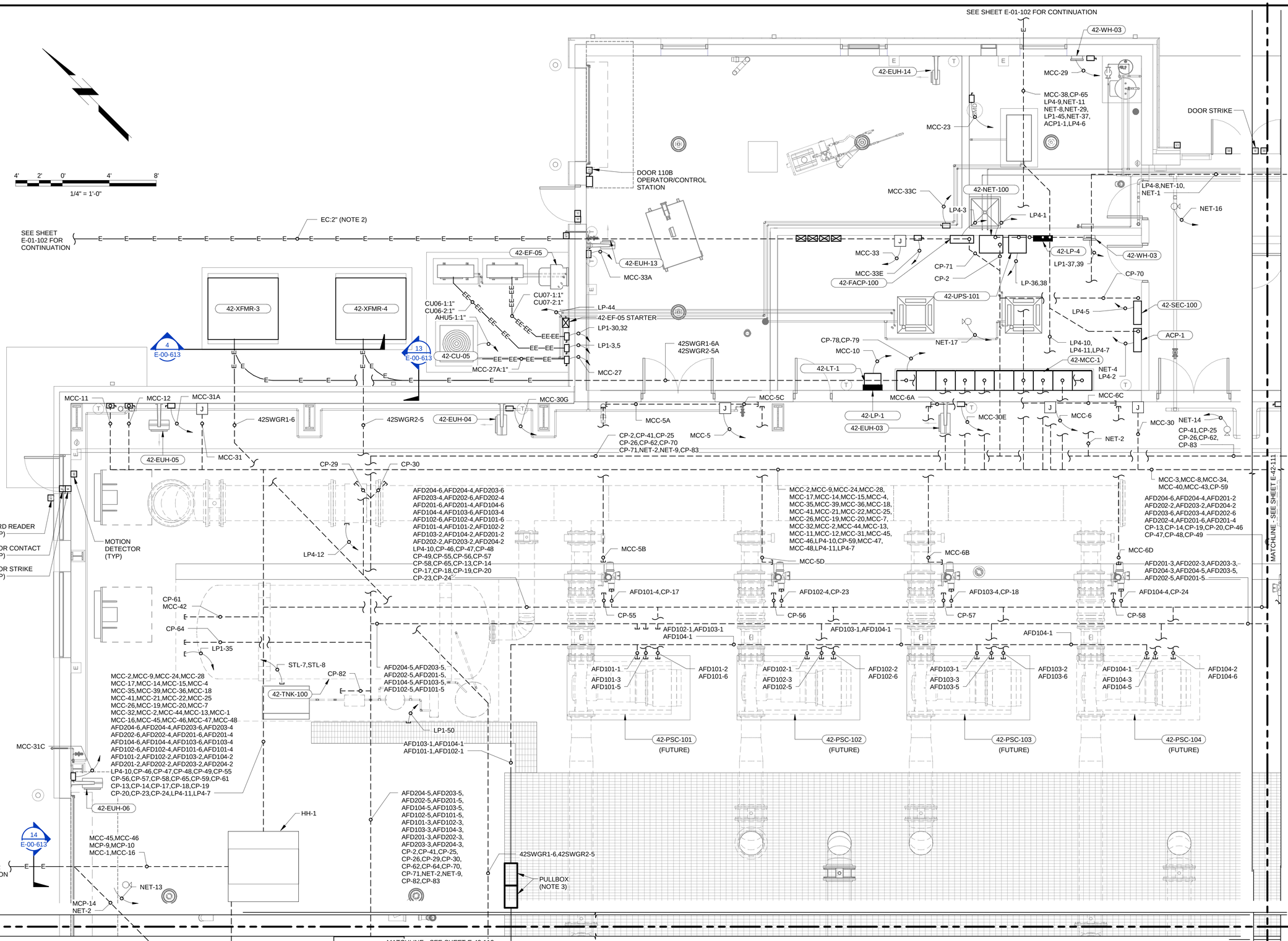

CONDUIT ROUTING PLAN (1 OF 4)

1/4" = 1'-0"

NOTES:
1. SEE SHEETS E-00-001 AND E-00-002 FOR ELECTRICAL LEGENDS AND ABBREVIATIONS & NOTES.
2. DEDICATED CONDUIT FOR FIRE ALARM SIGNALS TO ELECTRICAL BUILDING.
3. SEE DETAIL AA ON SHEET E-00-502 FOR PULLBOX AND CONDUIT LAYOUT.

(SCALE BAR IS 4" AT FULL SCALE) 0 1/2 1 2 3 4

PLOTTED: 1/20/2023 7:34:02 AM
FILE: BM 360://405654 - BWD Western Corridor Pump Station\405654-42-PUMP STATION.rvt
D11000

BLACK & VEATCH
Black & Veatch Corporation
Kansas City, Missouri

olsson

THIS DOCUMENT WAS ORIGINALLY ISSUED AND SEALED ON JANUARY 24, 2023 BY KIRK H. IVY, A LICENSED PROFESSIONAL ENGINEER IN THE STATE OF ARKANSAS, E-16494

BEAVER WATER DISTRICT

WESTERN CORRIDOR PUMP STATION

100% SET

REVISIONS AND RECORD OF ISSUE

DESIGNED:	HNE
DETAILED:	RC
CHECKED:	WML
APPROVED:	KHI
DATE:	JANUARY 24, 2023
PROJECT NO.:	405654

PUMP STATION

ELECTRICAL

CONDUIT ROUTING PLAN (1 OF 4)

E-42-110

132 OF 159

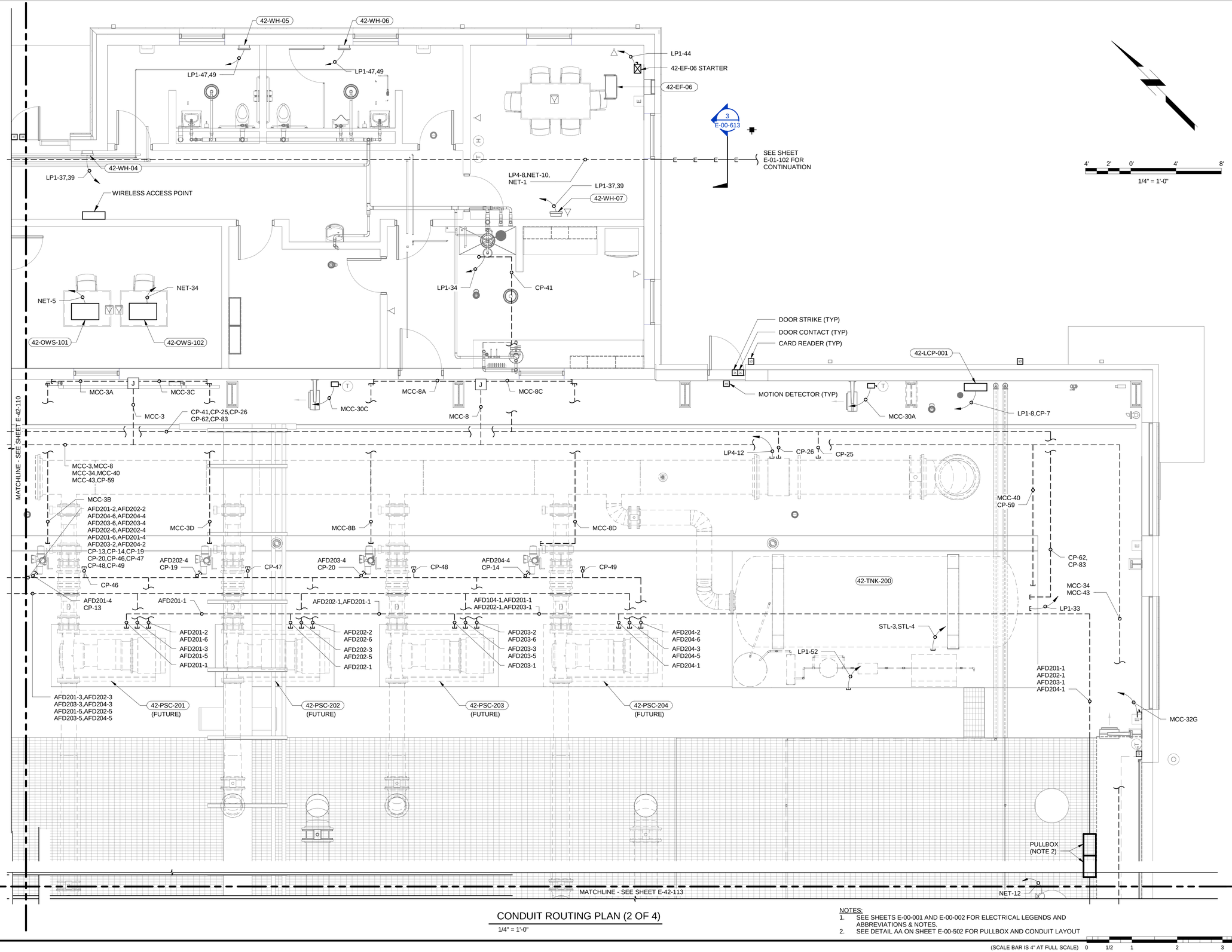

CONDUIT ROUTING PLAN (2 OF 4)

1/4" = 1'-0"

NOTES:
1. SEE SHEETS E-00-001 AND E-00-002 FOR ELECTRICAL LEGENDS AND ABBREVIATIONS & NOTES.
2. SEE DETAIL AA ON SHEET E-00-502 FOR PULLBOX AND CONDUIT LAYOUT

(SCALE BAR IS 4" AT FULL SCALE) 0 1/2 1 2 3 4

PLOTTED: 1/20/2023 7:34:12 AM
FILE: BIM 360://405654 - BWD Western Corridor Pump Station/405654-42-PUMP STATION.rvt
D11000

BLACK & VEATCH
Black & Veatch Corporation
Kansas City, Missouri

olsson

THIS DOCUMENT WAS ORIGINALLY ISSUED AND SEALED ON JANUARY 24, 2023 BY KIRK H. IVY, A LICENSED PROFESSIONAL ENGINEER IN THE STATE OF ARKANSAS, E-16494

BEAVER WATER DISTRICT

WESTERN CORRIDOR PUMP STATION

100% SET

REVISIONS AND RECORD OF ISSUE

DESIGNED:	HNE
DETAILED:	RC
CHECKED:	WML
APPROVED:	KHI
DATE:	JANUARY 24, 2023
PROJECT NO.:	405654

PUMP STATION

ELECTRICAL

CONDUIT ROUTING PLAN (2 OF 4)

E-42-111

133 OF 159

MATCHLINE - SEE SHEET E-42-110

MCC-2,MCC-9,MCC-24,MCC-28,MCC-17,MCC-14,MCC-15
MCC-4,MCC-35,MCC-39,MCC-36,MCC-18,MCC-41,MCC-21,
MCC-22,MCC-25,MCC-26,MCC-19,MCC-20,MCC-7,MCC-32
MCC-2,MCC-44,MCC-13,MCC-47,MCC-48
AFD204-6,AFD204-4,AFD203-6,AFD203-4,AFD202-6,AFD202-4
AFD201-6,AFD201-4,AFD104-6,AFD104-4,AFD103-6,AFD103-4
AFD102-6,AFD102-4,AFD101-6,AFD101-4,AFD101-2,AFD102-2
AFD103-2,AFD104-2,AFD201-2,AFD202-2,AFD203-2,AFD204-2
CP-13,CP-14,CP-17,CP-18,CP-19,CP-20,CP-23,CP-24,CP-46,
CP-47,CP-48,CP-49,CP-55,CP-56CP-57,CP-58,CP-65,CP-59,CP-61
42SWGR1-1A,42SWGR1-1B,42SWGR1-2A,42SWGR1-2B,42SWGR2-1A
42SWGR2-1B,LP4-10,LP4-11,LP4-7

42SWGR1-6,42SWGR2-5

HH-2

MCP-14
NET-2

MCC-36

42- PIT-402

CP-80

LP2-8

MCC-18

CARD READER (TYP)

DOOR CONTACT (TYP)

MCC-41
CP-60

DOOR STRIKE (TYP)

MOTION DETECTOR (TYP)

CP-63

LP2-14

42- LIT-400

42- PIT-400

STL-5,STL-6

AFD101-3,AFD102-3
AFD103-3,AFD104-3
AFD201-3,AFD202-3
AFD203-3,AFD204-3
AFD204-5,AFD203-5
AFD202-5,AFD201-5
AFD104-5,AFD103-5
AFD102-5,AFD101-5
CP-62,CP-64,CP-71
CP-70,CP-2,CP-41
CP-25,CP-26,CP-29,CP-30
42SWGR1-1C,
42SWGR2-1C,NET-9

AFD101-1,AFD102-1
AFD103-1,AFD104-1

AFD401-1
AFD401-3
AFD401-5
AFD401-2
AFD401-6
AFD401-7
AFD102-1
AFD204-1

42-PSC-401

AFD102-1,AFD401-1
AFD204-1

AFD402-1
AFD402-3
AFD402-5
AFD402-2
AFD402-6
AFD402-7

42-PSC-402

AFD304-1,AFD102-1
AFD402-1,AFD401-1
AFD403-1,AFD204-1

AFD403-1
AFD403-3
AFD403-5
AFD403-2
AFD403-6
AFD403-7

42-PSC-403

AFD304-1,AFD102-1
AFD204-1,AFD402-1
AFD201-1

AFD404-1
AFD404-5
AFD404-3
AFD404-2
AFD404-6
AFD404-7

42-PSC-404

AFD301-2,AFD302-2,AFD303-2
AFD304-2,AFD304-6,AFD304-7
AFD304-4,AFD301-6,AFD301-7
AFD301-4,AFD404-6,AFD404-7
AFD404-4,AFD402-6,AFD402-7
AFD402-4,AFD202-6,AFD202-7
AFD202-4,AFD203-6,AFD203-7
AFD203-4,AFD104-6,AFD104-7
AFD104-4,AFD102-6,AFD102-7
AFD102-4
CP-9,CP-10,CP-11,CP12

AFD304-1,AFD102-1
AFD201-1,AFD402-1
AFD301-1,AFD404-1
AFD204-1

AFD304-5,AFD301-5
AFD202-5,AFD203-5
AFD104-5,AFD102-5
AFD402-5,AFD404-5
AFD301-3,AFD302-3
AFD303-3,AFD304-3

CP-51

AFD401-4
CP-15

CP-52

AFD402-4
CP-21

CP-53

AFD403-4
CP-16

CP-54

AFD404-4
CP-22

AFD103-1
AFD204-1
AFD101-1

42- PIT-401

42-FIT/FE-401

CP-27

NET-9

CP-28

MCC-4B

AFD403-5

AFD403-4
AFD403-6

AFD204-4
AFD204-6

AFD304-4,
AFD304-6,
AFD304-7

AFD103-5

AFD103-4
AFD103-6
AFD103-7

AFD403-1
AFD304-1

AFD204-5

AFD101-4
AFD101-6
AFD101-7

AFD304-5

AFD201-1

MCC-4D

AFD201-4
AFD201-6
AFD201-7

MCC-7B

AFD401-1

AFD401-4
AFD401-6
AFD401-7

AFD301-1

AFD301-4,
AFD301-6,
AFD301-7

MCC-7D

AFD301-5

NET-15

AFD101-5

AFD201-5

AFD401-5

MCC-14,MCC-15

MCC-15

42-EUH-07

MCC-31E

MCC-39

MCC-4A
MCC-4

MCC-31G

42-EUH-08

MCC-17

MCC-7

MCC-47

MCC-7C

MCC-4C

MCC-7A

MCC-39A

42-LCP-102

AFD403-1

AFD103-5

AFD103-1

AFD103-4
AFD103-6
AFD103-7

42-AFD-403

42-AFD-103

42-CP-100

42-LT-2

42-LP-2

CP-67

BAT-2A
BAT-3C
MTS-1

42-MTS-2

AFD204-1
AFD101-1
AFD201-1

42-EUH-15

CP-75

42SWGR1-4
PP-11

42SWGR1-3
PP-15

AFD103-2,AFD103-3

AFD404-2
AFD403-3

AFD201-1

AFD201-5

AFD401-5

LP4-7

AFD401-1

AFD201-4
AFD201-6
AFD201-7

AFD401-4
AFD401-6
AFD401-7

AFD301-4,
AFD301-6,
AFD301-7

AFD301-5

NET-19

MCC-21:1"
MCC-22:1"
MCC-25:1"
MCC-26:1"

AFD304-2,AFD304-3

AFD304-1

AFD204-4
AFD204-6
AFD204-7

PP-4

(FRONT)

42SWGR2-1C
42SWGR2-1C

42SWGR1-10

AFD304-4
AFD304-6
AFD304-7

AFD304-5

AFD204-5

42-AFD-304

42-AFD-204

AFD204-1

42-SWGR-1

42SWGR2-1B

42SWGR1-1

MTS-1

AFD301-1

MCC-35

42SWGR1-6
42SWGR2-5

43SWGR1-4
42SWGR2-6
43SWGR1-5

SEE SHEET
E-01-102 FOR
CONTINUATION

2
E-00-613

42SWGR1-5

AFD101-4
AFD101-6
AFD101-7

AFD101-5

42SWGR1-1A
42SWGR1-1B
42SWGR1-2A
42SWGR1-2B
42SWGR2-1A
42SWGR2-1B

PP-8

AFD204-2,AFD204-3

43SWGR1-5
42SWGR2-5
42SWGR2-6

MCC-19

MCC-20

MCC-39C

42-EUH-16

42SWGR1-6,42SWGR2-5
43SWGR1-4,42SWGR2-6,43SWGR1-5

AFD101-2,AFD101-3

PP-13

42SWGR1-9

AFD201-2,AFD201-3

42SWGR1-8
PP-5

AFD401-2,AFD401-3

42SWGR1-7
PP-9

AFD301-2,AFD301-3

42SWGR1-2
PP-1

MCC-39E

AFD201-1
AFD101-1

AFD201-1
AFD101-1
AFD101-4
AFD101-6
AFD101-7
AFD101-5
AFD201-1

AFD201-4
AFD201-6
AFD201-7

AFD201-5

AFD401-1
AFD401-4
AFD401-6
AFD401-7

AFD401-5

AFD301-1
AFD301-4
AFD301-6
AFD301-7

AFD301-5

42-AFD-101

42-AFD-201

42-AFD-401

42-AFD-301

MCC-25:1",MCC-26:1"

NET-9:2"
LP4-7:2"

AHU1-1:1"

AHU2-1:1"

MCC-22A:1"

MCC-21A:1"

SEE SHEET
E-01-102 FOR
CONTINUATION

MATCHLINE - SEE SHEET E-42-113

4' 2' 0' 4' 8'

1/4" = 1'-0"

CONDUIT ROUTING PLAN (3 OF 4)

1/4" = 1'-0"

NOTES:
1. SEE SHEETS E-00-001 AND E-00-002 FOR ELECTRICAL LEGENDS AND ABBREVIATIONS & NOTES.
2. ALL CONDUITS WITHIN THE MV ELECTRICAL ROOM SHALL BE ROUTED WITHIN OR BELOW THE SLAB.

(SCALE BAR IS 4" AT FULL SCALE) 0 1/2 1 2 3 4

PLOTTED: 1/20/2023 7:34:20 AM
FILE: BIM 360://405654 - BWD Western Corridor Pump Station/405654-42-PUMP STATION.rvt
D11000

BLACK & VEATCH
Black & Veatch Corporation
Kansas City, Missouri

olsson

THIS DOCUMENT WAS ORIGINALLY ISSUED AND SEALED ON JANUARY 24, 2023 BY KIRK H. IVY, A LICENSED PROFESSIONAL ENGINEER IN THE STATE OF ARKANSAS, E-16494

BEAVER WATER DISTRICT

WESTERN CORRIDOR PUMP STATION

100% SET

REVISIONS AND RECORD OF ISSUE

DESIGNED:	HNE
DETAILED:	RC
CHECKED:	WML
APPROVED:	KHI
DATE:	JANUARY 24, 2023
PROJECT NO.:	405654

PUMP STATION

ELECTRICAL

CONDUIT ROUTING PLAN (3 OF 4)

E-42-112

134 OF 159

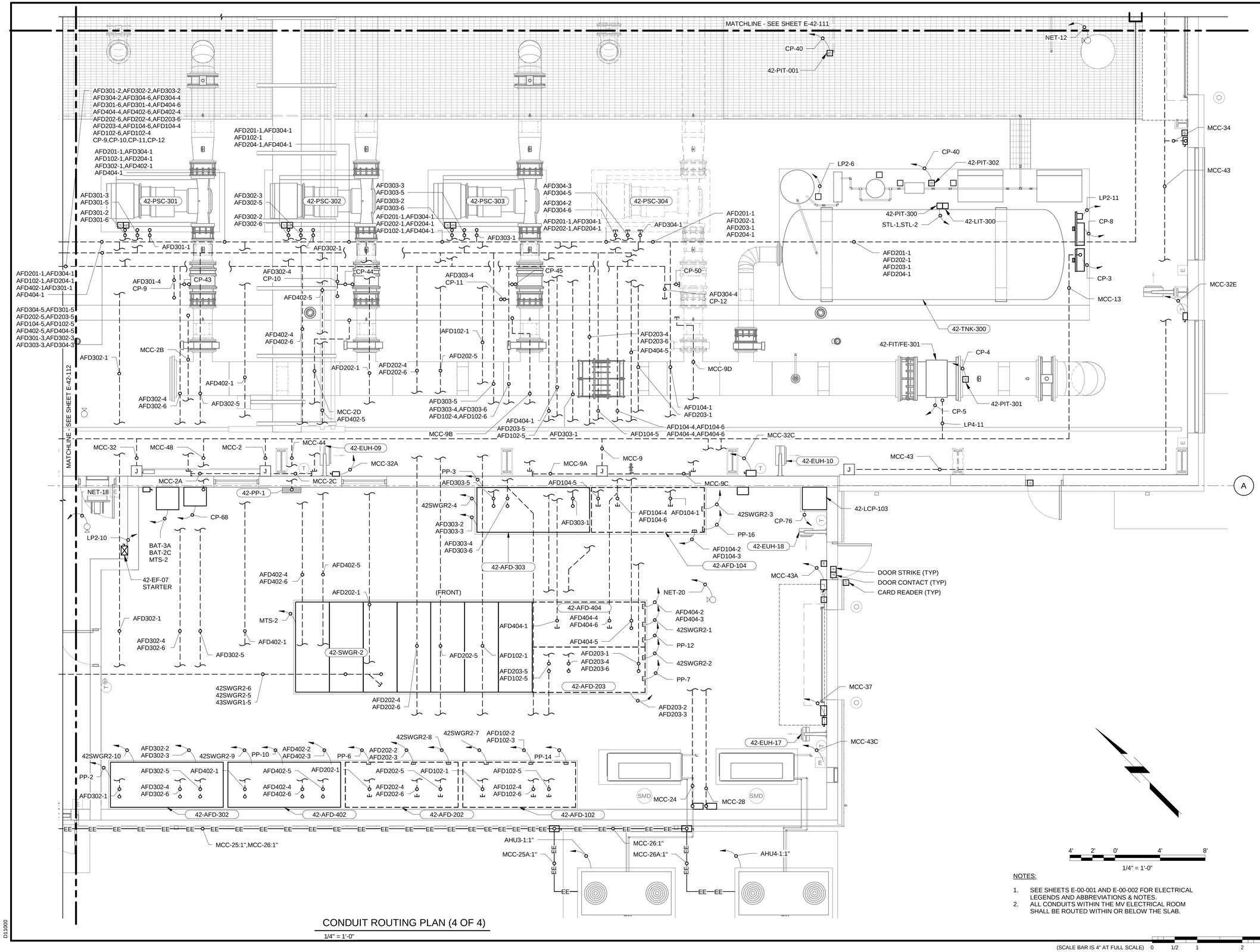

CONDUIT ROUTING PLAN (4 OF 4)

1/4" = 1'-0"

(SCALE BAR IS 4" AT FULL SCALE) 0 1/2 1 2 3 4

PLOTTED: 1/20/2023 7:34:27 AM
FILE: BIM 360://405654 - BWD Western Corridor Pump Station/405654-42-PUMP STATION.rvt
D11000

BLACK & VEATCH
Black & Veatch Corporation
Kansas City, Missouri

olsson

THIS DOCUMENT WAS ORIGINALLY ISSUED AND SEALED ON JANUARY 24, 2023 BY KIRK H. IVY, A LICENSED PROFESSIONAL ENGINEER IN THE STATE OF ARKANSAS, E-16494

BEAVER WATER DISTRICT

WESTERN CORRIDOR PUMP STATION

100% SET

REVISIONS AND RECORD OF ISSUE

DESIGNED:	HNE
DETAILED:	RC
CHECKED:	WML
APPROVED:	KHI
DATE:	JANUARY 24, 2023
PROJECT NO.:	405654

PUMP STATION

ELECTRICAL

CONDUIT ROUTING PLAN (4 OF 4)

E-42-113

135 OF 159

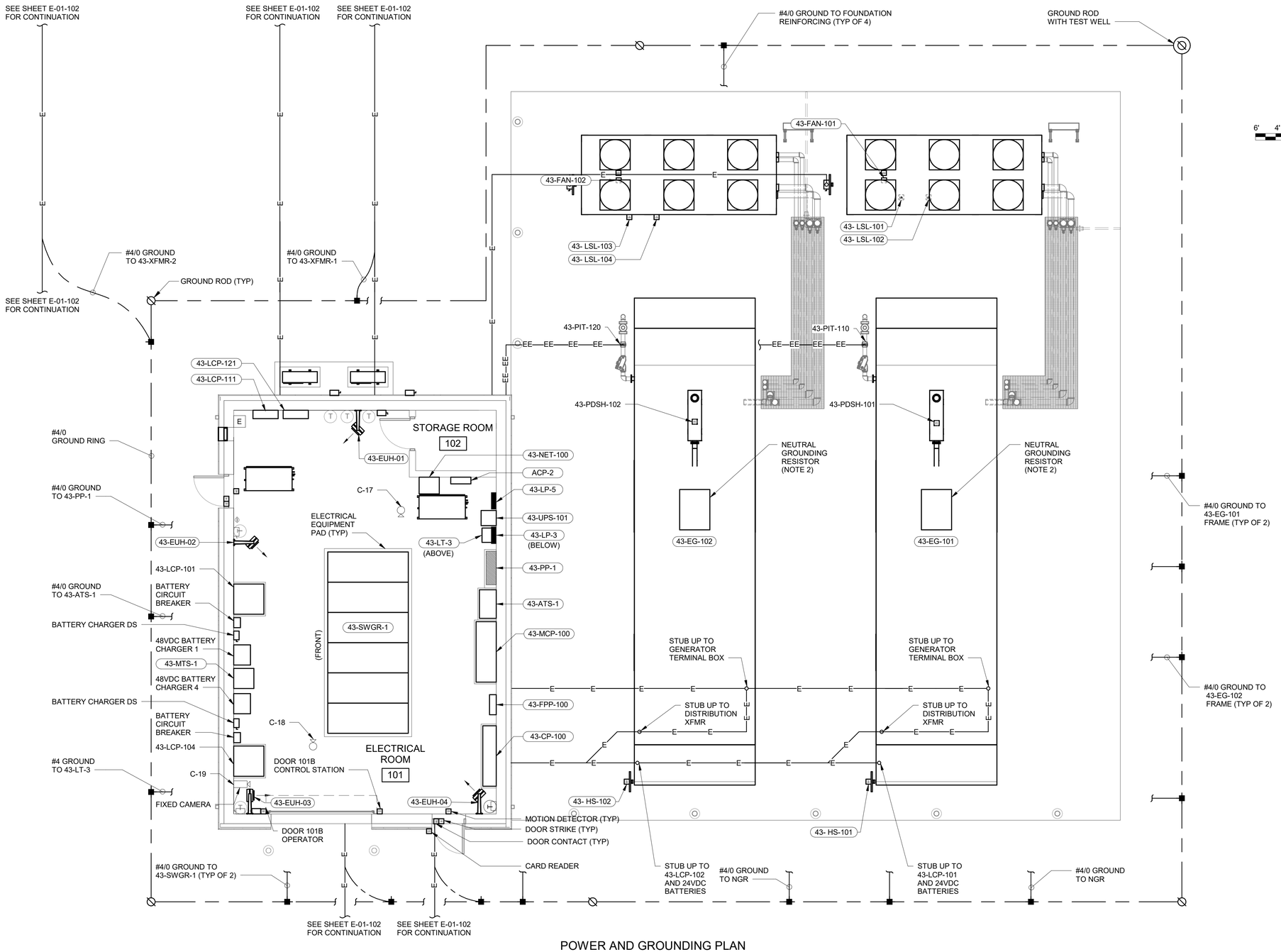

POWER AND GROUNDING PLAN

3/16" = 1'-0"

NOTES:

1. SEE SHEETS E-00-001 AND E-00-002 FOR ELECTRICAL LEGENDS AND ABBREVIATIONS & NOTES.
2. NGR SHALL BE MOUNTED ON THE ROOF OF THE GENERATOR ENLCLOSURE. ENCLOSURE MANUFACTURER SHALL INCLUDE PROVISIONS TO SUPPORT THE NGR BASED ON SIZE, WEIGHT AND SEISMIC REQUIREMENTS.

6' 4' 2' 0' 5' 10'

3/16" = 1'-0"

(SCALE BAR IS 4" AT FULL SCALE) 0 1/2 1 2 3 4

BLACK & VEATCH

Black & Veatch Corporation
Kansas City, Missouri

olsson

THIS DOCUMENT WAS ORIGINALLY ISSUED AND SEALED ON JANUARY 24, 2023 BY KIRK H. IVY, A LICENSED PROFESSIONAL ENGINEER IN THE STATE OF ARKANSAS, E-16494

BEAVER WATER DISTRICT

WESTERN CORRIDOR PUMP STATION

100% SET

REVISIONS AND RECORD OF ISSUE

DESIGNED:	HNE
DETAILED:	RC
CHECKED:	WML
APPROVED:	KHI
DATE:	JANUARY 24, 2023
PROJECT NO.:	405654

ELECTRICAL BUILDING

ELECTRICAL

POWER AND GROUNDING PLAN

E-43-101

136 OF 159

PLOTTED: 1/23/2023 10:03:24 AM
FILE: BIM 360://405654 - BWD Western Corridor Pump Station/405654-43-ELECTRICAL BUILDING.rvt
D11000

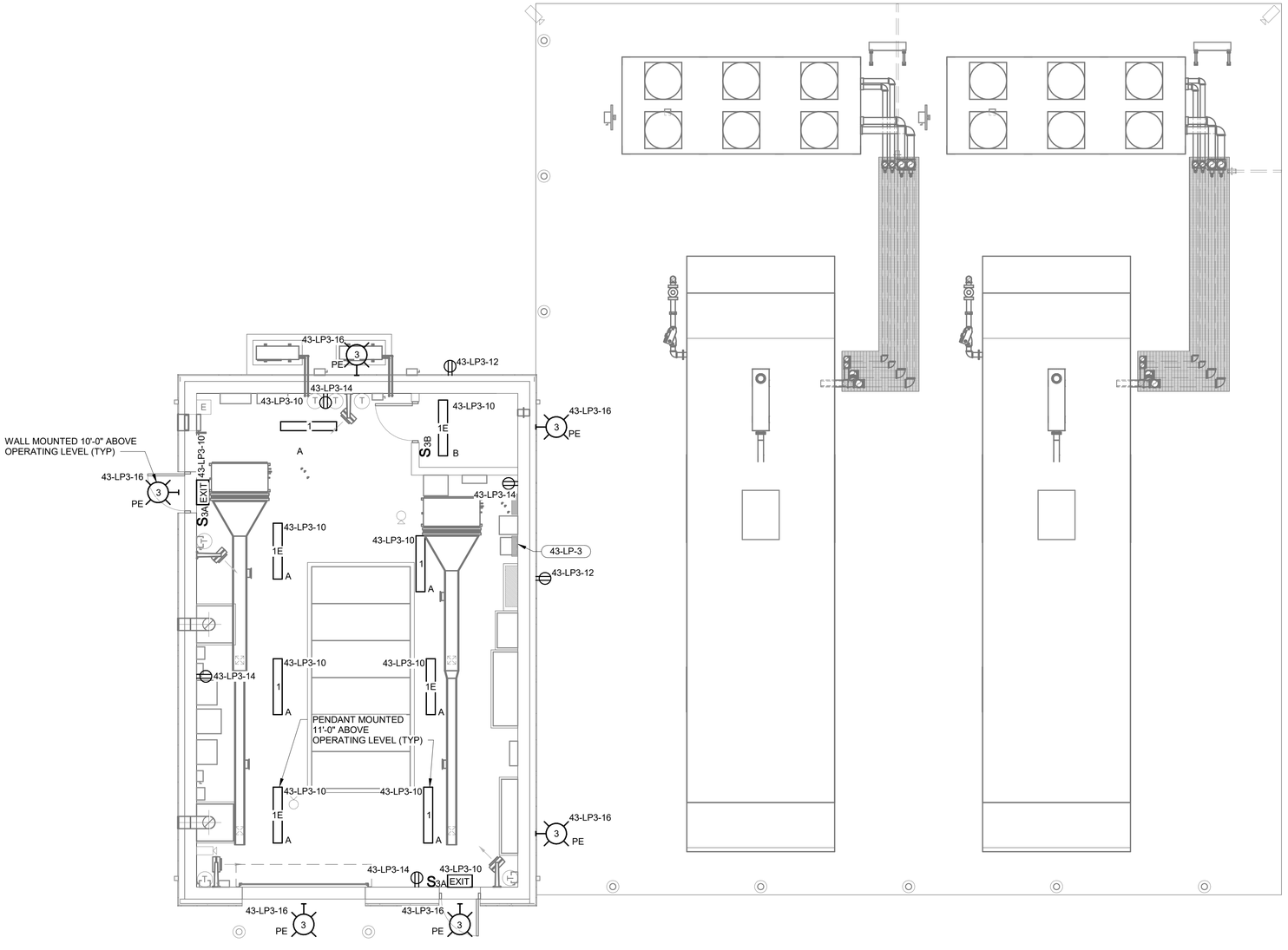

LIGHTING PLAN

3/16" = 1'-0"

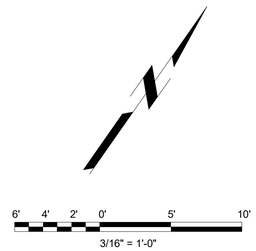

NOTE:.

1. SEE SHEETS E-00-001 AND E-00-002 FOR ELECTRICAL LEGENDS AND ABBREVIATIONS & NOTES.

(SCALE BAR IS 4" AT FULL SCALE) 0 1/2 1 2 3 4

PLOTTED: 1/23/2023 10:03:25 AM
FILE: BIM 360://405654 - BWD Western Corridor Pump Station/405654-43-ELECTRICAL BUILDING.rvt
D11000

BLACK & VEATCH

Black & Veatch Corporation
Kansas City, Missouri

olsson

THIS DOCUMENT WAS ORIGINALLY ISSUED AND SEALED ON JANUARY 24, 2023 BY KIRK H. IVY, A LICENSED PROFESSIONAL ENGINEER IN THE STATE OF ARKANSAS, E-16494

BEAVER WATER DISTRICT

WESTERN CORRIDOR PUMP STATION

100% SET

REVISIONS AND RECORD OF ISSUE

DESIGNED:	HNE
DETAILED:	RC
CHECKED:	WML
APPROVED:	KHI
DATE:	JANUARY 24, 2023
PROJECT NO.:	405654

ELECTRICAL BUILDING

ELECTRICAL

LIGHTING & RECEPTACLE PLAN

E-43-102

137 OF 159

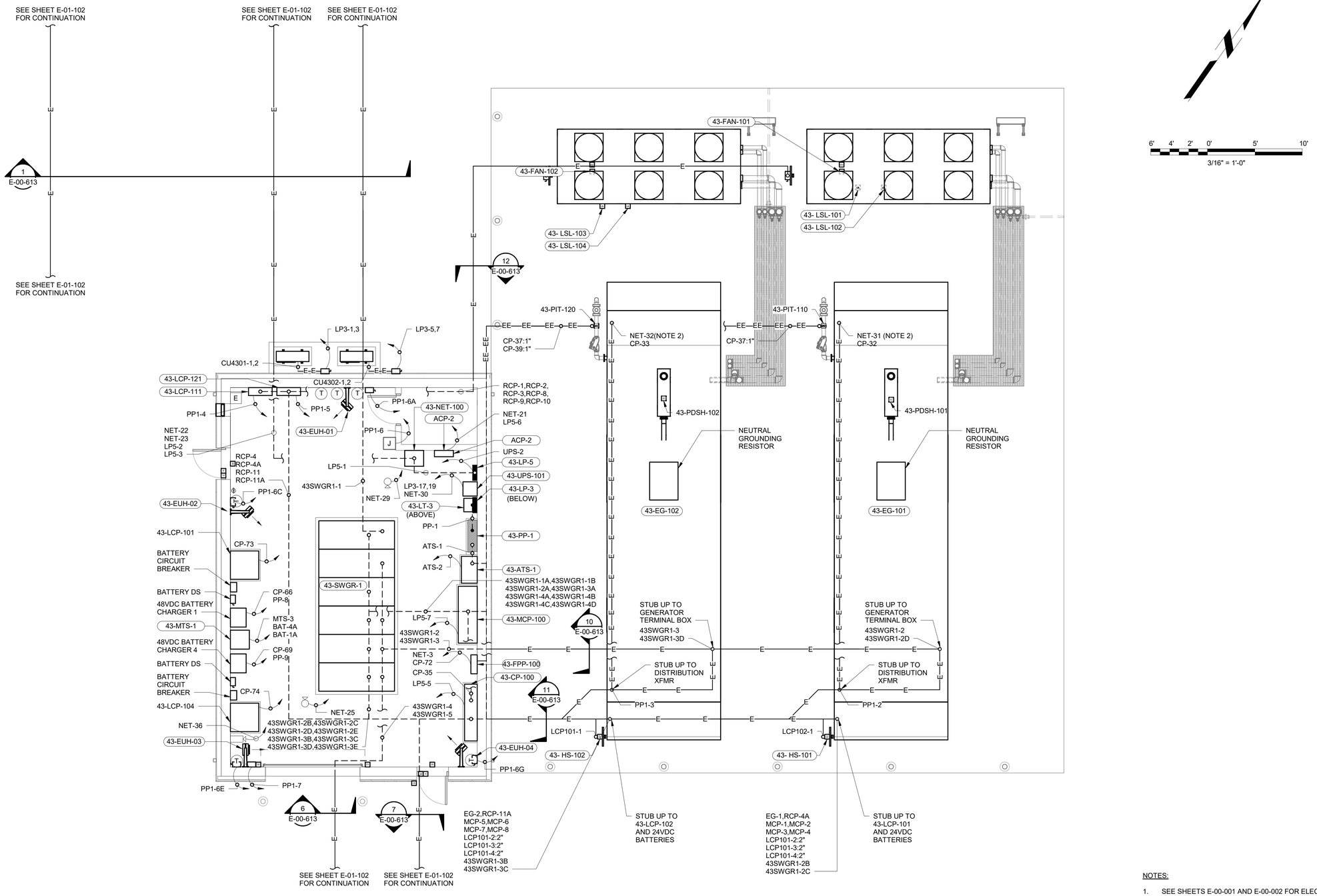

CONDUIT ROUTING PLAN

3/16" = 1'-0"

6' 4' 2' 0' 5' 10'

3/16" = 1'-0"

NOTES:

1. SEE SHEETS E-00-001 AND E-00-002 FOR ELECTRICAL LEGENDS AND ABBREVIATIONS & NOTES.
2. CONDUITS FOR CIRCUIT NET-31 AND NET-32 SHALL STUB OUT AND BE CAPPED WITHIN RESPECTIVE GENERATOR ENCLOSURE.

(SCALE BAR IS 4" AT FULL SCALE) 0 1/2 1 2 3 4

BLACK & VEATCH

Black & Veatch Corporation
Kansas City, Missouri

olsson

THIS DOCUMENT WAS ORIGINALLY ISSUED AND SEALED ON JANUARY 24, 2023 BY KIRK H. IVY, A LICENSED PROFESSIONAL ENGINEER IN THE STATE OF ARKANSAS, E-16494

BEAVER WATER DISTRICT

WESTERN CORRIDOR PUMP STATION

100% SET

REVISIONS AND RECORD OF ISSUE

DESIGNED:	HNE
DETAILED:	RC
CHECKED:	WML
APPROVED:	KHI
DATE:	JANUARY 24, 2023
PROJECT NO.:	405654

ELECTRICAL BUILDING

ELECTRICAL

CONDUIT ROUTING PLAN

E-43-103

138 OF 159

PLOTTED: 1/23/2023 10:03:27 AM
FILE: BIM 360://405654 - BWD Western Corridor Pump Station/405654-43-ELECTRICAL BUILDING.rvt
D11000

EQUIPMENT IDENTIFICATION DESCRIPTION

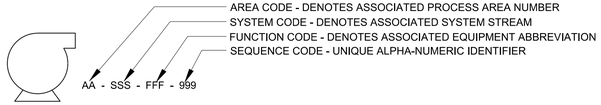

PIPELINE IDENTIFICATION DESCRIPTION

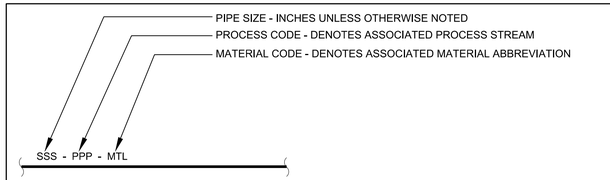

LINE SYMBOLS

- MAJOR PROCESS PIPING OR FLOW CHANNEL
- SECONDARY PROCESS PIPING
- MISCELLANEOUS PIPING
- SCREENED LINE DENOTES EXISTING PIPE OR EQUIPMENT
- DASHED LINE DENOTES FUTURE PIPE AND EQUIPMENT
- ELECTRIC SIGNAL
- HYDRAULIC SIGNAL
- PNEUMATIC SIGNAL
- SIGNAL CONNECTION POINT
- CONTROL SYSTEM BACKBONE NETWORK SIGNAL (ETHERNET)
- FIELD DEVICE NETWORK SIGNAL (ETHERNET)
- NON-STANDARD OR INDEPENDENT CONTROL SYSTEM NETWORK SIGNAL (AS NOTED ON DRAWINGS)

- X | I-XX-XXX — SIGNAL LINE GOING TO ANOTHER SHEET
- X | I-XX-XXX — SIGNAL LINE FROM ANOTHER SHEET (MATCH LETTERS)
- X | I-XX-XXX — PROCESS LINE COMING/GOING TO/FROM ANOTHER SHEET
- MATCH SHEET NO. IDENTIFIER / MATCH LINE NO.
- X — SIGNAL CONNECTION WITHIN THE SAME SHEET
- FLOW ARROW FOR PROCESS PIPING
- PROCESS LINES CROSSING (NOT CONNECTED)

PRIMARY ELEMENT & FITTING SYMBOLS

- DIAPHRAGM SEAL
- PRIMARY FLOW ELEMENT: ORIFICE PLATE
- PRIMARY FLOW ELEMENT: FLUME
- PRIMARY FLOW ELEMENT: TURBINE OR PROPELLER-TYPE
- M — PRIMARY FLOW ELEMENT: ELECTROMAGNETIC
- ΔT — THERMAL DISPERSION OR THERMAL MASS TYPE FLOW ELEMENT
- PRIMARY FLOW ELEMENT: TRANSIT-TIME ULTRASONIC
- FLOW CONDITIONER
- LE / CON — CONDUCTANCE TYPE LEVEL SENSOR
- LE / RAD — RADAR TYPE LEVEL SENSOR
- LE / GWR — GUIDED WAVE RADAR TYPE LEVEL SENSOR
- ANNULAR TYPE DIAPHRAGM SEAL
- PRIMARY FLOW ELEMENT: POSITIVE DISPLACEMENT
- PRIMARY FLOW ELEMENT: VENTURI TUBE, FLOW NOZZLE, OR FLOW TUBE. * SEE MEASUREMENT SYMBOL NOTATIONS LIST
- PRIMARY FLOW ELEMENT: WEIR
- PRIMARY FLOW ELEMENT: PITOT TUBE
- PRIMARY FLOW ELEMENT: CORIOLIS
- HORN OR SIREN
- FG — ROTAMETER
- LE / US — ULTRASONIC TYPE LEVEL SENSOR
- LE / DP — PRESSURE SENSING LEVEL SENSOR
- PILOT LIGHT
- REDUCER - CONCENTRIC
- REDUCER - ECCENTRIC
- FLANGE
- D — DRAIN - BELL-UP
- D — DRAIN - FUNNEL
- FLEXIBLE CONNECTION
- CAP
- PLUG
- T — TRAP
- FLAME CHECK
- SURGE CHAMBER
- FLAME ARRESTER
- SEDIMENT TRAP
- P — INSTRUMENT PURGE OR FLUSHING DEVICE
- UNION
- HOSE CONNECTION
- STRAINER - Y TYPE
- STRAINER - BASKET
- Q — QUICK CONNECT
- VENT
- VENT - SCREENED
- COUPLING
- LG — SIGHTGLASS
- MOISTURE SEPARATOR
- EXPANSION LOOP
- SUCTION DIFFUSER

CHEMICAL FEED EQUIPMENT SYMBOLS

- DIFFUSER: TANK
- DIFFUSER: CHANNEL
- INJECTOR
- RUPTURE DISK
- PULSATION DAMPNER
- CHLORINE CYLINDER
- VAPOR SUPERHEATER
- PRESSURE BUILDING COIL
- SPECTACLE, BLIND, CLOSED
- SPECTACLE, BLIND, OPEN
- CALIBRATION COLUMN
- EXPANSION TANK OR FUNNEL
- WEIGH SCALE
- DRIP LEG HEATER
- TOTE
- AS — AUTOMATIC SWITCHOVER
- PASTE TYPE LIME SLAKER
- EDUCTOR
- GAS FEEDER
- EVAPORATOR
- DRY CHEMICAL FEEDER
- TON CONTAINER
- POLYMER BLENDER FEEDER
- POLYMER BLENDER FEEDER
- POLYMER INJECTION RING
- DIFFUSER
- DIFFUSER - PLAN
- CO2 VAPORIZER
- COMBINATION SHOWER/ EYEWASH FOUNTAIN
- EYEWASH FOUNTAIN
- SHOWER

MECHANICAL EQUIPMENT SYMBOLS

- VAPORIZER: AMBIENT
- PARTICULATE FILTER
- ROTARY SCROLL COMPRESSOR
- AIR FILTER
- WATER FILTER: CARTRIDGE TYPE
- WATER FILTER: MEMBRANE TYPE
- MIXER
- COMPRESSOR
- VALVE: MATERIAL HANDLING ROTARY
- AIR REGULATOR
- STATIC MIXER
- HEAT EXCHANGER: TYPE 1
- HEAT EXCHANGER: TYPE 2
- HEAT EXCHANGER: FINNED TUBE
- HEAT EXCHANGER: SHELL & TUBE
- HEAT EXCHANGER: PLATE & FRAME
- HEAT EXCHANGER: SPIRAL
- HEAT EXCHANGER: DOUBLE PIPE
- HEAT EXCHANGER: AIR
- BOILER
- AFTERCOOLER
- FILTER SEPARATOR
- S — SILENCER
- HYDROCYCLONE

PUMP & BLOWER SYMBOLS

- CENTRIFUGAL PUMP OR OTHER TYPE NOT SPECIFIED
- SUBMERGED CENTRIFUGAL PUMP
- SCREW (LIFT) PUMP
- ROTARY PUMP
- PROGRESSING CAVITY PUMP
- POSITIVE DISPLACEMENT PUMP
- PLUNGER PUMP
- VERTICAL PUMP
- SUMP PUMP
- CENTRIFUGAL FAN
- CENTRIFUGAL BLOWER
- POSITIVE DISPLACEMENT BLOWER
- COMPRESSOR: RECIPROCATING
- COMPRESSOR: ROTARY SCREW
- COMPRESSOR: LIQUID RING
- MOTOR DRIVEN DIAPHRAGM METERING PUMP
- S — SOLENOID PUMP
- PERISTALTIC PUMP
- DRUM PUMP
- DOUBLE DIAPHRAGM PUMP
- ELECTRIC MOTOR

VALVE & GATE SYMBOLS

- GATE: SLUICE OR SLIDE
- VALVE: GATE OR OTHER TWO-WAY TYPE NOT OTHERWISE IDENTIFIED
- VALVE: BALL
- VALVE: GLOBE
- VALVE: BUTTERFLY
- VALVE: ECCENTRIC PLUG
- VALVE: NON-ECCENTRIC PLUG
- VALVE: THREE WAY
- VALVE: FOUR WAY
- VALVE: CHECK
- VALVE: DIAPHRAGM
- VALVE: VPORT BALL
- VALVE: MUD
- VALVE: THERMAL SHUTOFF
- VALVE: NEEDLE
- VALVE: SLEEVE
- GATE: FLAP
- VALVE: VENTED BALL
- VALVE: DIVERTER
- VALVE: PRESSURE REDUCING
- VALVE: PRESSURE SUSTAINING
- VALVE: PRESSURE REDUCING (SELF ACTUATING TYPE)
- VALVE: PRESSURE SUSTAINING (SELF ACTUATING TYPE)
- P — VALVE: PILOT ACTUATED RELIEF
- VALVE: VACUUM RELIEF
- VALVE: PRESSURE RELIEF
- VALVE: PRESSURE/VACUUM RELIEF
- VALVE: ANGLE
- VALVE: SET STOP
- VALVE: PINCH
- VALVE: STOP CHECK
- VALVE: TELESCOPING
- VALVE: COMBINATION AIR
- VALVE: AIR RELEASE
- VALVE: AIR VACUUM
- VALVE: CHLORINE WITH YOKE
- M — CHLORINE VACUUM REGULATOR
- VALVE: KNIFE GATE
- BACKFLOW PREVENTER
- VACUUM BREAKER
- EXPLOSION RELIEF
- VALVE: GENERIC ROTARY

VALVE AND GATE ACTUATOR SYMBOLS

- HANDWHEEL ACTUATOR
- S — SOLENOID
- S / R — SOLENOID - MANUAL RESET
- S / R / R — SOLENOID - REMOTE RESET
- PRESSURE BALANCED DIAPHRAGM
- M — INTELLIGENT ELECTRIC
- M / SM — SMALL MOTOR ACTUATOR
- I/P — CURRENT - TO-PNEUMATIC ACTUATOR
- E/H — ELECTRIC-HYDRAULIC
- SPRING-DIAPHRAGM ACTUATOR OR OTHERWISE UNSPECIFIED
- P — PNEUMATIC ACTUATOR
- P / DA — PNEUMATIC ACTUATOR DOUBLE ACTING
- P / SC — PNEUMATIC ACTUATOR SPRING CLOSE
- P / SO — PNEUMATIC ACTUATOR SPRING OPEN
- FLOAT OPERATED VALVE
- SPRING OR WEIGHT ACTUATED RELIEF OR SAFETY VALVE ACTUATOR LOADED VALVE
- QUICK OPENING VALVE
- QUICK CLOSING VALVE
- LOADING/BACK PRESSURE VALVE

WATER & WASTEWATER SYMBOLS

- OZONE GENERATOR WITH POWER SUPPLY
- OZONE GENERATOR
- GRIT CONCENTRATOR & DEWATERING SCREW
- BAR SCREEN: MECHANICAL
- GRIT COLLECTOR: VORTEX TYPE
- RECTANGULAR BASIN
- SOLIDS COLLECTOR
- SOLIDS COLLECTOR W/SETTLING PLATES
- RECTANGULAR SEDIMENTATION BASIN
- UV HORIZONTAL BULBS
- MANUAL BAR SCREEN
- GAS FLARE
- GRIT CLASSIFIER
- GRAVITY FILTER
- GRAVITY THICKENER
- CIRCULAR SEDIMENTATION BASIN
- DAF
- BELT FILTER PRESS
- GRAVITY BELT THICKENER
- CENTRIFUGE
- RECTANGULAR SEDIMENTATION BASIN WITH SETTLING PLATES
- GRIT BASIN
- SLUDGE GRINDER: INLINE
- SLUDGE GRINDER: CHANNEL MOUNTED
- GRIT CONCENTRATOR

MATERIAL HANDLING EQUIPMENT SYMBOLS

- CYCLONE SEPARATER
- DUMPSTER
- BIN: LIVE BOTTOM
- BIN: SLIDING FRAME
- SCREEN: SINGLE VIBRATORY
- SCREEN: DOUBLE VIBRATORY
- GRINDER
- BIN - CLOSED TOP
- BIN - OPEN TOP
- HORIZONTAL BAR SCREEN
- MIXER: PUGMILL
- MIXER: BLENDER
- CONVEYOR: BELT
- CONVEYOR: VIBRATORY
- H — PISTON CAKE PUMP: SINGLE
- H / H — PISTON CAKE PUMP: DOUBLE
- CONVEYOR: SCREW
- HOPPER
- DUST HOPPER

GENERAL NOTES

1. IN GENERAL, THE P&ID SYMBOLS AND DEVICE IDENTIFICATIONS ARE BASED ON INTERNATIONAL SOCIETY OF AUTOMATION, STANDARD PRACTICE ANSI/ISA-5.1 (2009). SOME MODIFICATIONS, ADDITIONS AND ALTERATIONS HAVE BEEN MADE AS NEEDED TO ACCOMMODATE THE PROJECT REQUIREMENTS.
2. SOME CONTROL AND INTERLOCK REQUIREMENTS WHICH CAN BE MORE CLEARLY ILLUSTRATED ON SCHEMATIC DRAWINGS HAVE BEEN OMITTED FROM THE P&ID DRAWINGS.
3. THIS IS A GENERAL LEGEND SHEET. SOME SYMBOLS AND ABBREVIATIONS MAY NOT BE UTILIZED ON THIS SPECIFIC PROJECT.
4. PIPING AND EQUIPMENT LEGEND APPLIES TO P&ID SHEETS ONLY AND MAY DIFFER FROM LEGENDS FOR OTHER SHEETS.

(SCALE BAR IS 4" AT FULL SCALE) 0 1/2 1 2 3 4

PLOTTED: 1/18/2023 11:57:46 AM
FILE: C:\USERS\MAL79137\APPDATA\LOCAL\AUTODESK\AUTOCAD PLANT 3D\COLLABORATION\CACHE\406654\PID DWG\I-00-001.DWG
D11:1000
D11:1000

Black & Veatch Corporation
Kansas City, Missouri

olsson

THIS DOCUMENT WAS ORIGINALLY ISSUED AND SEALED ON JANUARY 24, 2023 BY KIRK H. IVY, A LICENSED PROFESSIONAL ENGINEER IN THE STATE OF ARKANSAS, E-16494

BEAVER WATER DISTRICT

WESTERN CORRIDOR PUMP STATION

100% SET

REVISIONS AND RECORD OF ISSUE

DESIGNED:	GKK
DETAILED:	PVR
CHECKED:	MJP, ACF
APPROVED:	BLB
DATE:	JANUARY 24, 2023
PROJECT NO.:	405654

GENERAL

INSTRUMENTATION

P&ID - LEGEND & ABBREVIATIONS - SHEET 1 OF 3

I-00-001

139 OF 159

INSTRUMENT AND I/O ABBREVIATIONS

MEANINGS OF IDENTIFICATION LETTERS

LETTER	FIRST LETTER			SUCCEEDING LETTERS		
	MEASURED OR INITIATING VARIABLE	VARIABLE MODIFIER		READOUT OR PASSIVE FUNCTION	OUTPUT OR ACTIVE FUNCTION	FUNCTION MODIFIER
A	ANALYSIS			ALARM		
B	BURNER, COMBUSTION			USER'S CHOICE	USER'S CHOICE	USER'S CHOICE
C	USER'S CHOICE				CONTROL	CLOSE
D	USER'S CHOICE	DIFFERENTIAL				DEVIATION
E	VOLTAGE (EMF)			SENSOR, PRIMARY ELEMENT		
F	FLOW, FLOW RATE	RATIO (FRACTION)				
G	USER'S CHOICE			GLASS, GAUGE, VIEWING DEVICE		
H	HAND (MANUALLY INITIATED)					HIGH
I	CURRENT (ELECTRICAL)			INDICATE		
J	POWER			SCAN		
K	TIME OR TIME-SCHEDULE	TIME RATE OF CHANGE			CONTROL STATION	
L	LEVEL			LIGHT		LOW
M	USER'S CHOICE	MOMENTARY				MIDDLE OR INTERMEDIATE
N	USER'S CHOICE			USER'S CHOICE	USER'S CHOICE	USER'S CHOICE
O	USER'S CHOICE			ORIFICE (RESTRICTION)		OPEN
P	PRESSURE OR VACUUM			POINT (TEST CONNECTION)		
Q	QUANTITY	INTEGRATE OR TOTALIZE		INTEGRATE OR TOTALIZE		
R	RADIATION			RECORD		RUN
S	SPEED OR FREQUENCY	SAFETY			SWITCH	STOP
T	TEMPERATURE				TRANSMIT	
U	MULTIVARIABLE			MULTIFUNCTION	MULTIFUNCTION	
V	VIBRATION OR MECHANICAL ANALYSIS				VALVE, DAMPER OR LOUVER	
W	WEIGHT OR FORCE			WELL, PROBE		
X	UNCLASSIFIED	X-AXIS		ACCESORY DEVICES OR UNCLASSIFIED	UNCLASSIFIED	UNCLASSIFIED
Y	EVENT, STATE, OR PRESENCE	Y-AXIS			AUXILIARY DEVICES	
Z	POSITION, DIMENSION	Z-AXIS			DRIVE, ACTUATOR OR FINAL CTRL ELEMENT	

GENERAL NOTES

1. IN GENERAL, THE P&ID SYMBOLS AND DEVICE IDENTIFICATIONS ARE BASED ON INTERNATIONAL SOCIETY OF AUTOMATION, STANDARD PRACTICE ANSI/ISA-5.1 (2009). SOME MODIFICATIONS, ADDITIONS AND ALTERATIONS HAVE BEEN MADE AS NEEDED TO ACCOMMODATE THE PROJECT REQUIREMENTS.
2. SOME CONTROL AND INTERLOCK REQUIREMENTS WHICH CAN BE MORE CLEARLY ILLUSTRATED ON SCHEMATIC DRAWINGS HAVE BEEN OMITTED FROM P&ID DRAWINGS.
3. THIS IS A GENERAL LEGEND SHEET. SOME SYMBOLS AND ABBREVIATIONS MAY NOT BE UTILIZED ON THIS SPECIFIC PROJECT. PIPING AND EQUIPMENT LEGEND APPLIES TO P&ID SHEETS.

PIPELINE MATERIAL CODE ABBREVIATIONS

PCCP	SECTION 02612, PRESTRESSED CONCRETE CYLINDER PIPE
CBWS	SECTION 02614, CONCRETE BAR-WRAPPED, STEEL CYLINDER PIPE
LHCPP	SECTION 02616, LOW HEAD CONCRETE PRESSURE PIPE
RCP	SECTION 02618, CONCRETE PIPE
PVC	SECTION 15061, POLYVINYL CHLORIDE PIPE
DIP	SECTION 15061, DUCTILE IRON PIPE
SP	SECTION 15062, STEEL PIPE
LWS-XX	SECTION 15063, LIGHT WALL STEEL PIPE
SS-XX1	SECTION 15064, STAINLESS STEEL PIPE, TUBING, AND ACCESSORIES
CSG-XX	SECTION 15065, MISCELLANEOUS STEEL PIPE, TUBING, AND ACCESSORIES
CS-XX	SECTION 15065, MISCELLANEOUS STEEL PIPE, TUBING, AND ACCESSORIES
FRPE-XX	SECTION 15066, FIBERGLASS REINFORCED PLASTIC PIPE (EXHAUST AIR SERVICE)
FRP-XX	SECTION 15067, MISCELLANEOUS PLASTIC PIPE, TUBING, AND ACCESSORIES
PVC-XX	SECTION 15067, MISCELLANEOUS PLASTIC PIPE, TUBING, AND ACCESSORIES
CPVC-XX	SECTION 15067, MISCELLANEOUS PLASTIC PIPE, TUBING, AND ACCESSORIES
PE-XX	SECTION 15067, MISCELLANEOUS PLASTIC PIPE, TUBING, AND ACCESSORIES
PP-XX	SECTION 15067, MISCELLANEOUS PLASTIC PIPE, TUBING, AND ACCESSORIES
PVDF-XX	SECTION 15067, MISCELLANEOUS PLASTIC PIPE, TUBING, AND ACCESSORIES
RPT-XX	SECTION 15067, MISCELLANEOUS PLASTIC PIPE, TUBING, AND ACCESSORIES
SS	SECTION 15068, AWWA STAINLESS STEEL PIPE
CI-XX	SECTION 15069, CAST IRON SOIL PIPE AND ACCESSORIES
CU-XX	SECTION 15070, COPPER TUBING AND ACCESSORIES
BR-XX	SECTION 15060, MISCELLANEOUS PIPING AND PIPE ASSEMBLY
HS-XX	SECTION 15060, MISCELLANEOUS PIPING AND PIPE ASSEMBLY
TG-XX	SECTION 15060, MISCELLANEOUS PIPING AND PIPE ASSEMBLY
CRP-XX	SECTION 15060, MISCELLANEOUS PIPING AND PIPE ASSEMBLY

1. XX= numbers 01-20

INSTRUMENT AND I/O ABBREVIATION DEFINITIONS

AAH	ANALYZER ALARM HIGH
AAHH	ANALYZER ALARM HIGH-HIGH
AAL	ANALYZER ALARM LOW
AALL	ANALYZER ALARM LOW-LOW
AAX	ALARM HORN
AAL	STROBE ALARM LIGHT
AE	ANALYZER SENSOR
AI	ANALYZER INDICATION
AIT	ANALYZER INDICATING TRANSMITTER
ASH	ANALYZER SWITCH HIGH
ASHH	ANALYZER SWITCH HIGH-HIGH
CB	CONTROL BLOCK REFERENCE (SCADA LEVEL)
FAL	FLOW ALARM LOW
FAH	FLOW ALARM HIGH
FC	FLOW CONTROLLER
FI	FLOW DIGITAL INDICATOR (LED OR SCREEN)
FIC	FLOW INDICATING CONTROLLER
FE	PRIMARY FLOW ELEMENT/SENSOR
FG	FLOW SIGHT GAUGE
FIT	FLOW INDICATING TRANSMITTER
FQG	FLOW TOTALIZING GAUGE
FQIT	FLOW TOTALIZING INDICATING TRANSMITTER
FSH	FLOW SWITCH HIGH
FSL	FLOW SWITCH LOW
FY	FLOW SIGNAL CONVERTER, REPEATER, OR ISOLATOR
HIC	HAND INDICATING CONTROLLER
HMS	MOMENTARY PUSHBUTTON OR SELECTOR SWITCH
HS	HAND SWITCH
IE	CURRENT ELEMENT/SENSOR
IAH	CURRENT ALARM HIGH (MOTOR OVERLOAD)
ISH	CURRENT SWITCH HIGH USED TO DETECT HIGH TORQUE)
JA	POWER FAILURE ALARM
JI	POWER INDICATOR
JL	POWER INDICATING LIGHT
JIT	POWER INDICATING TRANSMITTER
KQI	TIME TOTALIZING INDICATOR
LAL	LEVEL ALARM LOW
LALL	LEVEL ALARM LOW-LOW
LAH	LEVEL ALARM HIGH
LAHH	LEVEL ALARM HIGH-HIGH
LE	PRIMARY LEVEL ELEMENT/SENSOR
LG	LEVEL SIGHT GAUGE
LI	LEVEL INDICATOR (LED OR SCREEN)
LSL	LEVEL SWITCH LOW
LSLL	LEVEL SWITCH LOW LOW
LSH	LEVEL SWITCH HIGH
LSHH	LEVEL SWITCH HIGH-HIGH
LY	LEVEL SIGNAL CONVERTER, ISOLATOR, OR REPEATER
OAH	TORQUE ALARM HIGH
OAHH	TORQUE ALARM HIGH HIGH
OSH	TORQUE SWITCH HIGH
OSHH	TORQUE SWITCH HIGH-HIGH
PAL	PRESSURE ALARM LOW
PALL	PRESSURE ALARM LOW-LOW
PAH	PRESSURE ALARM HIGH
PAHH	PRESSURE ALARM HIGH-HIGH
PDG	DIFFERENTIAL PRESSURE GAUGE
PDI	DIFFERENTIAL PRESSURE INDICATOR (LED OR SCREEN)
PDIT	DIFFERENTIAL PRESSURE INDICATING TRANSMITTER
PDAH	DIFFERENTIAL PRESSURE ALARM HIGGH
PDAHH	DIFFERENTIAL PRESSURE ALARM HIGH-HIGH
PDSH	DIFFERENTIAL PRESSURE SWITCH HIGH
PDSHH	DIFFERENTIAL PRESSURE SWITCH HIGH-HIGH
PDSL	DIFFERENTIAL PRESSURE SWITCH LOW
PDSLL	DIFFERENTIAL PRESSURE SWITCH LOW-LOW
PE	PRESSURE SENSOR
PG	PRESSURE GAUGE
PI	PRESSURE INDICATOR (LED OR SCREEN)
PIT	PRESSURE INDICATING TRANSMITTER
PSL	PRESSURE SWITCH LOW
PSH	PRESSURE SWITCH HIGH
SI	SPEED INDICATION (LED OR SCREEN)
SC	SPEED CONTROL
SIT	SPEED INDICATING TRANSMITTER
SSL	SPEED SWITCH LOW
SIT	SPEED INDICATING TRANSMITTER
TAH	TEMPERATURE ALARM HIGH
TAHH	TEMPERATURE ALARM HIGH-HIGH
TAL	TEMPERATURE ALARM LOW
TDI	DIFFERENTIAL TEMPERATURE INDICATOR (LED OR SCREEN)
TDIT	DIFFERENTIAL TEMPERATURE TRANSMITTER
TE	TEMPERATURE SENSOR/RESISTANCE TEMPERATURE DETECTOR
TSH	TEMPERATURE SWITCH HIGH
TSHH	TEMPERATURE SWITCH HIGH HIGH
TSL	TEMPERATURE SWITCH LOW
TG	TEMPERATURE GAUGE
TI	TEMPERATURE INDICATOR (LED OR SCREEN)
TIT	TEMPERATURE INDICATING TRANSMITTER
UA	MULTIVARIABLE/COMMON ALARM/COMMON FAULT
UCR	RUN COMMAND
UCS	STOP COMMAND
VAH	VIBRATION ALARM HIGH
WE	PRIMARY WEIGHT SENSOR/LOAD CELL
WG	WEIGHT GAUGE
WIT	WEIGHT INDICATING TRANSMITTER
YA	GENERAL ALARM EVENT
YI	EVENT INDICATION (LED OR SCREEN)
YIR	RUNNING INDICATION
YIS	STOPPED INDICATION
YL	EVENT INDICATING LIGHT
YLR	RUNNING INDICATING LIGHT
YLS	STOPPED INDICATING LIGHT
ZI	POSITION INDICATOR
ZIC	CLOSED INDICATION
ZIO	OPEN INDICATION
ZLC	CLOSED INDICATING LIGHT
ZLO	OPEN INDICATING LIGHT
ZSC	CLOSED POSITION SWITCH
ZSO	OPEN POSITION SWITCH
ZIT	POSITION INDICATING TRANSMITTER
ZT	POSITION TRANSMITTER

GENERAL INSTRUMENT SYMBOLS

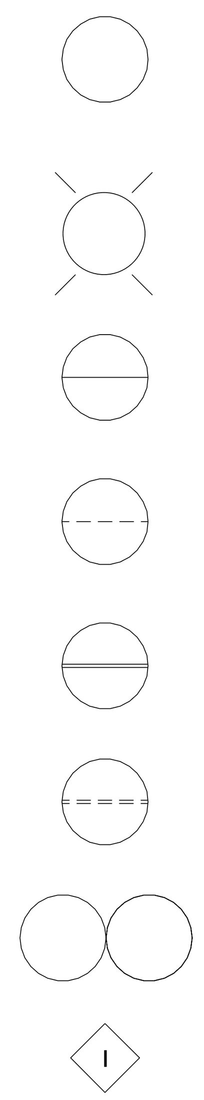

FIELD MOUNTED DISCRETE INSTRUMENT

PILOT LIGHT

DISCRETE INSTRUMENT MOUNTED ON FACE PRIMARY OF PANEL

DISCRETE INSTRUMENT MOUNTED BEHIND OR INSIDE OF PRIMARY PANEL

DISCRETE INSTRUMENT MOUNTED ON FACE OF LOCAL PANEL

DISCRETE INSTRUMENT MOUNTED BEHIND OR INSIDE OF LOCAL PANEL

SINGLE INSTRUMENT HOUSING CONTAINING TWO (OR MORE) INSTRUMENTATION FUNCTIONS

GENERAL CONTROL INTERLOCK FUNCTION, SEE SCHEMATICS AND SYSTEM SPECIFICATIONS FOR SPECIFIC FUNCTION

DIGITAL SYSTEMS INTERFACE SYMBOLS

NOTE: REFER TO DETAILED SYSTEM SPECIFICATIONS FOR FUNCTIONAL DESCRIPTION. ALSO SEE I/O SCHEDULES FOR COMPLETE INPUT AND OUTPUT LISTINGS.

CONTROL BLOCK DESCRIPTION REFERENCE SEE SPECIFICATION 13550

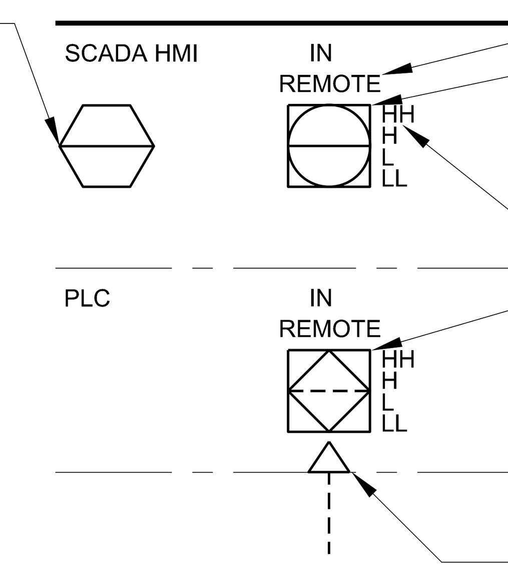

I/O DESCRIPTION

COMPUTER, DISTRIBUTED CONTROL SYSTEM OR DISPLAY FUNCTION BLOCK. LETTERS, TAG NUMBERS, ABBREVIATIONS AND OTHER ANNOTATIONS ARE SIMILAR TO THE GENERAL INSTRUMENT LEGEND.

CALCULATED ALARM DESIGNATION

PROGRAMMABLE LOGIC CONTROLLER SYSTEM I/O POINT. SEE I/O ABBREVIATIONS.

PLC I/O SYMBOL. DIRECTION OF ARROW DENOTES INPUT OR OUTPUT.

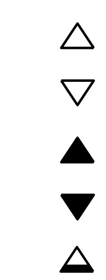

DISCRETE INPUT

DISCRETE OUTPUT

ANALOG INPUT

ANALOG OUTPUT

PULSE INPUT

INSTRUMENTATION SYMBOLOGY AND DESIGNATIONS

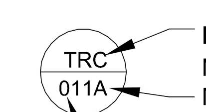

INSTRUMENT ABBREVIATION

NUMBER AFTER DASH (-1, -2, ETC) DENOTES MULTIPLE DEVICES USED IN IDENTICAL DUPLICATE SYSTEMS.
A LETTER AFTER THE LOOP NUMBER (31A, 31B, ETC) IS USED TO DISTINQUISH MULTIPLE SIMILAR DEVICES IN THE SAME INSTRUMENT LOOP.

LOOP DESIGNATION NUMBER

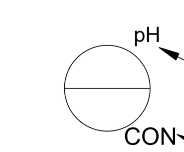

INSTRUMENT FUNCTION OR HAND SWITCH DESIGNATION

MEASUREMENT PRINCIPLE NOTATION (IF APPLICABLE)

FUNCTION DESIGNATIONS AND ABBREVIATIONS

MEASUREMENT PRINCIPLE NOTATIONS

CON	CONDUCTANCE
DP	DIFFERENTIAL PRESSURE SENSING
FLN	FLOW NOZZLE
FLT	FLOW TUBE
GWR	GUIDED WAVE RADAR
RAD	RADAR
US	ULTRASONIC
VENT	VENTURI TUBE

CALCULATED ALARM DESIGNATIONS

L	LOW
LL	LOW-LOW
H	HIGH
HH	HIGH-HIGH

INDICATING LIGHT/ALARM DESIGNATIONS

OVRLD	OVERLOAD
TRQ HI	TORQUE HIGH
TRQ HI-HI	TORQUE HIGH HIGH

INSTRUMENT FUNCTIONS

K	GAIN OR ATTENUATE (INPUT:OUTPUT)
-K	GAIN AND REVERSE
Σ	ADD OR SUM (ADD AND SUBTRACT)
Δ	SUBTRACT (DIFFERENCE)
$\sqrt{}$	EXTRACT SQUARE ROOT
$\div$	DIVIDE
F(X)	CHARACTERIZE SIGNAL
>	HIGH-SELECT
<	LOW-SELECT
$\times$	MULTIPLY
$\int$	INTEGRATE (TIME INTEGRAL)
CH4	METHANE
CL2	CHLORINE RESIDUAL
CLO2	CLORINE DIOXIDE
CO2	CARBON DIOXIDE
DO	DISSOLVED OXYGEN
FL	FLUORIDE
H2	HYDROGEN
H2S	HYDROGEN SULFIDE
LEL	LOWER EXPLOSIVE LIMIT
MCC	MOTOR CONTROL CENTER
MLSS	MIXED LIQUOR SUSPENDED SOLIDS
O2	OXYGEN (PURITY)
O3	OZONE
pH	pH
TURB	TURBIDITY

HAND SWITCH DESIGNATIONS

FR	FORWARD-REVERSE
HOA	HAND-OFF-AUTO
HOR	HAND-OFF-REMOTE
LOA	LOCAL-OFF-AUTO
LOR	LOCAL-OFF-REMOTE
LR	LOCAL REMOTE
OCA	OPEN-CLOSE-AUTO
OOA	ON-OFF-AUTO
OC	OPEN-CLOSE
OO	ON-OFF
OOR	ON-OFF-REMOTE
OSC	OPEN-STOP-CLOSE

TRANSDUCER & CONVERTER DESIGNATION

E	VOLTAGE
FSK	FREQUENCY SHIFT KEYING
H	HYDRAULIC
I	CURRENT
P	PNEUMATIC PULSE
PD	PULSE DURATION
PF	PULSE FREQUENCY
R	RESISTANCE (ELECTRICAL)

EXAMPLE: I/P = CURRENT TO PNEUMATIC TRANSDUCER

POWER SUPPLY ABBREVIATIONS

AS	AIR SUPPLY
ES	ELECTRIC SUPPLY
GS	GAS SUPPLY
HS	HYDRAULIC SUPPLY
NS	NITROGEN SUPPLY
SS	STEAM SUPPLY
WS	WATER SUPPLY
120V	120VAC

120V — POWER SUPPLY SOURCE LABEL. USED ONLY WHERE NECESSARY TO HELP CLARIFY AN INSTRUMENT OR SYSTEM FUNCTION.

BLACK & VEATCH
Black & Veatch Corporation
Kansas City, Missouri

olsson

THIS DOCUMENT WAS ORIGINALLY ISSUED AND SEALED ON JANUARY 24, 2023 BY BRIAN L. BUTLER, A LICENSED PROFESSIONAL ENGINEER IN THE STATE OF ARKANSAS, E-11777

BEAVER WATER DISTRICT

WESTERN CORRIDOR PUMP STATION

100% SET

REVISIONS AND RECORD OF ISSUE

DESIGNED:	GKK
DETAILED:	PVR
CHECKED:	MJP, ACF
APPROVED:	BLB
DATE:	JANUARY 24, 2023
PROJECT NO.:	405654

GENERAL

INSTRUMENTATION

P&ID - LEGEND & ABBREVIATIONS - SHEET 2 OF 3

I-00-002

(SCALE BAR IS 4" AT FULL SCALE) 0 1/2 1 2 3 4

PLOTTED: 1/18/2023 12:01:37 PM
FILE: C:\USERS\MAL79137\APPDATA\LOCAL\AUTODESK\AUTOCAD PLANT 3D\COLLABORATIONCACHE\405654\PID DWG\I-00-002.DWG
FD11000
D11000

SYSTEM CODE ABBREVIATIONS

ACE	ACETIC ACID	FLC	FLOCCULATION	RES	RESIDUALS
ACT	ACETYLENE	FLS	FLUORIDE SYSTEM	RAS	RETURN ACTIVATED SLUDGE
GAC	ACTIVATED CARBON - GRANULAR	GOX	GASEOUS OXYGEN	ROS	REVERSE OSMOSIS
AIR	AERATION AIR/PROCESS AIR	GSL	GASOLINE	SCR	SCREENINGS
AER	AERATION SYSTEM	GRS	GREASE	SCL	SECONDARY CLARIFICATION
ARW	AIR WASH	GRT	GRIT	SSC	SECONDARY SCUM
ALS	ALUMINUM SULFATE	GEN	GENERATOR	SEP	SEPTAGE
NSO4	AMMONIUM SULFATE	HEL	HELIUM	SET	SETTLED WATER
NH3	ANHYDROUS AMMONIA	HFL	HYDRAULIC FLUID	SEW	SEWAGE
AS	ANTI-SEALANT	HCL	HYDROCHLORIC ACID	NAC	SODA ASH
NHOH	AQUA AMMONIA	HFS	HYDROFLUOSILIC ACID (FLUORIDE)	NAL	SODIUM ALUMINATE
ARG	ARGON	HYD	HYDROGEN	NAM	SODIUM ALUMINATE
ASH	ASH	PER	HYDROGEN PEROXIDE	NBC	SODIUM BICARBONATE
BWH	BACKWASH - MEMBRANE/FILTER	INC	INCINERATION	NHS	SODIUM BISULFITE
BAL	BALLASTED FLOCCULATION	INFP	INFLUENT PUMPING	NCL	SODIUM CHLORIDE
BIO	BIOSOLIDS	INT	INTAKE	NCL2	SODIUM CHLORITE
BIT	BIOTOWER	LAG	LAGOON STORAGE	NAF	SODIUM FLUORIDE
BLS	BLENDED SLUDGE	LAP	LAND APPLICATION	NAX	SODIUM HEXAMETAPHOSPHATE
BNR	BNR	CAH	LIME - HYDRATED	NAOH	SODIUM HYDROXIDE
BRN	BRINE	CAO	LIME - QUICKLIME	NOCL	SODIUM HYPOCHLORITE
CACL	CALCIUM HYPOCHLORITE	LIM	LIME STABILIZATION	NASF	SODIUM SILICOFLUORIDE
CATS	CALCIUM THIOSULFATE	LOX	LIQUID OXYGEN	STM	STEAM
C02	CARBON DIOXIDE	LPG	LP GAS OR PROPANE GAS	STS	STORM SEWER
CAS	CARBON SLURRY	MGOH	MAGNESIUM HYDROXIDE	STW	STORM WATER
HCO3	CARBONIC ACID	MEM	MEMBRANE	SO2	SULFUR DIOXIDE
CEN	CENTRATE	MEG	METHANE GAS	HSO4	SULFURIC ACID
CEB	CHEMICAL ENHANCED BACKWASH - MEMBRANE	MTH	METHANOL	SW	SURFACE WASH
CL2	CHLORINE	MXL	MIXED LIQUOR	TERT	TERTIARY TREATMENT
CLO2	CHLORINE DIOXIDE	NG	NATURAL GAS	TPRS	THICKENED PRIMARY SLUDGE
CA	CITRIC ACID	NIT	NITROGEN	TWAS	THICKENED WASTE ACTIVATED SLUDGE
CIP	CLEAN IN PLACE	NIO	NITROUS OXIDE	THCK	THICKENING
COA	COAGULATION	ODC	ODOR CONTROL	TW	TREATED WATER
CAI	COMPRESSED AIR - INSTRUMENT	OIL	OIL	TF	TRICKLING FILTER
CMS	COMPRESSED AIR - SERVICE	FO	OIL - FUEL	UV	ULTRAVIOLET
CUS	COPPER SULFATE	OZN	OZONE	VAC	VACUUM
CI	CORROSION INHIBITOR	OZD	OZONE DESTRUCT	WW	WASH WATER
DCL	DECHLORINATION	PPP	PHOSPHATE	WAS	WASTE ACTIVATED SLUDGE
DET	DETERGENT	PO4	PHOSPHORIC ACID	WWW	WASTE WASH WATER
DWT	DEWATERING	PCL	POLYALUMINUM CHLORIDE	CDW	WATER - CONDENSATE
FUE	DIESEL FUEL	POLF	POLYMER	COLW	WATER - COOLING
DGG	DIGESTER GAS	KMN	POTASSIUM PERMANGANATE	DW	WATER - DISTILLED WATER
DGM	DIGESTER GAS MIXING	PAC	POWDERED ACTIVATE CARBON	FW	WATER - FINISH
DGS	DIGESTER SLUDGE	PAR	PRE-AERATION	IRW	WATER - IRRIGATION
DGA	DIGESTION - AEROBIC	PSD	PRESEDIMENTATION	OZW	WATER - OZONATED
DIG	DIGESTION - ANAEROBIC	PRC	PRIMARY CLARIFICATION	SWT	WATER - SEAL
DCB	DISINFECTION CONTACT BASIN	PSC	PRIMARY SCUM	HW	WATER - WATER HEATING
DAF	DISSOLVED AIR FLOTATION	PRS	PRIMARY SLUDGE	DEIW	WATER DEIONIZED
DRN	DRAINAGE	WWP	RAW WASTEWATER PUMPING	NPW	WATER NON-POTABLE
EFP	EFFLUENT PUMPING	RWP	RAW WATER PUMPING	PEW	WATER PLANT EFFLUENT
EXH	ENGINE EXHAUST	RWS	RAW WATER STORAGE	PW	WATER POTABLE
EQB	EQUALIZATION BASIN	RCS	RECIRCULATED SLUDGE	RW	WATER RAW
FEC	FERRIC CHLORIDE	RCW	RECLAIMED WATER	WWT	WET WEATHER TREATMENT
FES	FERRIC SULFATE	REF	REFRIGERANT	ZOP	ZINC ORTHOPHOSPHATE
FRC	FERROUS CHLORIDE				
FRS	FERROUS SULFATE				
FLT	FILTRATION				

PROCESS CODE ABBREVIATIONS

ACE_X	ACETIC ACID	FLC_X	FLOCCULATION	RES_X	RESIDUALS
ACT_X	ACETYLENE	GOX_X	GASEOUS OXYGEN	RAS_X	RETURN ACTIVATED SLUDGE
GAC_X	ACTIVATED CARBON - GRANULAR	GSL_X	GASOLINE	ROS_X	REVERSE OSMOSIS
AIR_X	AERATION AIR/PROCESS AIR	GRS_X	GREASE	SCR_X	SCREENINGS
AER_X	AERATION SYSTEM	GRT_X	GRIT	SCL_X	SECONDARY CLARIFICATION
ARW_X	AIR WASH	HEL_X	HELIUM	SSC_X	SECONDARY SCUM
ALS_X	ALUMINUM SULFATE	HFL_X	HYDRAULIC FLUID	SEP_X	SEPTAGE
NSO4_X	AMMONIUM SULFATE	HCL_X	HYDROCHLORIC ACID	SET_X	SETTLED WATER
NH3_X	ANHYDROUS AMMONIA	HFS_X	HYDROFLUOSILIC ACID (FLUORIDE)	SEW_X	SEWAGE
AS_X	ANTI-SEALANT	HYD_X	HYDROGEN	NAC_X	SODA ASH
NHOH_X	AQUA AMMONIA	PER_X	HYDROGEN PEROXIDE	NAL_X	SODIUM ALUMINATE
ARG_X	ARGON	INC_X	INCINERATION	NAM_X	SODIUM ALUMINATE
ASH_X	ASH	INFP_X	INFLUENT PUMPING	NBC_X	SODIUM BICARBONATE
BWH_X	BACKWASH - MEMBRANE/FILTER	INT_X	INTAKE	NHS_X	SODIUM BISULFITE
BAL_X	BALLASTED FLOCCULATION	LAG_X	LAGOON STORAGE	NCL_X	SODIUM CHLORIDE
BNR_X	BIOSOLIDS	LAP_X	LAND APPLICATION	NCL2_X	SODIUM CHLORITE
BIO_X	BIOTOWER	CAH_X	LIME - HYDRATED	NAF_X	SODIUM FLUORIDE
BIT_X	BLENDED SLUDGE	CAO_X	LIME - QUICKLIME	NAX_X	SODIUM HEXAMETAPHOSPHATE
BLS_X	BNR	LIM_X	LIME STABILIZATION	NAOH_X	SODIUM HYDROXIDE
BRN_X	BRINE	LOX_X	LIQUID OXYGEN	NOCL_X	SODIUM HYPOCHLORITE
CACL_X	CALCIUM HYPOCHLORITE	LPG_X	LP GAS OR PROPANE GAS	NASF_X	SODIUM SILICOFLUORIDE
CATS_X	CALCIUM THIOSULFATE	MGOH_X	MAGNESIUM HYDROXIDE	STM_X	STEAM
CO2_X	CARBON DIOXIDE	MEM_X	MEMBRANE	STS_X	STORM SEWER
CAS_X	CARBON SLURRY	MEG_X	METHANE GAS	STW_X	STORM WATER
HCO3_X	CARBONIC ACID	MTH_X	METHANOL	SO2_X	SULFUR DIOXIDE
CEN_X	CENTRATE	MXL_X	MIXED LIQUOR	HSO4_X	SULFURIC ACID
CEB_X	CHEMICAL ENHANCED BACKWASH - MEMBRANE	NG_X	NATURAL GAS	SW_X	SURFACE WASH
CL2_X	CHLORINE	NIT_X	NITROGEN	TERT_X	TERTIARY TREATMENT
CLO2_X	CHLORINE DIOXIDE	NIO_X	NITROUS OXIDE	TPRS_X	THICKENED PRIMARY SLUDGE
CA_X	CITRIC ACID	ODC_X	ODOR CONTROL	TWAS_X	THICKENED WASTE ACTIVATED SLUDGE
CIP_X	CLEAN IN PLACE	FO_X	OIL	THCK_X	THICKENING
COA_X	COAGULATION	OIL_X	OIL - FUEL	TW_X	TREATED WATER
CAI_X	COMPRESSED AIR - INSTRUMENT	OZN_X	OZONE	TF_X	TRICKLING FILTER
CMS_X	COMPRESSED AIR - SERVICE	OZD_X	OZONE DESTRUCT	UV_X	ULTRAVIOLET
CUS_X	COPPER SULFATE	PPP_X	PHOSPHATE	VAC_X	VACUUM
CI_X	CORROSION INHIBITOR	PO4_X	PHOSPHORIC ACID	WW_X	WASH WATER
DCL_X	DECHLORINATION	PCL_X	POLYALUMINUM CHLORIDE	WAS_X	WASTE ACTIVATED SLUDGE
DET_X	DETERGENT	POLF_X	POLYMER	WWW_X	WASTE WASH WATER
DWT_X	DEWATERING	KMN_X	POTASSIUM PERMANGANATE	CDW_X	WATER - CONDENSATE
FUE_X	DIESEL FUEL	PAC_X	POWDERED ACTIVATE CARBON	COLW_X	WATER - COOLING
DGG_X	DIGESTER GAS	PAR_X	PRE-AERATION	DW_X	WATER - DISTILLED WATER
DGM_X	DIGESTER GAS MIXING	PSD_X	PRESEDIMENTATION	FW_X	WATER - FINISH
DGS_X	DIGESTER SLUDGE	PRC_X	PRIMARY CLARIFICATION	IRW_X	WATER - IRRIGATION
DGA_X	DIGESTION - AEROBIC	PSC_X	PRIMARY SCUM	OZW_X	WATER - OZONATED
DIG_X	DIGESTION - ANAEROBIC	PRS_X	PRIMARY SLUDGE	SWT_X	WATER - SEAL
DCB_X	DISINFECTION CONTACT BASIN	WWP_X	RAW WASTEWATER PUMPING	HW_X	WATER - WATER HEATING
DAF_X	DISSOLVED AIR FLOTATION	RWP_X	RAW WATER PUMPING	DEIW_X	WATER DEIONIZED
DRN_X	DRAINAGE	RWS_X	RAW WATER STORAGE	NPW_X	WATER NON-POTABLE
EFP_X	EFFLUENT PUMPING	RCS_X	RECIRCULATED SLUDGE	PEW_X	WATER PLANT EFFLUENT
EXH_X	ENGINE EXHAUST	RCW_X	RECLAIMED WATER	PW_X	WATER POTABLE
EQB_X	EQUALIZATION BASIN	REF_X	REFRIGERANT	RW_X	WATER RAW
FEC_X	FERRIC CHLORIDE			WWT_X	WET WEATHER TREATMENT
FES_X	FERRIC SULFATE			ZOP_X	ZINC ORTHOPHOSPHATE
FRC_X	FERROUS CHLORIDE				
FRS_X	FERROUS SULFATE			X =	PROCESS CODE SUFFIX USED TO FURTHER SPECIFY A PROCESS STREAM (I.E. CL2_G FOR CHLORINE GAS OR CL2_S FOR CHLORINE SOLUTION)
FLT_X	FILTRATION				

FUNCTION CODE ABBREVIATIONS

ACMB	ACTIVATION CHAMBER	DWS	DEWATERING SCREW	HSC	HOIST, CHAIN	RSV	RESERVOIR	VB	VACUUM BREAK
AFD	ADJUSTABLE FREQUENCY DRIVE	DPS	DIAPHRAGM SEAL	HSE	HOIST, WIRE ROPE	RCO	RESIDUAL COLLECTOR	VRG	VACUUM REGULATOR
ACD	AERATOR, COARSE BUBBLE DIFFUSED	DIF	DIFFUSER, CHANNEL	HYDF	HYDRANT, FIRE	RM	ROTAMETER	AVR	VALVE, AIR RELEASE
AEFD	AERATOR, FINE PORE DIFFUSED	DFB	DIFFUSER BANK	HYDW	HYDRANT, WALL	RD	RUPTURE DISK	AVRV	VALVE, AIR-VACUUM
AFS	AERATOR, FLOATING SURFACE	DIP	DIFFUSER, PIPELINE	HYC	HYDROCYCLONE	SAMP	SAMPLER	VAG	VALVE, ANGLE
AES	AERATOR, SURFACE	DIR	DIFFUSER, TANK	INJ	INJECTOR, CHEMICAL	SCL	SCALE	VBM	VALVE, AWWA BALL
AFC	AFTERCOOLER	DGE	DIGESTER, AEROBIC	LS	LIME SLAKER	SC	SCALE, WEIGHT	VBF	VALVE, AWWA BUTTERFLY
AD	AIR DRYER	DGAP	DIGESTER, ANAEROBIC PRIMARY	MFM	MEMBRANE	SCRHT	SCREEN, HORIZONTAL	VBFP	VALVE, BACKFLOW PREVENTER
AF	AIR FILTER	DGAS	DIGESTER, ANAEROBIC SECONDARY	MBMF	MEMBRANE, MICROFILTRATION	SCRI	SCREEN, INLINE SLUDGE	VBM	VALVE, BALL MISCELLANEOUS
AR	AIR RECEIVER OR REGULATOR	DSUV	DISINFECTION UNIT, UV	MBNF	MEMBRANE, NANOFILTRATION	SCRA	SCREEN, MANUAL OR MECH CLEANED BAR	VCK	VALVE, CHECK
AS	AIR SEPARATOR	DAF	DISSOLVED AIR FLOTATION THICKENER	MBRO	MEMBRANE, REVERSE OSMOSIS	SCRS	SCREEN, STEP	VCN	VALVE, CONE
AST	AIR STRIPPER	DUC	DUST COLLECTOR	MBUF	MEMBRANE, ULTRAFILTRATION	SCT	SCREEN, TRAVELLING WATER	VDG	VALVE, DIAPHRAGM OPERATED
ATS	AUTOMATIC TRANSFER SWITCH	EDC	EDUCTOR	MELM	MIST ELIMINATOR	SCR	SCREEN, VIBRATORY	VGD	VALVE, DOUBLE DISC GATE
BFP	BACKFLOW PREVENTER	EQPE	ELECTRICAL EQUIPMENT, GENERAL	MXC	MIXER, CARBON	SCU	SCRUBBER	VPE	VALVE, ECCENTRIC PLUG
BSNA	BASIN, AERATION	EWSH	EMERGENCY EYE WASH FOUNTAIN	FLM	MIXER, FLOCCULATION	SMC	SCUM COLLECTOR	VER	VALVE, EXPLOSION RELIEF
BSNX	BASIN, ANOXIC/OXIC	ESHR	EMERGENCY SHOWER	MDM	MODEM	SCW	SCUM WEIR - ROTATING	VFW	VALVE, FOUR WAY
BNR	BASIN, BNR	EMEW	EMERGENCY SHOWER & EYEWASH	M	MOTOR	SEP	SEPARATOR, MOISTURE OR CYCLONE	VG	VALVE, GATE
BSNC	BASIN, CHLORINE CONTACT	EQPB	EQUIPMENT, BUILDING SERVICES	MXI	MIXER, IN-LINE	SGT	SIGHT GLASS - TALL	V	VALVE, GENERAL OR UNSPECIFIED
BSNO	BASIN, OXIC	EQPT	EQUIPMENT, GENERAL OR UNSPECIFIED	MXPG	MIXER, PUGMILL	SG	SIGHT GAUGE	VGL	VALVE, GLOBE
RBSN	BASIN, RECTANGULAR SEDIMENTATION	EV	EVAPORATOR	MXR	MIXER, RAPID	SIL	SILENCER	VBI	VALVE, INDUSTRIAL BUTTERFLY
BFPS	BELT FILTER PRESS	EXC	EXPANSION CHAMBER	MXS	MIXER, STATIC	SLC	SLUDGE COLLECTOR, CIRCULAR	VKG	VALVE, KNIFE GATE
B	BIN (STORAGE - ALL TYPES)	FAX	FAN, AXIAL FLOW	MXP	MIXER, SUBMERSIBLE, PROP OR BLENDER	GCLR	SLUDGE COLLECTOR, CROSS	VMR	VALVE, MATERIAL HANDLING ROTARY
BA	BIN ACTIVATOR	FAN	FAN, CENTRIFUGAL	MM	MUFFIN MONSTER	SFC	SLUDGE COLLECTOR, FLOC-CLARIFYING	VMD	VALVE, MUD
BLC	BLOWER, CENTRIFUGAL	FST	FENCE STIRRER	ORD	OVERFLOW ROOF DRAIN	SCS	SLUDGE COLLECTOR, SEC CLARIFIERS	VND	VALVE, NEEDLE
BL	BLOWER, POSITIVE DISPLACEMENT	FTSP	FILTER GAS PARTICULATE	ODU	OZONE DESTRUCT UNIT	SSC	SLUDGE COLLECTOR, SOLIDS CONTACT	PTV	VALVE, PILOT
BLR	BOILER	FLC	FILTER, CARTRIDGE TYPE	OGEN	OZONE GENERATOR	SLCS	SLUDGE COLLECTOR, STRAIGHT LINE	VPN	VALVE, PINCH
BDZ	BULLDOZER	FLCO	FILTER, COALESCING	PSU	OZONE POWER SUPPLY UNIT	GRD	SLUDGE GRINDER, INLINE OR CHANNEL	VPO	VALVE, PISTON OPERATED
CCLM	CALIBRATION COLUMN	FLT	FILTER, UNDERDRAINS OR PRESSURE	PP	PACKAGED PLANT	SBL	SOLIDS BLENDER-INLINE	VPL	VALVE, NON-ECCENTRIC PLUG
CFG	CENTRIFUGE	FSW	FILTER. SURFACE WASH EQUIPMENT	PCN	PARTICLE COUNTER	STR	STRAINER	VPC	VALVE, PRESSURE REDUCING
CHF	CHEMICAL FEEDER	FTTNG	FITTING, MISCELLANEOUS	PLT	PELLETIZER	STRB	STRAINER BASKET TYPE	VPC	VALVE, PRESSURE SUSTAINING
CGS	CHLORINE GAS SCRUBBER	FAR	FLAME ARRESTER	PS	PENSTOCK	STRY	STRAINER Y TYPE	VSP	VALVE, PRESSURE RELIEF
PCLR	CLARIFIER, PRIMARY	FC	FLAME CHECK	PIPE	PIPE	SRCH	SURGE CHAMBER	VSPV	VALVE, PRESSURE/VACUUM RELIEF
SCLR	CLARIFIER, SECONDARY	FLCH	FLOCCULATOR, HORIZONTAL	PSE	PLATE SETTLER	TSA	TANK, ABOVE GROUND STORAGE	VP	VALVE, PROCESS
CGR	CLASSIFIER, GRIT	FLCV	FLOCCULATOR, VERTICAL	INJ	POLYMER INJECTOR RING	TCN	TANK, AMMONIA STORAGE	VGR	VALVE, RESILIENT SEATED GATE
CW	CLEARWELL	FD	FLOOR DRAIN	PBC	PRESSURE BUILDING COIL	TCR	TANK, CRYOGENIC STORAGE	VS	VALVE, SAFETY
CMP	COMPRESSOR	FS	FLOW SPLITTER	PD	PULSATION DAMPNER	DWT	TANK, DOUBLE WALL	VSLV	VALVE, SLEEVE
CMB	COMPRESSOR, LIQUID RING	FE	FLUME, PARSHALL	PAD	PUMP, AIR DIAPHRAGM	TSE	TANK, ELEVATED STORAGE	VSL	VALVE, SOLENOID
CMR	COMPRESSOR, ROTARY SCREW	FMSP	FOAM SEPARATOR	PCL	PUMP, CENTRIFUGAL	TX	TANK, EXPANSION	VTV	VALVE, TELESCOPING
CMPS	COMPRESSOR, STEAM	FL	FORKLIFT	PDM	PUMP, DIAPHRAGM METERING	TNK	TANK, FRP CHEMICAL STORAGE	VTS	VALVE, THERMAL SHUTOFF
CTR	CONTAINER, PROCESS	CHF	GAS FEEDER	PHW	PUMP, HEATING WATER	TNK	TANK, GENERAL OR UNSPECIFIED	VTW	VALVE, THREE WAY
COB	CONVEYOR, BELT	GF	GAS FLARE	PHE	PUMP, HORIZONTAL END SUCTION	TCP	TANK, METHANOL	VVB	VALVE, VACUUM BREAKER
COS	CONVEYOR, SCREW	GWH	GAS WATER HEATER	PSC	PUMP, HORIZONTAL SPLIT CASE	SMPT	TANK, SAMPLER	VSV	VALVE, VACUUM RELIEF
CFA	COVER, ALUMINUM DOME BASIN	GFL	GATE, FLAP	PPS	PUMP, PERISTALTIC	TCS	TANK, CHLORINE CONTACTOR	VVP	VALVE, V-PORT BALL
CFD	COVER, FIXED DIGESTER	GSD	GATE, SLIDE	PPL	PUMP, PLUNGER	TSW	TANK, FLAT TOP STEEL WATER	VAP	VAPORIZER
CFL	COVER, FLOATING DIGESTER	GSC	GATE, SLUICE	PPC	PUMP, PROGRESSING CAVITY	TRP	TRAP, DRIP	VSLB	VESSEL, BOOT
DCG	COVER, GAS HOLDER	G	GATE, WEIR	PSE	PUMP, SCREW ENCLOSED	TRPS	TRAP, SEDIMENT	WC	WEIR, CIPOLETTI
DCM	COVER, MEMBRANE	GEN	GENERATOR, ENGINE (BACKUP POWER)	PSE	PUMP, SCREW OPEN	TRK	TRUCK	WR	WEIR, RECTANGULAR
CRN	CRANE	GBT	GRAVITY BELT THICKENER	PCL	PUMP, SUBMERSIBLE	TB	TURBINE	WV	WEIR, V-NOTCH
CRG	CRANE, GANTRY	GVT	GRAVITY THICKENER	PCH	PUMP, SUBMERSIBLE CHOPPER	TBC	TURBINE COMPRESSOR	WLHC	WELL, HORIZONTAL COLLECTOR
CRJ	CRANE, JIB	GRD	GRINDER PULVERIZER	PSS	PUMP, SUBMERSIBLE SUMP	TBG	TURBINE ENGINE	WLV	WELL, VERTICAL
CRP	CRANE, PORTABLE GANTRY	GRB	GRIT BASIN, VORTEX TYPE	PSP	PUMP, SUMP	UPS	UNINTERRUPTABLE POWER SUPPLY		
CRT	CRANE, TRAVELLING BRIDGE	GRV	GRIT SCREW CONCENTRATOR	P	PUMP, POSITIVE DISPLACEMENT, ROTARY, DRUM OR BELL MOUNTED	UVE	UV REACTOR		
CYL	CYLINDER, CHLORINE	HEX	HEAT EXCHANGER			UVL	UV REACTOR, HORIZONTAL OR VERTICAL		
CYG	CYLINDER, GAS	HST	HOIST	PVD	PUMP, VERTICAL DIFFUSION VANE				
				PVE	PUMP, VERTICAL END SUCTION				
				PVW	PUMP, VERTICAL WET PIT				

AREA CODE ABBREVIATIONS

42	PUMP STATION
43	ELECTRICAL BUILDING
44	ENGINE GENERATORS

BLACK & VEATCH

Black & Veatch Corporation
Kansas City, Missouri

olsson

THIS DOCUMENT WAS ORIGINALLY ISSUED AND SEALED ON JANUARY 24, 2023 BY BRIAN L. BUTLER, A LICENSED PROFESSIONAL ENGINEER IN THE STATE OF ARKANSAS, E-11777

BEAVER WATER DISTRICT

WESTERN CORRIDOR PUMP STATION

100% SET

REVISIONS AND RECORD OF ISSUE

DESIGNED:	GKK
DETAILED:	PVR
CHECKED:	MJP, ACF
APPROVED:	BLB
DATE:	JANUARY 24, 2023
PROJECT NO.:	405654

GENERAL

INSTRUMENTATION

P&ID - LEGEND & ABBREVIATIONS - SHEET 3 OF 3

I-00-003

141 OF 159

(SCALE BAR IS 4" AT FULL SCALE) 0 1/2 1 2 3 4

PLOTTED: 1/18/2023 12:02:44 PM
FILE: C:\USERS\MAL79137\APPDATA\LOCAL\AUTODESK\AUTOCAD PLANT 3D\COLLABORATIONCACHE\405654\PID DWG\I-00-003.DWG
FD11000
D11000

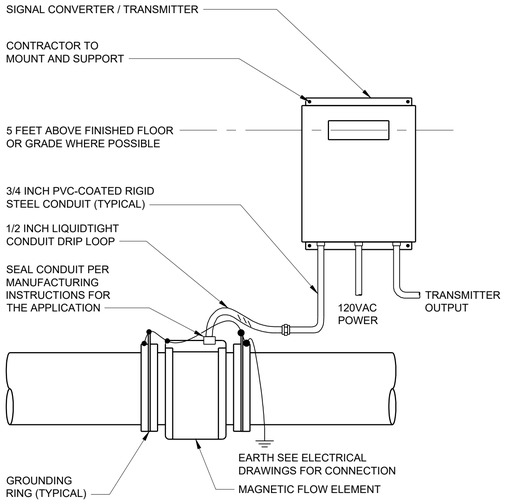

NOTE:
1. PIPE TO BE SUPPORTED ON BOTH SIDES OF METER.

A MAGNETIC FLOWMETER

NO SCALE
(TYPICAL FOR : 42-PW-FE/FIT-301 AND 42-PW-FE/FIT-401)

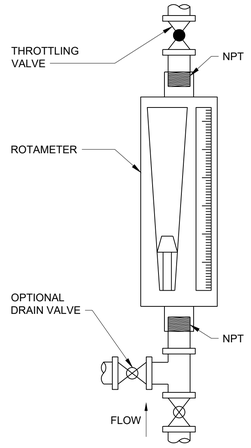

B ROTAMETER

NO SCALE
(TYPICAL FOR : 42-PW-FG-001, 42-PW-FG-002, 42-PW-FG-003, 42-PW-FG-004, 42-PW-FG-005)

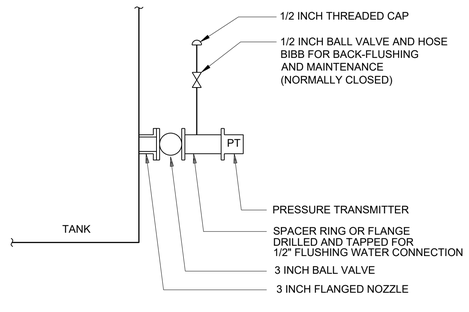

C FLANGE MOUNTED PRESSURE TRANSMITTER

NO SCALE
(TYPICAL FOR : 42-PW- LIT-300 AND 42-PW- LIT-400)

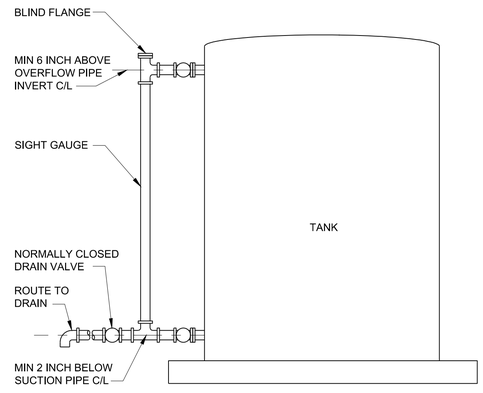

D TANK LEVEL GAUGE

NO SCALE
(TYPICAL FOR : 42-PW- LG-300 AND 42-PW- LG-400)

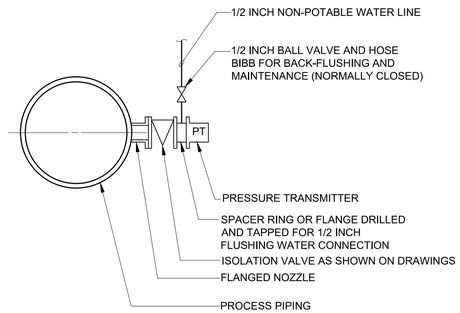

E PRESSURE TRANSMITTER

NO SCALE
(TYPICAL FOR : 42-PW-PIT-001, 42-PW-PIT-300, 42-PW-PIT-301, 42-PW-PIT-302, 42-PW-PIT-400, 42-PW-PIT-401, 42-PW-PIT-402, 43-GEN-PIT-110, 43-GEN-PIT-120)

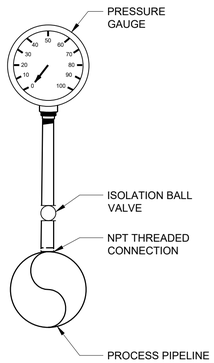

F PRESSURE GAUGE

NO SCALE
(TYPICAL FOR : 42-PW-PG-001, 42-PW-PG-300, 42-PW-PG-301, 42-PW-PG-301A, 42-PW-PG-302, 42-PW-PG-302A, 42-PW-PG-303, 42-PW-PG-303A, 42-PW-PG-305, 42-PW-PG-305A, 42-PW-PG-400, 42-PW-PG-401, 42-PW-PG-401A, 42-PW-PG-402, 42-PW-PG-402A, 42-PW-PG-403, 42-PW-PG-403A, 42-PW-PG-405, 42-PW-PG-405A)

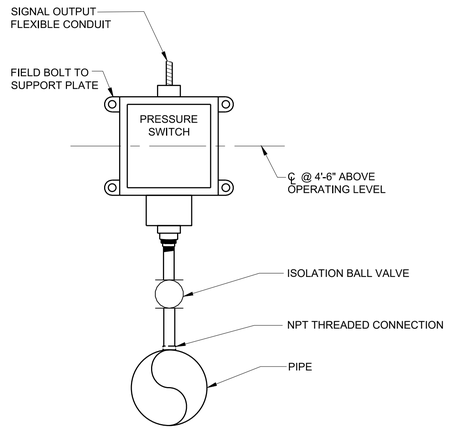

G FIELD-MOUNT PRESSURE SWITCH

NO SCALE
(TYPICAL FOR : 42-PSL-305)

(SCALE BAR IS 4" AT FULL SCALE) 0 1/2 1 2 3 4

PLOTTED: 1/18/2023 12:03:53 PM
FILE: C:\USERS\MAL7915\APPDATA\LOCAL\AUTODESK\AUTOCAD PLANT 3D\COLLABORATION\CACHE\405654\PID DWG\I-00-501.DWG
STYLE: ISO 129 DIM

Black & Veatch Corporation
Kansas City, Missouri

THIS DOCUMENT WAS ORIGINALLY ISSUED AND SEALED ON JANUARY 24, 2023 BY BRIAN L. BUTLER, A LICENSED PROFESSIONAL ENGINEER IN THE STATE OF ARKANSAS, E-11777

BEAVER WATER DISTRICT

WESTERN CORRIDOR PUMP STATION

100% SET

REVISIONS AND RECORD OF ISSUE

DESIGNED:	GKK
DETAILED:	PVR
CHECKED:	MJP, ACF
APPROVED:	BLB
DATE:	JANUARY 24, 2023
PROJECT NO.:	405654

GENERAL

INSTRUMENTATION

INSTRUMENT INSTALLATION DETAILS SHEET 1 OF 2

I-00-501

142 OF 159

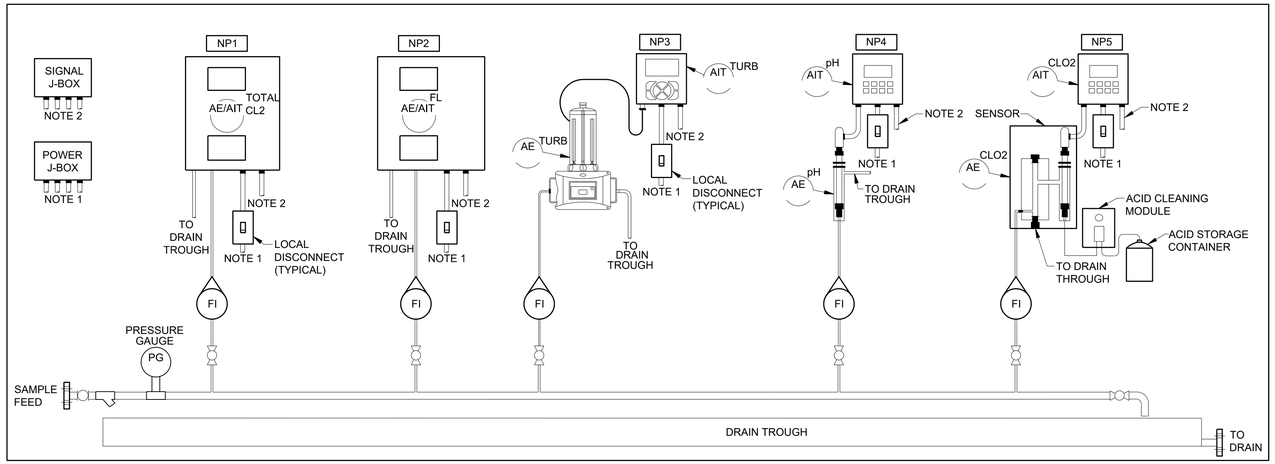

H ANALYZER PANEL INSTALLATION DETAILS

(TYPICAL FOR : 42-PW-AE/AIT-101, 42-PW-AE/AIT-102, 42-PW-AE/AIT-103, 42-PW-AE/AIT-104, 42-PW-AE/AIT-105)

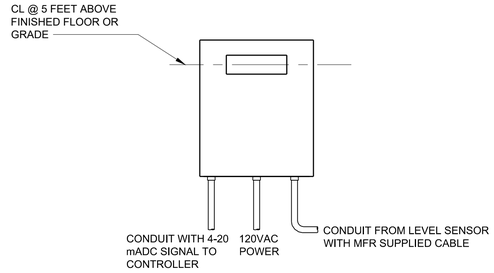

I WALL MOUNT TRANSMITTER

NO SCALE

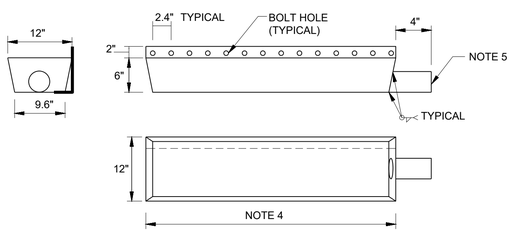

J WATER QUALITY STATION DRAIN TROUGH DETAILS

NO SCALE

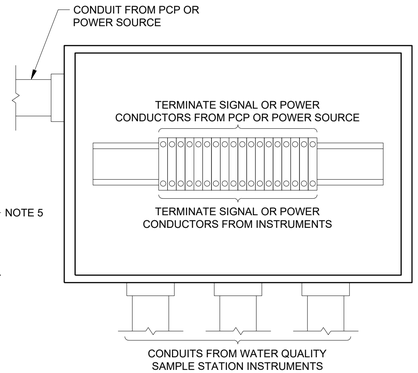

K TYPICAL WATER QUALITY SAMPLE STATION JUNCTION BOX

NO SCALE

NOTES

1. ROUTE 120 VAC POWER WIRING FROM POWER J-BOX TO EACH INSTRUMENT IN 3/4 INCH CONDUIT. PROVIDE A LOCAL DISCONNECT FOR EACH INSTRUMENT. POWER J-BOX SHALL BE NEMA 4X RATED.
2. ROUTE ANALOG SIGNAL WIRES FROM EACH INSTRUMENT TO SIGNAL J-BOX IN 3/4 INCH CONDUIT. PROVIDE KNIFE DISCONNECT TERMINAL BLOCKS WITHIN THE J-BOX. SIGNAL J-BOX SHALL BE NEMA 4X RATED.
3. A. PROVIDE NEMA 4X ENCLOSURE SIZED LARGE ENOUGH TO HOUSE THE REQUIRED TERMINAL BLOCKS.
   B. MOUNT DIN RAIL ON CENTER OF ENCLOSURE BACK PANEL. PROVIDE TERMINAL BLOCKS PER SPECIFICATIONS.
   C. PROVIDE FUSED TERMINAL BLOCKS AND FUSES FOR THE EQUIPMENT POWER CIRCUITS AS REQUIRED.
4. A. CONSTRUCT THROUGH USING 14 GA 304 STAINLESS STEEL.
   B. ALL WELDS SHALL BE CONTINUOUS.
   C. PROVIDE 1/8 INCH STAINLESS STEEL BOLTS, 2 WASHERS AND NUT FOR EACH BOLT HOLE FOR CONNECTION TO POLY BOARD.
   D. DIMENSION TO COINCIDE WITH POLY BOARD WIDTH.
   E. CONNECT TO DRAIN WITH FITTING.

GENERAL NOTES

1. DIMENSIONS SHOWN ARE NEAREST TO ACTUAL HOWEVER CONTRACTOR TO FINALIZE DIMENSIONS OF SAMPLE PANEL BASED ON THE ACTUAL DIMENSIONS OF ANALYZERS.
2. MAXIMUM OPERATION HEIGHT OF ANY INSTRUMENT / DEVICE SHALL BE 5 FEET.
3. ANALYZER BOARDS PLACED OUTSIDE BUILDING SHALL BE PROVIDED WITH SUNSHADE.

PLOTTED: 1/18/2023 12:05:27 PM
FILE: C:\USERS\MAL79137\APPDATA\LOCAL\AUTODESK\AUTOCAD PLANT 3D\COLLABORATION\CACHE\405654\PID DWG\I-00-502.DWG
FD11000
D11000

(SCALE BAR IS 4" AT FULL SCALE) 0 1/2 1 2 3 4

BLACK & VEATCH

Black & Veatch Corporation
Kansas City, Missouri

olsson

THIS DOCUMENT WAS ORIGINALLY ISSUED AND SEALED ON JANUARY 24, 2023 BY BRIAN L. BUTLER, A LICENSED PROFESSIONAL ENGINEER IN THE STATE OF ARKANSAS, E-11777

BEAVER WATER DISTRICT

WESTERN CORRIDOR PUMP STATION

100% SET

REVISIONS AND RECORD OF ISSUE

DESIGNED:	GKK
DETAILED:	PVR
CHECKED:	MJP, ACF
APPROVED:	BLB
DATE:	JANUARY 24, 2023
PROJECT NO.:	405654

GENERAL

INSTRUMENTATION

INSTRUMENT INSTALLATION DETAILS SHEET 2 OF 2

I-00-502

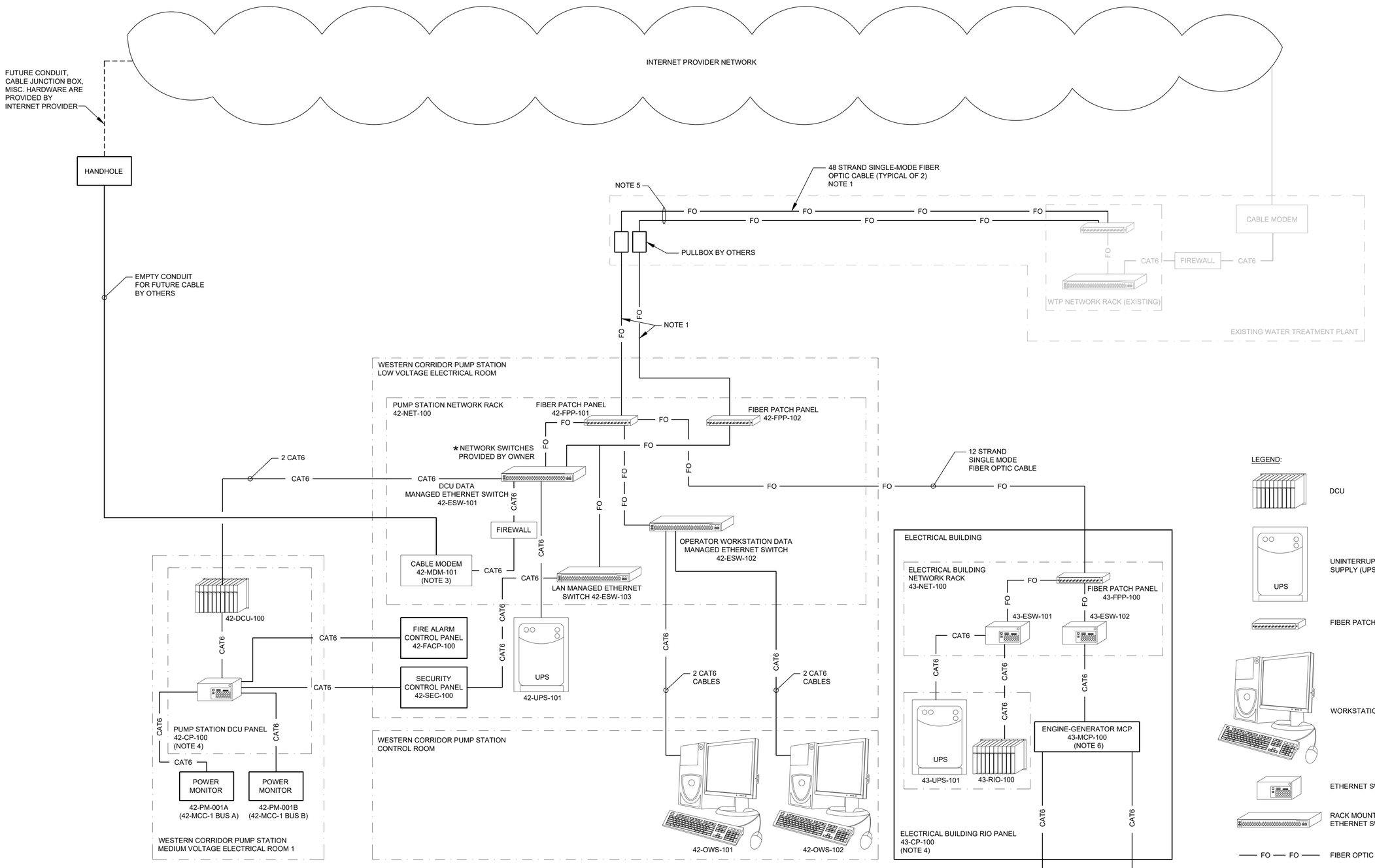

NOTES:

1. THE FIBER OPTIC CABLE WILL BE PULLED INTO THE PUMP STATION, TERMINATED ON THE PATCH PANELS AND TESTED BY THE PIPELINE CONTRACTOR.
2. CONTRACTOR SHALL CONFIGURE ETHERNET SWITCHES SUCH THAT THE NETWORKS SHOWN ARE ISOLATED FROM ONE ANOTHER.
3. MODEM PROVIDED BY THE INTERNET PROVIDER. INTERNET DATA IS FOR BACKUP MONITORING OF PROCESS EQUIPMENT ONLY. THE MODEM SHALL BE DISCONNECTED UNLESS MANUALLY CONNECTED WHEN REQUIRED. OWNER MAY CHOSE DSL IN THE FUTURE.
4. DISTRIBUTED CONTROL UNITS AND REMOTE I/O MODULES WILL BE PROCURED AND PROVIDED, INSTALLED AND TESTED BY THE OWNER. CONTRACTOR SHALL TERMINATE ALL POWER AND CONTROL WIRING FROM PROCESS EQUIPMENT TO DCU I/O MODULES. OWNER WILL PROVIDE DCU PROGRAMMING OUTSIDE OF THIS CONTRACT.
5. FIBER OPTIC CABLE AND CONDUIT FROM EXISTING WTP TO THE SITE IS PROVIDED UNDER PIPELINE CONTRACT (BY OTHERS) TO BE ROUTED TO CONTRACTOR PROVIDED PULLBOX AS SHOWN ON ELECTRICAL PLANS.
6. PROVIDED BY THE ENGINEER GENERATOR SUPPLIER.

(SCALE BAR IS 4" AT FULL SCALE) 0 1/2 1 2 3 4

PLOTTED: 1/18/2023 12:29:26 PM
FILE: C:\USERS\MAL79137\APPDATA\LOCAL\AUTODESK\AUTOCAD PLANT 3D\COLLABORATION\CACHE405654\PID DWG\I-00-601.DWG
FDT1000
DT1000

Black & Veatch Corporation
Kansas City, Missouri

THIS DOCUMENT WAS ORIGINALLY ISSUED AND SEALED ON JANUARY 24, 2023 BY BRIAN L. BUTLER, A LICENSED PROFESSIONAL ENGINEER IN THE STATE OF ARKANSAS, E-11777

BEAVER WATER DISTRICT

WESTERN CORRIDOR PUMP STATION

100% SET

REVISIONS AND RECORD OF ISSUE	
DESIGNED:	GKK
DETAILED:	PVR
CHECKED:	MJP, ACF
APPROVED:	BLB
DATE:	JANUARY 24, 2023
PROJECT NO.:	405654

GENERAL

INSTRUMENTATION

DCS NETWORK CONTROL BLOCK DIAGRAM SHEET 1 OF 4

I-00-601

144 OF 159

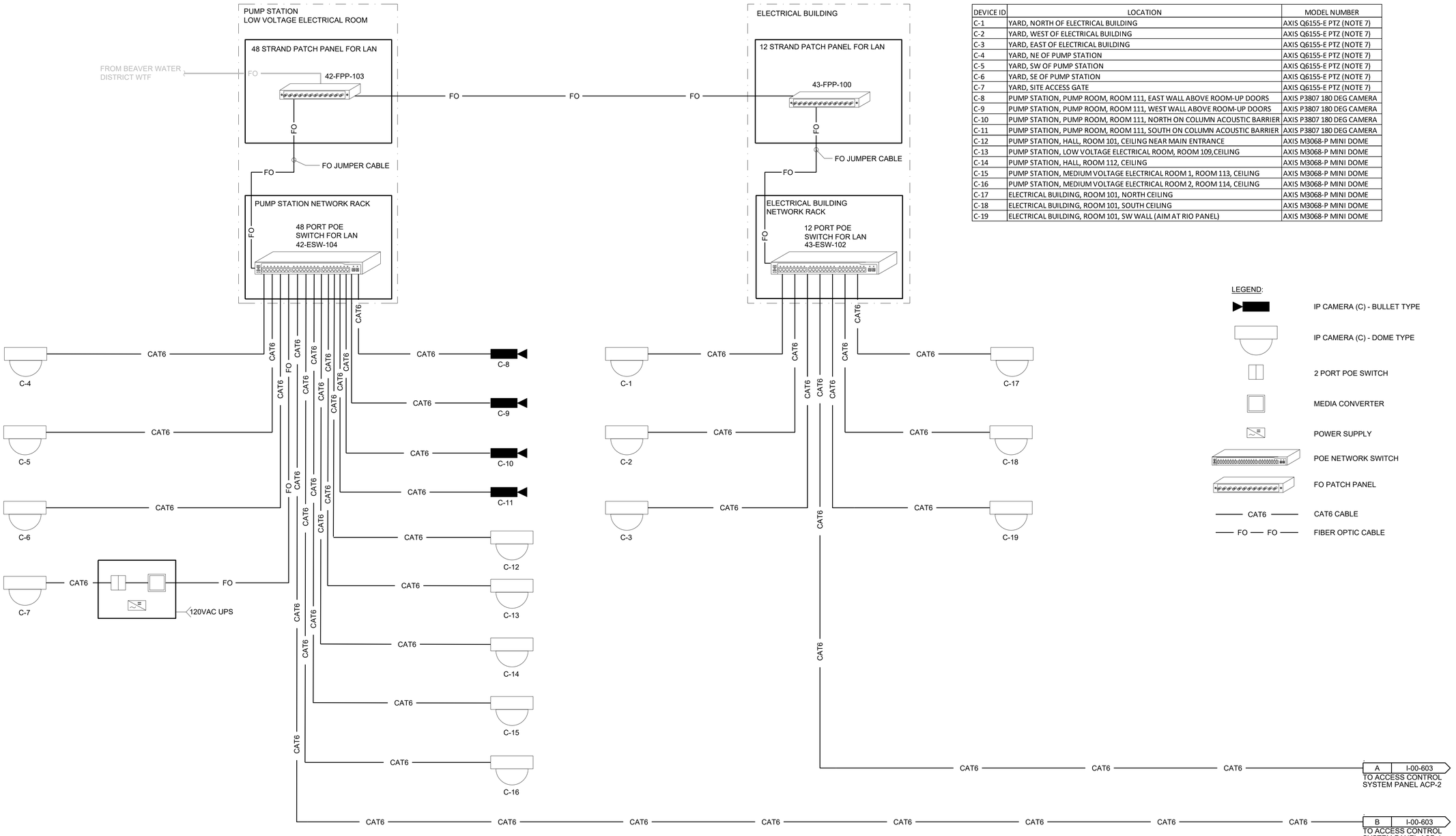

DEVICE ID	LOCATION	MODEL NUMBER
C-1	YARD, NORTH OF ELECTRICAL BUILDING	AXIS Q6155-E PTZ (NOTE 7)
C-2	YARD, WEST OF ELECTRICAL BUILDING	AXIS Q6155-E PTZ (NOTE 7)
C-3	YARD, EAST OF ELECTRICAL BUILDING	AXIS Q6155-E PTZ (NOTE 7)
C-4	YARD, NE OF PUMP STATION	AXIS Q6155-E PTZ (NOTE 7)
C-5	YARD, SW OF PUMP STATION	AXIS Q6155-E PTZ (NOTE 7)
C-6	YARD, SE OF PUMP STATION	AXIS Q6155-E PTZ (NOTE 7)
C-7	YARD, SITE ACCESS GATE	AXIS Q6155-E PTZ (NOTE 7)
C-8	PUMP STATION, PUMP ROOM, ROOM 111, EAST WALL ABOVE ROOM-UP DOORS	AXIS P3807 180 DEG CAMERA
C-9	PUMP STATION, PUMP ROOM, ROOM 111, WEST WALL ABOVE ROOM-UP DOORS	AXIS P3807 180 DEG CAMERA
C-10	PUMP STATION, PUMP ROOM, ROOM 111, NORTH ON COLUMN ACOUSTIC BARRIER	AXIS P3807 180 DEG CAMERA
C-11	PUMP STATION, PUMP ROOM, ROOM 111, SOUTH ON COLUMN ACOUSTIC BARRIER	AXIS P3807 180 DEG CAMERA
C-12	PUMP STATION, HALL, ROOM 101, CEILING NEAR MAIN ENTRANCE	AXIS M3068-P MINI DOME
C-13	PUMP STATION, LOW VOLTAGE ELECTRICAL ROOM, ROOM 109,CEILING	AXIS M3068-P MINI DOME
C-14	PUMP STATION, HALL, ROOM 112, CEILING	AXIS M3068-P MINI DOME
C-15	PUMP STATION, MEDIUM VOLTAGE ELECTRICAL ROOM 1, ROOM 113, CEILING	AXIS M3068-P MINI DOME
C-16	PUMP STATION, MEDIUM VOLTAGE ELECTRICAL ROOM 2, ROOM 114, CEILING	AXIS M3068-P MINI DOME
C-17	ELECTRICAL BUILDING, ROOM 101, NORTH CEILING	AXIS M3068-P MINI DOME
C-18	ELECTRICAL BUILDING, ROOM 101, SOUTH CEILING	AXIS M3068-P MINI DOME
C-19	ELECTRICAL BUILDING, ROOM 101, SW WALL (AIM AT RIO PANEL)	AXIS M3068-P MINI DOME

LEGEND:

- IP CAMERA (C) - BULLET TYPE
- IP CAMERA (C) - DOME TYPE
- 2 PORT POE SWITCH
- MEDIA CONVERTER
- POWER SUPPLY
- POE NETWORK SWITCH
- FO PATCH PANEL
- CAT6 — CAT6 CABLE
- FO — FO — FIBER OPTIC CABLE

GENERAL NOTES:

1. FOR CONDUIT PLAN AND CCTV CAMERA LOCATION REFER ELECTRICAL SITE PLAN SECURITY PLAN DRAWING NUMBER E-00-102 TO 105, E-01-102 AND E-43-101.
2. SECURITY EQUIPMENT SHOWN ON THIS DRAWING REPRESENTS ANTICIPATED SECURITY DEVICES TO BE INSTALLED BY SECURITY CONTRACTOR. CONTRACTOR SHALL OBTAIN FINAL SECURITY SUBCONTRACTOR DRAWINGS.
3. ELECTRICAL CONTRACTOR SHALL SUPPLY AND INSTALL ALL CONDUIT REQUIRED BY SECURITY SYSTEM DESIGN.
4. FINAL TYPES AND QUANTITIES OF WIRES SHALL BE COORDINATED BY THE CONTRACTOR WITH THE SECURITY SYSTEM SUPPLIER. IF THE EQUIPMENT PURCHASED BY THE SECURITY SYSTEM SUPPLIER REQUIRES ADDITIONAL OR LARGER CONDUITS. THE CONTRACTOR SHALL SUPPLY AND INSTALL AT NO ADDITIONAL COST TO THE OWNER.
5. ALL OUTDOOR CAMERAS SHALL BE WEATHER PROOF RATED, SUITABLE FOR OUTDOOR APPLICATION.
6. CONTRACTOR TO PROVIDE REQUIRED CABLE AND ACCESSORIES ALONG WITH REQUIRED RATING UPS WITH 30 MINUTES BACKUP.
7. PROVIDE WITH A Q6100 PARAPET MOUNT ON 20 FEET FOLDING POLE WISCONSIN LIGHTING LAB'S LIGHT POLES PLUS VS-SSEH-20-4040-07-AB-FP OR APPROVED EQUAL WITH WINCH AND 24 INCH NEMA 4, 316 STAINLESS STEEL BOX WITH A 120V DUPLEX RECEPTACLE.

(SCALE BAR IS 4" AT FULL SCALE) 0 1/2 1 2 3 4

PLOTTED: 1/18/2023 12:40:43 PM
FILE: C:\USERS\MAL79137\APPDATA\LOCAL\AUTODESK\AUTOCAD PLANT 3D\COLLABORATION\CACHE405654\PID DWG\I-00-602.DWG
PDT1000
DT1000

Black & Veatch Corporation
Kansas City, Missouri

olsson

THIS DOCUMENT WAS ORIGINALLY ISSUED AND SEALED ON JANUARY 24, 2023 BY BRIAN L. BUTLER, A LICENSED PROFESSIONAL ENGINEER IN THE STATE OF ARKANSAS, E-11777

BEAVER WATER DISTRICT

WESTERN CORRIDOR PUMP STATION

100% SET

REVISIONS AND RECORD OF ISSUE

DESIGNED:	GKK
DETAILED:	VDM
CHECKED:	MJP, ACF
APPROVED:	BLB
DATE:	JANUARY 24, 2023
PROJECT NO.:	405654

GENERAL

SHEET DISCIPLINE

CCTV NETWORK CONTROL BLOCK DIAGRAM SHEET 2 OF 4

I-00-602

145 OF 159

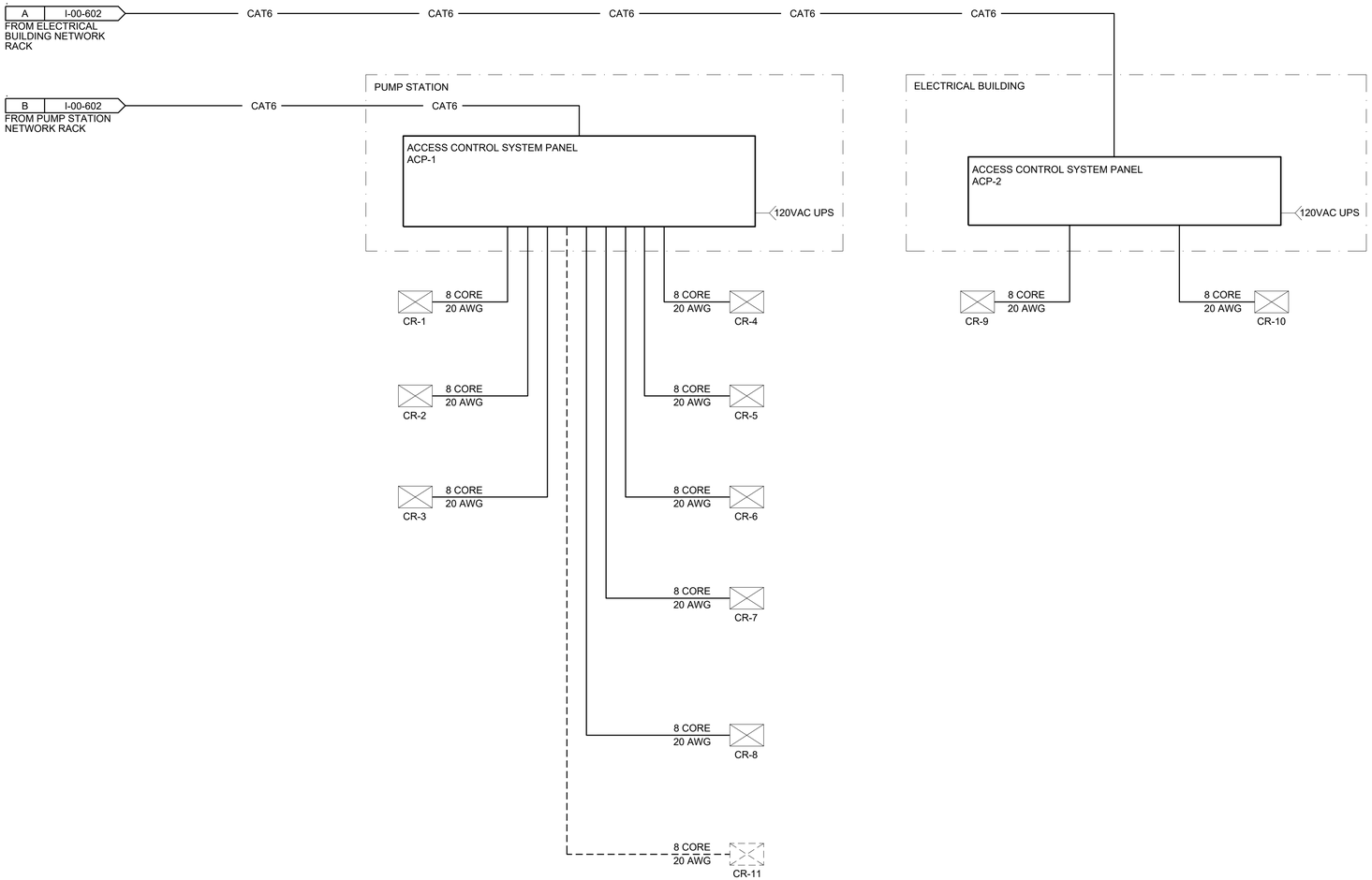

LEGEND:

- CARD READER (CR)
- CAT6 — CAT6 CABLE
- FO — FO — FIBER OPTIC CABLE

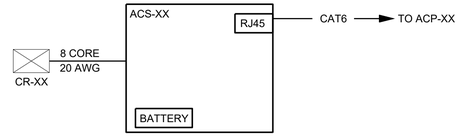

TYPICAL DETAILS OF EACH CARD READER CONNECTION

DEVICE ID	LOCATION	KEYED MECHANICAL LOCK	PROXIMITY CARD READER	HONEYWELL 968XTP MAGNETIC SWITCH	ELECTRIC DOOR STRIKE	BOSCH DS160 PIR	MAG LOCK OR LATCH RETRACTION	PHONE SYSTEM	GATE OPERATOR
CR-1	PUMP STATION, MAIN ENTRANCE ROOM, ROOM 101, DOOR 101A		X	X	X	X	X		
	PUMP STATION, CONTROL ROOM, ROOM 107, DOOR 107			X					
CR-2	PUMP STATION, WORKSHOP, ROOM 110, DOOR 110A	X	X	X	X	X			
CR-3	PUMP STATION, PUMP ROOM, ROOM 111, DOOR 111A		X	X	X	X			
CR-4	PUMP STATION, PUMP ROOM, ROOM 111, DOOR 111C		X	X	X	X			
CR-4	PUMP STATION, PUMP ROOM, ROOM 111, DOOR 111E		X	X	X	X			
CR-5	PUMP STATION, PUMP ROOM, ROOM 111, DOOR 111G		X	X	X	X			
CR-6	PUMP STATION, MEDIUM VOLTAGE ELECTRICAL ROOM 1, ROOM 113, DOOR 113B		X	X	X	X			
CR-7	PUMP STATION, MEDIUM VOLTAGE ELECTRICAL ROOM 2, ROOM 114, DOOR 114B		X	X	X	X			
CR-8	PUMP STATION, MEDIUM VOLTAGE ELECTRICAL ROOMS HALLWAY, DOOR 112		X	X	X	X			
CR-9	ELECTRICAL BUILDING, ROOM 101, DOOR 101A		X	X	X	X			
CR-10	ELECTRICAL BUILDING, ROOM 101, DOOR 101C	X	X	X	X	X			
CR-11	YARD, SITE ACCESS GATE		FUTURE					FUTURE	FUTURE

GENERAL NOTES:

1. FOR CONDUIT PLAN AND CARD READER LOCATION REFER ELECTRICAL SITE PLAN SECURITY PLAN DRAWING NUMBER E-42-102 TO 105, E-01-102 AND E-43-101.
2. SECURITY EQUIPMENT SHOWN ON THIS DRAWING REPRESENTS ANTICIPATED SECURITY DEVICES TO BE INSTALLED BY SECURITY CONTRACTOR. CONTRACTOR SHALL OBTAIN FINAL SECURITY SUBCONTRACTOR DRAWINGS.
3. ELECTRICAL CONTRACTOR SHALL SUPPLY AND INSTALL ALL CONDUIT REQUIRED BY SECURITY SYSTEM DESIGN.
4. FINAL TYPES AND QUANTITIES OF WIRES SHALL BE COORDINATED BY THE CONTRACTOR WITH THE SECURITY SYSTEM SUPPLIER. IF THE EQUIPMENT PURCHASED BY THE SECURITY SYSTEM SUPPLIER REQUIRES ADDITIONAL OR LARGER CONDUITS. THE CONTRACTOR SHALL SUPPLY AND INSTALL AT NO ADDITIONAL COST TO THE OWNER.

Black & Veatch Corporation
Kansas City, Missouri

olsson

THIS DOCUMENT WAS ORIGINALLY ISSUED AND SEALED ON JANUARY 24, 2023 BY BRIAN L. BUTLER, A LICENSED PROFESSIONAL ENGINEER IN THE STATE OF ARKANSAS, E-11777

BEAVER WATER DISTRICT

WESTERN CORRIDOR PUMP STATION

100% SET

REVISIONS AND RECORD OF ISSUE

DESIGNED:	GKK
DETAILED:	PVR
CHECKED:	MJP, ACF
APPROVED:	BLB
DATE:	JANUARY 24, 2023
PROJECT NO.:	405654

GENERAL

SHEET DISCIPLINE

CARD READER NETWORK CONTROL BLOCK DIAGRAM SHEET 3 OF 4

I-00-603

(SCALE BAR IS 4" AT FULL SCALE) 0 1/2 1 2 3 4

PLOTTED: 1/18/2023 12:50:33 PM
FILE: C:\USERS\MAL79137\APPDATA\LOCAL\AUTODESK\AUTOCAD PLANT 3D\COLLABORATION\CACHE\405654\PID DWG\I-00-603.DWG
D11000
D11000

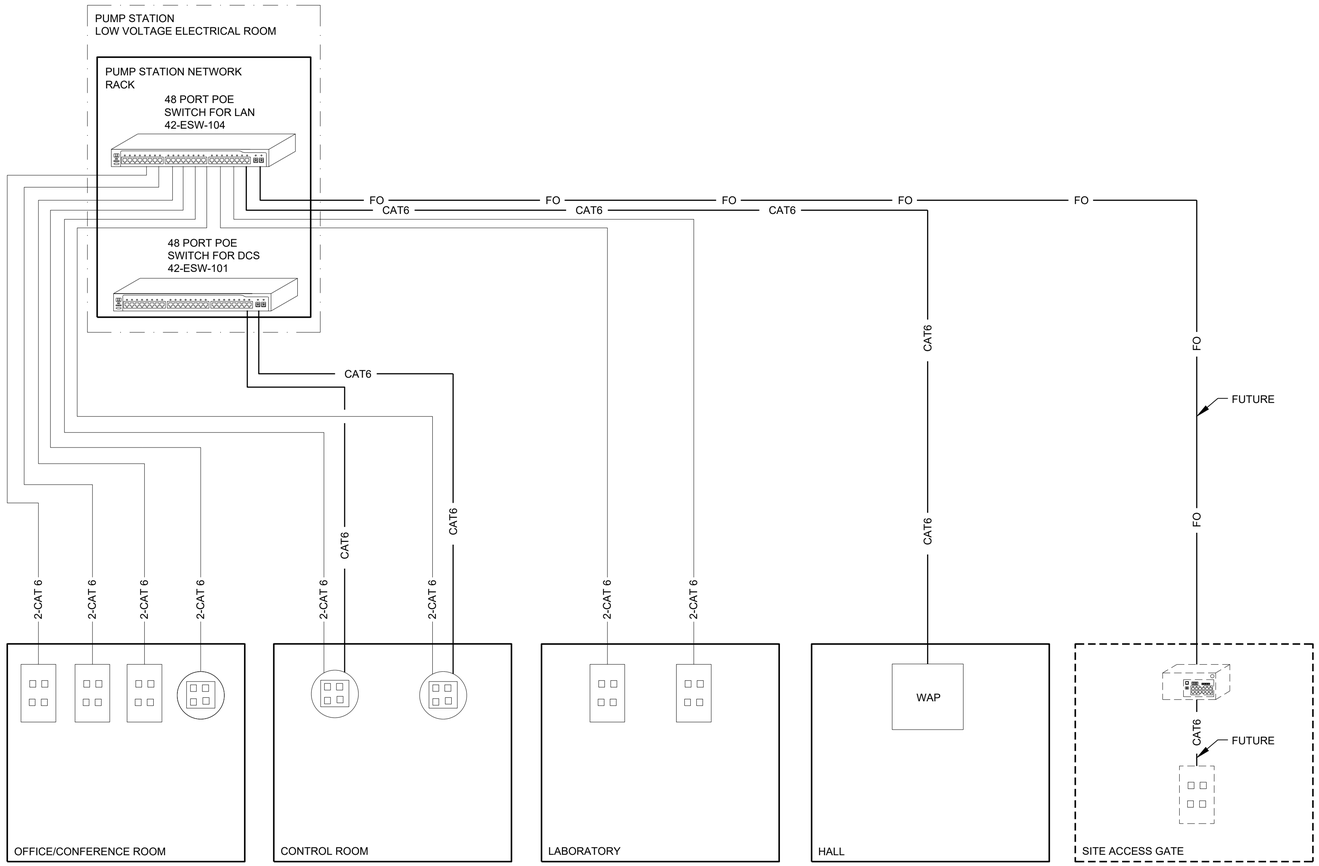

LEGEND:

- CAT6 — CAT6 CABLE
- FO — FO — FIBER OPTIC CABLE
- POE NETWORK SWITCH
- MULTIMEDIA (MM) FLOOR MOUNTED ACCESS POINT
- MULTIMEDIA (MM) WALL MOUNTED ACCESS POINT
- WAP — WIRELESS ACCESS POINT
- ETHERNET SWITCH

DEVICE ID	LOCATION	DCS NETWORK	OFFICE LAN	PHONE SYSTEM	REMARKS
MM-1	PUMP STATION, HALL, ROOM 101, CEILING		X		WIRELESS ACCESS POINT, CONFIRM FINAL LOCATION WITH OWNER
MM-2	PUMP STATION, CONROL ROOM, ROOM 107, FLOOR UNDER DESK	X	X	X	FLOOR PLATE. CONFIRM FINAL LOCATION WITH OWNER
MM-3	PUMP STATION, CONROL ROOM, ROOM 107, FLOOR UNDER DESK	X	X	X	FLOOR PLATE. CONFIRM FINAL LOCATION WITH OWNER
MM-4	PUMP STATION LABORATORY, ROOM 105, EAST		X	X	WALL PLATE
MM-5	PUMP STATION LABORATORY, ROOM 105. WEST		X	X	WALL PLATE
MM-6	PUMP STATION, OFFICE/CONFERENCE ROOM, ROOM 104, NORTH SIDE OF EAST WALL		X	X	WALL PLATE
MM-7	PUMP STATION, OFFICE/CONFERENCE ROOM, ROOM 104, SOUTH SIDE OF EAST WALL		X	X	WALL PLATE
MM-8	PUMP STATION, OFFICE/CONFERENCE ROOM, ROOM 104, WEST WALL		X	X	WALL PLATE
MM-9	PUMP STATION, OFFICE/CONFERENCE ROOM, ROOM 104, FLOOR UNDER CONFERENCE TABLE		X	X	FLOOR PLATE. CONFIRM FINAL LOCATION WITH OWNER
MM-10	YARD, SITE ACCESS GATE			FUTURE	OUTDOOR RATED WALL PLATE

GENERAL NOTES:

1. FOR CONDUIT PLAN AND CARD READER LOCATION REFER ELECTRICAL SITE PLAN SECURITY PLAN DRAWING NUMBER E-42-102 TO 105, E-01-102 AND E-43-101.
2. SECURITY EQUIPMENT SHOWN ON THIS DRAWING REPRESENTS ANTICIPATED SECURITY DEVICES TO BE INSTALLED BY SECURITY CONTRACTOR. CONTRACTOR SHALL OBTAIN FINAL SECURITY SUBCONTRACTOR DRAWINGS.
3. ELECTRICAL CONTRACTOR SHALL SUPPLY AND INSTALL ALL CONDUIT REQUIRED BY SECURITY SYSTEM DESIGN.
4. FINAL TYPES AND QUANTITIES OF WIRES SHALL BE COORDINATED BY THE CONTRACTOR WITH THE SECURITY SYSTEM SUPPLIER. IF THE EQUIPMENT PURCHASED BY THE SECURITY SYSTEM SUPPLIER REQUIRES ADDITIONAL OR LARGER CONDUITS. THE CONTRACTOR SHALL SUPPLY AND INSTALL AT NO ADDITIONAL COST TO THE OWNER.

PLOTTED: 1/18/2023 2:08:58 PM
FILE: C:\USERS\MALI79137\APPDATA\LOCAL\AUTODESK\AUTOCAD PLANT 3D\COLLABORATIONCACHE\405654\PID DWG\I-00-604.DWG
PDT1000
D1000

(SCALE BAR IS 4" AT FULL SCALE) 0 1/2 1 2 3 4

BLACK & VEATCH
Black & Veatch Corporation
Kansas City, Missouri

olsson

THIS DOCUMENT WAS ORIGINALLY ISSUED AND SEALED ON JANUARY 24, 2023 BY BRIAN L. BUTLER, A LICENSED PROFESSIONAL ENGINEER IN THE STATE OF ARKANSAS, E-11777

BEAVER WATER DISTRICT

WESTERN CORRIDOR PUMP STATION

100% SET

REVISIONS AND RECORD OF ISSUE

DESIGNED:	GKK
DETAILED:	VDM
CHECKED:	MJP, ACF
APPROVED:	BLB
DATE:	JANUARY 24, 2023
PROJECT NO.:	405654

GENERAL

SHEET DISCIPLINE

LAN AND DCS NETWORK CONTROL BLOCK DIAGRAM SHEET 4 OF 4

I-00-604

FIELD		42-DCU-100 PANEL
DESCRIPTION		
SPRINGDALE DISCHARGE HEADER FLOW	FIT 301	AI
SPRINGDALE DISCHARGE HEADER PRESSURE	PIT 301	AI
WESTERN CORRIDOR PS SUCTION HEADER WATER FREE CHLORINE	AIT 001	AI
WESTERN CORRIDOR PS SUCTION HEADER WATER FLUORIDE	AIT 002	AI
WESTERN CORRIDOR SUCTION HEADER WATER TURBIDITY	AIT 003	AI
WESTERN CORRIDOR PS SUCTION HEADER WATER pH	AIT 004	AI
WESTERN CORRIDOR PS SUCTION HEADER WATER CHLORINE DIOXIDE (CLO2)	AIT 005	AI
WESTERN CORRIDOR PS SUCTION HEADER PRESSURE	PIT 001	AI
	42-AFD-301	
SPRINGDALE PUMP NO. 1 SPEED INDICATION		AI
SPRINGDALE PUMP NO. 1 SPEED CMD		AO
SPRINGDALE PUMP NO. 1 RUNNING		DI
SPRINGDALE PUMP NO. 1 IN-REMOTE		DI
SPRINGDALE PUMP NO. 1 COMMON FAIL		DI
SPRINGDALE PUMP NO. 1 FAIL TO START		DI
SPRINGDALE PUMP NO. 1 E-STOP		DI
SPRINGDALE PUMP NO. 1 RUN CMD		DO
SPRINGDALE PUMP NO. 1 HIGH TEMPERATURE		DI

FIELD		42-DCU-100 PANEL
DESCRIPTION		
SPRINGDALE PUMP NO. 1 DISCHARGE CHECK VALVE OPEN	ZIO 301	DI
	42-AFD-302	
SPRINGDALE PUMP NO. 2 SPEED INDICATION		AI
SPRINGDALE PUMP NO. 2 SPEED CMD		AO
SPRINGDALE PUMP NO. 2 RUNNING		DI
SPRINGDALE PUMP NO. 2 IN-REMOTE		DI
SPRINGDALE PUMP NO. 2 COMMON FAIL		DI
SPRINGDALE PUMP NO. 2 FAIL TO START		DI
SPRINGDALE PUMP NO. 2 E-STOP		DI
SPRINGDALE PUMP NO. 2 RUN CMD		DO
SPRINGDALE PUMP NO. 2 HIGH TEMPERATURE		DI
SPRINGDALE PUMP NO. 2 DISCHARGE CHECK VALVE OPEN	ZIO 302	DI
	42-AFD-303	
SPRINGDALE PUMP NO. 3 SPEED INDICATION		AI
SPRINGDALE PUMP NO. 3 SPEED CMD		AO
SPRINGDALE PUMP NO. 3 RUNNING		DI
SPRINGDALE PUMP NO. 3 IN-REMOTE		DI
SPRINGDALE PUMP NO. 3 COMMON FAIL		DI
SPRINGDALE PUMP NO. 3 FAIL TO START		DI
SPRINGDALE PUMP NO. 3 E-STOP		DI
SPRINGDALE PUMP NO. 3 RUN CMD		DO
SPRINGDALE PUMP NO. 3 HIGH TEMPERATURE		DI

BLACK & VEATCH

Black & Veatch Corporation
Kansas City, Missouri

olsson

THIS DOCUMENT WAS ORIGINALLY ISSUED AND SEALED ON JANUARY 24, 2023 BY BRIAN L. BUTLER, A LICENSED PROFESSIONAL ENGINEER IN THE STATE OF ARKANSAS, E-11777

BEAVER WATER DISTRICT

WESTERN CORRIDOR PUMP STATION

100% SET

REVISIONS AND RECORD OF ISSUE

DESIGNED:	GKK
DETAILED:	PVR
CHECKED:	BLB, ACF
APPROVED:	BLB
DATE:	JANUARY 24, 2023
PROJECT NO.:	405654

GENERAL

SHEET DISCIPLINE

INSTRUMENT INTERCONNECTION DIAGRAM SHEET 1 OF 4

I-00-605

(SCALE BAR IS 4" AT FULL SCALE) 0 1/2 1 2 3 4

PLOTTED: 1/18/2023 2:10:25 PM
FILE: C:\USERS\MAL79137\APPDATA\LOCAL\AUTODESK\AUTOCAD PLANT 3D\COLLABORATIONCACHE\405654\PID DWG\I-00-605.DWG
FD11000
D11000

FIELD		42-DCU-100 PANEL
DESCRIPTION		
SPRINGDALE PUMP NO. 3 DISCHARGE CHECK VALVE OPEN	ZIO 303	DI
SPRINGDALE PUMP STATION AIR COMPRESSOR 1 RUNNING	42-LCP-300	DI
SPRINGDALE PUMP STATION AIR COMPRESSOR 1 COMMON FAIL	42-LCP-300	DI
SPRINGDALE PUMP STATION AIR COMPRESSOR 1 STOP CMD	42-LCP-300	DO
SPRINGDALE PUMP STATION / STANDBY AIR COMPRESSOR 2 COMMON FAIL	42-LCP-301	DI
SPRINGDALE PUMP STATION / STANDBY AIR COMPRESSOR 2 RUNNING	42-LCP-301	DI
SPRINGDALE PUMP STATION / STANDBY AIR COMPRESSOR 2 STOP CMD	42-LCP-301	DO
SPRINGDALE PUMP STATION AIR COMPRESSOR DISCHARGE PRESSURE	PIT 302	AI
SPRINGDALE AIR RECEIVER TANK PRESSURE LOW	PSL 305	DI
SPRINGDALE PUMP STATION SURGE TANK PRESSURE	SURGE TANK LCP	AI
SPRINGDALE PUMP STATION SURGE TANK LEVEL	SURGE TANK LCP	AI
SPRINGDALE SURGE TANK COMPRESSED AIR INLET SOLENOID VALVE 1 OPEN CMD	SURGE TANK LCP	DO
SPRINGDALE SURGE TANK COMPRESSED AIR INLET SOLENOID VALVE 2 OPEN CMD	SURGE TANK LCP	DO
PUMP STATION 48VDC BATTERY CABINET NO. 2 HIGH H2 ALARM	42-LCP-102	DI
PUMP STATION 48VDC BATTERY CABINET NO. 3 HIGH H2 ALARM	42-LCP-103	DI
FAYETTEVILLE DISCHARGE HEADER FLOW	FIT 401	AI
FAYETTEVILLE DISCHARGE HEADER PRESSURE	PIT 401	AI

FIELD		42-DCU-100 PANEL
DESCRIPTION		
FAYETTEVILLE PUMP NO. 1 SPEED INDICATION	42-AFD-401	AI
FAYETTEVILLE PUMP NO. 1 SPEED CMD	42-AFD-401	AO
FAYETTEVILLE PUMP NO. 1 RUNNING	42-AFD-401	DI
FAYETTEVILLE PUMP NO. 1 IN-REMOTE	42-AFD-401	DI
FAYETTEVILLE PUMP NO. 1 COMMON FAIL	42-AFD-401	DI
FAYETTEVILLE PUMP NO. 1 FAIL TO START	42-AFD-401	DI
FAYETTEVILLE PUMP NO. 1 E-STOP	42-AFD-401	DI
FAYETTEVILLE PUMP NO. 1 RUN CMD	42-AFD-401	DO
FAYETTEVILLE PUMP NO. 1 HIGH TEMPERATURE	42-AFD-401	DI
FAYETTEVILLE AIR RECEIVER TANK PRESSURE LOW	PSL 405	DI
FAYETTEVILLE PUMP NO. 1 DISCHARGE CHECK VALVE OPEN	ZIO 401	DI
FAYETTEVILLE PUMP NO. 2 SPEED INDICATION	42-AFD-402	AI
FAYETTEVILLE PUMP NO. 2 SPEED CMD	42-AFD-402	AO
FAYETTEVILLE PUMP NO. 2 RUNNING	42-AFD-402	DI
FAYETTEVILLE PUMP NO. 2 IN-REMOTE	42-AFD-402	DI
FAYETTEVILLE PUMP NO. 2 COMMON FAIL	42-AFD-402	DI
FAYETTEVILLE PUMP NO. 2 FAIL TO START	42-AFD-402	DI
FAYETTEVILLE PUMP NO. 2 E-STOP	42-AFD-402	DI
FAYETTEVILLE PUMP NO. 2 RUN CMD	42-AFD-402	DO
FAYETTEVILLE PUMP NO. 2 HIGH TEMPERATURE	42-AFD-402	DI
FAYETTEVILLE PUMP NO. 2 DISCHARGE CHECK VALVE OPEN	ZIO 402	DI

BLACK & VEATCH

Black & Veatch Corporation
Kansas City, Missouri

olsson

THIS DOCUMENT WAS ORIGINALLY ISSUED AND SEALED ON JANUARY 24, 2023 BY BRIAN L. BUTLER, A LICENSED PROFESSIONAL ENGINEER IN THE STATE OF ARKANSAS, E-11777

BEAVER WATER DISTRICT

WESTERN CORRIDOR PUMP STATION

100% SET

REVISIONS AND RECORD OF ISSUE

DESIGNED:	GKK
DETAILED:	PVR
CHECKED:	MJP, ACF
APPROVED:	BLB
DATE:	JANUARY 24, 2023
PROJECT NO.:	405654

GENERAL

SHEET DISCIPLINE

INSTRUMENT INTERCONNECTION DIAGRAM SHEET 2 OF 4

I-00-606

149 OF 159

(SCALE BAR IS 4" AT FULL SCALE) 0 1/2 1 2 3 4

PLOTTED: 1/18/2023 2:11:34 PM
FILE: C:\USERS\MAL7913\APPDATA\LOCAL\AUTODESK\AUTOCAD PLANT 3D\COLLABORATION\CACHE\405654\PID DWG\I-00-606.DWG
D31-1000
D11000

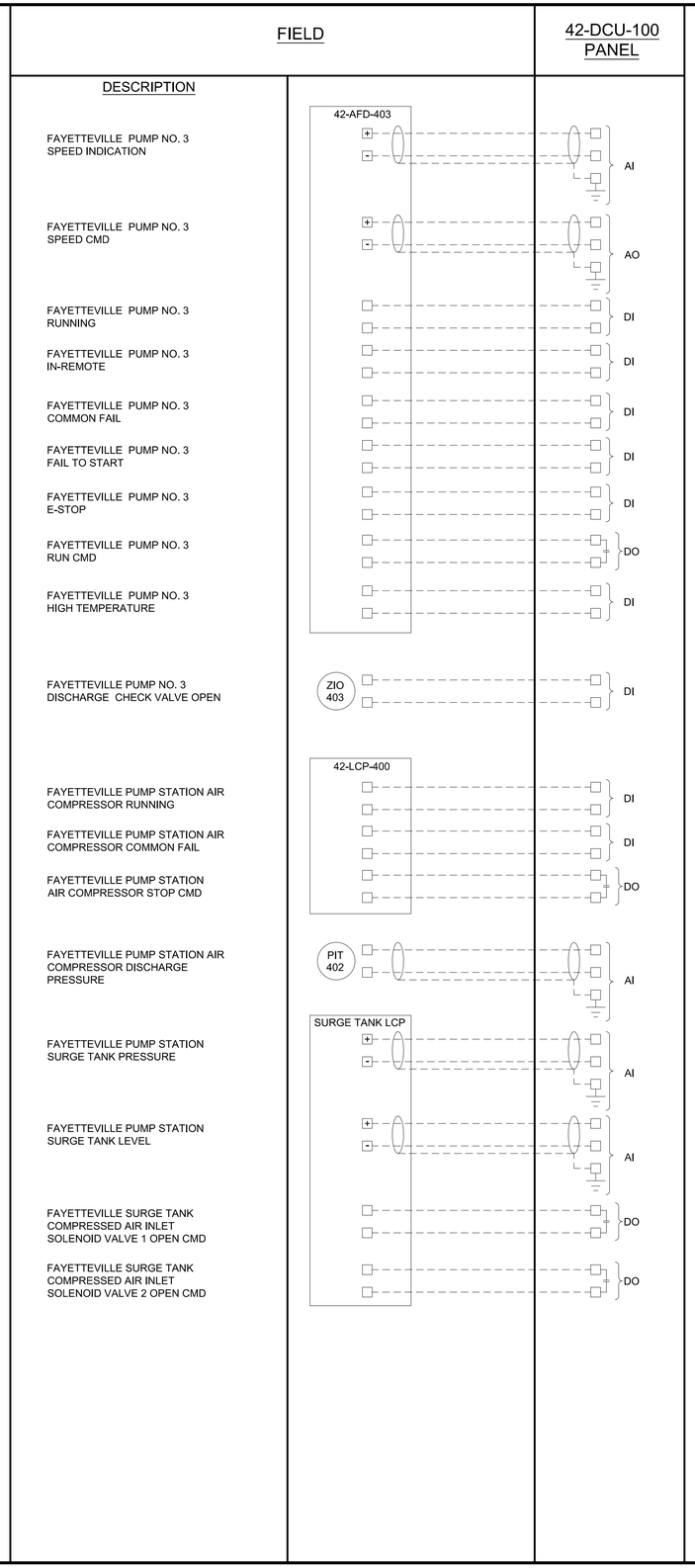

BLACK & VEATCH

Black & Veatch Corporation
Kansas City, Missouri

olsson

THIS DOCUMENT WAS ORIGINALLY ISSUED AND SEALED ON JANUARY 24, 2023 BY BRIAN L. BUTLER, A LICENSED PROFESSIONAL ENGINEER IN THE STATE OF ARKANSAS, E-11777

BEAVER WATER DISTRICT

WESTERN CORRIDOR PUMP STATION

100% SET

REVISIONS AND RECORD OF ISSUE

DESIGNED:	GKK
DETAILED:	VDM
CHECKED:	MJP, ACF
APPROVED:	BLB
DATE:	JANUARY 24, 2023
PROJECT NO.:	405654

GENERAL

SHEET DISCIPLINE

INSTRUMENT INTERCONNECTION DIAGRAM SHEET 3 OF 4

I-00-607

(SCALE BAR IS 4" AT FULL SCALE) 0 1/2 1 2 3 4

PLOTTED: 1/18/2023 2:12:40 PM
FILE: C:\USERS\MAL79137\APPDATA\LOCAL\AUTODESK\AUTOCAD PLANT 3D\COLLABORATION\CACHE\405654\PID DWG\I-00-607.DWG
FD11000
D11000

FIELD		43-RIO-100 PANEL
DESCRIPTION		
NATURAL GAS SUPPLY TO GENERATOR NO. 1 PRESSURE	PIT 101 (+/-)	AI
EG1 RADIATOR LCP COMMON ALARM	RADIATOR LCP 43-LCP-111	DI
EG1 RADIATOR JACKET WATER TANK LEVEL LOW		DI
EG1 RADIATOR AFTERCOOLER TANK LEVEL LOW		DI
NATURAL GAS SUPPLY TO GENERATOR NO. 2 PRESSURE	PIT 102 (+/-)	AI
EG2 RADIATOR LCP COMMON ALARM	RADIATOR LCP 43-LCP-121	DI
EG2 RADIATOR JACKET WATER TANK LEVEL LOW		DI
EG2 RADIATOR AFTERCOOLER TANK LEVEL LOW		DI
PUMP STATION 48VDC BATTERY CABINET NO. 1 HIGH H2 ALARM	43-LCP-101	DI
PUMP STATION 48VDC BATTERY CABINET NO. 4 HIGH H2 ALARM	43-LCP-104	DI
ELECTRICAL BUILDING AUTOMATIC TRANSFER SWITCH IN NORMAL MODE	43-ATS-1	DI
ELECTRICAL BUILDING AUTOMATIC TRANSFER SWITCH IN STANDBY MODE		DI
ELECTRICAL BUILDING AUTOMATIC TRANSFER SWITCH IN TROUBLE		DI

BLACK & VEATCH
Black & Veatch Corporation
Kansas City, Missouri

olsson

THIS DOCUMENT WAS ORIGINALLY ISSUED AND SEALED ON JANUARY 24, 2023 BY BRIAN L. BUTLER, A LICENSED PROFESSIONAL ENGINEER IN THE STATE OF ARKANSAS, E-11777

BEAVER WATER DISTRICT

WESTERN CORRIDOR PUMP STATION

100% SET

REVISIONS AND RECORD OF ISSUE

DESIGNED:	GKK
DETAILED:	VDM
CHECKED:	MJP, ACF
APPROVED:	BLB
DATE:	JANUARY 24, 2023
PROJECT NO.:	405654

GENERAL

INSTRUMENTATION

INSTRUMENT INTERCONNECTION DIAGRAM SHEET 4 OF 4

I-00-608

(SCALE BAR IS 4" AT FULL SCALE) 0 1/2 1 2 3 4

PLOTTED: 1/18/2023 2:17:13 PM
FILE: C:\USERS\MAL79137\APPDATA\LOCAL\AUTODESK\AUTOCAD PLANT 3D\COLLABORATION\CACHE\406654\PID DWGS\I-00-608.DWG
PT1000
PT1000

EXISTING DCS

42-DCU-100

PRESS PI 301 | FLOW FI 301 | CL2 AI 001 | FL AI 002 | TURB AI 003 | pH AI 004 | CLO2 AI 005 | PRESS PI 001

TYPICAL PUMP CHECK VALVE I/O: OPEN ZIO 301

TYPICAL PUMP AFD I/O: AUTO/MANUAL HC 301 | HIGH TEMP TAH 301 | IN REMOTE YI 301 | RUNNING YIR 301 | E-STOP YA 301 | COMMON FAIL UA 301 | FAIL TO START YA 301 | SPEED SI 301 | RUN CMD UCR 301 | SPEED CMD SC 301

TYPICAL VALVE ACTUATOR I/O: IN REMOTE YI 302 | FAULT YA 302 | OPEN ZIO 302 | CLOSED ZIC 302 | OPEN CMD ZCO 302 | CLOSE CMD ZCC 302

OWNER DETERMINED DIAGNOSTIC DATA

POWER MONITOR — 42-PM-001A (42-MCC-1 BUS A)

POWER MONITOR — 42-PM-001B (42-MCC-1 BUS B)

ETHERNET (CAT6)

4160V — SI 301 | HS 301 | LOR | SC 301 | HS 301A | E-STOP | YLR 301 | JIL 301 | YAL 301 | TAH 301 — 42-AFD-301 — NOTE 4

480V — HS 302 | LOR | HS 302A | OSC | ZIC 302 | ZIO 302 — 42-VBF-302 ACTUATOR

TYPICAL PUMP (TYPICAL OF 4)

TYPICAL VALVE ACTUATOR (TYPICAL OF 4)

42-LCP-001 — WATER QUALITY PANEL — 120V — AIT 001 CL2 | AIT 002 FL | AIT 003 TURB | AIT 004 pH | AIT 005 CLO2 | AE 001 CL2 | AE 002 FL | AE 003 TURB | AE 004 pH | AE 005 CLO2 | PG 001 | FG 001 | FG 002 | FG 003 | FG 004 | FG 005

1"-FW-SP

DRAIN

A I-42-605 — TO SURGE TANK LOCAL CONTROL PANEL

B I-42-605 — TO SURGE TANK LOCAL CONTROL PANEL

PIT 301 | FIT 301 | FE 301 M | 120V

BURIED PIPE | ABOVE GRADE

48"-FE-SP

DISCHARGE HEADER TO SPRINGDALE

42-VBF-314

36"-FW-SP

42-AVR-300

16"-FW-SP — 42-VBF-313

SEE TYPICAL AFD & PUMP RTD I/O | SEE TYPICAL VALVE ACTUATOR I/O | 20"-FW-SP | SEE TYPICAL OPEN VALVE I/O

(TYP OF 8 RTDs)

TE 304A | PG 304A | 42-VCK-304 | ZSO 304 | 42-VBF-312 | 42-VBF-311

PG 304 | 20"-TW-SP | 42-PSC-304 SPRINGDALE FUTURE PUMP NO 4 | 24"-TW-SP | 42-VBF-310

TE 303A | PG 303A | 42-VCK-303 | ZSO 303 | 42-VBF-309 | 42-VBF-308

PG 303 | 20"-TW-SP | 42-PSC-303 SPRINGDALE PUMP NO 3 | 24"-TW-SP | 42-VBF-307

TE 302A | PG 302A | 42-VCK-302 | ZSO 302 | 42-VBF-306 | 42-VBF-305

PG 302 | 20"-TW-SP | 42-PSC-302 SPRINGDALE PUMP NO 2 | 24"-TW-SP | 42-VBF-304

TE 301A | PG 301A | 42-VCK-301 | ZSO 301 | 42-VBF-303 | 42-VBF-302

PG 301 | 20"-TW-SP | 42-PSC-301 SPRINGDALE PUMP NO 1 | 24"-TW-SP | 42-VBF-301

A I-42-603 — TO SUCTION HEADER

B I-42-603 — TO SUCTION HEADER

A I-42-605 — FROM AIR COMPRESSOR

1"-CMS-SS-7

LIT 300 | LG 300 — SS VISUAL LEVEL GAUGE ASSEMBLY AND TRANSMITTER

SPRINGDALE SURGE TANK 42-TNK-300

PG 300 | PIT 300

PIT 001

36" MANWAY (TYP)

60 INCH SUCTION HEADERS FROM EXISTING WATER TREATMENT FACILITY

60"-TW-SP — 42-VBF-002 — 42-VBF-003 — 42-VBF-001

42-VBF-210 | 42-VBF-207 | 42-VBF-204 | 42-VBF-201

18"-TW-SP

A I-42-602 — TO FUTURE ROGERS PUMP NO 1

B I-42-602 — TO FUTURE ROGERS PUMP NO 2

C I-42-602 — TO FUTURE ROGERS PUMP NO 3

D I-42-602 — TO FUTURE ROGERS PUMP NO 4

NOTES:

1. SEE LEGEND AND ABBREVIATIONS ON DRAWINGS I-00-001, I-00-002 AND I-00-003.
2. SYSTEM CODE ON INSTRUMENTATION AND VALVES IS "PW" UNLESS OTHERWISE NOTED.
3. BUILDING CODE IS 42.
4. LOCAL CONTROL DEVICES, SUCH AS INDICATING LIGHTS AND SWITCHES, LOCATED ON MCCs OR AT EQUIPMENT, MAY NOT BE SHOWN.

(SCALE BAR IS 4" AT FULL SCALE) 0 1/2 1 2 3 4

PLOTTED: 1/19/2023 8:51:44 AM
FILE: C:\USERS\MAL7913\APPDATA\LOCAL\AUTODESK\AUTOCAD PLANT 3D\COLLABORATION\CACHE\405654\PID DWG\I-42-601.DWG
PD1000
PD1004

Black & Veatch Corporation
Kansas City, Missouri

olsson

THIS DOCUMENT WAS ORIGINALLY ISSUED AND SEALED ON JANUARY 24, 2023 BY BRIAN L. BUTLER, A LICENSED PROFESSIONAL ENGINEER IN THE STATE OF ARKANSAS, E-11777

BEAVER WATER DISTRICT

WESTERN CORRIDOR PUMP STATION

100% SET

REVISIONS AND RECORD OF ISSUE

DESIGNED:	GKK
DETAILED:	PVR
CHECKED:	MJP, ACF
APPROVED:	BLB
DATE:	JANUARY 24, 2023
PROJECT NO.:	405654

PUMP STATION

INSTRUMENTATION

P&ID - SPRINGDALE PUMPS

I-42-601

152 OF 159

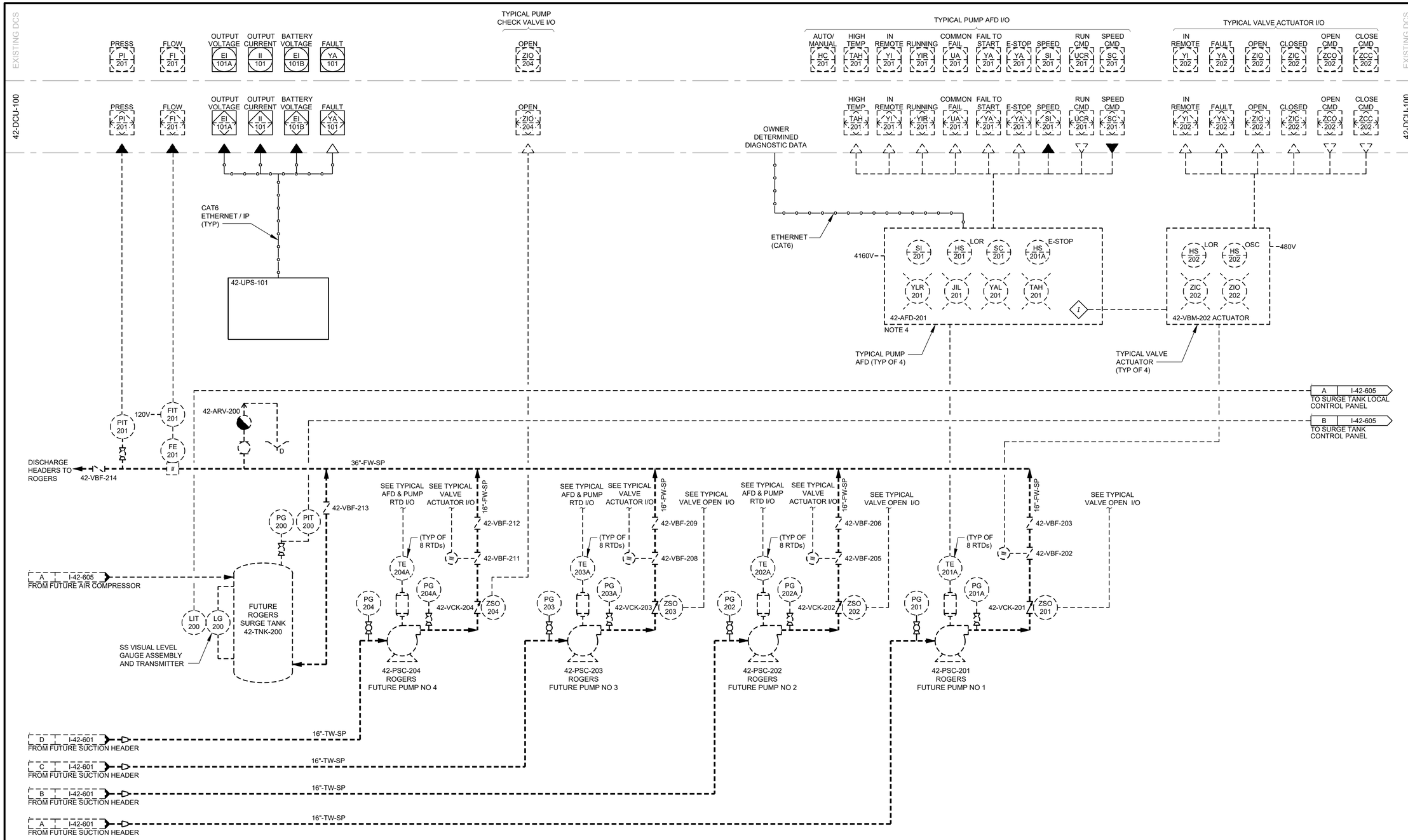

NOTES:

1. SEE LEGEND AND ABBREVIATIONS ON DRAWINGS I-00-001, I-00-002 AND I-00-003.
2. SYSTEM CODE ON INSTRUMENTATION AND VALVES IS "PW" UNLESS OTHERWISE NOTED.
3. BUILDING CODE IS 42.
4. LOCAL CONTROL DEVICES, SUCH AS INDICATING LIGHTS AND SWITCHES, LOCATED ON MCCs OR AT EQUIPMENT, MAY NOT BE SHOWN.

PLOTTED: 1/18/2023 2:25:31 PM
FILE: C:\USERS\MAL79137\APPDATA\LOCAL\AUTODESK\AUTOCAD PLANT 3D\COLLABORATION\CACHE\405654\PID DWG\I-42-602.DWG
FD11000
D11000

(SCALE BAR IS 4" AT FULL SCALE) 0 1/2 1 2 3 4

BLACK & VEATCH
Black & Veatch Corporation
Kansas City, Missouri

olsson

THIS DOCUMENT WAS ORIGINALLY ISSUED AND SEALED ON JANUARY 24, 2023 BY BRIAN L. BUTLER, A LICENSED PROFESSIONAL ENGINEER IN THE STATE OF ARKANSAS, E-11777

BEAVER WATER DISTRICT

WESTERN CORRIDOR PUMP STATION

100% SET

REVISIONS AND RECORD OF ISSUE

DESIGNED:	GKK
DETAILED:	PVR
CHECKED:	MJP, ACF
APPROVED:	BLB
DATE:	JANUARY 24, 2023
PROJECT NO.:	405654

PUMP STATION

INSTRUMENTATION

P&ID - ROGERS PUMPS (FUTURE)

I-42-602

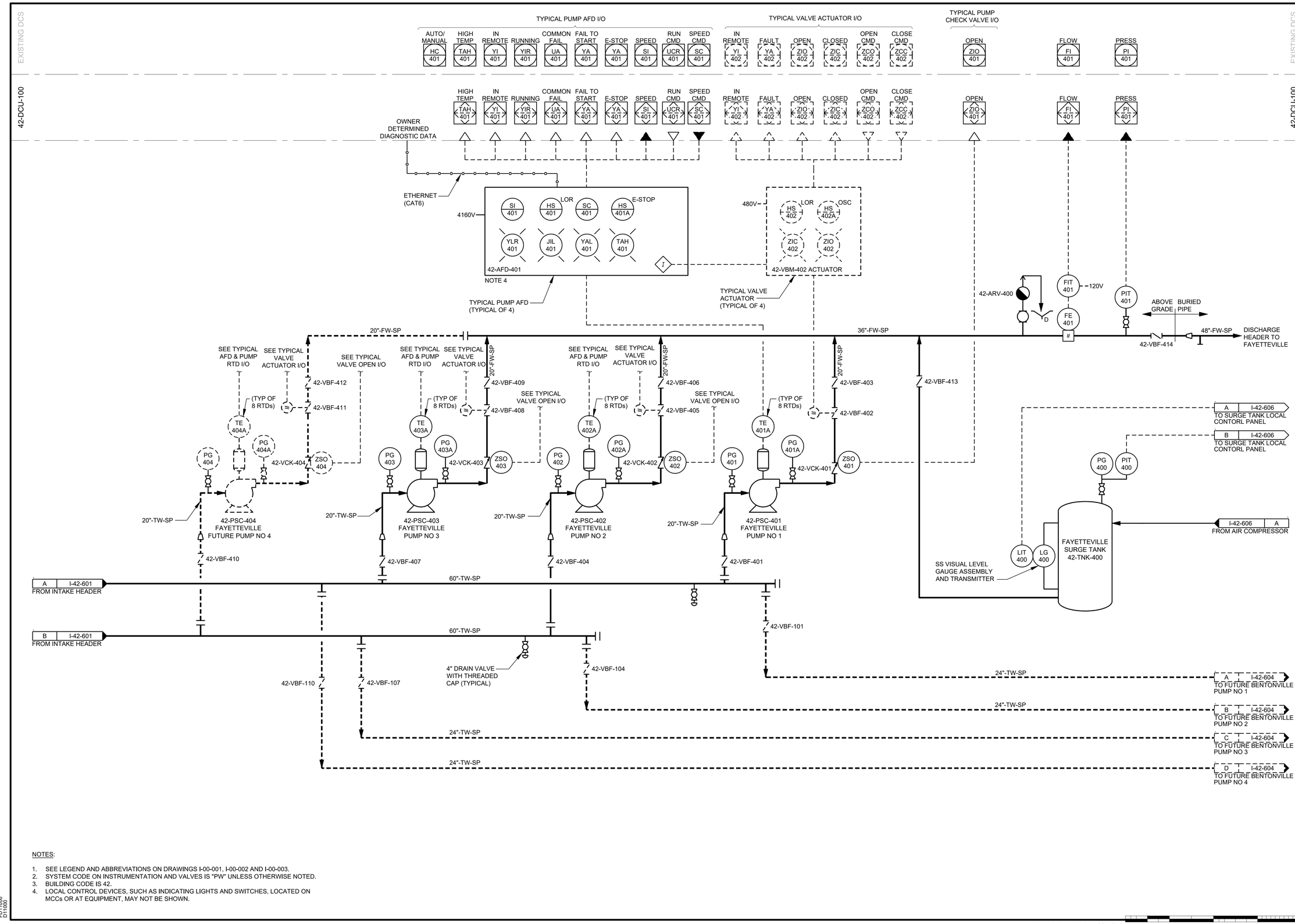

NOTES:

1. SEE LEGEND AND ABBREVIATIONS ON DRAWINGS I-00-001, I-00-002 AND I-00-003.
2. SYSTEM CODE ON INSTRUMENTATION AND VALVES IS "PW" UNLESS OTHERWISE NOTED.
3. BUILDING CODE IS 42.
4. LOCAL CONTROL DEVICES, SUCH AS INDICATING LIGHTS AND SWITCHES, LOCATED ON MCCs OR AT EQUIPMENT, MAY NOT BE SHOWN.

PLOTTED: 1/19/2023 8:59:10 AM
FILE: C:\USERS\MAL79137\APPDATA\LOCAL\AUTODESK\AUTOCAD PLANT 3D\COLLABORATION\CACHE\405654\PID DWG\I-42-603.DWG
FD11000
D11000

BLACK & VEATCH
Black & Veatch Corporation
Kansas City, Missouri

olsson

THIS DOCUMENT WAS ORIGINALLY ISSUED AND SEALED ON JANUARY 24, 2023 BY BRIAN L. BUTLER, A LICENSED PROFESSIONAL ENGINEER IN THE STATE OF ARKANSAS, E-11777

BEAVER WATER DISTRICT

WESTERN CORRIDOR PUMP STATION

100% SET

REVISIONS AND RECORD OF ISSUE

DESIGNED:	GKK
DETAILED:	PVR
CHECKED:	MJP, ACF
APPROVED:	BLB
DATE:	JANUARY 24, 2023
PROJECT NO.:	405654

PUMP STATION

INSTRUMENTATION

P&ID - FAYETTEVILLE PUMPS

I-42-603

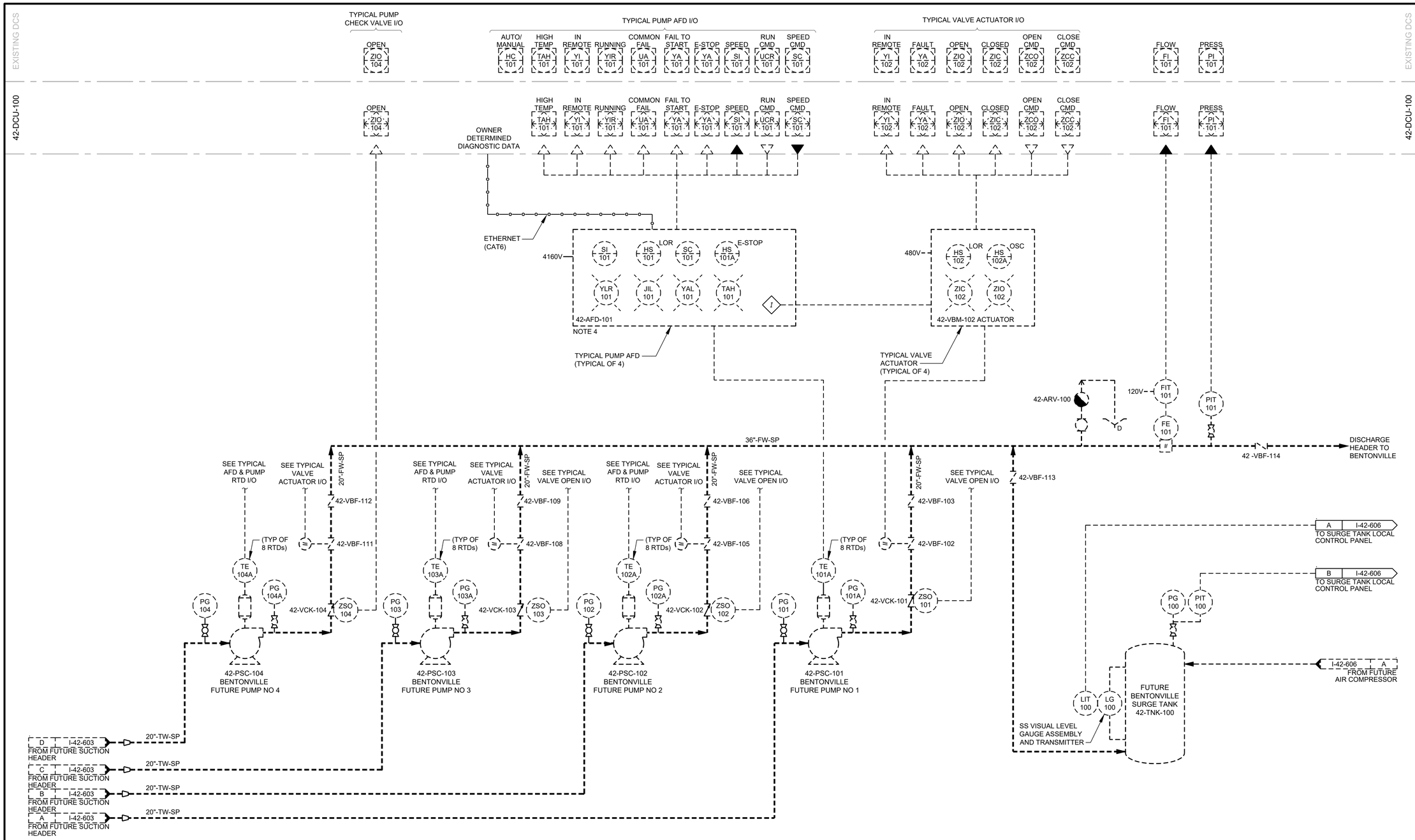

NOTES:

1. SEE LEGEND AND ABBREVIATIONS ON DRAWINGS I-00-001, I-00-002 AND I-00-003.
2. SYSTEM CODE ON INSTRUMENTATION AND VALVES IS "PW" UNLESS OTHERWISE NOTED.
3. BUILDING CODE IS 42.
4. LOCAL CONTROL DEVICES, SUCH AS INDICATING LIGHTS AND SWITCHES, LOCATED ON MCCs OR AT EQUIPMENT, MAY NOT BE SHOWN.

(SCALE BAR IS 4" AT FULL SCALE) 0 1/2 1 2 3 4

BLACK & VEATCH

Black & Veatch Corporation
Kansas City, Missouri

olsson

THIS DOCUMENT WAS ORIGINALLY ISSUED AND SEALED ON JANUARY 24, 2023 BY BRIAN L. BUTLER, A LICENSED PROFESSIONAL ENGINEER IN THE STATE OF ARKANSAS, E-11777

BEAVER WATER DISTRICT

WESTERN CORRIDOR PUMP STATION

100% SET

REVISIONS AND RECORD OF ISSUE

DESIGNED:	GKK
DETAILED:	PVR
CHECKED:	MJP, ACF
APPROVED:	BLB
DATE:	JANUARY 24, 2023
PROJECT NO.:	405654

PUMP STATION

INSTRUMENTATION

P&ID - BENTONVILLE PUMPS (FUTURE)

I-42-604

PLOTTED: 1/18/2023 2:28:17 PM
FILE: C:\USERS\MAL79137\APPDATA\LOCAL\AUTODESK\AUTOCAD PLANT 3D\COLLABORATION\CACHE\405654\PID DWG\I-42-604.DWG
FD11000
D11000

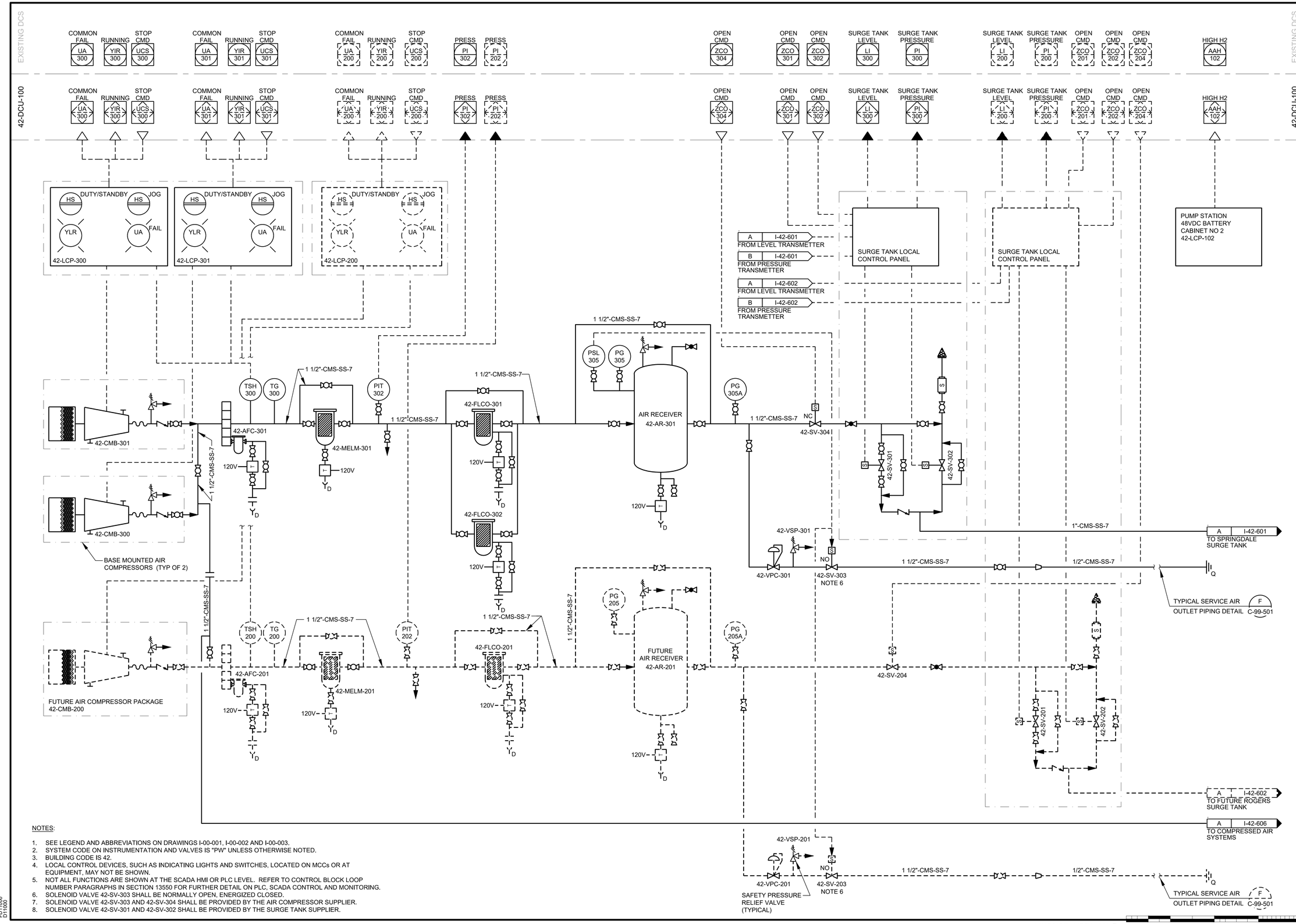

NOTES:

1. SEE LEGEND AND ABBREVIATIONS ON DRAWINGS I-00-001, I-00-002 AND I-00-003.
2. SYSTEM CODE ON INSTRUMENTATION AND VALVES IS "PW" UNLESS OTHERWISE NOTED.
3. BUILDING CODE IS 42.
4. LOCAL CONTROL DEVICES, SUCH AS INDICATING LIGHTS AND SWITCHES, LOCATED ON MCCs OR AT EQUIPMENT, MAY NOT BE SHOWN.
5. NOT ALL FUNCTIONS ARE SHOWN AT THE SCADA HMI OR PLC LEVEL. REFER TO CONTROL BLOCK LOOP NUMBER PARAGRAPHS IN SECTION 13550 FOR FURTHER DETAIL ON PLC, SCADA CONTROL AND MONITORING.
6. SOLENOID VALVE 42-SV-303 SHALL BE NORMALLY OPEN, ENERGIZED CLOSED.
7. SOLENOID VALVE 42-SV-303 AND 42-SV-304 SHALL BE PROVIDED BY THE AIR COMPRESSOR SUPPLIER.
8. SOLENOID VALVE 42-SV-301 AND 42-SV-302 SHALL BE PROVIDED BY THE SURGE TANK SUPPLIER.

PLOTTED: 1/18/2023 2:29:35 PM
FILE: C:\USERS\MAL79137\APPDATA\LOCAL\AUTODESK\AUTOCAD PLANT 3D\COLLABORATION\CACHE\405654\PID DWG\I-42-605.DWG
FD11000
D11000

BLACK & VEATCH
Black & Veatch Corporation
Kansas City, Missouri

olsson

THIS DOCUMENT WAS ORIGINALLY ISSUED AND SEALED ON JANUARY 24, 2023 BY BRIAN L. BUTLER, A LICENSED PROFESSIONAL ENGINEER IN THE STATE OF ARKANSAS, E-11777

BEAVER WATER DISTRICT

WESTERN CORRIDOR PUMP STATION

100% SET

REVISIONS AND RECORD OF ISSUE

DESIGNED:	GKK
DETAILED:	PVR
CHECKED:	MJP, ACF
APPROVED:	BLB
DATE:	JANUARY 24, 2023
PROJECT NO.:	405654

PUMP STATION

INSTRUMENTAION

P&ID - SPRINGDALE AND ROGERS (FUTURE) COMPRESSED AIR

I-42-605

156 OF 159

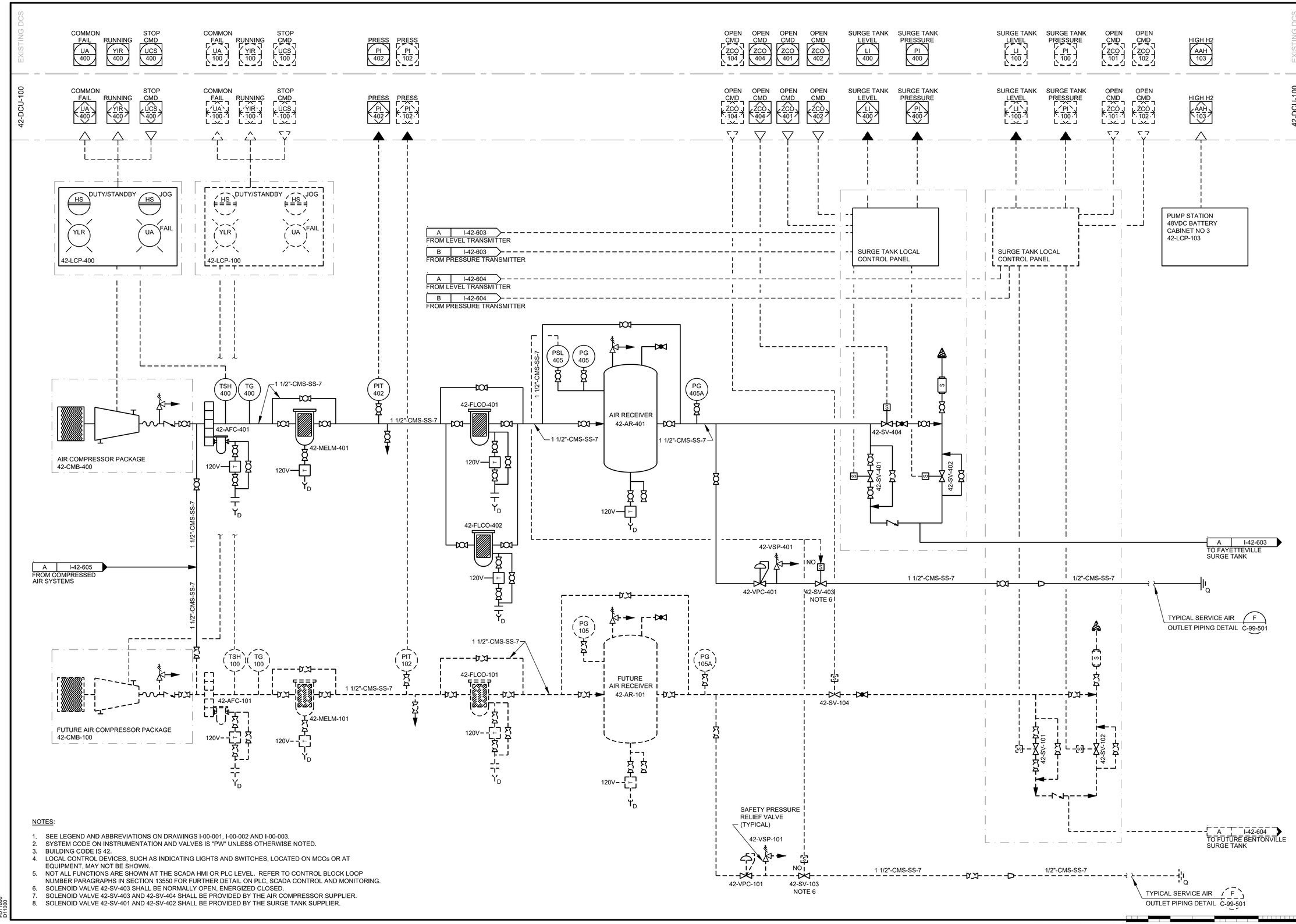

NOTES:

1. SEE LEGEND AND ABBREVIATIONS ON DRAWINGS I-00-001, I-00-002 AND I-00-003.
2. SYSTEM CODE ON INSTRUMENTATION AND VALVES IS "PW" UNLESS OTHERWISE NOTED.
3. BUILDING CODE IS 42.
4. LOCAL CONTROL DEVICES, SUCH AS INDICATING LIGHTS AND SWITCHES, LOCATED ON MCCs OR AT EQUIPMENT, MAY NOT BE SHOWN.
5. NOT ALL FUNCTIONS ARE SHOWN AT THE SCADA HMI OR PLC LEVEL. REFER TO CONTROL BLOCK LOOP NUMBER PARAGRAPHS IN SECTION 13550 FOR FURTHER DETAIL ON PLC, SCADA CONTROL AND MONITORING.
6. SOLENOID VALVE 42-SV-403 SHALL BE NORMALLY OPEN, ENERGIZED CLOSED.
7. SOLENOID VALVE 42-SV-403 AND 42-SV-404 SHALL BE PROVIDED BY THE AIR COMPRESSOR SUPPLIER.
8. SOLENOID VALVE 42-SV-401 AND 42-SV-402 SHALL BE PROVIDED BY THE SURGE TANK SUPPLIER.

(SCALE BAR IS 4" AT FULL SCALE) 0 1/2 1 2 3 4

PLOTTED: 1/18/2023 2:32:29 PM
FILE: C:\USERS\MAL79137\APPDATA\LOCAL\AUTODESK\AUTOCAD PLANT 3D\COLLABORATION\CACHE\405654\PID DWG\I-42-606.DWG
FD11000
D11000

BLACK & VEATCH
Black & Veatch Corporation
Kansas City, Missouri

olsson

THIS DOCUMENT WAS ORIGINALLY ISSUED AND SEALED ON JANUARY 24, 2023 BY BRIAN L. BUTLER, A LICENSED PROFESSIONAL ENGINEER IN THE STATE OF ARKANSAS, E-11777

BEAVER WATER DISTRICT

WESTERN CORRIDOR PUMP STATION

100% SET

REVISIONS AND RECORD OF ISSUE

DESIGNED:	GKK
DETAILED:	PVR
CHECKED:	MJP, ACF
APPROVED:	BLB
DATE:	JANUARY 24, 2023
PROJECT NO.:	405654

PUMP STATION

INSTRUMENTATION

P&ID - FAYETTEVILLE AND BENTONVILLE COMPRESSED AIR (FUTURE)

I-42-606

157 OF 159

EXISTING DCS

HIGH H2 AAH 101	HIGH H2 AAH 104	PRESS PI 101	NORMAL YI 101	STANDBY YA 101	TROUBLE UA 101	COMMON ALARM YA 111	JACKET WATER LEVEL LOW LA 101	AFTERCOOLER LEVEL LOW LA 102

POWER FACTOR JI 113	COOL TEMP TI 101	VOLTAGE EI 101	VOLT AMPS JI 111	FREQ SI 111	POWER JI 112	SPEED SI 112	OIL PRESS PI 101	FAULT YA 113	GENERAL WARNING YA 111	IN REMOTE YI 101	LO OIL PRESS PAL 101	HI COOL TEMP TAH 101	OVER SPEED SAH 101	OVER CRANK YA 112	E-STOP YA 114	LO BATTERY JAL 101	RUNNING YIR 101	BATTERY ALARM JA 101	RUN CMD UCR 101	ISO MODE UC 111A	DROOP MODE UC 111B

43-RIO-100

(CONTINUED ON I-43-602)

ENGINE-GENERATOR MASTER CONTROL PANEL 43-MCP-100

CAT6 ETHERNET/IP

CAT6 ETHERNET/IP

NOTE 7

ELECTRICAL BUILDING 48VDC BATTERY CABINET NO 1 43-LCP-101

ELECTRICAL BUILDING 48VDC BATTERY CABINET NO 4 43-LCP-104

ELECTRICAL BUILDING AUTOMATIC TRANSFER SWITCH 43-ATS-1

RADIATOR LOCAL CONTROL PANEL 43-LCP-111

VENT TO EXTERIOR NOTE 8

ENGINE-GENERATOR LOCAL CONTROL PANEL 43-LCP-101

REMOTE EMERGENCY SHUTDOWN SWITCH ESTOP HS 101

EXHAUST SILENCER

ENGINE EXHAUST

PIT 101

BURIED PIPE

ABOVE GRADE

EXCESS FLOW VALVE (TYP)

FLAME ARRESTOR

PG 101

PG 102

NATURAL GAS SUPPLY

4"-NG-PE

4"-NG-CS-3

43-VPL-101

43-VSL-101

43-VSL-102

ENGINE GENERATOR NO 1 43-EG-101

GAS METER BY GAS COMPANY

DRIP LEG

LEAK TEST WITH CAP (TYP OF 2)

OIL DRAIN CONNECTION

JACKET WATER HEATER

BURIED PIPE

ABOVE GRADE

4"-NG-CS-3

43-VPL-102

A

I-43-602

TO ENGINE GENERATOR NO 2

PACKAGE PROVIDED BY THE ENGINE GENERATOR SUPPLIER (TYP) NOTE 6

SHUTOFF VALVE

43-VPL-103

NOTE 14

RADIATOR SKID

LSL 101

JACKET WATER EXPANSION TANK NOTE 11

LSL 102

AFTERCOOLER EXPANSION TANK NOTE 11

ENGINE-GENERATOR ENCLOSURE OUTLINE

TG 101

PG 103

JACKET WATER CORE

6"-COLW-CS-3

43-VBF-001

JACKET WATER LOOP

DRAIN WITH SHUTOFF VALVE

TG 102

PG 104

43-PCL-101 NOTE 13

6"-COLW-CS-3

43-VBF-002

TG 103

PG 105

4"-COLW-CS-3

43-VBF-003

AFTERCOOLER WATER CORE

AFTERCOOLER WATER LOOP

DRAIN WITH SHUTOFF VALVE

TG 104

PG 106

43-PCL-102 NOTE 13

4"-COLW-CS-3

43-VBF-004

AFTERCOOLER

NOTE 12

43-FAN-101

REMOTE RADIATOR PACKAGE

NOTES:

1. REFER TO LEGEND AND ABBREVIATIONS ON DRAWINGS I-00-001, I-00-002 AND I-00-003.
2. BUILDING CODE IS 43 UNLESS OTHERWISE NOTED.
3. PROCESS CODE IS NG, UNLESS OTHERWISE NOTED.
4. ENGINE GENERATOR SUPPLIER SHALL PROVIDE A LIST OF RECOMMENDED MONITORING AND CONTROL POINTS AVAILABLE OVER THE COMMUNICATION LINK FROM THE ENGINE GENERATOR MASTER CONTROL PANEL. THESE POINTS SHALL BE COMMUNICATED TO AND FROM THE OWNERS SCADA SYSTEM AND DISPLAYED ON THE CORRESPONDING ENGINE GENERATOR HMI.
5. THE SAME LEVEL OF CONTROL THAT IS AVAILABLE FROM THE MASTER CONTROL PANEL SHALL BE AVAILABLE FROM THE OWNERS SCADA AND SHALL BE COORDINATED WITH THE SYSTEM INTEGRATOR.
6. PACKAGE PROVIDED BY THE ENGINE GENERATOR SUPPLIER.
7. THE ENGINE GENERATOR SHALL BE INTERLOCKED WITH ITS RESPECTIVE HVAC LOUVER SUCH THAT THE LOUVER RESPONSIBLE FOR COMBUSTION AIR OPENS PRIOR TO INITIATING THE START OF THE ENGINE GENERATOR. THE ENGINE GENERATOR CONTROL PANEL SHALL NOT START THE ENGINE UNTIL POSITIVE FEEDBACK IS RECEIVED THAT THE LOUVER IS OPEN. IF THE LOUVER CLOSES DURING OPERATION THE ENGINE SHALL BE SHUT DOWN.
8. EXTEND PRESSURE RELIEF VENT UP TO ABOVE ROOF LINE AND TERMINATE WITH GOOSENECK FITTING A MINIMUM OF 15 FEET FROM THE NEAREST LOUVER OPENING.
9. VALVE/DEVICE FURNISHED BY ENGINE GENERATOR SUPPLIER FOR INSTALLATION BY CONTRACTOR. ALL PIPING SHALL BE BY CONTRACTOR. CONFIGURATION OF VALVE/DEVICE WITHIN PIPING SYSTEM SHALL BE ACCEPTABLE TO EQUIPMENT MANUFACTURER, ENGINEER AND OWNER. AT A MINIMUM DEVICES SHALL BE INSTALLED TO BE EASILY ACCESSIBLE FROM THE OPERATING FLOOR LEVEL.
10. CONTRACTOR SHALL BE RESPONSIBLE FOR PROVIDED AND INSTALLING ALL FLEXIBLE CONNECTORS AND EXPANSION JOINTS.
11. REMOTE RADIATOR EXPANSION TANKS TO BE LOCATED AT THE HIGHEST ELEVATION OF PIPING SYSTEM.
12. REMOTE RADIATOR MAY REQUIRE ADDITIONAL FANS OR MOTORS THAN SHOWN TO MEET SPECIFICATION REQUIREMENTS.
13. REQUIRED THERMOSTATIC CONTROL AND BYPASS LINE COOLING WATER PUMPS NOT SHOWN.
14. CAPPED END FOR CONNECTION TO FUTURE GENERATORS.
15. INSULATION NOT SHOWN FOR CLARITY.
16. REMOTE RADIATOR SHOWN, UNIT MOUNTED RADIATOR NOT SHOWN FOR CLARITY.

(SCALE BAR IS 4" AT FULL SCALE) 0 1/2 1 2 3 4

PLOTTED: 1/18/2023 2:35:11 PM
FILE: C:\USERS\MAL79137\APPDATA\LOCAL\AUTODESK\AUTOCAD PLANT 3D\COLLABORATION\CACHE\406654\PID DWG\I-43-601.DWG
D11000
D11000

EXISTING DCS

43-RIO-100

Black & Veatch Corporation
Kansas City, Missouri

olsson

THIS DOCUMENT WAS ORIGINALLY ISSUED AND SEALED ON JANUARY 24, 2023 BY BRIAN L. BUTLER, A LICENSED PROFESSIONAL ENGINEER IN THE STATE OF ARKANSAS, E-11777

BEAVER WATER DISTRICT

WESTERN CORRIDOR PUMP STATION

100% SET

REVISIONS AND RECORD OF ISSUE	
DESIGNED:	GKK
DETAILED:	PVR
CHECKED:	MJP, ACF
APPROVED:	BLB
DATE:	JANUARY 24, 2023
PROJECT NO.:	405654

ENGINE-GENERATORS

INSTRUMENTATION

P&ID - GENERATOR NO 1

I-43-601

158 OF 159

EXISTING DCS

43-RIO-100

PRESS PI 102 | OUTPUT VOLTAGE EI 101A | OUTPUT CURRENT II 101 | BATTERY VOLTAGE EI 101B | FAULT YA 101 | COMMON ALARM YA 121 | JACKET WATER LEVEL LOW LA 103 | AFTERCOOLER LEVEL LOW LA 104 | POWER FACTOR JI 123 | COOL TEMP TI 102 | VOLTAGE EI 102 | VOLT AMPS JI 121 | FREQ SI 121 | POWER JI 122 | SPEED SI 122 | OIL PRESS PI 102 | FAULT YA 123 | GENERAL WARNING YA 121 | IN REMOTE YI 102 | LO OIL PRESS PAL 102 | HI COOL TEMP TAH 102 | OVER SPEED SAH 102 | OVER CRANK YA 122 | E-STOP YA 124 | LO BATTERY JAL 102 | RUNNING YIR 102 | BATTERY ALARM JA 102 | RUN CMD UCR 102 | ISO MODE UC 121A | DROOP MODE UC 121B

EXISTING DCS

43-RIO-100

PRESS PI 102 | OUTPUT VOLTAGE EI 101A | OUTPUT CURRENT II 101 | BATTERY VOLTAGE EI 101B | FAULT YA 101 | COMMON ALARM YA 121 | JACKET WATER LEVEL LOW LA 103 | AFTERCOOLER LEVEL LOW LA 104 | POWER FACTOR JI 123 | COOL TEMP TI 102 | VOLTAGE EI 102 | VOLT AMPS JI 121 | FREQ SI 121 | POWER JI 122 | SPEED SI 122 | OIL PRESS PI 102 | FAULT YA 123 | GENERAL WARNING YA 121 | IN REMOTE YI 102 | LO OIL PRESS PAL 102 | HI COOL TEMP TAH 102 | OVER SPEED SAH 102 | OVER CRANK YA 122 | E-STOP YA 124 | LO BATTERY JAL 102 | RUNNING YIR 102 | BATTERY ALARM JA 102 | RUN CMD UCR 102 | ISO MODE UC 121A | DROOP MODE UC 121B

CAT6 ETHERNET / IP (TYP)

CAT6 ETHERNET / IP

43-UPS-101

RADIATOR LOCAL CONTROL PANEL
43-LCP-121

ENGINE-GENERATOR MASTER CONTROL PANEL
43-MCP-100

(CONTINUED FROM I-43-601)

NOTE 7

CAT6 ETHERNET/IP

ENGINE-GENERATOR LOCAL CONTROL PANEL
43-LCP-102

REMOTE EMERGENCY SHUTDOWN SWITCH ESTOP
HS 102

VENT TO EXTERIOR
NOTE 8

EXHAUST SILENCER

S

ENGINE EXHAUST

PIT 102

PG 107

PG 108

A | I-43-601
NATURAL GAS FROM ENGINE GENERATOR NO 1

4"-NG-CS-3

EXCESS FLOW VALVE (TYP)

DRIP LEG
FLAME ARRESTOR

43-VSL-103

43-VSL-104

LEAK TEST WITH CAP (TYP OF 2)

ENGINE GENERATOR NO 2
43-EG-102

OIL DRAIN CONNECTION

JACKET WATER HEATER

NOTE 6

COOLING DRAIN (TYPICAL)

LSL 103

JACKET WATER EXPANSION TANK
NOTE 11

LSL 104

AFTERCOOLER EXPANSION TANK
NOTE 11

ENGINE-GENERATOR ENCLOSURE OUTLINE

TG 105 | PG 109

6"-COLW-CS-3

JACKET WATER CORE

43-VBF-005

TG 106 | PG 110

JACKET WATER LOOP

DRAIN WITH SHUTOFF VALVE

6"-COLW-CS-3

43-PCL-103
NOTE 13

43-VBF-006

TG 107 | PG 111

4"-COLW-CS-3

AFTERCOOLER WATER CORE

43-VBF-007

AFTERCOOLER WATER LOOP

DRAIN WITH SHUTOFF VALVE

TG 108 | PG 112

4"-COLW-CS-3

43-PCL-104
NOTE 13

43-VBF-008

AFTERCOOLER

NOTE 12

43-FAN-102

REMOTE RADIATOR PACKAGE

NOTES:

1. REFER TO LEGEND AND ABBREVIATIONS ON DRAWINGS I-00-001, I-00-002 AND I-00-003.
2. BUILDING CODE IS 43 UNLESS OTHERWISE NOTED.
3. PROCESS CODE IS NG, UNLESS OTHERWISE NOTED.
4. ENGINE GENERATOR SUPPLIER SHALL PROVIDE A LIST OF RECOMMENDED MONITORING AND CONTROL POINTS AVAILABLE OVER THE COMMUNICATION LINK FROM THE ENGINE GENERATOR MASTER CONTROL PANEL. THESE POINTS SHALL BE COMMUNICATED TO AND FROM THE OWNERS SCADA SYSTEM AND DISPLAYED ON THE CORRESPONDING ENGINE GENERATOR HMI.
5. THE SAME LEVEL OF CONTROL THAT IS AVAILABLE FROM THE MASTER CONTROL PANEL SHALL BE AVAILABLE FROM THE OWNERS SCADA AND SHALL BE COORDINATED WITH THE SYSTEM INTEGRATOR.
6. PACKAGE PROVIDED BY THE ENGINE GENERATOR SUPPLIER.
7. THE ENGINE GENERATOR SHALL BE INTERLOCKED WITH ITS RESPECTIVE HVAC LOUVER SUCH THAT THE LOUVER RESPONSIBLE FOR COMBUSTION AIR OPENS PRIOR TO INITIATING THE START OF THE ENGINE GENERATOR. THE ENGINE GENERATOR CONTROL PANEL SHALL NOT START THE ENGINE UNTIL POSITIVE FEEDBACK IS RECEIVED THAT THE LOUVER IS OPEN. IF THE LOUVER CLOSES DURING OPERATION THE ENGINE SHALL BE SHUT DOWN.
8. EXTEND PRESSURE RELIEF VENT UP TO ABOVE ROOF LINE AND TERMINATE WITH GOOSENECK FITTING A MINIMUM OF 15 FEET FROM THE NEAREST LOUVER OPENING.
9. VALVE/DEVICE FURNISHED BY ENGINE GENERATOR SUPPLIER FOR INSTALLATION BY CONTRACTOR. ALL PIPING SHALL BE BY CONTRACTOR. CONFIGURATION OF VALVE/DEVICE WITHIN PIPING SYSTEM SHALL BE ACCEPTABLE TO EQUIPMENT MANUFACTURER, ENGINEER AND OWNER. AT A MINIMUM DEVICES SHALL BE INSTALLED TO BE EASILY ACCESSIBLE FROM THE OPERATING FLOOR LEVEL.
10. CONTRACTOR SHALL BE RESPONSIBLE FOR PROVIDED AND INSTALLING ALL FLEXIBLE CONNECTORS AND EXPANSION JOINTS.
11. REMOTE RADIATOR EXPANSION TANKS TO BE LOCATED AT THE HIGHEST ELEVATION OF PIPING SYSTEM.
12. REMOTE RADIATOR MAY REQUIRE ADDITIONAL FANS OR MOTORS THAN SHOWN TO MEET SPECIFICATION REQUIREMENTS.
13. REQUIRED THERMOSTATIC CONTROL AND BYPASS LINE COOLING WATER PUMPS NOT SHOWN.
14. INSULATION NOT SHOWN FOR CLARITY.
15. REMOTE RADIATOR SHOWN, UNIT MOUNTED RADIATOR NOT SHOWN FOR CLARITY.

(SCALE BAR IS 4" AT FULL SCALE) 0 1/2 1 2 3 4

PLOTTED: 1/18/2023 2:36:19 PM
FILE: C:\USERS\MAL79137\APPDATA\LOCAL\AUTODESK\AUTOCAD PLANT 3D\COLLABORATIONCACHE\405654\PID DWG\I-43-602.DWG
FSTYLE000
DTD002

BLACK & VEATCH
Black & Veatch Corporation
Kansas City, Missouri

olsson

THIS DOCUMENT WAS ORIGINALLY ISSUED AND SEALED ON JANUARY 24, 2023 BY BRIAN L. BUTLER, A LICENSED PROFESSIONAL ENGINEER IN THE STATE OF ARKANSAS, E-11777

BEAVER WATER DISTRICT

WESTERN CORRIDOR PUMP STATION

100% SET

REVISIONS AND RECORD OF ISSUE

DESIGNED:	GKK
DETAILED:	PVR
CHECKED:	MJP, ACF
APPROVED:	BLB
DATE:	JANUARY 24, 2023
PROJECT NO.:	405654

ENGINE-GENERATORS

INSTRUMENTATION

P&ID - GENERATOR NO 2

I-43-602

159 OF 159

PLANS FOR

WEST MILLER ROAD IMPROVEMENTS

CITY OF SPRINGDALE, WASHINGTON COUNTY, ARKANSAS

LEGEND

CTL	SURVEY CONTROL POINT	TB	TRAFFIC SIGNAL BOX
	SURVEY BENCHMARK	TM	TRAFFIC SIGNAL MANHOLE
TBM	SURVEY TEMPORARY BEMCHMARK		TRAFFIC SIGNAL POLE W/ ARM
GM	GAS METER		TRAFFIC SIGNAL POLE
GAR	GAS RISER	TC	TRAFFIC SIGNAL CONTROL BOX
	GAS MANHOLE	TS	TRAFFIC SIGNAL PEDESTAL
GR	GAS REGULATOR		ELECTRIC MANHOLE
TVP	TELEVISION PEDESTAL	EM	ELECTRIC METER
F	FIBER BOX	ER	ELECTRIC RISER
	FIBER PEDESTAL	E	ELECTRIC BOX
C	CABLE BOX		ELECTRIC CABINET
CV	CABLE VAULT	J	ELECTRIC JUNCTION BOX
TP	TELEPHONE PEDESTAL	SPH	SPRINKLER HEAD
	STORM MANHOLE	SCV	SPRINKLER CONTROL VALVE
	STORM GRATE		WATER METER PIT
S	SANITARY MANHOLE		FIRE HYDRANT
YL	YARD LIGHT	WM	WATER METER
LTP	LIGHT POLE	WV	WATER VALVE
	POWER POLE	FP	FLAG POLE
LPPP	POWER POLE W/ LIGHT		SIGN
	GUY WIRE		BOLLARD
	STUMP		WOOD POST
BU	BUSH		STEEL POST
	EVERGREEN TREE	COL	COLUMN
	DECIDUOUS TREE		BORE HOLE

PL	PROPERTY LINE
ROW	RIGHT-OF-WAY LINE
	CENTER LINE
	PERMANENT EASEMENT
	TEMPORARY CONSTRUCTION EASEMENT
1370	EXISTING CONTOUR
1371	EXISTING CONTOUR
SS	EXISTING SANITARY LINE
SD	EXISTING STORM LINE
G	EXISTING GAS LINE
W	EXISTING WATER LINE
P-UG	EXISTING UNDERGROUND POWER
T	EXISTING UNDERGROUND TRAFFIC
P-OH	EXISTING OVERHEAD ELECTRIC
TEL	EXISTING UNDERGROUND TELEPHONE
CATV	EXISTING UNDERGROUND CABLE/TV
FO	EXISTING UNDERGROUND FIBER OPTIC
TEL-OH	EXISTING OVERHEAD TELEPHONE
CATV-OH	EXISTING OVERHEAD CABLE/TV
X	WOVEN WIRE FENCE
	CHAIN LINK OR METAL FENCE
	WOOD FENCE
	TREE LINE
	FLOW LINE

ABBREVIATION TABLE

M.G.	MATCH GRADE
P	PAVEMENT
TC	TOP OF CURB
EP	EDGE OF PAVEMENT
R/W	RIGHT-OF-WAY
TCE	TEMPORARY CONSTRUCTION EASEMENT
PROP.	PROPOSED
EXIST.	EXISTING
TYP.	TYPICAL
(R)	REMOVAL
CONST.	CONSTRUCT
TBM	TEMPORARY BENCHMARK
C.P.	CONTROL POINT
D.N.D.	DO NOT DISTURB
U.I.P.	USE IN PLACE
ADJ.	ADJUST
A.C.	ASPHALTIC CONCRETE
PVMT.	PAVEMENT
ESMT.	EASEMENT
CONC.	CONCRETE
AGG.	AGGREGATE
SURF.	SURFACE
N.T.S.	NOT TO SCALE
B-B	BACK OF CURB TO BACK OF CURB

VICINITY MAP

SCALE: 1"=1000'

DESIGN DESIGNATION

W. MILLER ROAD: ROAD CLASS = MINOR COLLECTOR; DESIGN SPEED = 35 MPH

INDEX OF SHEETS

1	TITLE SHEET
2	GENERAL NOTES
3	ALIGNMENT DATA
4 - 5	TYPICAL SECTIONS
6 - 10	PLAN AND PROFILE
11 - 14	STORM DRAINAGE PLAN AND PROFILE
15 - 16	PAVEMENT MARKING AND SIGNING PLAN
17 - 19	STORMWATER POLLUTION PREVENTION PLAN
20 - 24	STANDARD DETAILS
25 - 34	CROSS SECTIONS

Arkansas 811 Know what's below. Call before you dig.

THE LOCATIONS OF EXISTING UNDERGROUND UTILITIES SHOWN ARE APPROXIMATE BASED ON THE BEST INFORMATION AVAILABLE AND MAY NOT REFLECT ALL EXISTING UTILITIES IN THE PROJECT AREA. THE CONTRACTOR IS RESPONSIBLE FOR COORDINATING WITH THE UTILITY COMPANIES FOR LOCATING EXISTING UTILITIES PRIOR TO CONSTRUCTION AND FOR PROTECTION OF SERVICES DURING CONSTRUCTION.

PREPARED & SUBMITTED BY

CERTIFICATE OF AUTHORIZATION — Olsson Inc. No.1010 — ARKANSAS ENGINEER

OLSSON
302 EAST MILLSAP RD.
FAYETTEVILLE, AR 72703

olsson
302 East Millsap Road
Fayetteville, AR 72703
TEL 479.443.3404
www.olsson.com

THIS DOCUMENT WAS ORIGINALLY ISSUED AND SEALED ON JANUARY 17, 2023 BY RICHARD D. HERRICK, A LICENSED PROFESSIONAL ENGINEER IN THE STATE OF ARKANSAS, E-19471

REVISIONS			
REV. NO.	DATE	REVISIONS DESCRIPTION	BY

TITLE SHEET

WEST MILLER ROAD IMPROVEMENTS

CITY OF SPRINGDALE, ARKANSAS

2023

drawn by:	SP
checked by:	EH
approved by:	RH
QA/QC by:	RH
project no.:	020-1643A
drawing no.:	T_TTL_0201643A
date:	01/17/2023

SHEET 1 of 34

DWG: F:\2020\1501-2000\020-1643-a\40-design\AutoCAD\final plans\Sheets\GENERAL\T_TTL_0201643A.dwg
DATE: Jan 17, 2023 9:18am
XREFS: T_TBLK_0201643A T_BASE_0201643A T_PATT_0201643A
USER: ehall

GENERAL NOTES:

1. CONTRACTOR TO PRESERVE ALL SURVEY CONTROL
2. PRIOR TO MOVING OFF THE JOB THE CONTRACTOR SHALL NOTIFY THE ENGINEER AND REQUEST A FINAL WALK–THROUGH OF THE CONSTRUCTION SITE.
3. LOCATION AND ELEVATIONS OF IMPROVEMENTS TO BE MET (OR AVOIDED) BY WORK TO BE DONE SHALL BE CONFIRMED BY THE CONTRACTOR THROUGH FIELD EXPLORATIONS PRIOR TO CONSTRUCTION. CONTRACTOR SHALL REPORT TO THE DEVELOPER'S ENGINEER, CITY INSPECTOR, OR DEVELOPER'S ENGINEER FIELD REPRESENTATIVE ANY DISCREPANCIES BETWEEN HIS MEASUREMENTS AND THESE PLANS.
4. THE EXISTENCE AND LOCATION OF UNDERGROUND UTILITY PIPES AND STRUCTURES SHOWN ON THESE PLANS WERE OBTAINED BY A SEARCH OF AVAILABLE RECORDS TO THE BEST OF OUR KNOWLEDGE CONSTITUTES ALL KNOWN FACILITIES. HOWEVER, THE CONTRACTOR IS REQUIRED TO TAKE DUE PRECAUTIONARY MEASURES TO PROTECT ANY EXISTING UTILITIES OR STRUCTURES LOCATED AT THE WORK SITE. IT IS THE CONTRACTOR'S RESPONSIBILITY TO CONTACT UNDERGROUND SERVICE ALERT @ 811 IN ADVANCE OF ANY EXCAVATION FOR THE MARK–OUT OF THE LOCATION OF UTILITIES AND NOTIFICATION OF COMMENCEMENT OF WORK.
5. BEFORE EXCAVATING FOR THIS CONTRACT, THE CONTRACTOR SHALL FIELD VERIFY LOCATION OF UNDERGROUND UTILITIES. CONTRACTOR SHALL MAKE EXPLORATION EXCAVATIONS AND LOCATE EXISTING UNDERGROUND UTILITIES SUFFICIENTLY AHEAD OF CONSTRUCTION TO PERMIT REVISIONS TO PLAN IF REVISIONS ARE NECESSARY BECAUSE OF ACTUAL LOCATION OF EXISTING FACILITIES.
6. CONTRACTOR IS REQUIRED TO TAKE PRECAUTIONARY MEASURES TO PROTECT THE UTILITY LINES SHOWN AND ANY OTHER EXISTING LINES NOT OF RECORD OR NOT SHOWN ON THESE PLANS.
7. THE CONTRACTOR SHALL USE CAUTION AROUND ANY EXISTING UTILITIES OR IMPROVEMENTS LOCATED ON SITE. HE SHALL BE RESPONSIBLE FOR THE REPAIRS OF SUCH STRUCTURES WHEN BROKEN OR OTHERWISE DAMAGED BY THE NEW CONSTRUCTION.
8. ALL SPOIL MATERIAL SHALL BE REMOVED FROM THE STREET ROW, UTILITY EASEMENT, OR ACCESS EASEMENT BY THE CONTRACTOR. SPOIL MATERIAL SHALL BE DEPOSITED WITHIN THE SITE DEVELOPMENT BOUNDARY IN AREAS DESIGNATED BY THE DEVELOPER'S ENGINEER. THE MATERIAL SHALL BE STOCKPILED OR SPREAD AS DIRECTED BY THE ENGINEER. NO SEPARATE PAYMENT SHALL BE MADE FOR DISPOSAL OF SPOIL MATERIAL; IT SHALL BE CONSIDERED SUBSIDIARY TO THE PRICE BID.
9. A PORTABLE RESTROOM FACILITY WILL BE REQUIRED ON–SITE DURING CONSTRUCTION ACTIVITIES.
10. ANY ON–SITE FUELING WILL COMPLY WITH LOCAL, STATE AND FEDERAL REQUIREMENTS.
11. EXISTING UTILITY LINES, EITHER OVERHEAD OR UNDERGROUND, AND PERMANENT STRUCTURE WITHIN THE PROPERTY LINES SHALL BE KEPT FREE OF DAMAGE BY CONTRACTOR'S OPERATIONS. IF SUCH UTILITY OR STRUCTURE IS DAMAGED, IT SHALL BE RESTORED AT THE CONTRACTOR'S EXPENSE. IF ANY UTILITY LINES OR STRUCTURES ARE DAMAGED DURING OPERATIONS, THE CONTRACTOR SHALL NOTIFY THE ENGINEER IMMEDIATELY FOR FURTHER INSTRUCTIONS.
12. THE CONTRACTOR IS RESPONSIBLE FOR OBTAINING ALL NECESSARY PERMITS PRIOR TO COMMENCING CONSTRUCTION.
13. ALL DIMENSIONS ARE TO THE EDGE OF PAVEMENT, BACK OF CURB OR FACE OF BUILDING. FOLLOW WRITTEN DIMENSIONS ALWAYS. DO NOT SCALE. DIMENSIONS ARE IN FEET UNLESS OTHERWISE NOTED.
14. CONTRACTOR IS RESPONSIBLE FOR ALL TRAFFIC CONTROL & SAFETY MEASURES. CONTRACTOR TO PROVIDE A DETAILED "MAINTENANCE OF TRAFFIC" PLAN TO BE REVIEWED AND APPROVED BY THE ENGINEER.
15. CONTRACTOR SHALL NOTIFY THE APPROPRIATE UTILITY COMPANIES TO COORDINATE CONNECTIONS.
16. CONTRACTOR SHALL BE RESPONSIBLE FOR EROSION AND DUST CONTROL, ANY DAMAGE FROM BLOWING DUST OR EROSION AND RUNOFF FROM THE SITE SHALL BE REPAIRED BY THE CONTRACTOR AT NO ADDITIONAL COST TO THE OWNER.
17. THE CONTRACTOR IS RESPONSIBLE FOR PROTECTION OF ALL PROPERTY CORNERS.
18. THE CONTRACTOR IS RESPONSIBLE FOR MAINTAINING THE SITE THROUGHOUT CONSTRUCTION INCLUDING MOWING AS DIRECTED. CONTRACTOR IS REQUIRED TO MOW THE SITE A MINIMUM OF TWO TIMES PRIOR TO TURNING OVER TO THE CITY.
19. THE CONTRACTOR SHALL ONLY REMOVE TREES WITHIN THE PROPOSED RIGHT OF WAY UNLESS OTHERWISE NOTED ON THE DEMOLITION PLANS. THE CONTRACTOR IS TO PROTECT ALL OTHER TREES NOT SHOWN TO BE REMOVED.
20. ALL CONSTRUCTION SHALL CONFIRM TO THE STANDARD SPECIFICATIONS AND STANDARD DETAILS OF THE CITY OF SPRINGDALE.

olsson
302 East Millsap Road
Fayetteville, AR 72703
TEL 479.443.3404
www.olsson.com

THIS DOCUMENT WAS ORIGINALLY ISSUED AND SEALED ON JANUARY 17, 2023 BY RICHARD D. HERRICK, A LICENSED PROFESSIONAL ENGINEER IN THE STATE OF ARKANSAS, E-19471

REVISIONS

REV. NO.	DATE	REVISIONS DESCRIPTION	BY

GENERAL NOTES

WEST MILLER ROAD IMPROVEMENTS

CITY OF SPRINGDALE, ARKANSAS

2023

drawn by: SP
checked by: EH
approved by: RH
QA/QC by: RH
project no.: 020-1643A
drawing no.: T_GEN_0201643A
date: 01/17/2023

DWG: F:\2022\1501-2000\020-1643-a\40-design\AutoCAD\final plans\Sheets\GENERAL\T_GEN_0201643A.dwg USER: ehall
DATE: Jan 17, 2023 9:18am XREFS: T_TBLK_0201643A

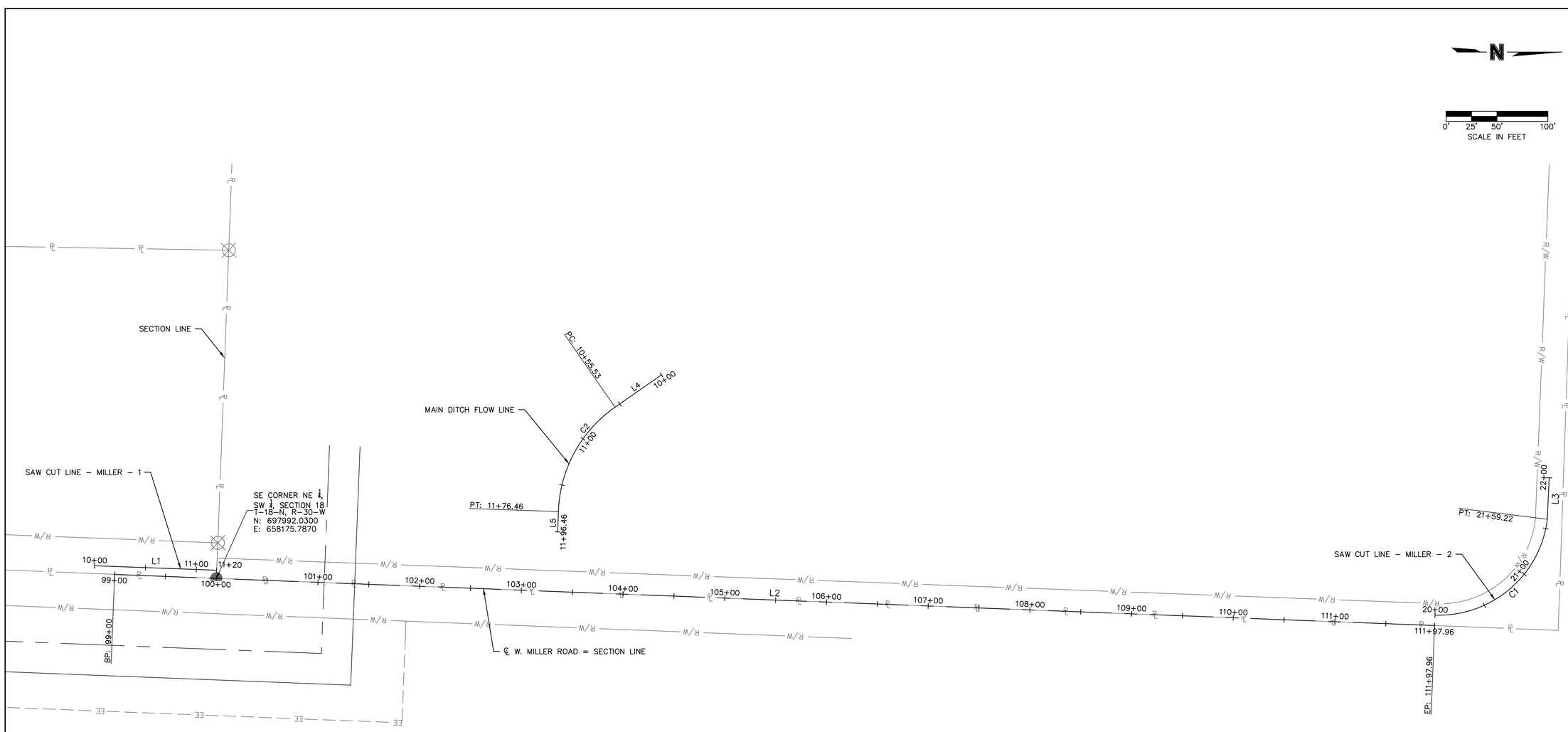

CENTERLINE - MILLER									
NO.		STATION	NORTHING	EASTING	LENGTH	LINE/CHORD BEARING	DELTA	TANGENT	RADIUS
L2		99+00.00 111+97.96	697892.1048 699189.0980	658171.9187 658222.1277	1297.96'	N2°13'01"E			

SAW CUT LINE - MILLER - 1									
NO.		STATION	NORTHING	EASTING	LENGTH	LINE/CHORD BEARING	DELTA	TANGENT	RADIUS
L1		10+00.00 11+20.00	697872.4241 697992.3392	658163.3795 658167.7989	120.00'	N2°06'38"E			

SAW CUT LINE - MILLER - 2									
NO.		STATION	NORTHING	EASTING	LENGTH	LINE/CHORD BEARING	DELTA	TANGENT	RADIUS
C1	PC= PI= PT=	20+00.00 20+98.25 21+59.22	699189.4936 699287.6926 699299.8122	658211.9085 658215.2153 658117.7109	159.22'	N40°29'35"W	84°50'36"	98.25'	107.52'
L3		21+59.22 22+00.00	699299.8122 699301.7262	658117.7109 658076.9724	40.78'	N87°18'36"W			

FL - MAIN DITCH									
NO.		STATION	NORTHING	EASTING	LENGTH	LINE/CHORD BEARING	DELTA	TANGENT	RADIUS
C2	PC= PI= PT=	10+55.53 11+20.77 11+76.46	698383.8766 698330.3260 698328.1994	658007.6094 658044.8734 658110.0788	120.93'	S61°28'57"E	53°17'57"	65.24'	130.00'
L4		10+00.00 10+55.53	698429.4536 698383.8766	657975.8939 658007.6094	55.53'	S34°49'58"E			
L5		11+76.46 11+96.46	698328.1994 698327.5475	658110.0788 658130.0685	20.00'	S88°07'55"E			

olsson
302 East Millsap Road
Fayetteville, AR 72703
TEL 479.443.3404
www.olsson.com

THIS DOCUMENT WAS ORIGINALLY ISSUED AND SEALED ON JANUARY 17, 2023 BY RICHARD D. HERRICK, A LICENSED PROFESSIONAL ENGINEER IN THE STATE OF ARKANSAS, E-19471

REV. NO.	DATE	REVISIONS DESCRIPTION	BY

REVISIONS

ALIGNMENT DATA

WEST MILLER ROAD IMPROVEMENTS

CITY OF SPRINGDALE, ARKANSAS

2023

drawn by: SP
checked by: EH
approved by: RH
QA/QC by: RH
project no.: 020-1643A
drawing no.: T_ALG_0201643A
date: 01/17/2023

DWG: F:\2020\1501-2000\020-1643-a\40-design\AutoCAD\final plans\Sheets\ALIGNMENT\T_ALG_0201643A.dwg
DATE: Jan 17, 2023 9:18am
XREFS: T_TBLK_0201643A
V_XBNDY_0201643
USER: ehall

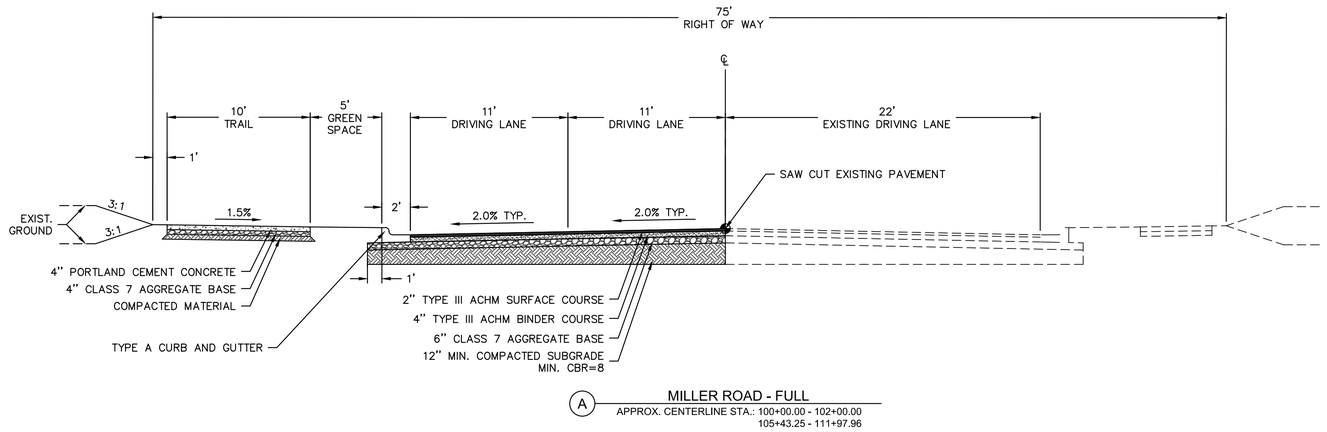

A MILLER ROAD - FULL

APPROX. CENTERLINE STA.: 100+00.00 - 102+00.00
105+43.25 - 111+97.96

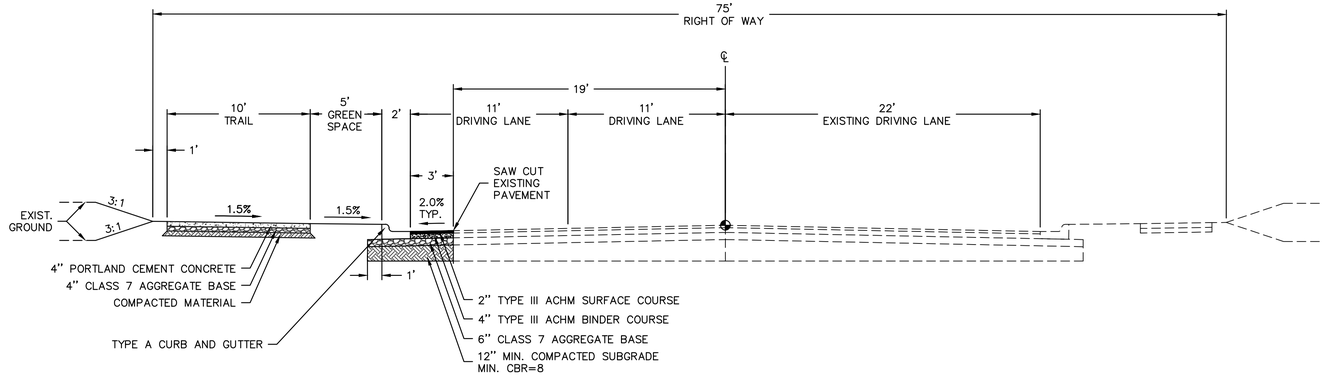

B MILLER ROAD - CURB

APPROX. CENTERLINE STA.: 102+00.00 - 105+43.25

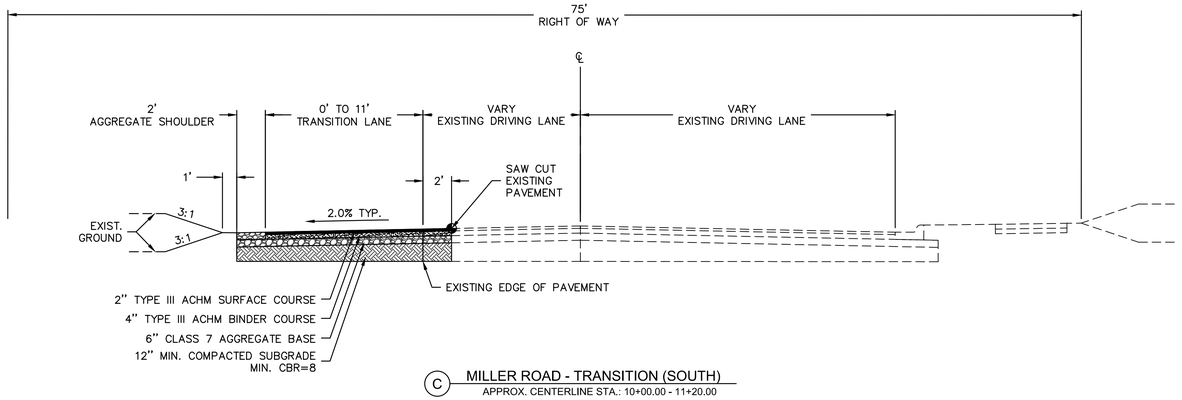

C MILLER ROAD - TRANSITION (SOUTH)

APPROX. CENTERLINE STA.: 10+00.00 - 11+20.00

olsson
302 East Millsap Road
Fayetteville, AR 72703
TEL 479.443.3404
www.olsson.com

THIS DOCUMENT WAS ORIGINALLY ISSUED AND SEALED ON JANUARY 17, 2023 BY RICHARD D. HERRICK, A LICENSED PROFESSIONAL ENGINEER IN THE STATE OF ARKANSAS, E-19471

REVISIONS

REV. NO.	DATE	REVISIONS DESCRIPTION	BY

TYPICAL SECTIONS

WEST MILLER ROAD IMPROVEMENTS

CITY OF SPRINGDALE, ARKANSAS

2023

drawn by: SP
checked by: EH
approved by: RH
QA/QC by: RH
project no.: 020-1643A
drawing no.: T_TYP_0201643A
date: 01/17/2023

SHEET
4 of 34

DWG: F:\2020\1501-2000\020-1643-01\40-design\AutoCAD\final plans\Sheets\TYP SECTIONS\T_TYP_0201643A.dwg USER: ehall
DATE: Jan 17, 2023 9:19am XREFS: T_TBLK_0201643A

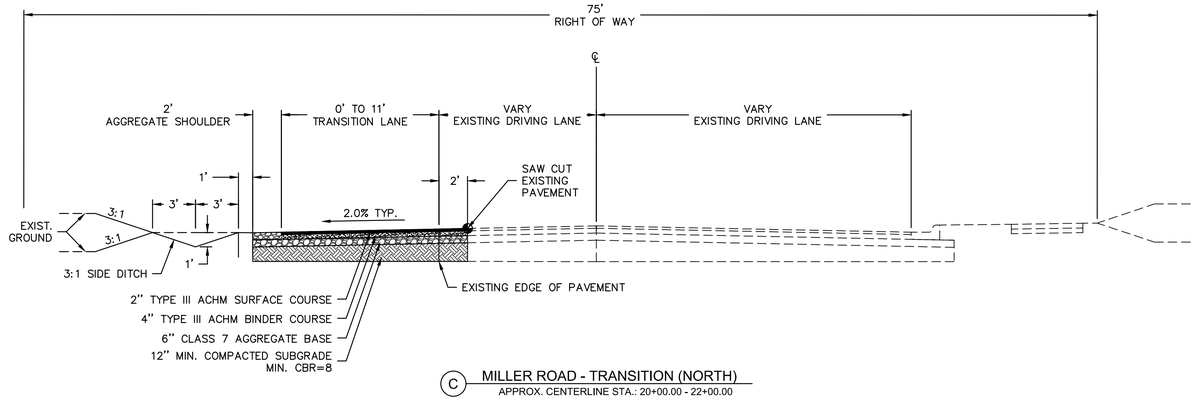

C MILLER ROAD - TRANSITION (NORTH)

APPROX. CENTERLINE STA.: 20+00.00 - 22+00.00

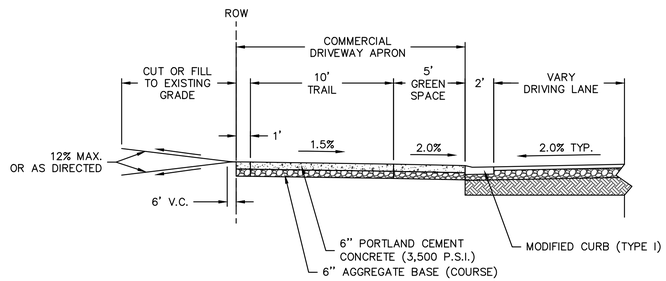

D COMMERCIAL DRIVEWAY

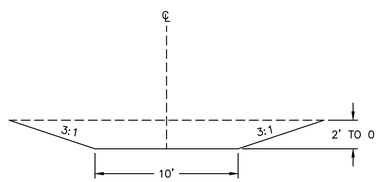

E MAIN DITCH

APPROX. CENTERLINE STA.: 10+00.00 - 12+84.67

olsson
302 East Millsap Road
Fayetteville, AR 72703
TEL 479.443.3404
www.olsson.com

THIS DOCUMENT WAS ORIGINALLY ISSUED AND SEALED ON JANUARY 17, 2023 BY RICHARD D. HERRICK, A LICENSED PROFESSIONAL ENGINEER IN THE STATE OF ARKANSAS, E-19471

REVISIONS

REV. NO.	DATE	REVISIONS DESCRIPTION	BY

TYPICAL SECTIONS

WEST MILLER ROAD IMPROVEMENTS

CITY OF SPRINGDALE, ARKANSAS

2023

drawn by: SP
checked by: EH
approved by: RH
QA/QC by: RH
project no.: 020-1643A
drawing no.: T_TYP_0201643A
date: 01/17/2023

SHEET
5 of 34

DWG: F:\2021\1501-2000\020-1643-a\40-design\AutoCAD\final plans\Sheets\TYP SECTIONS\T_TYP_0201643A.dwg USER: ehall
DATE: Jan 17, 2023 9:19am XREFS: T_TBLK_0201643A

DWG: F:\2020\1501-2000\020-1643-a\40-design\AutoCAD\final plans\Sheets\PLAN&PROFILE\T_RPP01_0201643A.dwg USER: ehall
DATE: Jan 17, 2023 9:20am XREFS: V_XTOPO_0201643 V_XBNDY_0201643 T_BASE_0201643A T_TBLK_0201643A
T_CORR_0201643A T_PATT_0201643A T_STRM_0201643A 404932-C-2D-SITE PLAN-P T_KEYM_0201643A

LEGEND

- GRADING/CONSTRUCTION LIMITS
- PROPOSED ASPHALT PAVEMENT
- PROPOSED CONCRETE
- PROPOSED GRAVEL

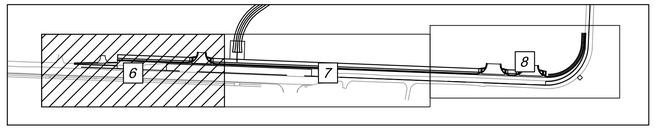

N

0' 10' 20' 40'
SCALE IN FEET

INSTALL SECURITY FENCE (BY OTHERS0

BEGIN PROJECT STA: 10+00.00

℄ STA: 99+58.44 CONSTRUCT RESIDENTAIL ASPHALT DRIVEWAY

2.00' SHOULDER

40.0' CL TO ROW
24.00' CL TO BOC
22.00' CL TO EOP

5.00' GREEN SPACE
10.00' SIDEWALK

PERMANENT EASEMENT (BY OTHERS)

19.00' CL TO SAW CUT LINE
3.00' SAW CUT LINE TO EOP

CECC STANDARD STREET LIGHT
300' SPACING (TYP.)
CONTACT CECC DEREK THURMAN OR BRANDON TUTTLE FOR MORE INFORMATION

10+00 11+00 11+20 100+00 101+00 102+00 103

PROPOSED SAW CUT LINE – MILLER – 1
SAW CUT 2' OFFSET FROM EXISTING EDGE OF PAVEMENT
STA: 10+00.00 TO 11+20.00

℄ OF W. MILLER ROAD

W. MILLER ROAD

PROPOSED SAW CUT LINE = CENTERLINE – MILLER
STA: 100+00.00 TO 101+37.71

PROPOSED SAW CUT LINE
SAW CUT 19' OFFSET FROM PROPOSED CENTERLINE
STA: 101+37.71 TO 105+43.25

EXISTING 38"X24" STORM DRAIN TO REMAIN

PROPOSED WATERLINE (BY OTHERS)

60" TW TRANSMISSION MAIN FROM WTP (BY OTHERS)

60.00"

MATCH LINE STA:103+00.00

SAW CUT LINE - MILLER - 1 (10+00 - 11+25)

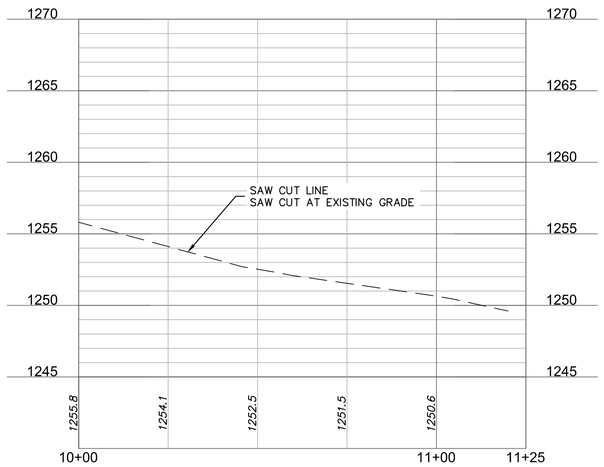

CENTERLINE - MILLER (99+00 - 103+00)

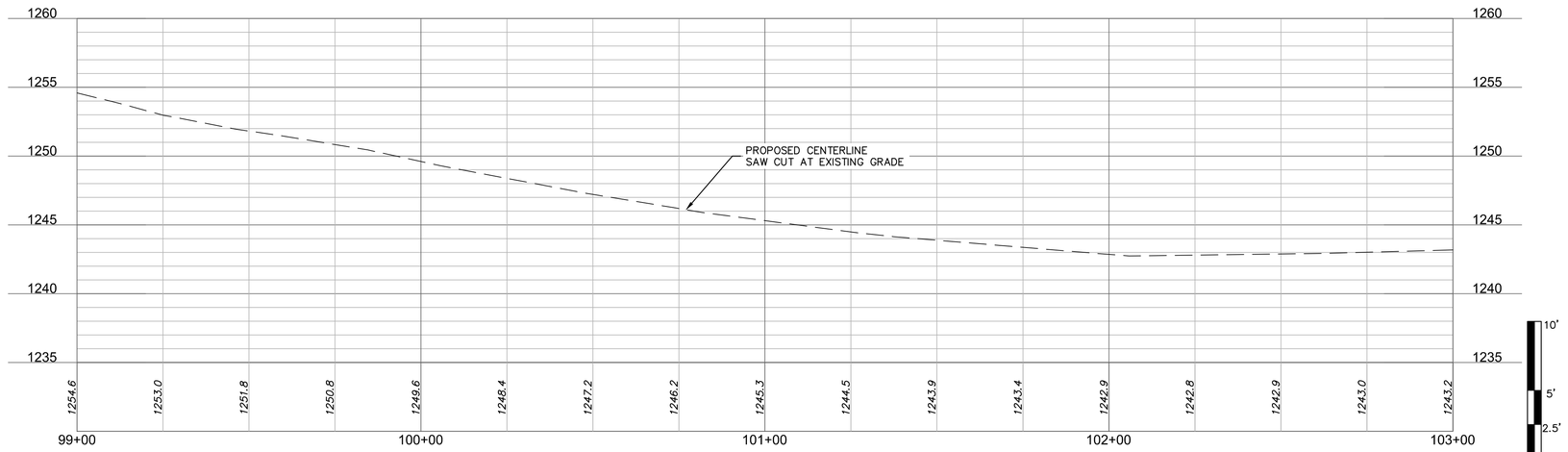

olsson
302 East Millsap Road
Fayetteville, AR 72703
TEL 479.443.3404
www.olsson.com

THIS DOCUMENT WAS ORIGINALLY ISSUED AND SEALED ON JANUARY 17, 2023 BY RICHARD D. HERRICK, A LICENSED PROFESSIONAL ENGINEER IN THE STATE OF ARKANSAS, E-19471

REV. NO.	DATE	REVISIONS DESCRIPTION	BY

REVISIONS

PLAN AND PROFILE

WEST MILLER ROAD IMPROVEMENTS

CITY OF SPRINGDALE, ARKANSAS

2023

drawn by: SP
checked by: EH
approved by: RH
QA/QC by: RH
project no.: 020-1643A
drawing no.: T_RPP01_0201643A
date: 01/17/2023

SHEET
6 of 34

DWG: F:\2020\1501-2000\020-1643-a\40-design\AutoCAD\final plans\Sheets\PLAN&PROFILE\T_RPP01_0201643A.dwg USER: ehall
DATE: Jan 17, 2023 9:21am XREFS: V_XTOPO_0201643 V_XBNDY_0201643 T_BASE_0201643A T_TBLK_0201643A
T_CORR_0201643A T_PATT_0201643A T_STRM_0201643A 404932-C-2D-SITE PLAN-P T_KEYM_0201643A

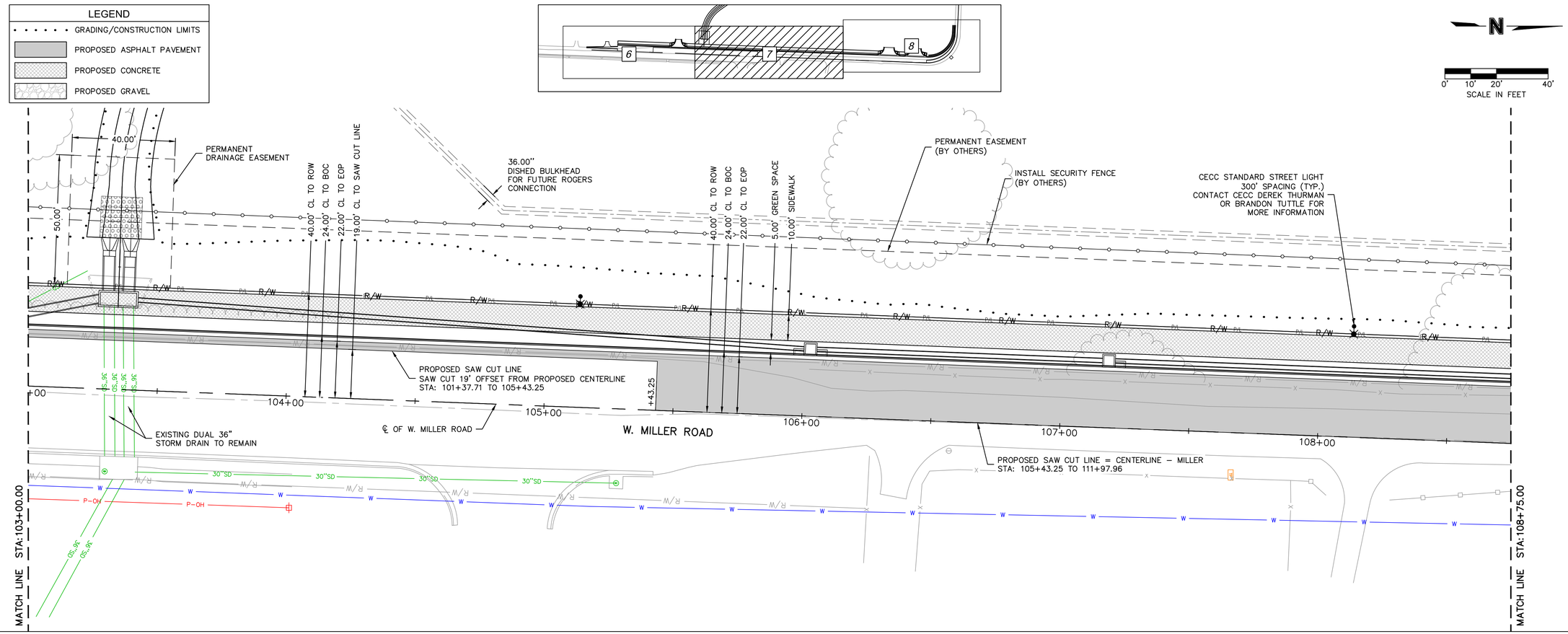

CENTERLINE - MILLER (103+00 - 108+75)

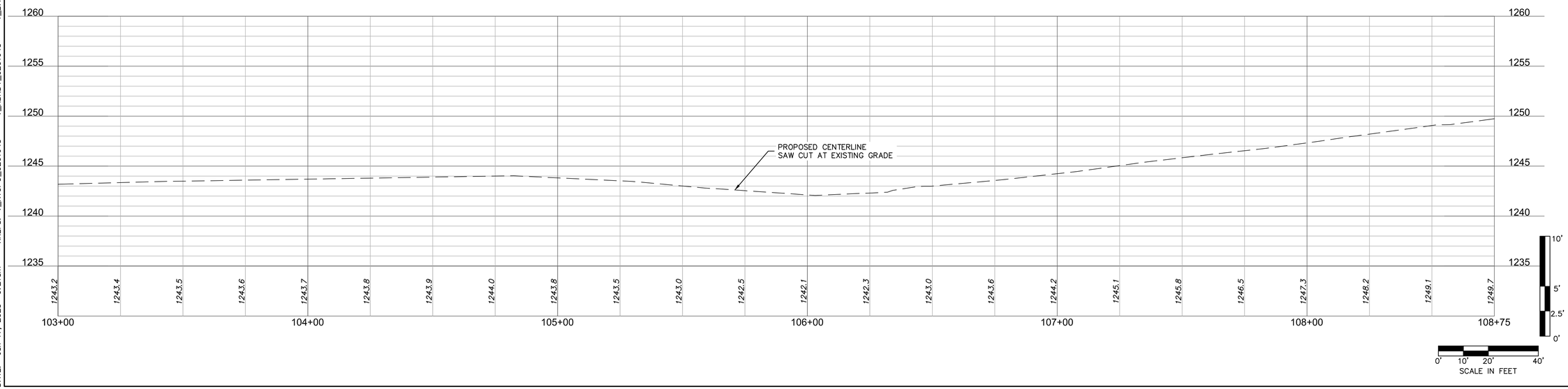

olsson
302 East Millsap Road
Fayetteville, AR 72703
TEL 479.443.3404
www.olsson.com

THIS DOCUMENT WAS ORIGINALLY ISSUED AND SEALED ON JANUARY 17, 2023 BY RICHARD D. HERRICK, A LICENSED PROFESSIONAL ENGINEER IN THE STATE OF ARKANSAS, E-19471

REVISIONS

REV. NO.	DATE	REVISIONS DESCRIPTION	BY

PLAN AND PROFILE

WEST MILLER ROAD IMPROVEMENTS

CITY OF SPRINGDALE, ARKANSAS

2023

drawn by: SP
checked by: EH
approved by: RH
QA/QC by: RH
project no.: 020-1643A
drawing no.: T_RPP01_0201643A
date: 01/17/2023

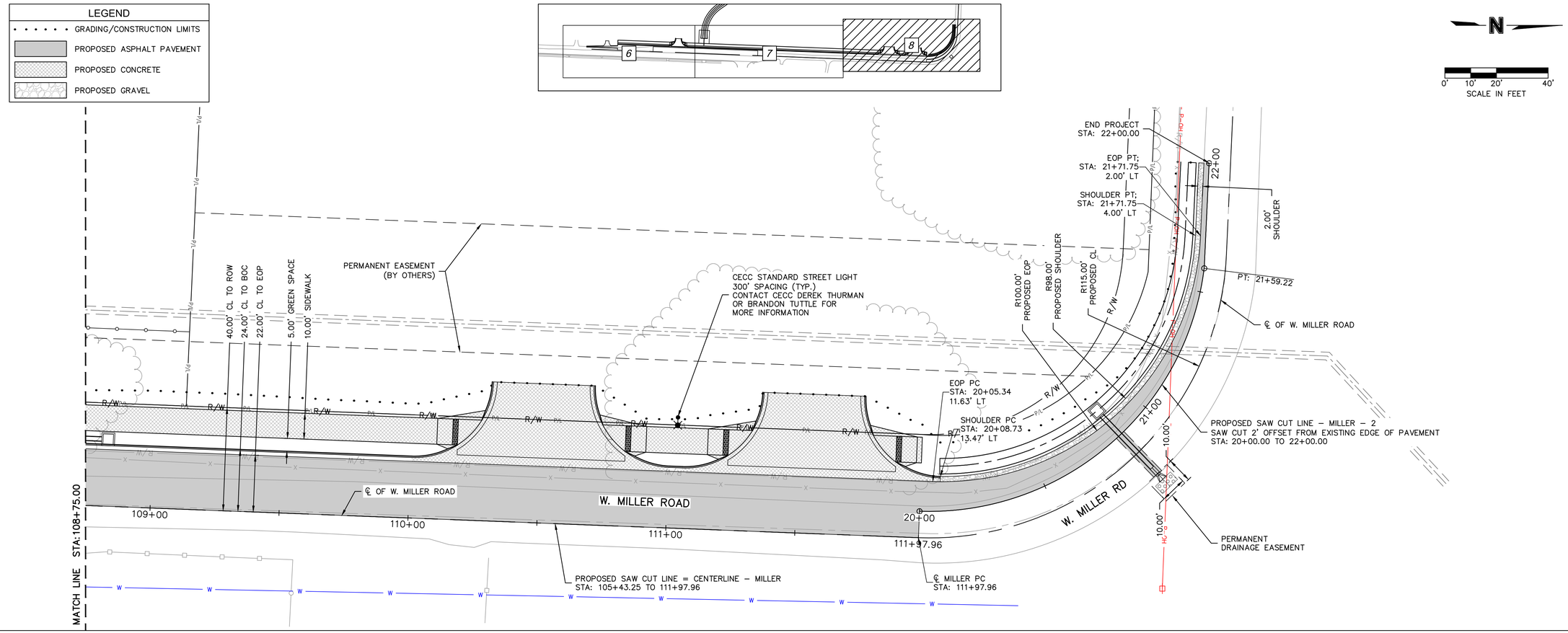

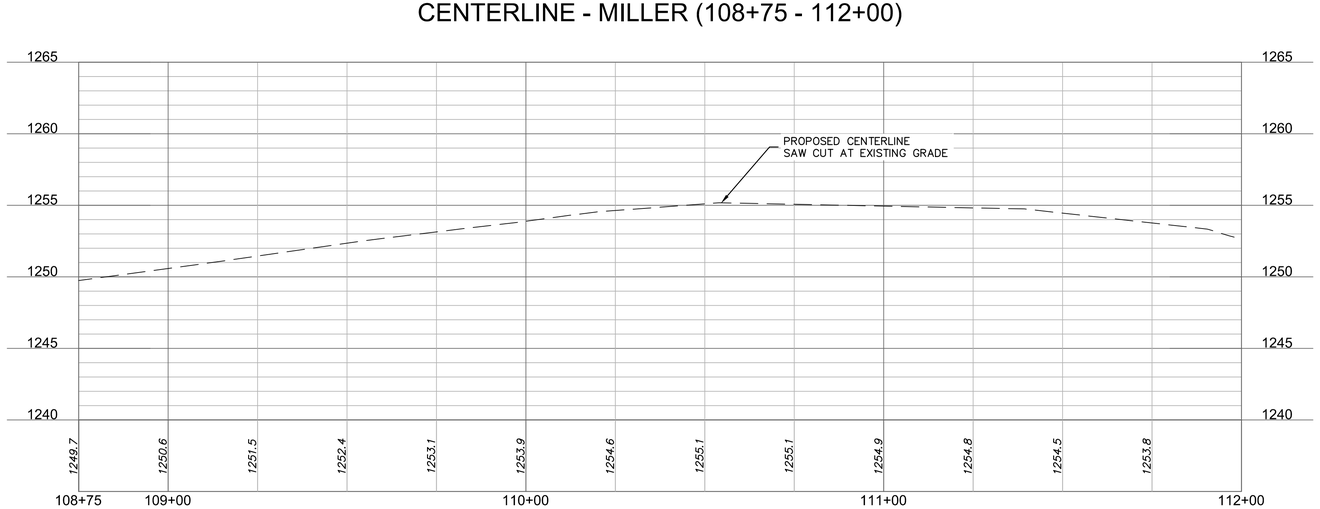

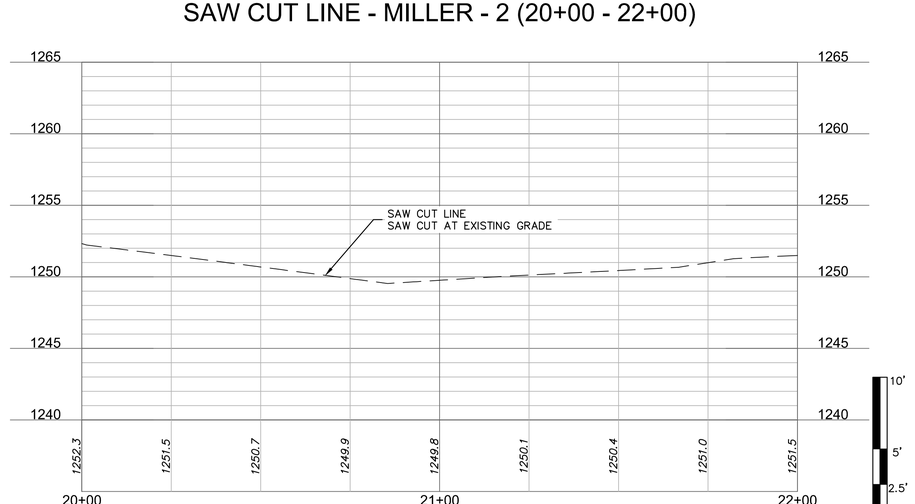

olsson
302 East Millsap Road
Fayetteville, AR 72703
TEL 479.443.3404
www.olsson.com

THIS DOCUMENT WAS ORIGINALLY ISSUED AND SEALED ON JANUARY 17, 2023 BY RICHARD D. HERRICK, A LICENSED PROFESSIONAL ENGINEER IN THE STATE OF ARKANSAS, E-19471

REVISIONS

REV. NO.	DATE	REVISIONS DESCRIPTION	BY

PLAN AND PROFILE

WEST MILLER ROAD IMPROVEMENTS

CITY OF SPRINGDALE, ARKANSAS

2023

drawn by: SP
checked by: EH
approved by: RH
QA/QC by: RH
project no.: 020-1643A
drawing no.: T_RPP01_0201643A
date: 01/17/2023

SHEET
8 of 34

DWG: F:\2020\1501-2000\020-1643-a\40-design\AutoCAD\final plans\Sheets\PLAN&PROFILE\T_RPP01_0201643A.dwg USER: ehall
DATE: Jan 17, 2023 9:21am XREFS: V_XTOPO_0201643 V_XBNDY_0201643 T_BASE_0201643A T_TBLK_0201643A
T_CORR_0201643A T_PATT_0201643A T_STRM_0201643A 404932-C-2D-SITE PLAN-P T_KEYM_0201643A

LEGEND

- GRADING/CONSTRUCTION LIMITS
- PROPOSED ASPHALT PAVEMENT
- PROPOSED CONCRETE
- PROPOSED GRAVEL

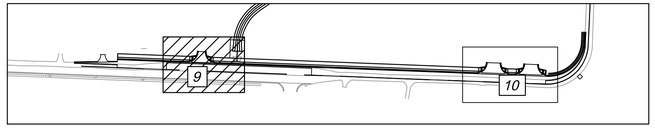

N

0' 10' 20' 40'
SCALE IN FEET

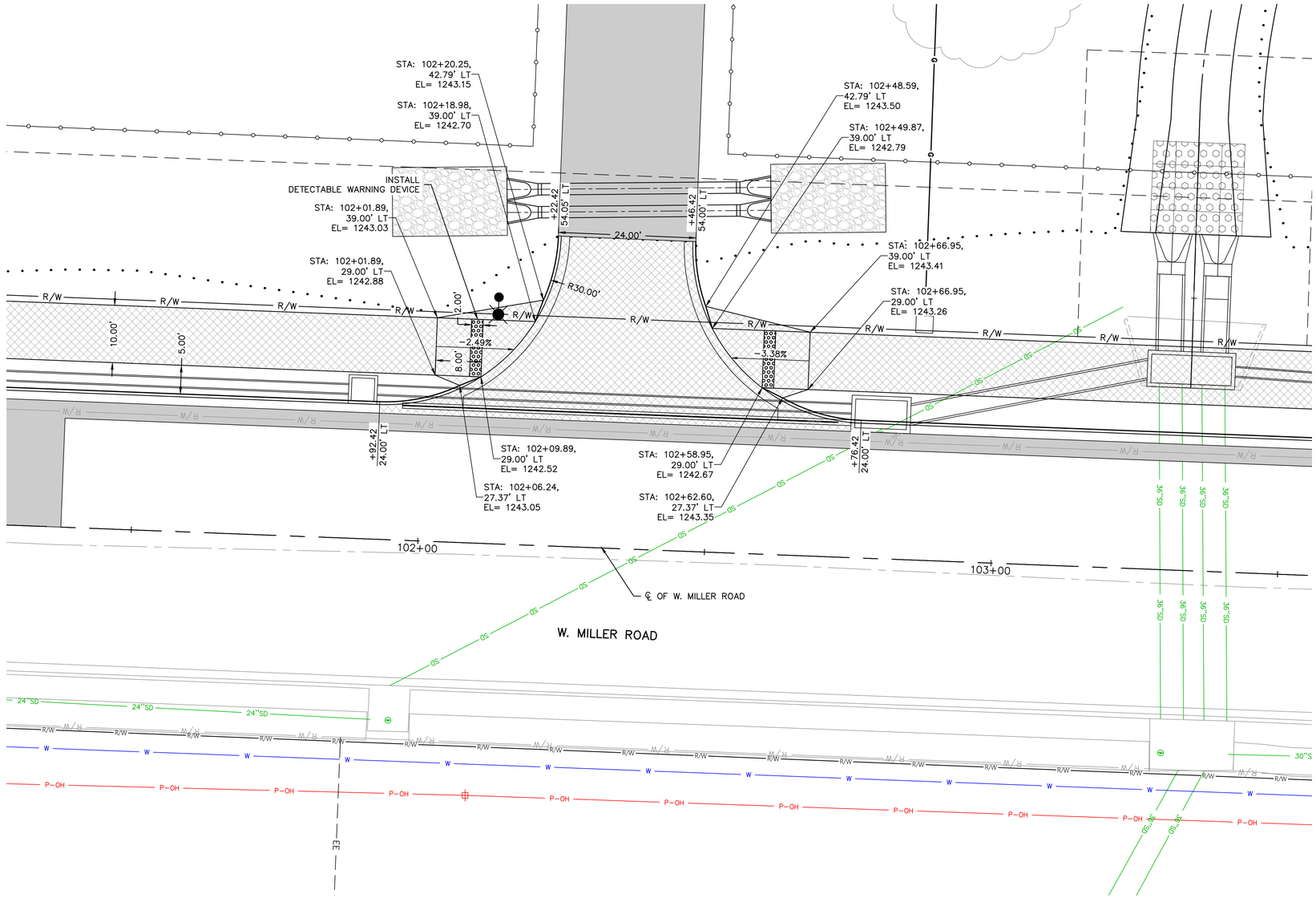

olsson
302 East Millsap Road
Fayetteville, AR 72703
TEL 479.443.3404
www.olsson.com

THIS DOCUMENT WAS ORIGINALLY ISSUED AND SEALED ON JANUARY 17, 2023 BY RICHARD D. HERRICK, A LICENSED PROFESSIONAL ENGINEER IN THE STATE OF ARKANSAS, E-19471

REVISIONS

REV. NO.	DATE	REVISIONS DESCRIPTION	BY

COMMERCIAL DRIVEWAY DETAIL

WEST MILLER ROAD IMPROVEMENTS

CITY OF SPRINGDALE, ARKANSAS

2023

drawn by: SP
checked by: EH
approved by: RH
QA/QC by: RH
project no.: 020-1643A
drawing no.: T_RPP02_0201643A
date: 01/17/2023

SHEET
9 of 34

DWG: F:\2020\1501-2000\020-1643-a\40-design\AutoCAD\final plans\Sheets\PLAN&PROFILE\T_RPP02_0201643A.dwg USER: eholl
DATE: Jan 17, 2023 9:22am XREFS: V_XTOPO_0201643 V_XBNDY_0201643 T_BASE_0201643A T_TBLK_0201643A T_CORR_0201643A T_PATT_0201643A T_STRM_0201643A 404932-C-2D-SITE PLAN-P T_KEYM_0201643A

LEGEND

- GRADING/CONSTRUCTION LIMITS
- PROPOSED ASPHALT PAVEMENT
- PROPOSED CONCRETE
- PROPOSED GRAVEL

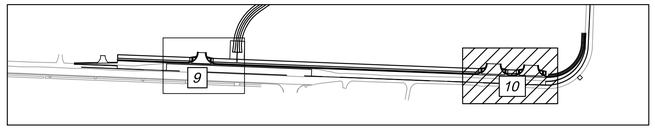

N

0' 10' 20' 40'
SCALE IN FEET

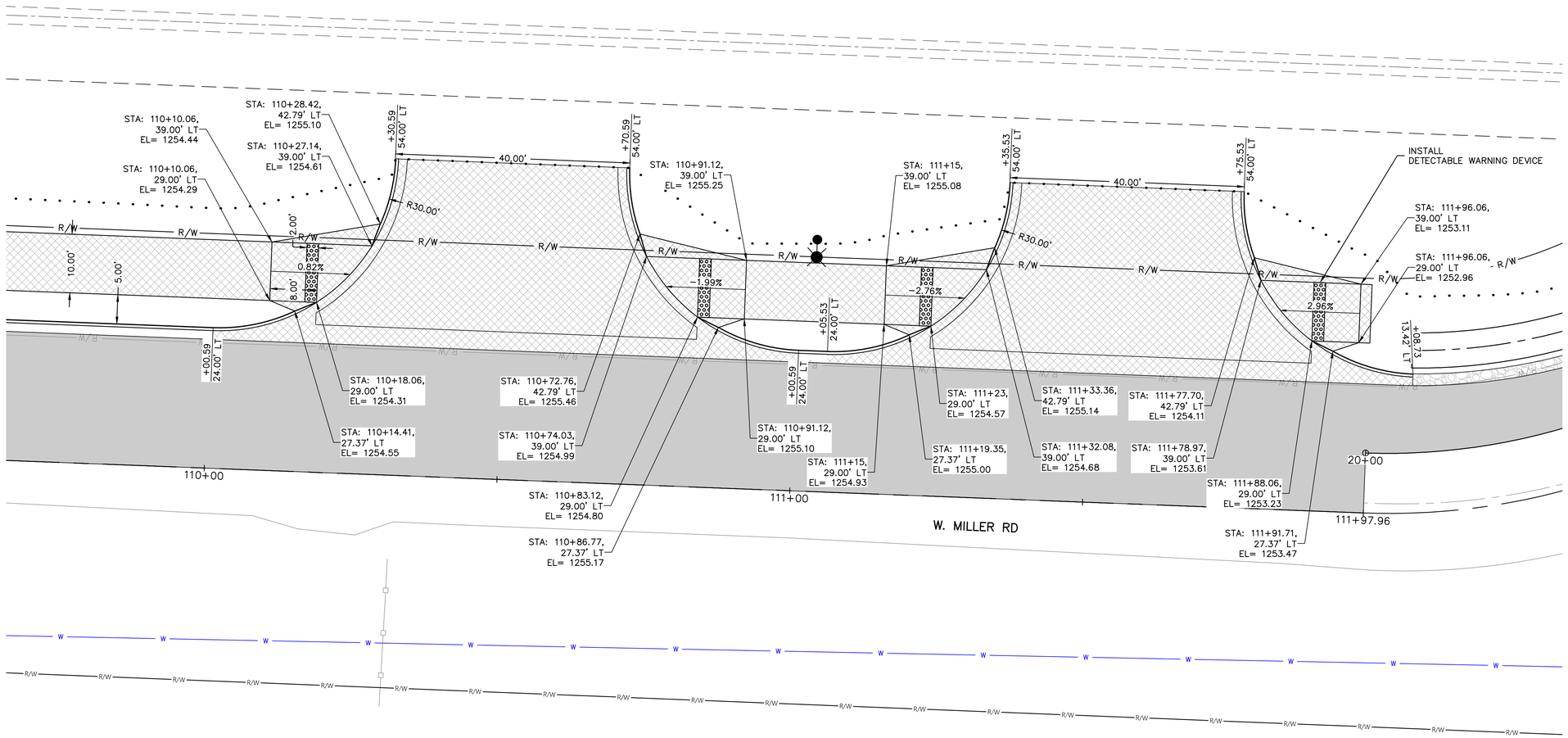

olsson
302 East Millsap Road
Fayetteville, AR 72703
TEL 479.443.3404
www.olsson.com

THIS DOCUMENT WAS ORIGINALLY ISSUED AND SEALED ON JANUARY 17, 2023 BY RICHARD D. HERRICK, A LICENSED PROFESSIONAL ENGINEER IN THE STATE OF ARKANSAS, E-19471

REVISIONS

REV. NO.	DATE	REVISIONS DESCRIPTION	BY

COMMERCIAL DRIVEWAY DETAIL

WEST MILLER ROAD IMPROVEMENTS

CITY OF SPRINGDALE, ARKANSAS

2023

drawn by: SP
checked by: EH
approved by: RH
QA/QC by: RH
project no.: 020-1643A
drawing no.: T_RPP02_0201643A
date: 01/17/2023

SHEET
10 of 34

DWG: F:\2020\1501-2000\020-1643-a\40-design\AutoCAD\final plans\Sheets\PLAN&PROFILE\T_RPP02_0201643A.dwg USER: ehall
DATE: Jan 17, 2023 9:22am XREFS: V_XTOPO_0201643 V_XBNDY_0201643 T_BASE_0201643A T_TBLK_0201643A T_CORR_0201643A T_PATT_0201643A T_STRM_0201643A 404932-C-2D-SITE PLAN-P T_KEYM_0201643A

DWG: F:\2020\1501-2000\020-1643-a\40-design\AutoCAD\final plans\Sheets\STORM DRAINAGE\T_STM_0201643A.dwg USER: ehall
DATE: Jan 17, 2023 9:24am XREFS: V_XTOPO_0201643 V_XBNDY_0201643 T_BASE_0201643A T_TBLK_0201643A
T_CORR_0201643A T_PATT_0201643A T_STRM_0201643A 404932-C-2D-SITE PLAN-P T_KEYM_0201643A

LEGEND

- GRADING/CONSTRUCTION LIMITS
- PROPOSED ASPHALT PAVEMENT
- PROPOSED CONCRETE
- PROPOSED GRAVEL

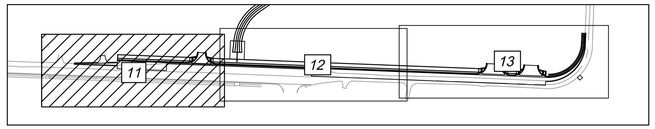

N

0' 10' 20' 40'
SCALE IN FEET

1001-AI
4' X 4' AREA INLET
STA: 100+02.50
RIM= 1250.00
OPEN 3 SIDES (E, W, S)
WEIR FL = 1249.00
N: 697990.651
E: 658149.714

1002-CI
4' X 4' CURB INLET
STA: 101+94.31
RIM= 1243.14
N: 698182.316
E: 658157.134

1003-CI
5' X 9' CURB INLET
STA: 102+79.85
RIM= 1243.11
N: 698272.645
E: 658161.464

INSTALL SECURITY FENCE (BY OTHERS)

PERMANENT EASEMENT (BY OTHERS)

2-24" RCP (BY OTHERS)

INSTALL SLOTTED DRAIN ALONG THE GUTTER LINE SEE SHEET 21 FOR DETAILS

EXISTING 38"X24" PIPE TO BE CONNECTED TO 1003-CI

℄ OF W. MILLER ROAD

W. MILLER ROAD

60" TW TRANSMISSION MAIN FROM WTP (BY OTHERS)

MATCH LINE STA:103+00.00

STORM LINE - 1000 (100+00 - 103+00)

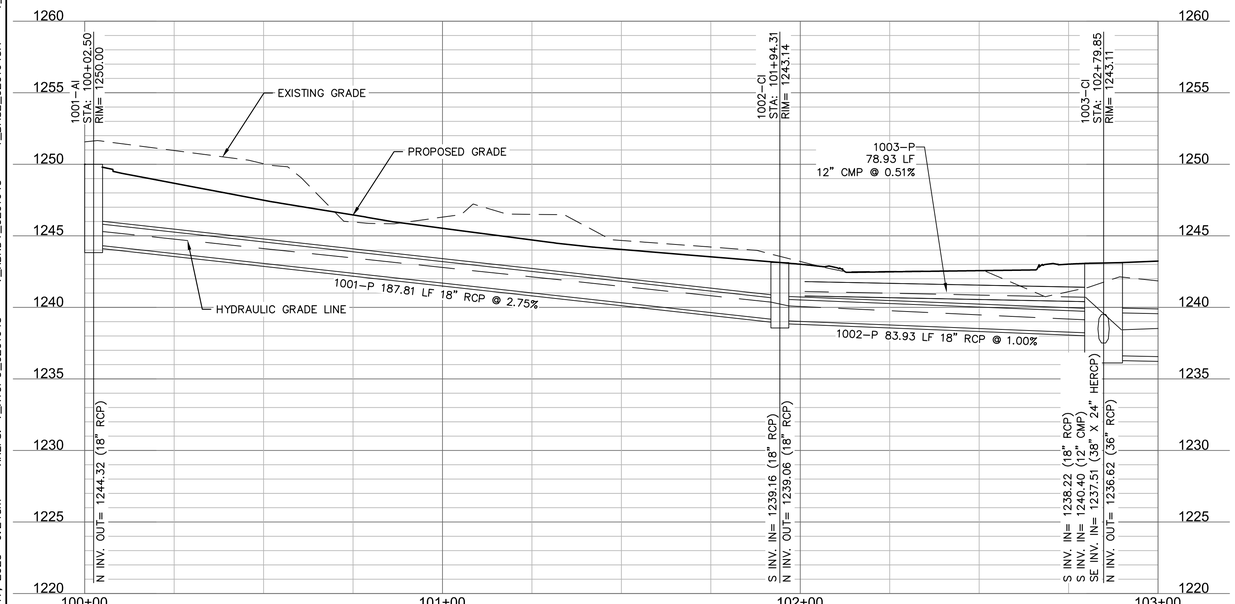

1008-EX TO 1003-CI (0+00 - 1+10.54) SLOTTED DRAIN (0+00 - 0+88.60)

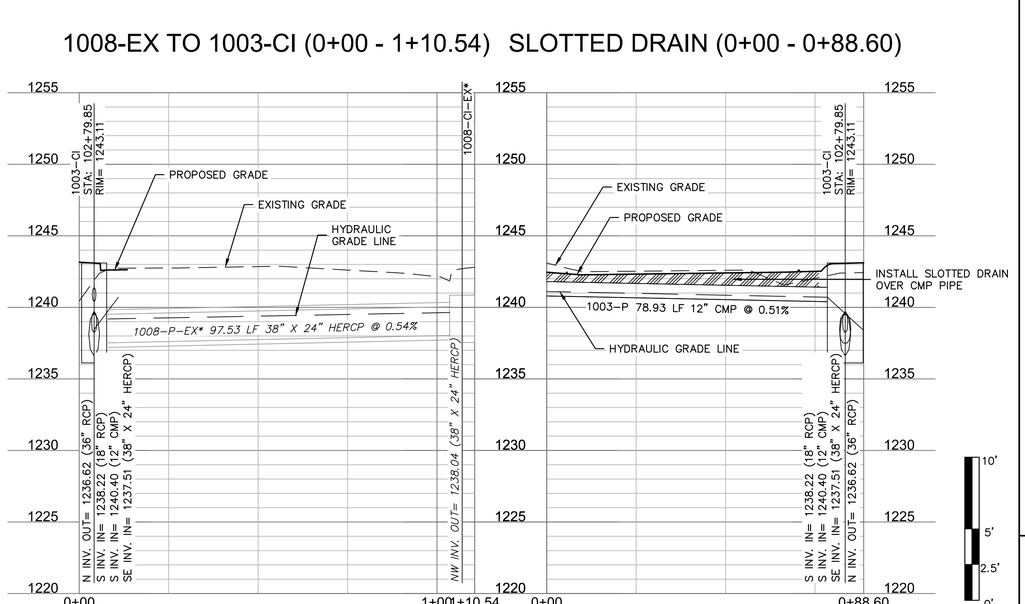

0' 10' 20' 40'
SCALE IN FEET

olsson
302 East Millsap Road
Fayetteville, AR 72703
TEL 479.443.3404
www.olsson.com

THIS DOCUMENT WAS ORIGINALLY ISSUED AND SEALED ON JANUARY 17, 2023 BY RICHARD D. HERRICK, A LICENSED PROFESSIONAL ENGINEER IN THE STATE OF ARKANSAS, E-19471

REV. NO.	DATE	REVISIONS DESCRIPTION	BY

REVISIONS

STORM DRAINAGE PLAN AND PROFILE

WEST MILLER ROAD IMPROVEMENTS

CITY OF SPRINGDALE, ARKANSAS

2023

drawn by: SP
checked by: EH
approved by: RH
QA/QC by: RH
project no.: 020-1643A
drawing no.: T_STM_0201643A
date: 01/17/2023

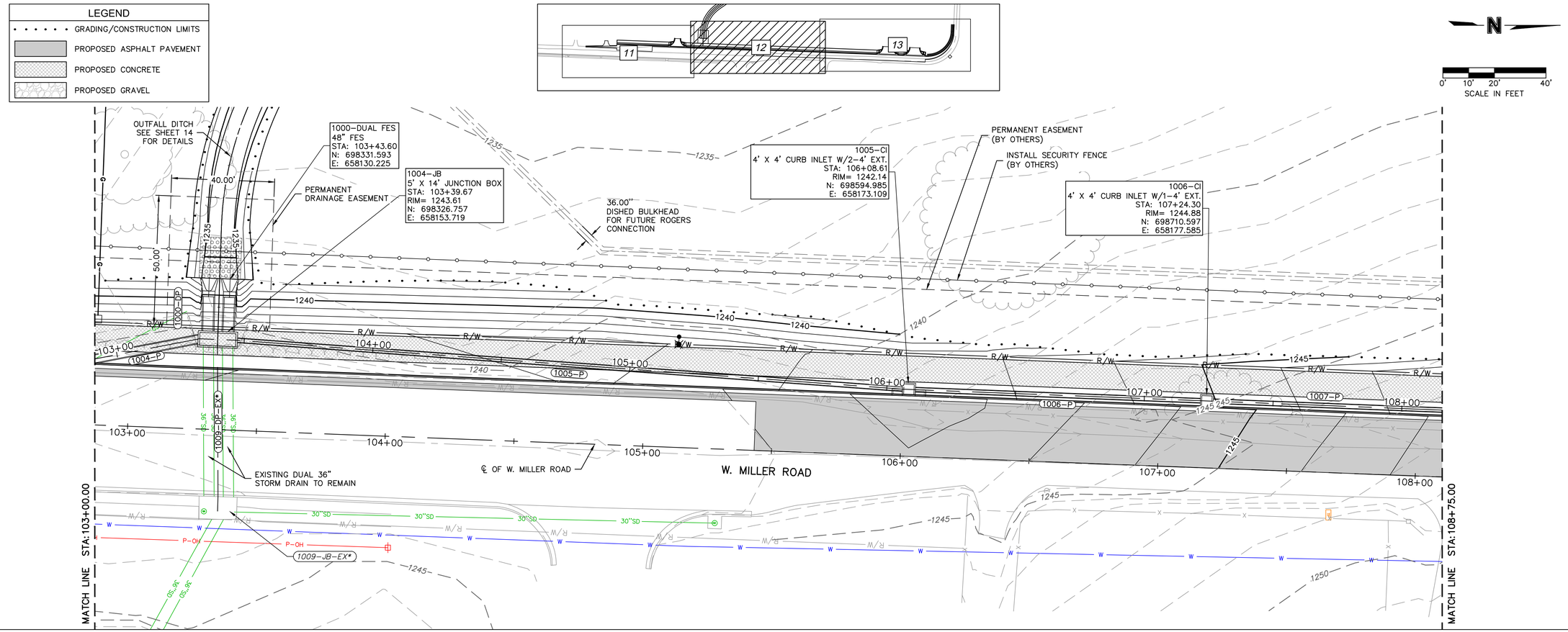

STORM LINE - 1000 (103+00 - 108+00)

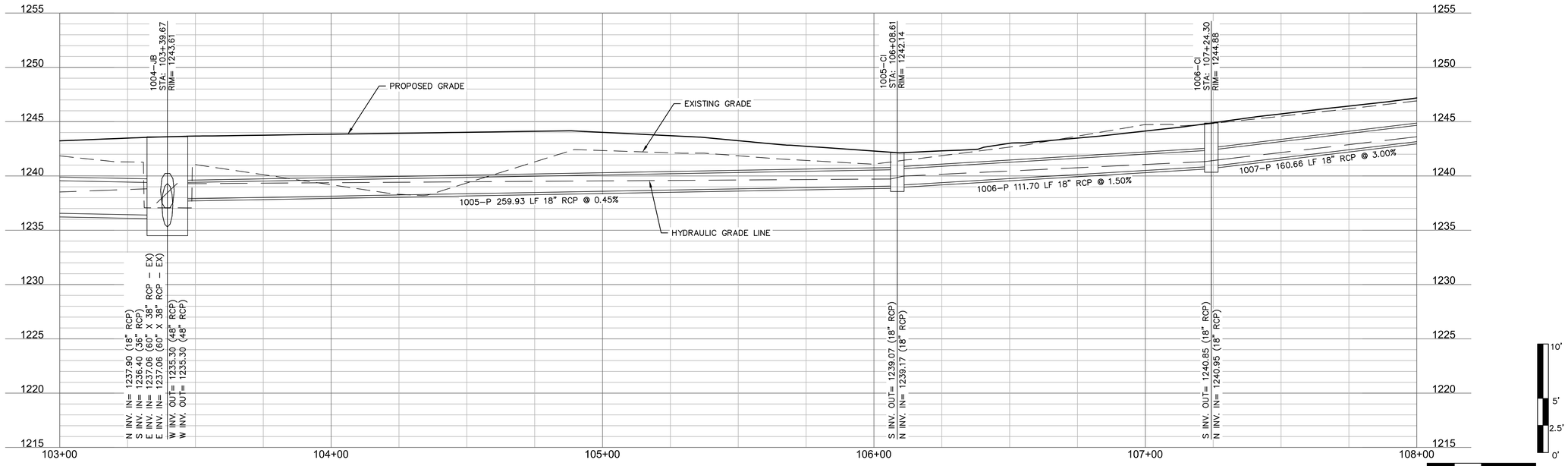

olsson
302 East Millsap Road
Fayetteville, AR 72703
TEL 479.443.3404
www.olsson.com

THIS DOCUMENT WAS ORIGINALLY ISSUED AND SEALED ON JANUARY 17, 2023 BY RICHARD D. HERRICK, A LICENSED PROFESSIONAL ENGINEER IN THE STATE OF ARKANSAS, E-19471

REV. NO.	DATE	REVISIONS DESCRIPTION	BY

REVISIONS

STORM DRAINAGE PLAN AND PROFILE

WEST MILLER ROAD IMPROVEMENTS

CITY OF SPRINGDALE, ARKANSAS

2023

drawn by:	SP
checked by:	EH
approved by:	RH
QA/QC by:	RH
project no.:	020-1643A
drawing no.:	T_STM_0201643A
date:	01/17/2023

SHEET
12 of 34

DWG: F:\2020\1501-2000\020-1643-a\40-design\AutoCAD\final plans\Sheets\STORM DRAINAGE\T_STM_0201643A.dwg USER: ehall
DATE: Jan 17, 2023 9:24am XREFS: V_XTOPO_0201643 V_XBNDY_0201643 T_BASE_0201643A T_TBLK_0201643A T_CORR_0201643A T_PATT_0201643A T_STRM_0201643A 404932-C-2D-SITE PLAN-P T_KEYM_0201643A

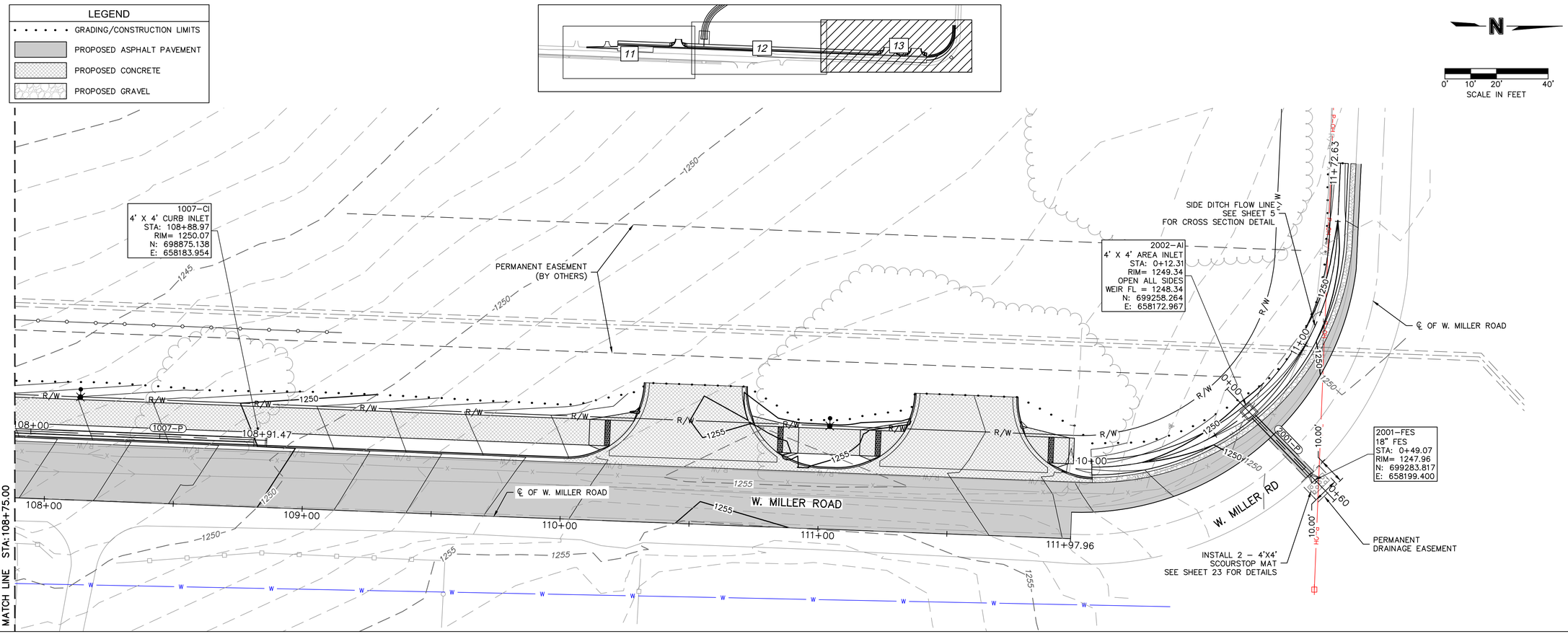

STORM LINE - 1000 (108+00 - 109+00)

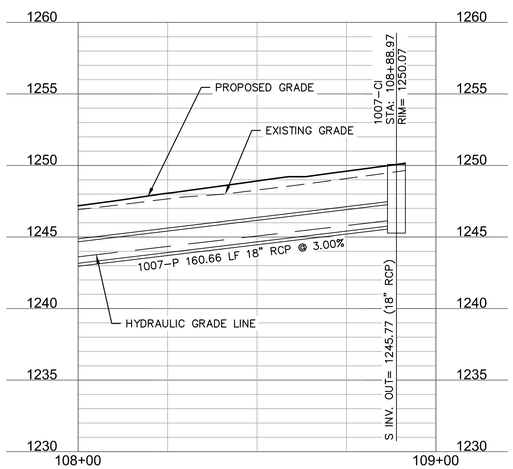

FL - SIDE DITCH (10+00 - 11+72.63)

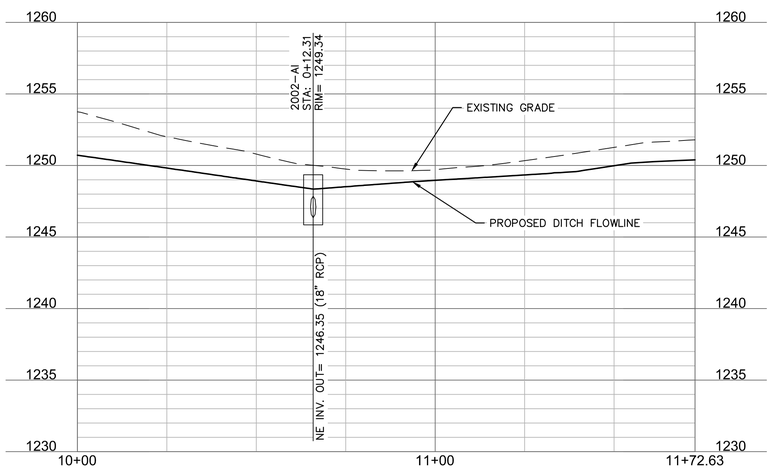

STORM LINE - 2000 (0+00 - 0+60)

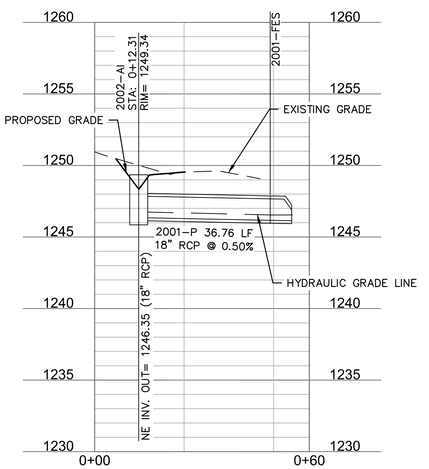

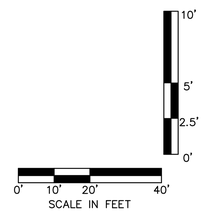

olsson
302 East Millsap Road
Fayetteville, AR 72703
TEL 479.443.3404
www.olsson.com

THIS DOCUMENT WAS ORIGINALLY ISSUED AND SEALED ON JANUARY 17, 2023 BY RICHARD D. HERRICK, A LICENSED PROFESSIONAL ENGINEER IN THE STATE OF ARKANSAS, E-19471

REVISIONS			
REV. NO.	DATE	REVISIONS DESCRIPTION	BY

STORM DRAINAGE PLAN AND PROFILE

WEST MILLER ROAD IMPROVEMENTS

CITY OF SPRINGDALE, ARKANSAS

2023

drawn by:	SP
checked by:	EH
approved by:	RH
QA/QC by:	RH
project no.:	020-1643A
drawing no.:	T_STM_0201643A
date:	01/17/2023

SHEET
13 of 34

DWG: F:\2020\1501-2000\020-1643-a\40-design\AutoCAD\final plans\Sheets\STORM DRAINAGE\T_STM_0201643A.dwg USER: ehall
DATE: Jan 17, 2023 9:25am XREFS: V_XTOPO_0201643 V_XBNDY_0201643 T_BASE_0201643A T_TBLK_0201643A
T_CORR_0201643A T_PATT_0201643A T_STRM_0201643A 404932-C-2D-SITE PLAN-P T_KEYM_0201643A

LEGEND

- GRADING/CONSTRUCTION LIMITS
- PROPOSED ASPHALT PAVEMENT
- PROPOSED CONCRETE
- PROPOSED GRAVEL

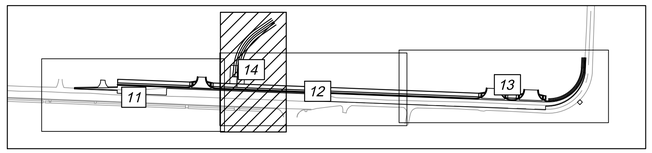

N

0' 10' 20' 40'
SCALE IN FEET

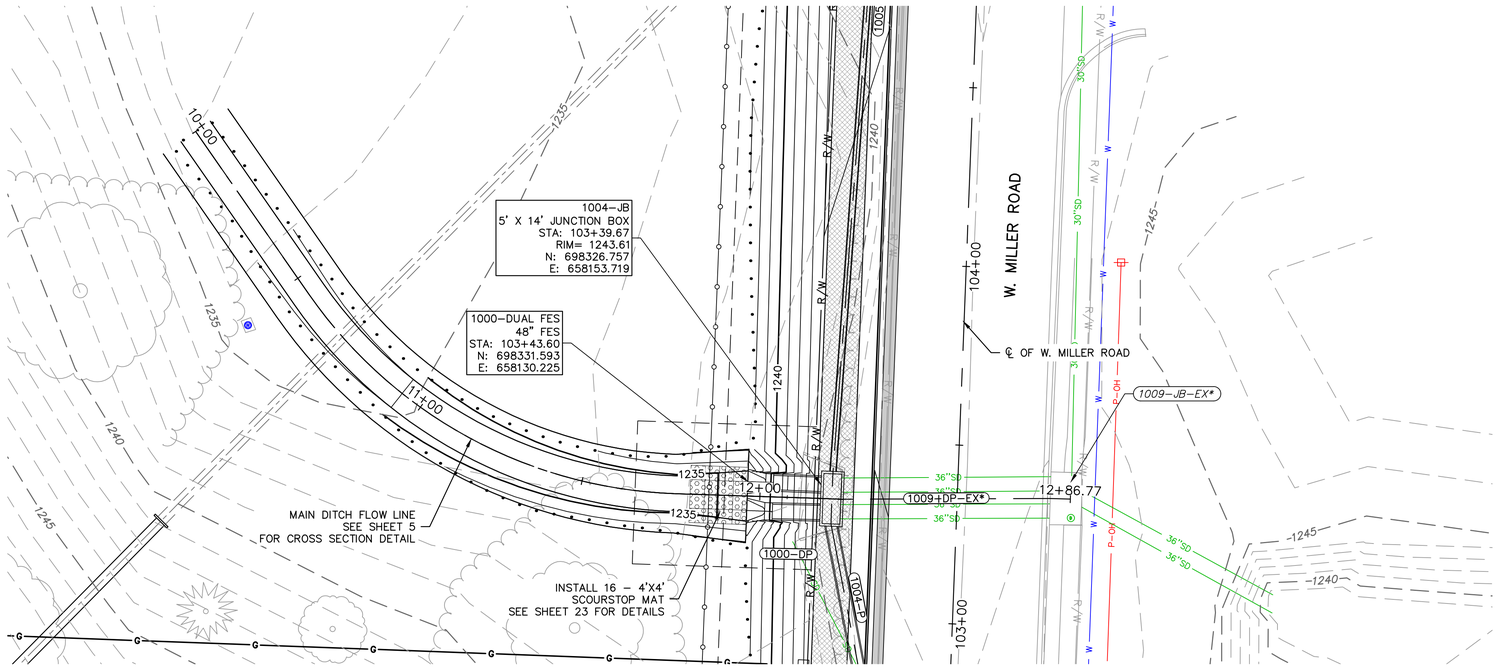

FL - MAIN DITCH (10+00 - 12+86.77)

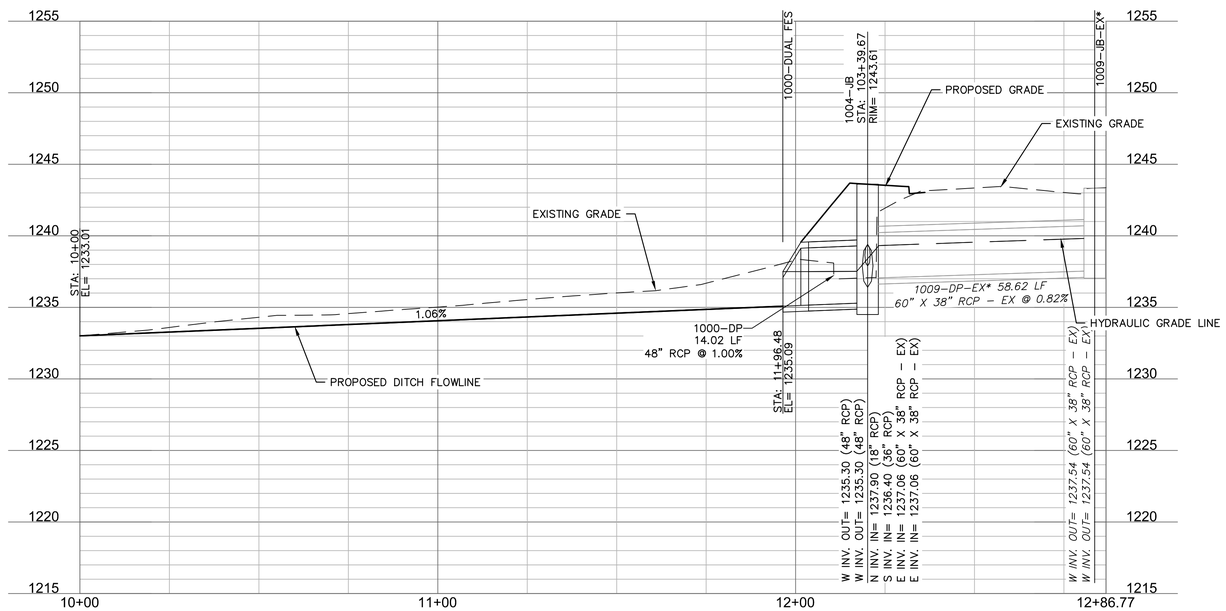

10'
5'
2.5'
0'

0' 10' 20' 40'
SCALE IN FEET

olsson
302 East Millsap Road
Fayetteville, AR 72703
TEL 479.443.3404
www.olsson.com

THIS DOCUMENT WAS ORIGINALLY ISSUED AND SEALED ON JANUARY 17, 2023 BY RICHARD D. HERRICK, A LICENSED PROFESSIONAL ENGINEER IN THE STATE OF ARKANSAS, E-19471

REVISIONS

REV. NO.	DATE	REVISIONS DESCRIPTION	BY

STORM DRAINAGE PLAN AND PROFILE

WEST MILLER ROAD IMPROVEMENTS

CITY OF SPRINGDALE, ARKANSAS

2023

drawn by:	SP
checked by:	EH
approved by:	RH
QA/QC by:	RH
project no.:	020-1643A
drawing no.:	T_STM_0201643A
date:	01/17/2023

SHEET
14 of 34

DWG: F:\2022\1501-2000\020-1643-a\40-design\AutoCAD\final plans\Sheets\STORM DRAINAGE\T_STM_0201643A.dwg USER: ehall
DATE: Jan 17, 2023 9:26am XREFS: V_XTOPO_0201643 V_XBNDY_0201643 T_BASE_0201643A T_TBLK_0201643A
T_CORR_0201643A T_PATT_0201643A T_STRM_0201643A 404932-C-2D-SITE PLAN-P T_KEYM_0201643A

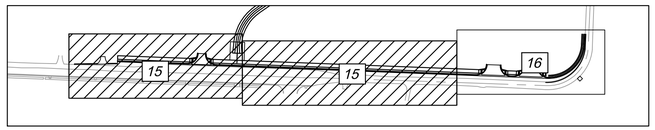

N

0' 10' 20' 40'
SCALE IN FEET

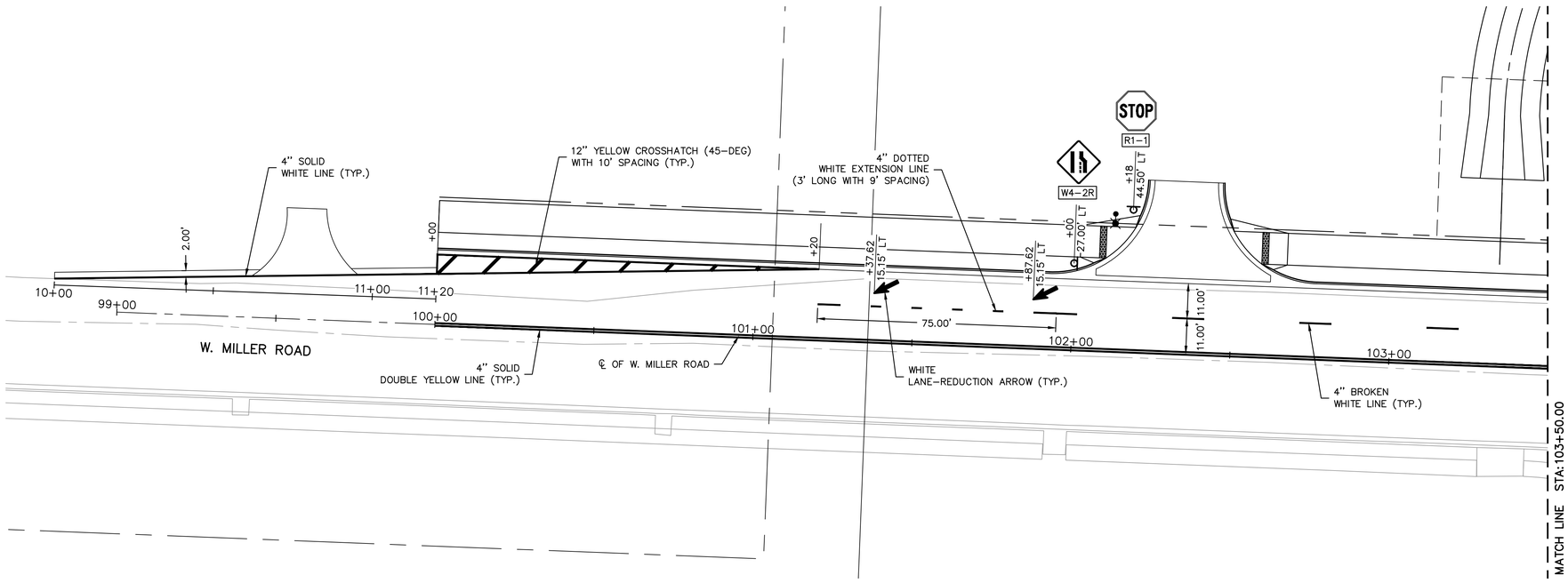

GENERAL NOTES:

1. CONTRACTOR SHALL FOLLOW CITY STANDARD DETAILS FOR PAVEMENT STRIPING AND CROSSWALKS.
2. CONTRACTOR SHALL FOLLOW APPLICABLE ARDOT STANDARD DETAILS FOR SIGN POSITIONING AND MOUNTING (SEE SHS-1 – SHS-8)
3. SIGNS MARKED FOR REMOVAL AND RESET SHALL BE INSTALLED ON NEW POST.
4. ALL EXISTING MARKING IN CONFLICT WITH NEW SHALL BE REMOVED.

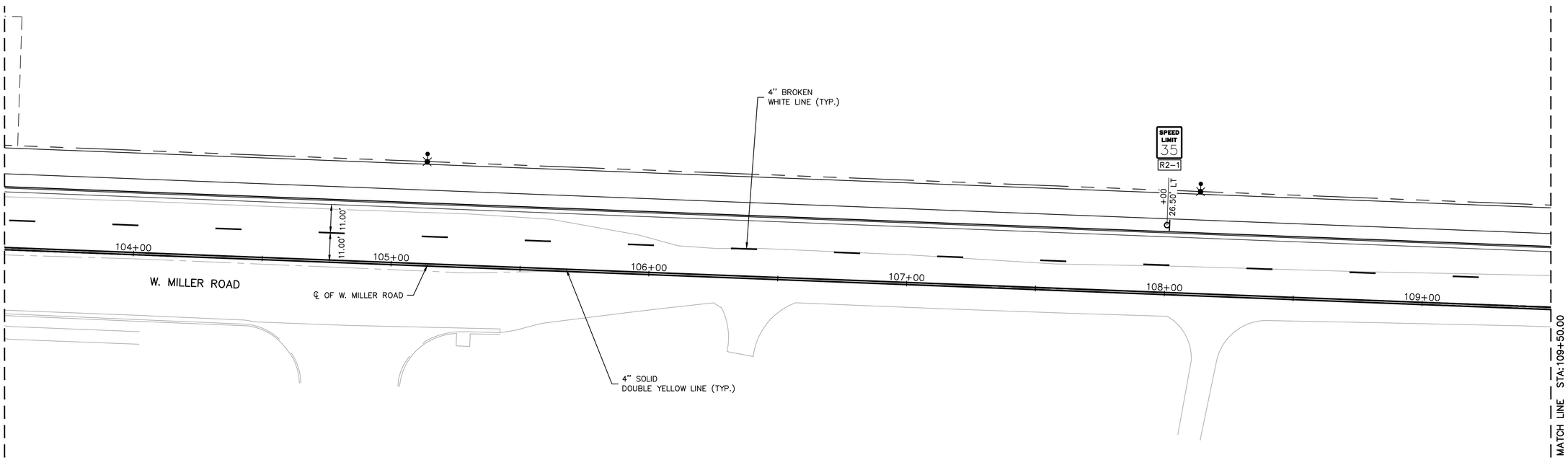

olsson
302 East Millsap Road
Fayetteville, AR 72703
TEL 479.443.3404
www.olsson.com

THIS DOCUMENT WAS ORIGINALLY ISSUED AND SEALED ON JANUARY 17, 2023 BY RICHARD D. HERRICK, A LICENSED PROFESSIONAL ENGINEER IN THE STATE OF ARKANSAS, E-19471

REV. NO.	DATE	REVISIONS DESCRIPTION	BY

REVISIONS

PAVEMENT MARKING AND SIGNING PLAN

WEST MILLER ROAD IMPROVEMENTS

CITY OF SPRINGDALE, ARKANSAS

2023

drawn by: SP
checked by: EH
approved by: RH
QA/QC by: RH
project no.: 020-1643A
drawing no.: T_SAS_0201643A
date: 01/17/2023

SHEET
15 of 34

DWG: F:\2022\1501-2000\020-1643-a\40-design\AutoCAD\final plans\Sheets\STRIPING AND SIGNAGE\T_SAS_0201643A.dwg USER: ehall
DATE: Jan 17, 2023 9:26am XREFS: T_TBLK_0201643A V_XTOPO_0201643 V_XBNDY_0201643 T_BASE_0201643A T_PATT_0201643A T_KEYM_0201643A T_PSAS_0201643A

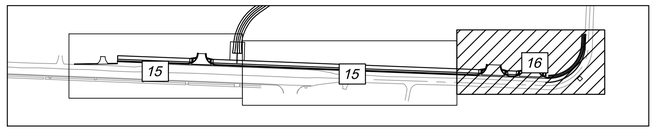

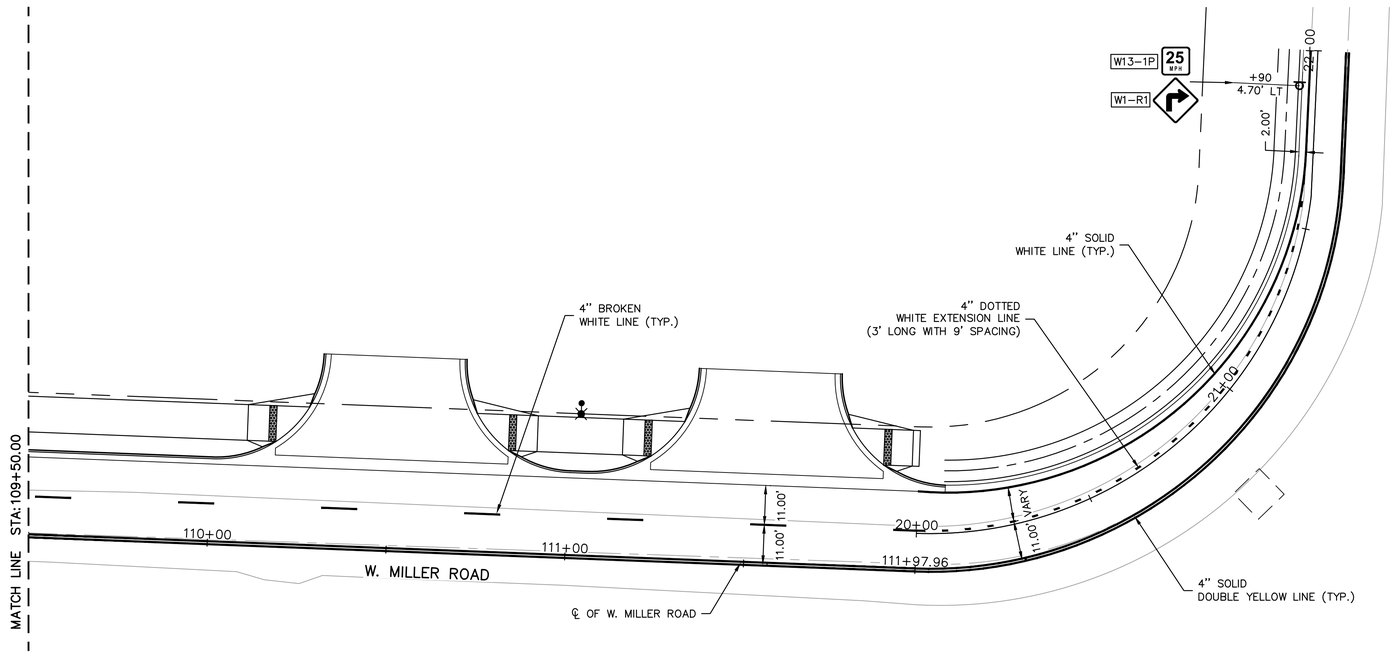

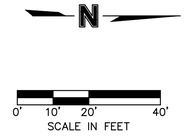

GENERAL NOTES:

1. CONTRACTOR SHALL FOLLOW CITY STANDARD DETAILS FOR PAVEMENT STRIPING AND CROSSWALKS.
2. CONTRACTOR SHALL FOLLOW APPLICABLE ARDOT STANDARD DETAILS FOR SIGN POSITIONING AND MOUNTING (SEE SHS-1 – SHS-8)
3. SIGNS MARKED FOR REMOVAL AND RESET SHALL BE INSTALLED ON NEW POST.
4. ALL EXISTING MARKING IN CONFLICT WITH NEW SHALL BE REMOVED.

olsson
302 East Millsap Road
Fayetteville, AR 72703
TEL 479.443.3404
www.olsson.com

THIS DOCUMENT WAS ORIGINALLY ISSUED AND SEALED ON JANUARY 17, 2023 BY RICHARD D. HERRICK, A LICENSED PROFESSIONAL ENGINEER IN THE STATE OF ARKANSAS, E-19471

REV. NO.	DATE	REVISIONS DESCRIPTION	BY

REVISIONS

PAVEMENT MARKING AND SIGNING PLAN

WEST MILLER ROAD IMPROVEMENTS

CITY OF SPRINGDALE, ARKANSAS

2023

drawn by: SP
checked by: EH
approved by: RH
QA/QC by: RH
project no.: 020-1643A
drawing no.: T_SAS_0201643A
date: 01/17/2023

SHEET
16 of 34

DWG: F:\2022\1501-2000\020-1643-a\40-design\AutoCAD\final plans\Sheets\STRIPING AND SIGNAGE\T_SAS_0201643A.dwg USER: ehall
DATE: Jan 17, 2023 9:26am XREFS: T_TBLK_0201643A V_XTOPO_0201643 V_XBNDY_0201643 T_BASE_0201643A T_KEYM_0201643A T_PSAS_0201643A T_PATT_0201643A

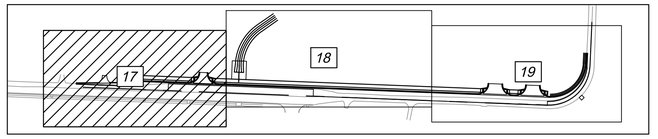

N
0' 100' 200'
SCALE IN FEET

N
0' 10' 20' 40'
SCALE IN FEET

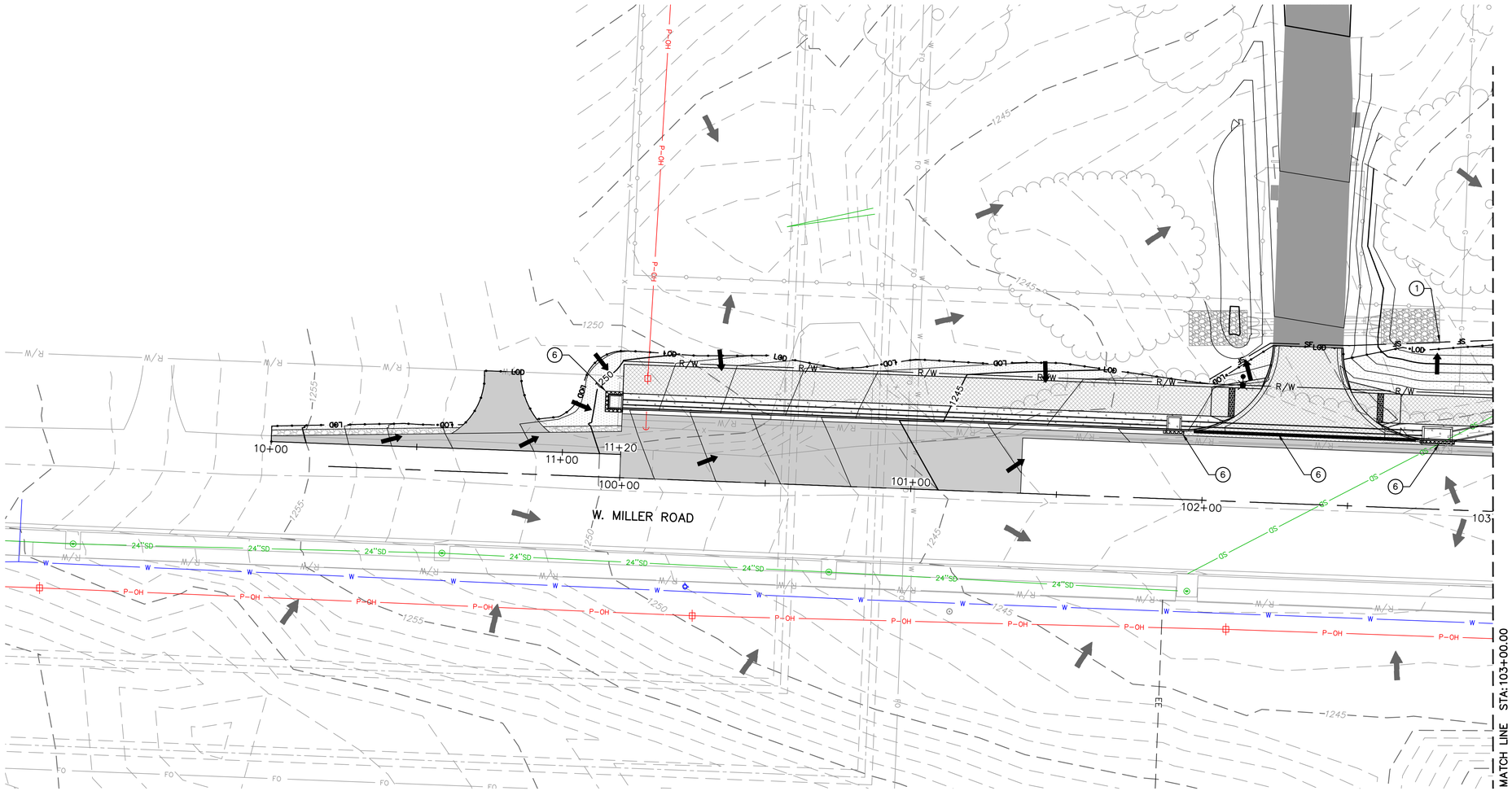

EROSION AND SEDIMENT CONTROL STAGING CHART

PROJECT STAGE	EROSION CONTROL PLAN BMP REFERENCE NO.	BMP DESCRIPTION	REMOVE AFTER STAGE	NOTES:
A – PRIOR TO LAND DISTURBANCE	N/A	STAGING AREA	PHASE C	SEE EROSION CONTROL NOTES FOR DETAILS.
	1	INSTALL SILT FENCE	PHASE D	INSTALL BIODEGRADABLE LOG AS INDICATED ON PLANS.
B – CLEARING & GRUBBING	N/A	STOCKPILE TOPSOIL	N/A	SEED STOCKPILE AREA AS SOON AS STOCKPILING ACTIVITIES HAVE CEASED.
	2	TEMPORARY CONSTRUCTION ENTRANCE	PHASE C	INSTALL AT INGRESS/EGRESS OF CONSTRUCTION SITE.
	3	CONCRETE WASHOUT	PHASE C	TO BE INSTALLED PRIOR TO POURING CONCRETE. SEED WASHOUT AREA AS SOON AS CONCRETE CONSTRUCTION HAS CEASED.
C – ROAD CONSTRUCTION	N/A	EROSION AND SEDIMENT CONTROL	N/A	PERFORM MAINTENANCE ON ALL EROSION CONTROL MEASURES FOR ALL PREVIOUS AS NECESSARY.
	4	INSTALL BIODEGRADABLE LOG DITCH CHECKS	PHASE D	INSTALL BIODEGRADABLE LOG DITCH CHECKS AS INDICATED ON PLANS
	5	INSTALL ROCK DITCH CHECKS	PHASE D	INSTALL ROCK DITCH CHECKS AS INDICATED ON PLANS
	6	INSTALL INLET PROTECTION	PHASE D	INSTALL INLET PROTECTION AS INDICATED ON PLANS
	7	INSTALL OUTLET PROTECTION	PHASE D	INSTALL OUTLET PROTCTION CHECKS AS INDICATED ON PLANS
	N/A	BEGIN GRADING FOR ROAD IMPROVEMENTS	N/A	SEE ROADWAY PLAN AND PROFILES FOR DETAILS
D – FINAL STABILIZATION	N/A	STREET CLEANING	N/A	SHOVELING, BROOMING, SWEEPING, AND/OR VACUUMING TO REMOVE TRACK-OUT OF SEDIMENT FROM PAVED PUBLIC ROADS
	N/A	ESTABLISH PERENNIAL VEGETATION	N/A	SEED OR SOD ALL DISTURBED AREAS.INSTALL AS INDICATED ON PLANS.

LEGEND

- XXXX — MAJOR CONTOUR
- XXXX — MINOR CONTOUR
- LOD — LIMITS OF DISTURBANCE
- SF — SILT FENCE
- PROPOSED FLOW DIRECTION
- EXISTING FLOW DIRECTION
- CONSTRUCTION ENTRANCE
- CONCRETE WASH-OUT
- INLET SEDIMENT PROTECTION
- CONSTRUCTION ENTRANCE SIGN
- ROCK DITCH CHECK
- SOD
- SEED

olsson
302 East Millsap Road
Fayetteville, AR 72703
TEL 479.443.3404
www.olsson.com

THIS DOCUMENT WAS ORIGINALLY ISSUED AND SEALED ON JANUARY 17, 2023 BY RICHARD D. HERRICK, A LICENSED PROFESSIONAL ENGINEER IN THE STATE OF ARKANSAS, E-19471

REV. NO.	DATE	REVISIONS DESCRIPTION	BY

REVISIONS

STORMWATER POLLUTION PREVENTION PLAN

WEST MILLER ROAD IMPROVEMENTS

2023

CITY OF SPRINGDALE, ARKANSAS

drawn by: SP
checked by: EH
approved by: RH
QA/QC by: RH
project no.: 020-1643A
drawing no.: T_SWP_0201643A
date: 01/17/2023

SHEET
17 of 34

DWG: F:\2020\1501-2000\020-1643-a\40-design\AutoCAD\final plans\Sheets\SWPPP\T_SWP_0201643A.dwg USER: ehall
DATE: Jan 17, 2023 9:28am XREFS: V_XTOPO_0201643 V_XBNDY_0201643 T_BASE_0201643A T_TBLK_0201643A T_KEYM_0201643A T_STRM_0201643A 404932-C-2D-SITE PLAN-P T_PATT_0201643A T_CORR_0201643A

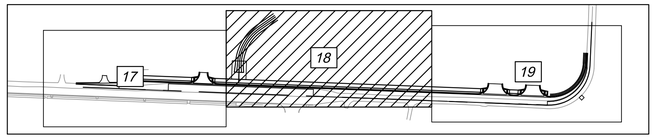

N
0' 100' 200'
SCALE IN FEET

N
0' 10' 20' 40'
SCALE IN FEET

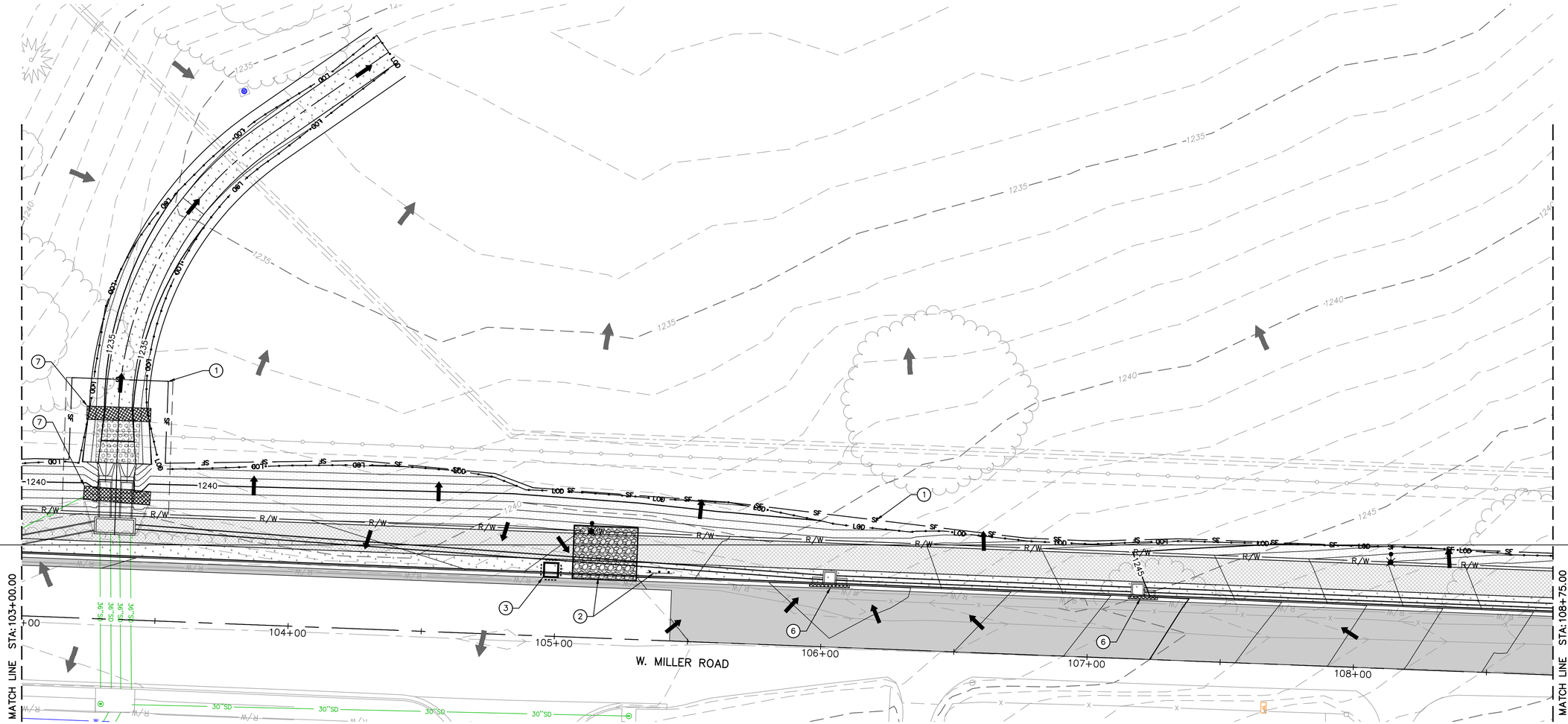

EROSION AND SEDIMENT CONTROL STAGING CHART

PROJECT STAGE	EROSION CONTROL PLAN BMP REFERENCE NO.	BMP DESCRIPTION	REMOVE AFTER STAGE	NOTES:
A – PRIOR TO LAND DISTURBANCE	N/A	STAGING AREA	PHASE C	SEE EROSION CONTROL NOTES FOR DETAILS.
	1	INSTALL SILT FENCE	PHASE D	INSTALL BIODEGRADABLE LOG AS INDICATED ON PLANS.
B – CLEARING & GRUBBING	N/A	STOCKPILE TOPSOIL	N/A	SEED STOCKPILE AREA AS SOON AS STOCKPILING ACTIVITIES HAVE CEASED.
	2	TEMPORARY CONSTRUCTION ENTRANCE	PHASE C	INSTALL AT INGRESS/EGRESS OF CONSTRUCTION SITE.
	3	CONCRETE WASHOUT	PHASE C	TO BE INSTALLED PRIOR TO POURING CONCRETE. SEED WASHOUT AREA AS SOON AS CONCRETE CONSTRUCTION HAS CEASED.
C – ROAD CONSTRUCTION	N/A	EROSION AND SEDIMENT CONTROL	N/A	PERFORM MAINTENANCE ON ALL EROSION CONTROL MEASURES FOR ALL PREVIOUS AS NECESSARY.
	4	INSTALL BIODEGRADABLE LOG DITCH CHECKS	PHASE D	INSTALL BIODEGRADABLE LOG DITCH CHECKS AS INDICATED ON PLANS
	5	INSTALL ROCK DITCH CHECKS	PHASE D	INSTALL ROCK DITCH CHECKS AS INDICATED ON PLANS
	6	INSTALL INLET PROTECTION	PHASE D	INSTALL INLET PROTECTION AS INDICATED ON PLANS
	7	INSTALL OUTLET PROTECTION	PHASE D	INSTALL OUTLET PROTCTION CHECKS AS INDICATED ON PLANS
	N/A	BEGIN GRADING FOR ROAD IMPROVEMENTS	N/A	SEE ROADWAY PLAN AND PROFILES FOR DETAILS
D – FINAL STABILIZATION	N/A	STREET CLEANING	N/A	SHOVELING, BROOMING, SWEEPING, AND/OR VACUUMING TO REMOVE TRACK–OUT OF SEDIMENT FROM PAVED PUBLIC ROADS
	N/A	ESTABLISH PERENNIAL VEGETATION	N/A	SEED OR SOD ALL DISTURBED AREAS.INSTALL AS INDICATED ON PLANS.

LEGEND

- XXXX — MAJOR CONTOUR
- XXXX — MINOR CONTOUR
- LOD — LIMITS OF DISTURBANCE
- SF — SILT FENCE
- PROPOSED FLOW DIRECTION
- EXISTING FLOW DIRECTION
- CONSTRUCTION ENTRANCE
- CONCRETE WASH–OUT
- INLET SEDIMENT PROTECTION
- CONSTRUCTION ENTRANCE SIGN
- ROCK DITCH CHECK
- SOD
- SEED

10'
5'
2.5'
0'

0' 10' 20' 40'
SCALE IN FEET

olsson
302 East Millsap Road
Fayetteville, AR 72703
TEL 479.443.3404
www.olsson.com

THIS DOCUMENT WAS ORIGINALLY ISSUED AND SEALED ON JANUARY 17, 2023 BY RICHARD D. HERRICK, A LICENSED PROFESSIONAL ENGINEER IN THE STATE OF ARKANSAS, E-19471

REV. NO.	DATE	REVISIONS DESCRIPTION	BY

REVISIONS

STORMWATER POLLUTION PREVENTION PLAN

WEST MILLER ROAD IMPROVEMENTS

2023

CITY OF SPRINGDALE, ARKANSAS

drawn by: SP
checked by: EH
approved by: RH
QA/QC by: RH
project no.: 020-1643A
drawing no.: T_SWP_0201643A
date: 01/17/2023

SHEET
18 of 34

DWG: F:\2020\1501-2000\020-1643-a\40-design\AutoCAD\final plans\Sheets\SWPPP\T_SWP_0201643A.dwg
DATE: Jan 17, 2023 9:28am
XREFS: V_XTOPO_0201643 V_XBNDY_0201643 T_BASE_0201643A
USER: ehall
T_TBLK_0201643A T_STRM_0201643A T_KEYM_0201643A T_CORR_0201643A T_PATT_0201643A

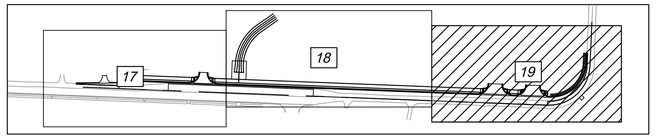

N
0' 100' 200'
SCALE IN FEET

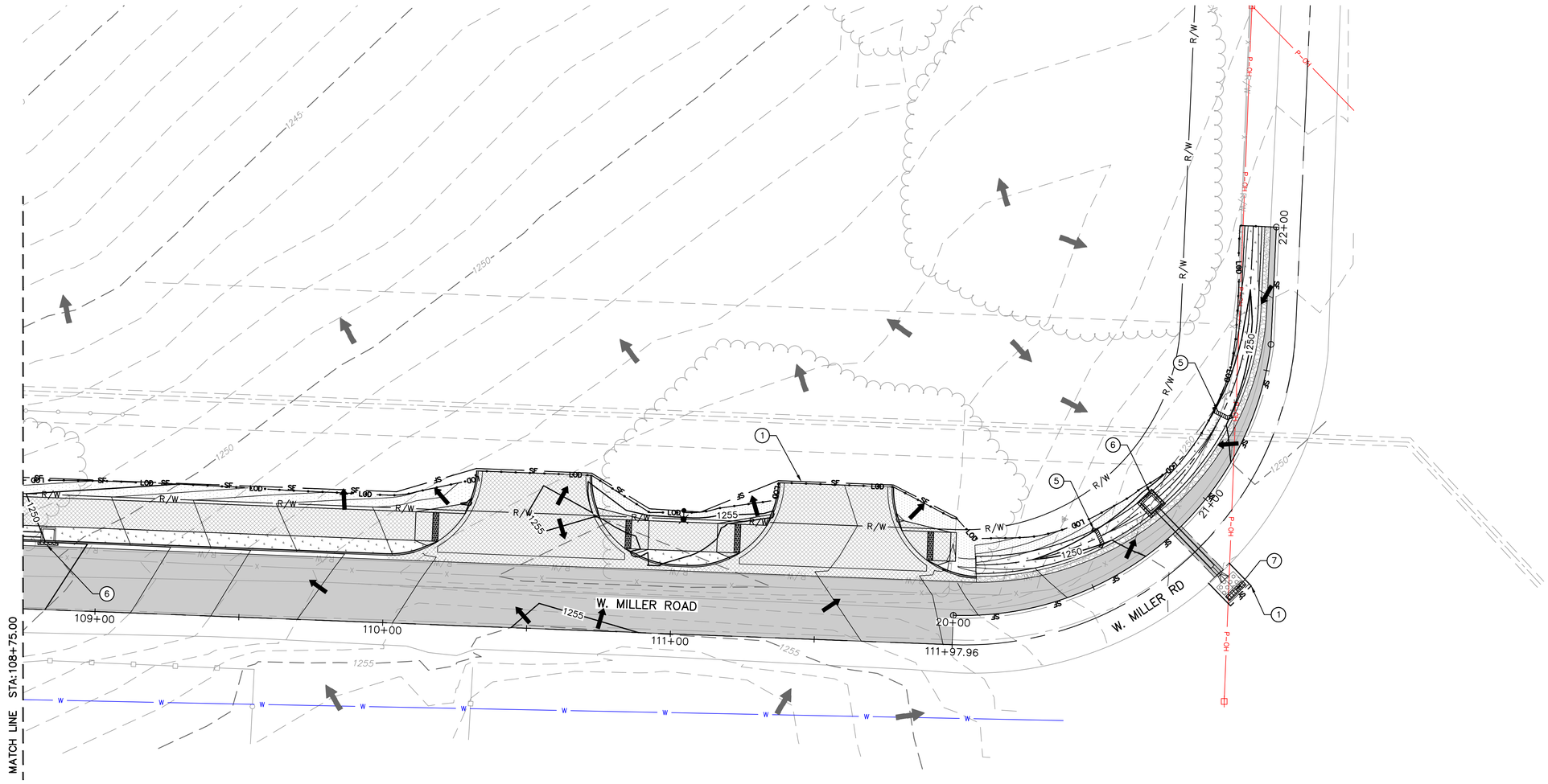

N
0' 10' 20' 40'
SCALE IN FEET

EROSION AND SEDIMENT CONTROL STAGING CHART				
PROJECT STAGE	EROSION CONTROL PLAN BMP REFERENCE NO.	BMP DESCRIPTION	REMOVE AFTER STAGE	NOTES:
A – PRIOR TO LAND DISTURBANCE	N/A	STAGING AREA	PHASE C	SEE EROSION CONTROL NOTES FOR DETAILS.
	1	INSTALL SILT FENCE	PHASE D	INSTALL BIODEGRADABLE LOG AS INDICATED ON PLANS.
B – CLEARING & GRUBBING	N/A	STOCKPILE TOPSOIL	N/A	SEED STOCKPILE AREA AS SOON AS STOCKPILING ACTIVITIES HAVE CEASED.
	2	TEMPORARY CONSTRUCTION ENTRANCE	PHASE C	INSTALL AT INGRESS/EGRESS OF CONSTRUCTION SITE.
	3	CONCRETE WASHOUT	PHASE C	TO BE INSTALLED PRIOR TO POURING CONCRETE. SEED WASHOUT AREA AS SOON AS CONCRETE CONSTRUCTION HAS CEASED.
C – ROAD CONSTRUCTION	N/A	EROSION AND SEDIMENT CONTROL	N/A	PERFORM MAINTENANCE ON ALL EROSION CONTROL MEASURES FOR ALL PREVIOUS AS NECESSARY.
	4	INSTALL BIODEGRADABLE LOG DITCH CHECKS	PHASE D	INSTALL BIODEGRADABLE LOG DITCH CHECKS AS INDICATED ON PLANS
	5	INSTALL ROCK DITCH CHECKS	PHASE D	INSTALL ROCK DITCH CHECKS AS INDICATED ON PLANS
	6	INSTALL INLET PROTECTION	PHASE D	INSTALL INLET PROTECTION AS INDICATED ON PLANS
	7	INSTALL OUTLET PROTECTION	PHASE D	INSTALL OUTLET PROTCTION CHECKS AS INDICATED ON PLANS
	N/A	BEGIN GRADING FOR ROAD IMPROVEMENTS	N/A	SEE ROADWAY PLAN AND PROFILES FOR DETAILS
D – FINAL STABILIZATION	N/A	STREET CLEANING	N/A	SHOVELING, BROOMING, SWEEPING, AND/OR VACUUMING TO REMOVE TRACK–OUT OF SEDIMENT FROM PAVED PUBLIC ROADS
	N/A	ESTABLISH PERENNIAL VEGETATION	N/A	SEED OR SOD ALL DISTURBED AREAS.INSTALL AS INDICATED ON PLANS.

LEGEND

- XXXX — MAJOR CONTOUR
- XXXX — MINOR CONTOUR
- LOD — LIMITS OF DISTURBANCE
- SF — SILT FENCE
- PROPOSED FLOW DIRECTION
- EXISTING FLOW DIRECTION
- CONSTRUCTION ENTRANCE
- CONCRETE WASH–OUT
- INLET SEDIMENT PROTECTION
- CONSTRUCTION ENTRANCE SIGN
- ROCK DITCH CHECK
- SOD
- SEED

olsson
302 East Millsap Road
Fayetteville, AR 72703
TEL 479.443.3404
www.olsson.com

THIS DOCUMENT WAS ORIGINALLY ISSUED AND SEALED ON JANUARY 17, 2023 BY RICHARD D. HERRICK, A LICENSED PROFESSIONAL ENGINEER IN THE STATE OF ARKANSAS, E-19471

REV. NO.	DATE	REVISIONS DESCRIPTION	BY

REVISIONS

STORMWATER POLLUTION PREVENTION PLAN

WEST MILLER ROAD IMPROVEMENTS

2023

CITY OF SPRINGDALE, ARKANSAS

drawn by: SP
checked by: EH
approved by: RH
QA/QC by: RH
project no.: 020-1643A
drawing no.: T_SWP_0201643A
date: 01/17/2023

SHEET
19 of 34

DWG: F:\2020\1501-2000\020-1643-a\40-design\AutoCAD\final plans\Sheets\SWPPP\T_SWP_0201643A.dwg
DATE: Jan 17, 2023 9:28am
XREFS: V_XTOPO_0201643 V_XBNDY_0201643 T_BASE_0201643A
USER: ehall T_TBLK_0201643A
T_CORR_0201643A T_STRM_0201643A 404932-C-2D-SITE PLAN-P T_KEYM_0201643A T_PATT_0201643A

DWG: F:\2020\1501-2000\020-1643-a\40-design\AutoCAD\final plans\Sheets\DETAILS\T_DTL01_0201643A.dwg USER: ehall
DATE: Jan 17, 2023 9:29am XREFS: T_TBLK_0201643A

N:\Engineering_WEBSITE MATERIALS\Standard Details\DWG\SD-A-5.dwg

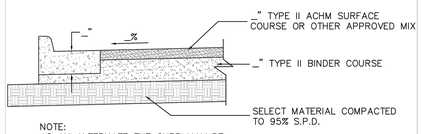

NOTE:
AS AN ALTERNATE THE CURB MAY BE PLACED DIRECTLY ON THE SUBGRADE

FULL DEPTH ASPHALT SECTION
NOT TO SCALE

Note To Engineers:
Paving depth to be per ordinance or formal design.

The City of Springdale's Standard Details are minimum requirements for construction in Springdale. Use of these details for any construction project must be reviewed, approved and plans sealed by an Arkansas Registered Professional Engineer.

STANDARD DETAILS FOR STREET & DRAINAGE CONSTRUCTION	DATE: OCTOBER 2018 DESIGNED BY: STAFF DRAWN BY: STAFF	SPRINGDALE WE'RE MAKING IT HAPPEN
SECTION A TYPICAL STREET SECTIONS & DETAILS	FILE NO. SD-A-5	

N:\Engineering_WEBSITE MATERIALS\Standard Details\DWG\SD-A-12.dwg

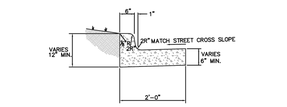

STANDARD CURB AND GUTTER
NOT TO SCALE

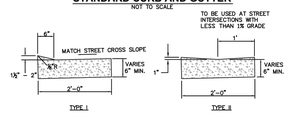

MODIFIED CURB AND GUTTER
NOT TO SCALE

NOTES:
1. CONCRETE FOR CURB AND GUTTER TO BE CLASS A, 3000 PSI, 5.5 BAG MIX WITH 4-7 % AIR ENTRAINMENT.
2. ALL CURB AND GUTTER SHALL HAVE A BROOMED FINISH UNLESS OTHERWISE SPECIFIED.
3. MODIFIED CURB (TYPE I) SHALL BE PLACE ACROSS ALL DRIVEWAY ENTRANCES.
4. MODIFIED CURB (TYPE II) SHALL BE PLACED ACROSS ALL SIDE STREETS WHERE THE LONGITUDINAL GRADE IS LESS THAN 1%.
5. SAW CUT JOINTS AT 15' O.C. SEAL WITH ONE PART COLD APPLIED SILICONE JOINT SEALER OR OTHER APPROVED SEALANT. ALL JOINTS TO BE SEALED PRIOR TO FINAL ASPHALT PLACEMENT.
6. PROVIDE 1/2" PREFORMED EXPANSION JOINT MATERIAL (ASPHALT IMPREGNATED FIBERBOARD OR OTHER APPROVED MATERIAL) AT STATIONARY STRUCTURES, (DROP INLETS, END OF CURBS, DRIVEWAYS – SEE DETAIL) OR AS DIRECTED BY ENGINEER.

The City of Springdale's Standard Details are minimum requirements for construction in Springdale. Use of these details for any construction project must be reviewed, approved and plans sealed by an Arkansas Registered Professional Engineer.

STANDARD DETAILS FOR STREET & DRAINAGE CONSTRUCTION	DATE: OCTOBER 2018 DESIGNED BY: STAFF DRAWN BY: STAFF	SPRINGDALE WE'RE MAKING IT HAPPEN
SECTION A TYPICAL STREET SECTIONS & DETAILS	FILE NO. SD-A-12	

N:\Engineering_WEBSITE MATERIALS\Standard Details\DWG\SD-B-1.dwg

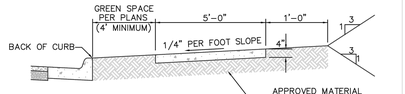

NOTES:

1. ½" ASPHALT IMPREGNATED W/ FIBERBOARD EXPANSION MATERIAL CONFORMING TO AASHTO M213 IS TO BE PLACED AT ALL DRIVEWAYS, AT MAXIMUM 200' INTERVALS, OR AS DIRECTED BY ENGINEER.
2. TRANSVERSE JOINTS TO BE PLACED AT 5' INTERVALS PERPENDICULAR TO SIDEWALK.
3. SAWED JOINTS SHALL BE USED INSTEAD OF TOOLED JOINTS. ALL SAWED JOINTS SHALL BE SEALED USING AN APPROVED SEALANT.
4. OTHER JOINTS MAY BE REQUIRED IF DIRECTED BY THE ENGINEER.
5. CONCRETE FOR SIDEWALK TO BE CLASS A, 3000 PSI, 5.5 BAG MIX W/ 4-7% AIR ENTRAINMENT.

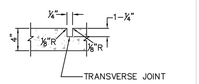

SIDEWALK DETAIL
NOT TO SCALE

The City of Springdale's Standard Details are minimum requirements for construction in Springdale. Use of these details for any construction project must be reviewed, approved and plans sealed by an Arkansas Registered Professional Engineer.

STANDARD DETAILS FOR STREET & DRAINAGE CONSTRUCTION	DATE: OCTOBER 2018 DESIGNED BY: STAFF DRAWN BY: STAFF	SPRINGDALE WE'RE MAKING IT HAPPEN
SECTION B TYPICAL STREET, DRIVEWAY & SIDEWALK DETAILS	FILE NO. SD-B-1	

N:\Engineering_WEBSITE MATERIALS\Standard Details\DWG\SD-B-2.dwg

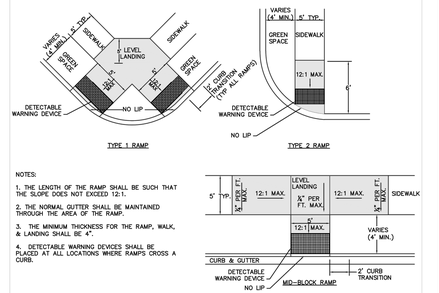

NOTES:

1. THE LENGTH OF THE RAMP SHALL BE SUCH THAT THE SLOPE DOES NOT EXCEED 12:1.
2. THE NORMAL GUTTER SHALL BE MAINTAINED THROUGH THE AREA OF THE RAMP.
3. THE MINIMUM THICKNESS FOR THE RAMP, WALK, & LANDING SHALL BE 4".
4. DETECTABLE WARNING DEVICES SHALL BE PLACED AT ALL LOCATIONS WHERE RAMPS CROSS A CURB.

HANDICAP RAMP DETAILS
NOT TO SCALE

The City of Springdale's Standard Details are minimum requirements for construction in Springdale. Use of these details for any construction project must be reviewed, approved and plans sealed by an Arkansas Registered Professional Engineer.

STANDARD DETAILS FOR STREET & DRAINAGE CONSTRUCTION	DATE: OCTOBER 2018 DESIGNED BY: STAFF DRAWN BY: STAFF	SPRINGDALE WE'RE MAKING IT HAPPEN
SECTION B TYPICAL STREET, DRIVEWAY & SIDEWALK DETAILS	FILE NO. SD-B-2	

N:\Engineering_WEBSITE MATERIALS\Standard Details\DWG\SD-B-3.dwg

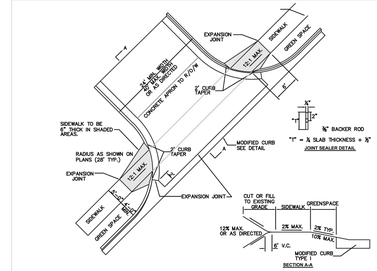

1. DRIVEWAY TO BE CONSTRUCTED TO THE RADIUS TANGENT POINTS AND ALSO TO STREET R/W AS DIRECTED, IF NEEDED.
2. 1/2" PREFORMED EXPANSION MATERIAL CONFORMING TO AASHTO M213, ASTM0-1752, TYPE 1 OR REDWOOD SHALL BE PLACED AS SHOWN, OR AS DIRECTED BY THE ENGINEER.
3. CONCRETE CURB TO BE SAWCUT AT 15' INTERVALS PERPENDICULAR TO THE GUTTER LINE AND SEALED SEE DETAIL.
4. HANDICAP RAMP COMPLYING WITH A.D.A. REQUIREMENTS TO BE CONSTRUCTED AT ALL COMMERCIAL DRIVEWAYS.
5. CONTRACTION JOINTS TO BE PLACED IN CONCRETE DRIVEWAY SO THAT NO SLAB DIMENSION IS MORE THAN 15'.
6. DRIVEWAY SECTION TO BE 6" PORTLAND CEMENT CONCRETE (3,500 P.S.I.) WITH 6" AGGREGATE BASE COURSE UNLESS OTHERWISE SPECIFIED.
7. CONCRETE APRONS SHALL HAVE 10' SAWCUTS IN EACH DIRECTION (BOTH HORIZONTAL AND VERTICAL).
8. INDUSTRIAL DRIVES SHOULD INCREASE RADIUS AT DRIVEWAY ENTRANCES TO 50-FT.

COMMERCIAL DRIVEWAY DETAIL
NOT TO SCALE

The City of Springdale's Standard Details are minimum requirements for construction in Springdale. Use of these details for any construction project must be reviewed, approved and plans sealed by an Arkansas Registered Professional Engineer.

STANDARD DETAILS FOR STREET & DRAINAGE CONSTRUCTION	DATE: OCTOBER 2018 DESIGNED BY: STAFF DRAWN BY: STAFF	SPRINGDALE WE'RE MAKING IT HAPPEN
SECTION B TYPICAL STREET, DRIVEWAY & SIDEWALK DETAILS	FILE NO. SD-B-3	

N:\Engineering_WEBSITE MATERIALS\Standard Details\DWG\SD-B-4.dwg

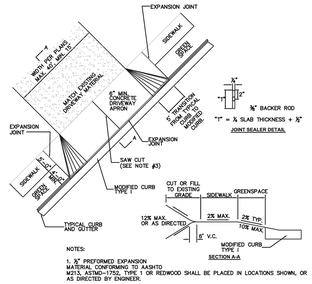

NOTES:

1. ½" PREFORMED EXPANSION MATERIAL CONFORMING TO AASHTO M213, ASTM0-1752, TYPE 1 OR REDWOOD SHALL BE PLACED IN LOCATIONS SHOWN, OR AS DIRECTED BY ENGINEER.
2. DRIVEWAY SECTION BEHIND APRON SHALL BE 6" AGGREGATE BASE COURSE FOR EXISTING GRAVEL DRIVES, OR 2" ASPHALT W/ 4" AGGREGATE BASE COURSE FOR EXISTING ASPHALT DRIVES, OR 6" CONCRETE FOR EXISTING CONCRETE DRIVES TO MATCH EXISTING D/W SURFACE MATERIAL.
3. CONCRETE DRIVEWAY APRON TO BE SAWCUT AT 15' INTERVALS AS SHOWN, AND FILLED WITH APPROVED JOINT SEALER (SEE DETAIL).
4. CONCRETE DRIVEWAYS TO BE CLASS A, 3000 PSI, 5.5 BAG MIX WITH 4-7% AIR ENTRAINMENT.

RESIDENTIAL DRIVEWAY DETAIL
NOT TO SCALE

The City of Springdale's Standard Details are minimum requirements for construction in Springdale. Use of these details for any construction project must be reviewed, approved and plans sealed by an Arkansas Registered Professional Engineer.

STANDARD DETAILS FOR STREET & DRAINAGE CONSTRUCTION	DATE: OCTOBER 2018 DESIGNED BY: STAFF DRAWN BY: STAFF	SPRINGDALE WE'RE MAKING IT HAPPEN
SECTION B TYPICAL STREET, DRIVEWAY & SIDEWALK DETAILS	FILE NO. SD-B-4	

N:\Engineering_WEBSITE MATERIALS\Standard Details\DWG\SD-B-5A.dwg

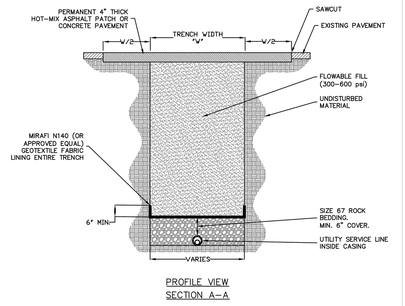

PROFILE VIEW
SECTION A–A

ASPHALT STREET CUT (TRENCH) REPAIR
N.T.S.

The City of Springdale's Standard Details are minimum requirements for construction in Springdale. Use of these details for any construction project must be reviewed, approved and plans sealed by an Arkansas Registered Professional Engineer.

STANDARD DETAILS FOR STREET & DRAINAGE CONSTRUCTION	DATE: OCTOBER 2018 DESIGNED BY: STAFF DRAWN BY: STAFF	SPRINGDALE WE'RE MAKING IT HAPPEN
SECTION B TYPICAL STREET, DRIVEWAY & SIDEWALK DETAILS	FILE NO. SD-B-5A	

olsson
302 East Millsap Road
Fayetteville, AR 72703
TEL 479.443.3404
www.olsson.com

THIS DOCUMENT WAS ORIGINALLY ISSUED AND SEALED ON JANUARY 17, 2023 BY RICHARD D. HERRICK, A LICENSED PROFESSIONAL ENGINEER IN THE STATE OF ARKANSAS, E-19471

REVISIONS

REV.: NO.	DATE	REVISIONS DESCRIPTION	BY

STANDARD DETAILS
STREET, CURB, DRIVEWAY, SIDEWALK AND HANDICAP RAMP

WEST MILLER ROAD IMPROVEMENTS

CITY OF SPRINGDALE, ARKANSAS

2023

drawn by: SP
checked by: EH
approved by: RH
QA/QC by: RH
project no.: 020-1643A
drawing no.: T_DTL01_0201643A
date: 01/17/2023

DWG: F:\2020\1501-2000\020-1643-a\40-design\AutoCAD\final plans\Sheets\DETAILS\T_DTL01_0201643A.dwg USER: ehall
DATE: Jan 17, 2023 9:29am XREFS: T_TBLK_0201643A 013 - CHECK DAM DETAIL 01 - CONC WASHOUT 02 - CONST ENTRANCE 05 - CURB INLET PROTECTION 10 - TREE PROTECTION 016 - SILT FENCE 017 - TEMPORARY TRAFFIC CONTROL

N:\Engineering_WEBSITE MATERIALS\Standard Details\DWG\SD-D-4.dwg

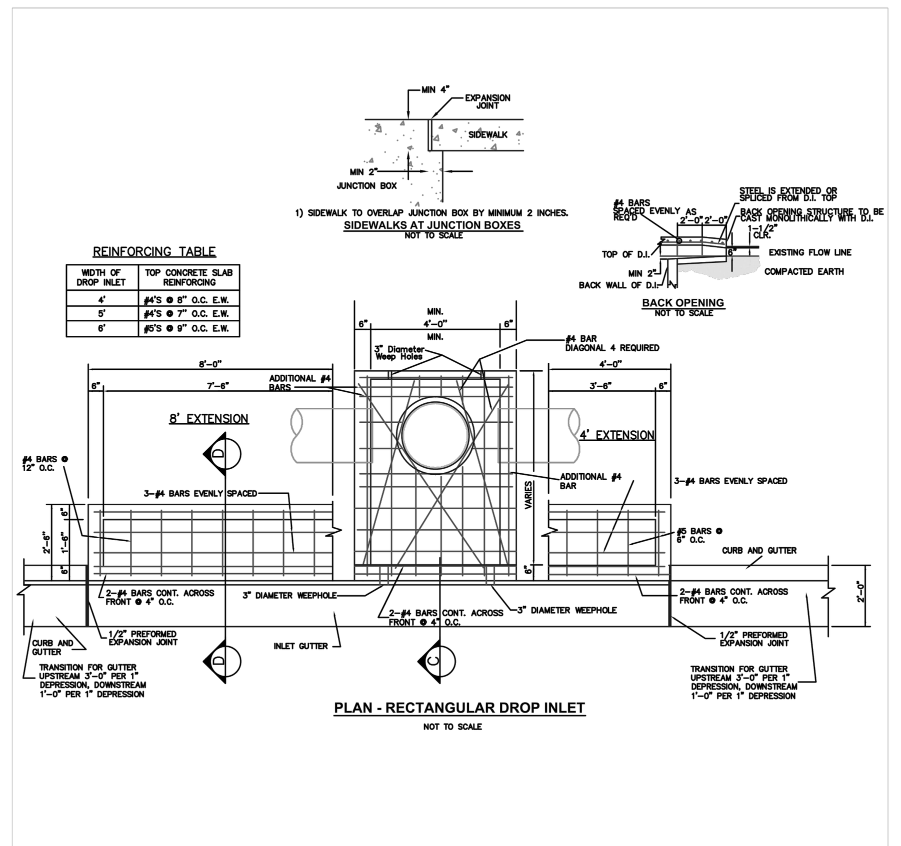

The City of Springdale's Standard Details are minimum requirements for construction in Springdale. Use of these details for any construction project must be reviewed, approved and plans sealed by an Arkansas Registered Professional Engineer.

STANDARD DETAILS FOR STREET & DRAINAGE CONSTRUCTION
SECTION D DROP INLET DETAILS
DATE: OCTOBER 2018
DESIGNED BY: STAFF
DRAWN BY: STAFF
FILE NO. SD-D-4
SPRINGDALE WE'RE MAKING IT HAPPEN

N:\Engineering_WEBSITE MATERIALS\Standard Details\DWG\SD-D-5.dwg

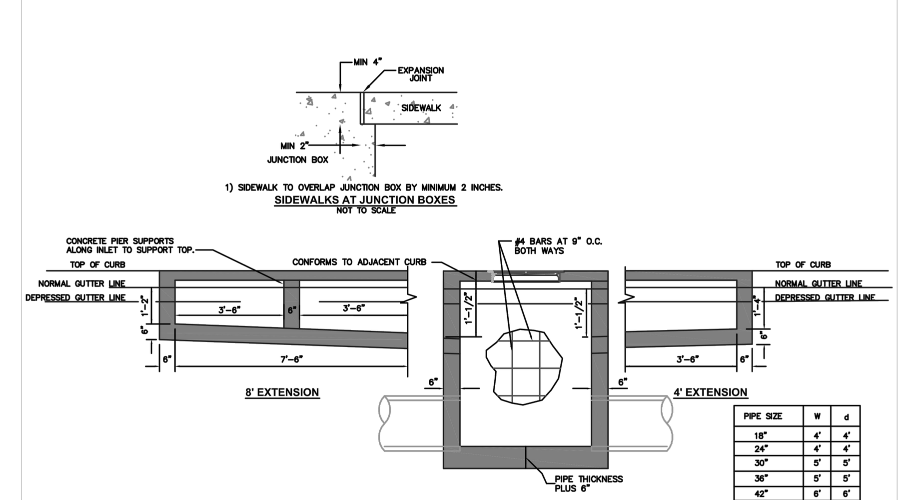

PIPE SIZE	W	d
18"	4'	4'
24"	4'	4'
30"	5'	5'
36"	5'	5'
42"	6'	6'
48"	6'	6'

NOTES:
1.) ALL EXPOSED CORNERS TO HAVE 3/4"" CHAMFER.
2.) ALL REINFORCEMENT BARS SHALL BE GRADE 60 AND SHALL HAVE A MINIMUM 1-1/2" COVER UNLESS OTHERWISE NOTED.
3.) CURB INLET BACK OPENING LOCATIONS SHALL BE DETERMINED IN THE FIELD BY THE ENGINEER.
4.) WHEN AN INLET IS PLACED ADJACENT TO CONCRETE PAVEMENT THE GUTTER DEPRESSION SHALL BE FORMED IN CONCRETE PAVEMENT.
5.) PIPES MAY ENTER BOX FROM ANY ANGLE OR ELEVATION AS DIRECTED BY THE ENGINEER. REINFORCING BARS SHALL BE CUT TO CLEAR PIPE BY 1-1/2"
6.) THE EXPANSION JOINT SHALL HAVE A THICKNESS OF ONE-HALF INCH AND CONFORM TO AASHTO M213.
7.) ALL REINFORCEMENT BARS SHALL BE GRADE 60 AND SHALL HAVE A MINIMUM OF 1-1/2" COVER UNLESS OTHERWISE NOTED.
8.) REFER TO PLAN AND PROFILE SHEETS TO DETERMINE EXTENSIONS AND SIZE (IF ANY) ACCOMPANYING DROP INLET.
9.) EXTENSIONS WITH LENGTHS DESIGNATED ON THE PLANS EXCEEDING 8'-0" SHALL HAVE THE SAME INSIDE DEPTH DIMENSIONS AS STATED ON DETAILS UNLESS OTHERWISE NOTED.
10.) CONCRETE FOR RECTANGULAR DROP INLETS SHALL BE CLASS A, 3000 PSI, 5.5 BAG MIX WITH 4-7% AIR ENTRAINMENT.

SECTION - RECTANGULAR DROP INLET
NOT TO SCALE

The City of Springdale's Standard Details are minimum requirements for construction in Springdale. Use of these details for any construction project must be reviewed, approved and plans sealed by an Arkansas Registered Professional Engineer.

STANDARD DETAILS FOR STREET & DRAINAGE CONSTRUCTION
SECTION D DROP INLET DETAILS
DATE: OCTOBER 2018
DESIGNED BY: STAFF
DRAWN BY: STAFF
FILE NO. SD-D-5
SPRINGDALE WE'RE MAKING IT HAPPEN

N:\Engineering_WEBSITE MATERIALS\Standard Details\DWG\SD-D-6.dwg

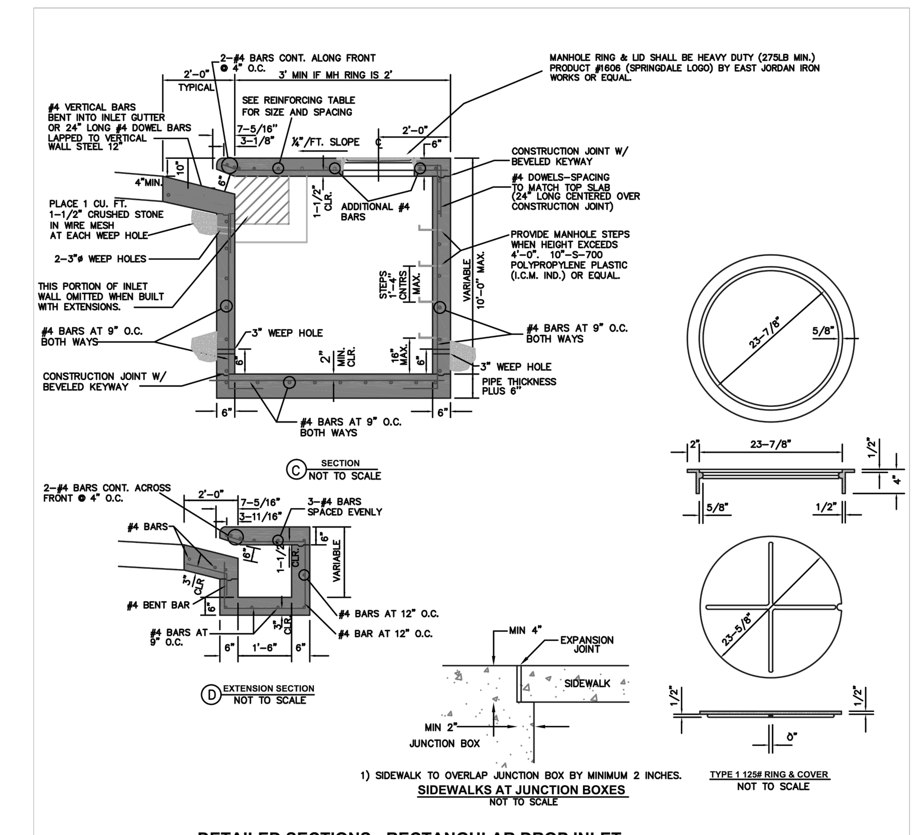

DETAILED SECTIONS - RECTANGULAR DROP INLET
NOT TO SCALE

The City of Springdale's Standard Details are minimum requirements for construction in Springdale. Use of these details for any construction project must be reviewed, approved and plans sealed by an Arkansas Registered Professional Engineer.

STANDARD DETAILS FOR STREET & DRAINAGE CONSTRUCTION
SECTION D DROP INLET DETAILS
DATE: OCTOBER 2018
DESIGNED BY: STAFF
DRAWN BY: STAFF
FILE NO. SD-D-6
SPRINGDALE WE'RE MAKING IT HAPPEN

C:\Users\kristifierpa\appdata\local\temp\AcPublish_6624\SD-D-7.dwg

PIPE SIZE	W	d
18"	4'	4'
24"	4'	4'
30"	5'	5'
36"	5'	5'
42"	6'	6'
48"	6'	6'

REINFORCING TABLE

WIDTH OF DROP INLET	TOP CONCRETE SLAB REINFORCING
4'	#4'S @ 8" O.C. E.W.
5'	#4'S @ 7" O.C. E.W.
6'	#5'S @ 9" O.C. E.W.

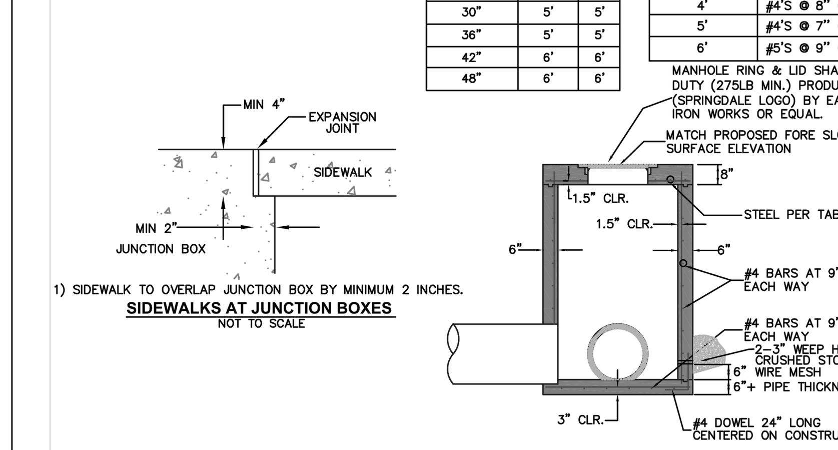

NOTES:
1. PIPES MAY ENTER BOX FROM ANY ANGLE OR ELEVATION AS APPROVED BY ENGINEER.
2. REINFORCING BARS SHALL BE CUT TO CLEAR PIPE BY 1-1/2".
3. PROVIDE 3/4" CHAMFER ON ALL EXPOSED CORNERS.
4. ALL REINFORCING BARS SHALL HAVE 1-1/2" MINIMUM COVER.
5. PLASTIC COATED STEPS SHALL BE INSTALLED IN ALL JUNCTION BOXES 4'- 0" IN DEPTH OR GREATER.
6. EXTENSION LENGTHS SHOWN ON THE PLANS SHALL BE TAKEN TO MEAN CLEAR OPENING LENGTH, NOT INCLUDING WIDTHS OF SUPPORTS.
7. CONCRETE FOR JUNCTION BOXES TO BE CLASS A, 3000 PSI, 5.5 BAG MIX WITH 4-7% AIR ENTRAINMENT.

TYPICAL JUNCTION BOX
NOT TO SCALE

The City of Springdale's Standard Details are minimum requirements for construction in Springdale. Use of these details for any construction project must be reviewed, approved and plans sealed by an Arkansas Registered Professional Engineer.

STANDARD DETAILS FOR STREET & DRAINAGE CONSTRUCTION
SECTION D DROP INLET DETAILS
DATE: OCTOBER 2018
DESIGNED BY: STAFF
DRAWN BY: STAFF
FILE NO. SD-D-7
SPRINGDALE WE'RE MAKING IT HAPPEN

C:\Users\kristifierpa\appdata\local\temp\AcPublish_6624\SD-D-8.dwg

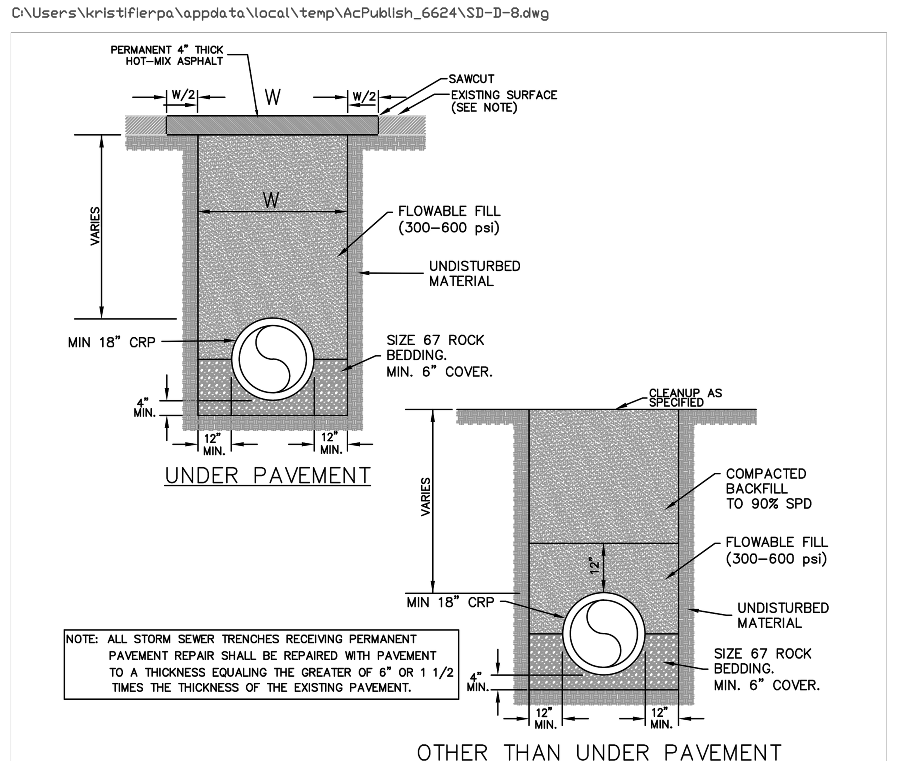

STORM SEWER BEDDING AND BACKFILL
NOT TO SCALE

The City of Springdale's Standard Details are minimum requirements for construction in Springdale. Use of these details for any construction project must be reviewed, approved and plans sealed by an Arkansas Registered Professional Engineer.

STANDARD DETAILS FOR STREET & DRAINAGE CONSTRUCTION
SECTION D DROP INLET DETAILS
DATE: OCTOBER 2018
DESIGNED BY: STAFF
DRAWN BY: STAFF
FILE NO. SD-D-8
SPRINGDALE WE'RE MAKING IT HAPPEN

N:\Engineering_WEBSITE MATERIALS\Standard Details\DWG\SD-E-2.dwg

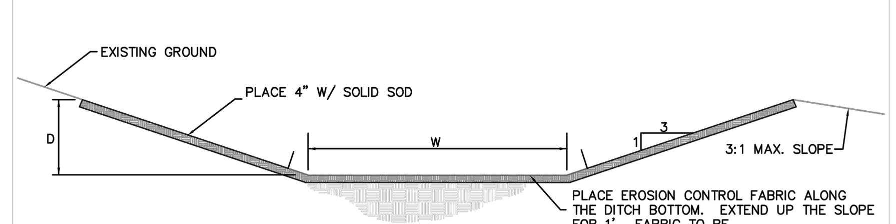

GRASS LINED DITCH DETAIL
NOT TO SCALE

The City of Springdale's Standard Details are minimum requirements for construction in Springdale. Use of these details for any construction project must be reviewed, approved and plans sealed by an Arkansas Registered Professional Engineer.

STANDARD DETAILS FOR STREET & DRAINAGE CONSTRUCTION
SECTION E DITCHES
DATE: OCTOBER 2018
DESIGNED BY: STAFF
DRAWN BY: STAFF
FILE NO. SD-E-2
SPRINGDALE WE'RE MAKING IT HAPPEN

VERT. GRATE HEIGHT	"A"
2 1/2"	2-1/4"
6"	3"

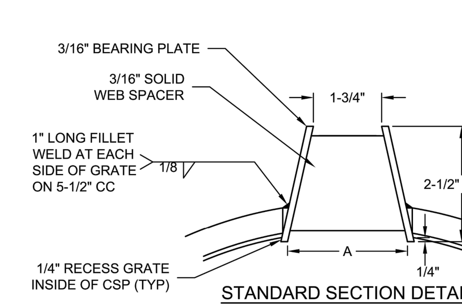

STANDARD SECTION DETAIL

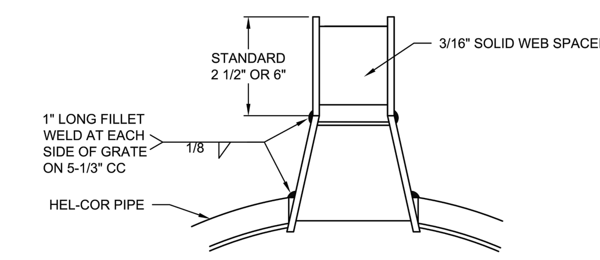

STANDARD SECTION DETAIL WITH VERTICAL EXTENSION

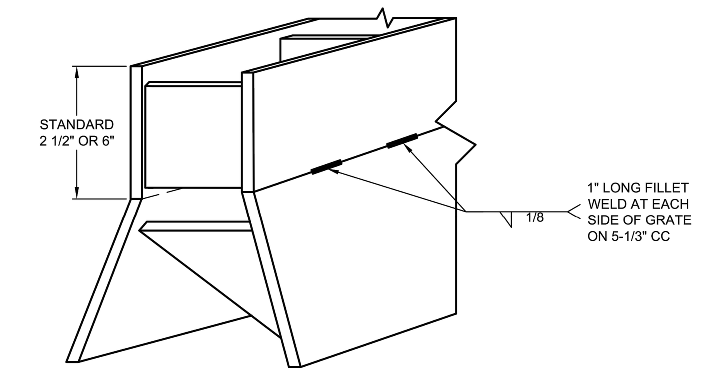

ISOMETRIC VIEW OF GRATES WITH VERTICAL EXTENSION

NOTES:
1. SPACERS DO NOT LINE UP WHEN PLACING THE VERTICAL EXTENSION ONTO THE TRAPEZOIDAL SECTION.
2. DIMENSIONS ARE SUBJECT TO MANUFACTURING TOLERANCES
3. BOTTOM GRATE MAY BE A STRAIGHT GRATE (OPTIONAL)

SLOTTED DRAIN GRATE EXTENSION DETAIL (TRAPEZOIDAL GRATES)
NOT TO SCALE

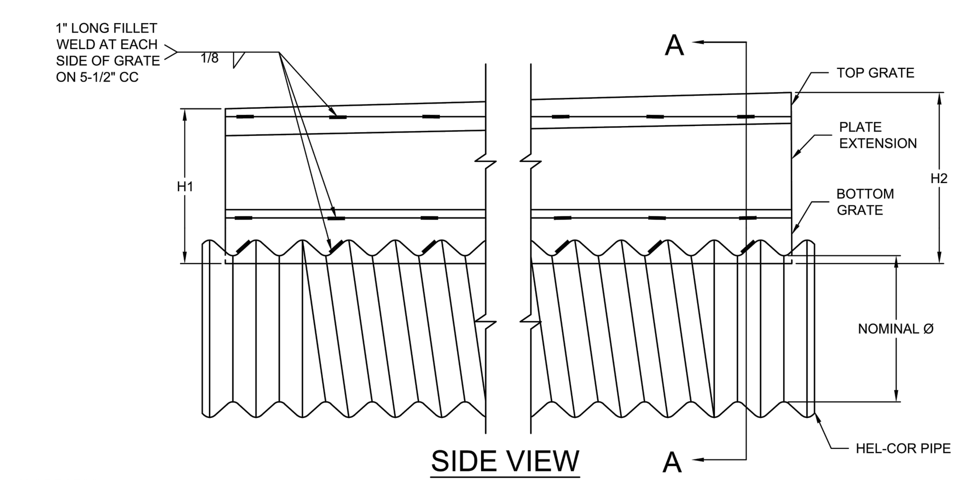

SIDE VIEW

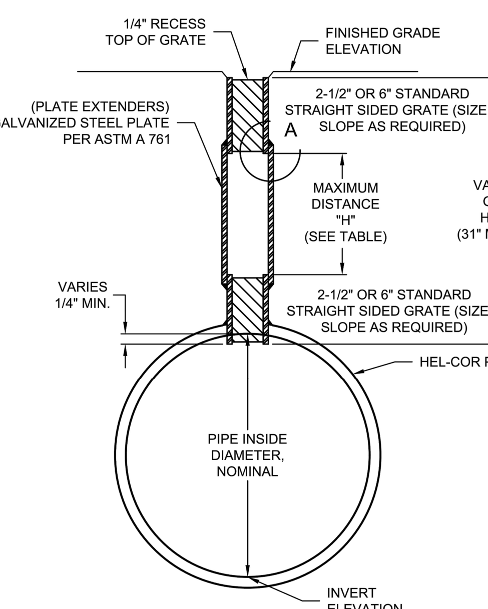

SECTION A-A

LOADING CONDITION	H
≤ H10 * GRANULAR BACKFILL	8"
H20/H25/HL93 * 750 PSI CONCRETE	19"
AIRPORT ** 1000 PSI CONCRETE	12"

* 125 PSI TIRE PRESSURE
** 195 PSI TIRE PRESSURE

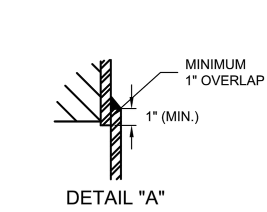

DETAIL "A"

NOTES
1. FINISHED ELEVATION IS SET FROM TOP OF GRATE, NOT FROM INVERT OF PIPE.
2. TOP OF GRATE TO BE RECESSED 1/4" FROM FINISHED GRADE.
3. H1 & H2 MEASURED FROM TOP OF GRATE TO BOTTOM OF GRATE.
4. GRATES ARE SLOPED AS REQUIRED PER THE PROJECT DRAWINGS.
5. REFERENCE SLOTTED DRAIN INSTALLATION DETAILS FOR BACKFILL REQUIREMENTS.
6. ORDER MUST NOTE IF PRODUCT IS USED UNDER AIRCRAFT & HEAVY LOADING FOR SPECIAL WELDING & REINFORCEMENT.
7. DIMENSIONS ARE SUBJECT TO MANUFACTURING TOLERANCES.

SLOTTED DRAIN CORRUGATED STEEL PIPE VARIABLE HEIGHT GRATE DETAIL
NOT TO SCALE

0-SLOTTED DRAIN DETAIL GRID

The design and information shown on this drawing is provided as a service to the project owner, engineer and contractor by Contech Engineered Solutions LLC ("Contech"). Neither this drawing, nor any part thereof, may be used, reproduced or modified in any manner without the prior written consent of Contech. Failure to comply is done at the user's own risk and Contech expressly disclaims any liability or responsibility for such use.
If discrepancies between the supplied information upon which the drawing is based and actual field conditions are encountered as site work progresses, these discrepancies must be reported to Contech immediately for re-evaluation of the design. Contech accepts no liability for designs based on missing, incomplete or inaccurate information supplied by others.

MARK	DATE	REVISION DESCRIPTION	BY

CONTECH ENGINEERED SOLUTIONS LLC
www.ContechES.com
9025 Centre Pointe Dr., Suite 400, West Chester, OH 45069
800-338-1122 513-645-7000 513-645-7993 FAX
CONTECH PIPE SOLUTIONS
CONTECH CONTRACT DRAWING

SLOTTED DRAIN
STANDARD DETAILS
VARIABLE HEIGHT GRATES

PROJECT No.: SEQ. No.: DATE: 11/10/2021
DESIGNED: DRAWN:
CHECKED: APPROVED: ----
SHEET NO.: 6 OF 6

olsson
302 East Millsap Road
Fayetteville, AR 72703
TEL 479.443.3404 www.olsson.com

THIS DOCUMENT WAS ORIGINALLY ISSUED AND SEALED ON JANUARY 17, 2023 BY RICHARD D. HERRICK, A LICENSED PROFESSIONAL ENGINEER IN THE STATE OF ARKANSAS, E-19471

REVISIONS

REV. NO.	DATE	REVISIONS DESCRIPTION	BY

STANDARD DETAILS
STORM SEWER

WEST MILLER ROAD IMPROVEMENTS

CITY OF SPRINGDALE, ARKANSAS

2023

drawn by: SP
checked by: EH
approved by: RH
QA/QC by: RH
project no.: 020-1643A
drawing no.: T_DTL01_0201643A
date: 01/17/2023

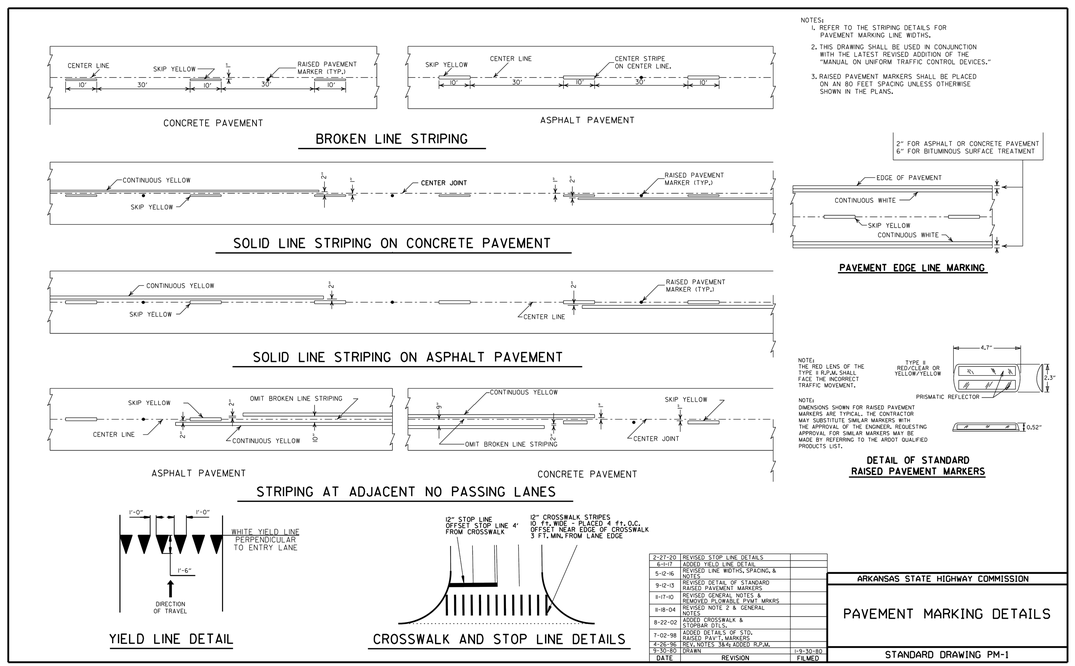

NOTES:
1. REFER TO THE STRIPING DETAILS FOR PAVEMENT MARKING LINE WIDTHS.
2. THIS DRAWING SHALL BE USED IN CONJUNCTION WITH THE LATEST REVISED ADDITION OF THE "MANUAL ON UNIFORM TRAFFIC CONTROL DEVICES."
3. RAISED PAVEMENT MARKERS SHALL BE PLACED ON AN 80 FEET SPACING UNLESS OTHERWISE SHOWN IN THE PLANS.

PAVEMENT EDGE LINE MARKING

NOTE:
THE RED LENS OF THE TYPE II R.P.M. SHALL FACE THE INCORRECT TRAFFIC MOVEMENT.

NOTE:
DIMENSIONS SHOWN FOR RAISED PAVEMENT MARKERS ARE TYPICAL. THE CONTRACTOR MAY SUBSTITUTE SIMILAR MARKERS WITH THE APPROVAL OF THE ENGINEER. REQUESTING APPROVAL FOR SIMILAR MARKERS MAY BE MADE BY REFERRING TO THE ARDOT QUALIFIED PRODUCTS LIST.

DETAIL OF STANDARD RAISED PAVEMENT MARKERS

DATE	REVISION	FILMED
2-27-20	REVISED STOP LINE DETAILS	
6-11-17	ADDED YIELD LINE DETAIL	
5-12-16	REVISED LINE WIDTHS, SPACING, & NOTES	
9-12-13	REVISED DETAIL OF STANDARD RAISED PAVEMENT MARKERS	
6-17-10	REVISED GENERAL NOTES & REMOVED FLOWABLE PVMT. MRKRS	
6-18-04	REVISED NOTE 2 & GENERAL NOTES	
8-22-02	ADDED CROSSWALK & STOPBAR DTLS.	
7-02-98	ADDED DETAILS OF STD. RAISED PVMT. MARKERS	
6-26-96	REV. NOTES 3&4, ADDED R.P.M.	
6-30-80	DRAWN	6-30-80

ARKANSAS STATE HIGHWAY COMMISSION

PAVEMENT MARKING DETAILS

STANDARD DRAWING PM-1

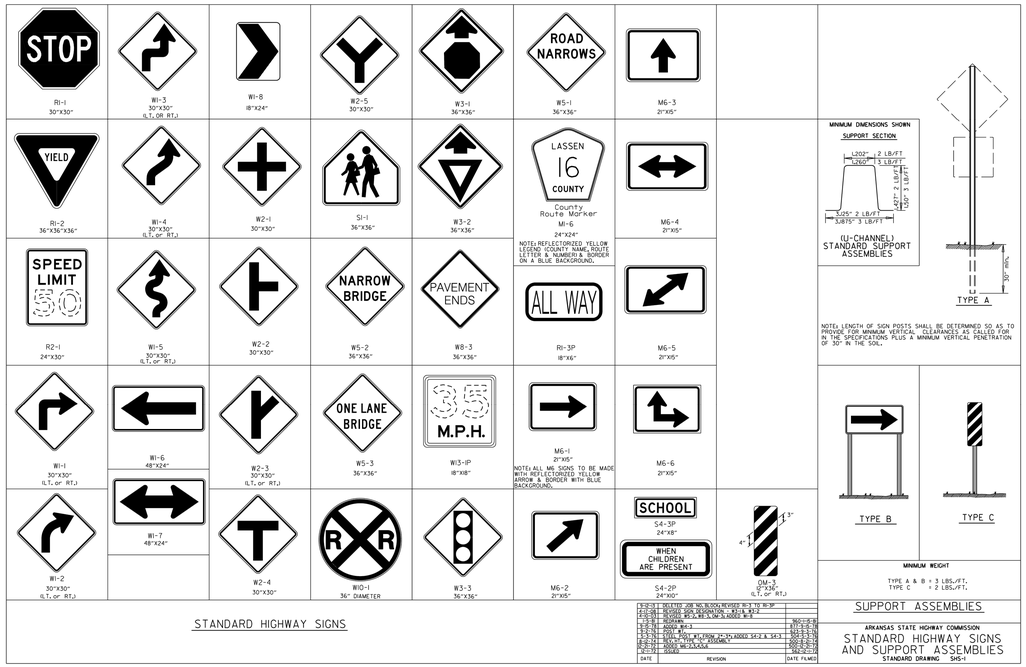

NOTE: REFLECTORIZED YELLOW LEGEND (COUNTY NAME, ROUTE LETTER & NUMBER) & BORDER ON A BLUE BACKGROUND.

NOTE: ALL W6 SIGNS TO BE MADE WITH REFLECTORIZED YELLOW ARROW & BORDER WITH BLUE BACKGROUND.

STANDARD HIGHWAY SIGNS

DATE	REVISION	DATE FILMED
8-12-11	DELETED 20K W6-3(30X36) REVISED W1-3 TO W1-3P	
4-11-08	REVISED SIGN DESIGNATION, W3-2 & W3-3	
6-15-11	REVISED W13-1P, W8-3, M6-3, ADDED W13	M6-1,6-6,8
8-8-16	ADDED W14-3	R1-1,6-16
5-5-14	ADDED R4-7	R4-7,5-5-14
5-5-14	EDIT. POST #'S FROM #2 TO ADDED S4-2 & S4-3	S4-2,5-5-14
8-8-17	ADDED M1-6, M6-4, M6-5	M1-6,M6-4,5,8-8-17
8-8-17	ADDED M6-6, OM-7	M6-6,OM-7,8-8-17
4-1-19	ADDED	S4-3P,4-1-19

SUPPORT ASSEMBLIES

ARKANSAS STATE HIGHWAY COMMISSION

STANDARD HIGHWAY SIGNS AND SUPPORT ASSEMBLIES

STANDARD DRAWING SHS-1

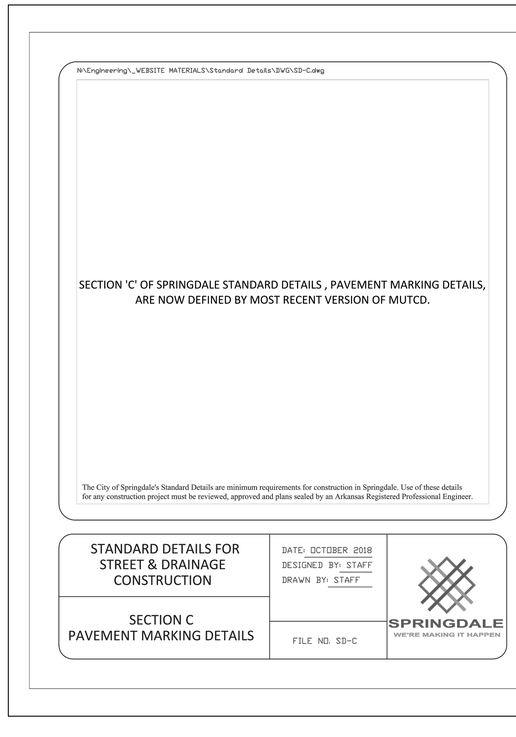

olsson
302 East Millsap Road
Fayetteville, AR 72703
TEL 479.443.3404
www.olsson.com

THIS DOCUMENT WAS ORIGINALLY ISSUED AND SEALED ON JANUARY 17, 2023 BY RICHARD D. HERRICK, A LICENSED PROFESSIONAL ENGINEER IN THE STATE OF ARKANSAS, E-19471

REV. NO.	DATE	REVISIONS DESCRIPTION	BY

REVISIONS

STANDARD DETAILS
PAVEMENT STRIING

WEST MILLER ROAD IMPROVEMENTS

CITY OF SPRINGDALE, ARKANSAS

2023

drawn by: SP
checked by: EH
approved by: RH
QA/QC by: RH
project no.: 020-1643A
drawing no.: T_DTL01_0201643A
date: 01/17/2023

SHEET
22 of 34

DWG: F:\2020\1501-2000\020-1643-a\40-design\AutoCAD\final plans\Sheets\DETAILS\T_DTL01_0201643A.dwg USER: ehall
DATE: Jan 17, 2023 9:29am XREFS: T_TBLK_0201643A
05 - CURB INLET PROTECTION 10 - TREE PROTECTION 016 - SILT FENCE 017 - TEMPORARY TRAFFIC CONTROL
013 - CHECK DAM DETAIL 01 - CONC WASHOUT 02 - CONST ENTRANCE

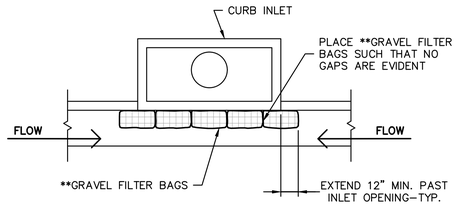

PLAN VIEW ON GRADE OR @ SUMP

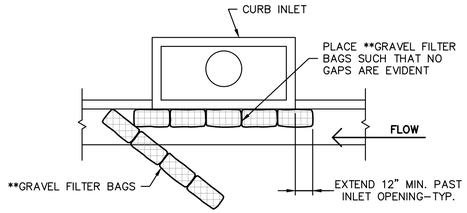

PLAN VIEW @ END OF DRIVE

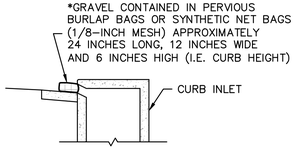

SECTION VIEW

NOTE:

GRAVEL BAGS (**FILTER SOCKS) SHALL BE INSPECTED AND REPLACED AS NEEDED

* 5/8 – 1 1/2" CRUSHED LIMESTONE

** COMPOST FILTER SOCKS MAY BE USED IN LIEU OF GRAVEL BAGS

CURB INLET SEDIMENT TRAP DETAILS
NOT TO SCALE

NOTES:

1. ACTUAL LAYOUT LOCATIONS & NUMBER OF WASH–OUTS TO BE DETERMINED BY CONTRACTOR IN FIELD.
2. THE CONCRETE WASH–OUT SIGN SHALL BE INSTALLED WITHIN 30 FT. OF THE TEMPORARY CONCRETE WASHOUT FACILITY.
3. WASH–OUTS SHALL BE LOCATED A MINIMUM OF 50 FT. FROM STORM DRAINS, OPEN DRAINAGE FACILITIES AND WATER COURSES. AVOID MIXING EXCESS AMOUNTS OF FRESH CONCRETE.
4. INSTALL BEFORE THE START OF ANY CONCRETE ACTIVITIES OR DELIVERIES.
5. INSPECT EVERY WEEK AND AFTER ½" STORM EVENT. REMOVE AND DISPOSE OF HARDENED CONCRETE AND RETURN THE FACILITY TO A FUNCTIONAL CONDITION. WASH–OUT FACILITIES MUST BE CLEANED, OR NEW FACILITIES MUST BE CONSTRUCTED AND READY FOR USE ONCE THE WASH–OUT IS 75% FULL.
6. WHEN TEMPORARY CONCRETE WASH–OUT FACILITIES ARE NO LONGER REQUIRED FOR THE WORK, THE HARDENED CONCRETE SHOULD BE REMOVED AND DISPOSED. MATERIALS USED TO CONSTRUCT TEMPORARY CONCRETE WASH–OUT FACILITIES SHALL BE REMOVED FROM THE SITE AND DISPOSED. HOLES, DEPRESSIONS OR OTHER GROUND DISTURBANCE CAUSED BY THE REMOVAL OF THE WASH–OUT SHALL BE BACKFILLED AND REPAIRED.

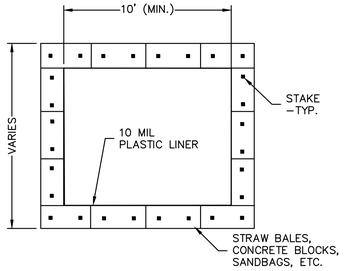

PLAN

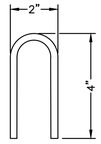

STAPLE

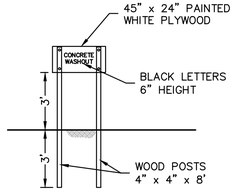

WASHOUT SIGN

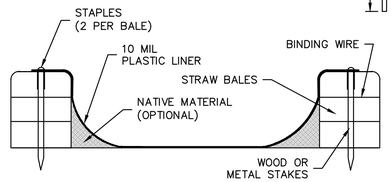

SECTION

CONCRETE WASH-OUT DETAIL
NOT TO SCALE

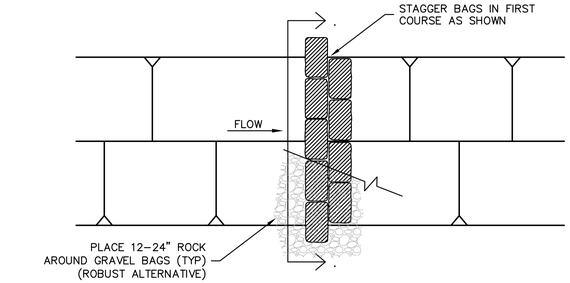

PLAN

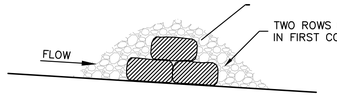

PROFILE

NOTE:
FILL BAGS WITH 1" TO 2" CRUSHED LIMESTONE. BAGS MAY BE BURLAP OR WOVEN PLASTIC. SPACE CHECK DAMS ACCORDINGLY.

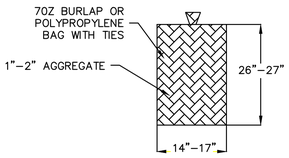

GRAVEL BAG
NOTE: FILL BAGS 2/3 FULL. 60LBS MAX WEIGHT

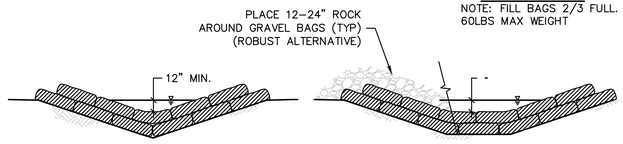

A - TYPICAL CROSS-SECTIONS

CHECK DAM DETAIL
NOT TO SCALE

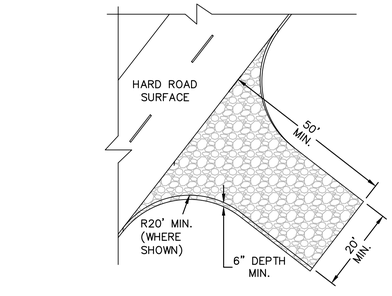

NOTES:

1. INSTALL AS SOON AS POSSIBLE BEFORE START OF GRADING
2. PLACE FILTER FABRIC UNDER STONE
3. USE 3"–6" CLEAN CRUSHED LIMESTONE
4. REPLACE AS NEEDED TO MAINTAIN 6" DEPTH

GRAVEL CONSTRUCTION ENTRANCE / EXIT
NOT TO SCALE

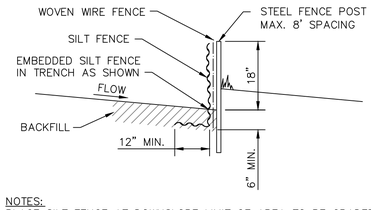

NOTES:

1. PLACE SILT FENCE AT DOWNSLOPE LIMIT OF AREA TO BE GRADED. CONTINUOUS STRAW BALE DIKE MAY BE SUBSTITUTED FOR SILT FENCING.
2. SILT FENCE SHOULD BE SECURELY FASTENED TO EACH STEEL SUPPORT POST OR TO WOVEN WIRE, WHICH IS IN TURN ATTACHED TO THE STEEL FENCE POSTS.
3. INSPECTION SHALL BE FREQUENT AND REPAIR OR REPLACEMENT SHALL BE MADE PROMPTLY AS NEEDED. INSPECT WITHIN 72 HOURS FOLLOWING RAINFALL.
4. SILT FENCE SHALL BE REMOVED WHEN IT HAS SERVED ITS USEFULNESS, SO AS NOT TO BLOCK OR IMPEDE STORM FLOW OR DRAINAGE.
5. SEDIMENT TRAPPED BY THIS PRACTICE SHALL BE DISPOSED OF IN AN APPROVED SITE IN A MANNER THAT WILL NOT CONTRIBUTE TO ADDITIONAL SILTATION.
6. ACCUMULATED SILT SHALL BE REMOVED WHEN IT REACHES A DEPTH OF 6 INCHES AND DISPOSED OF IN AN APPROVED SPOIL SITE OR AS IN NO. 5 ABOVE.
7. AT EACH END OF SILT FENCE, TURN FENCE UPSLOPE AND EXTEND UNTIL GROUND SURFACE RISES 18".

SILT FENCE DETAIL
NOT TO SCALE

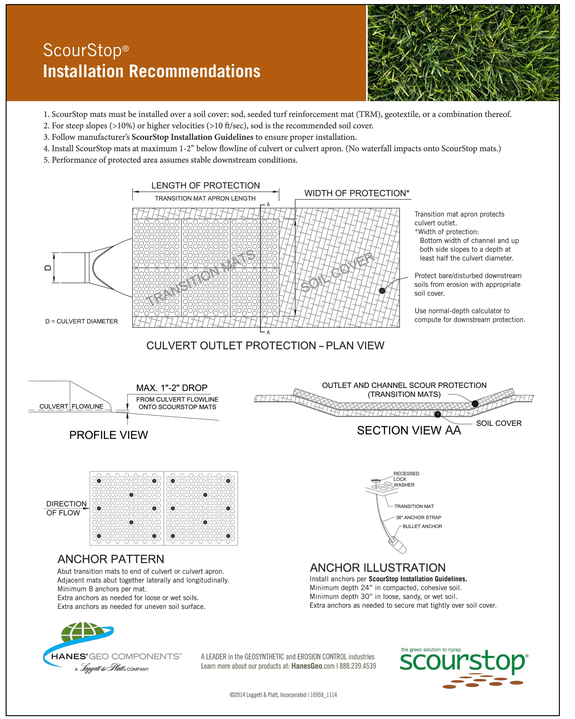

olsson
302 East Millsap Road
Fayetteville, AR 72703
TEL 479.443.3404
www.olsson.com

THIS DOCUMENT WAS ORIGINALLY ISSUED AND SEALED ON JANUARY 17, 2023 BY RICHARD D. HERRICK, A LICENSED PROFESSIONAL ENGINEER IN THE STATE OF ARKANSAS, E-19471

REV. NO.	DATE	REVISIONS DESCRIPTION	BY

REVISIONS

STANDARD DETAILS
STORMWATER POLLUTION PREVENTION PLAN

WEST MILLER ROAD IMPROVEMENTS

2023

CITY OF SPRINGDALE, ARKANSAS

drawn by: SP
checked by: EH
approved by: RH
QA/QC by: RH
project no.: 020-1643A
drawing no.: T_DTL01_0201643A
date: 01/17/2023

DWG: F:\2020\1501-2000\020-1643-01\40-design\AutoCAD\final plans\Sheets\DETAILS\T_DTL01_0201643A.dwg USER: ehall
DATE: Jan 17, 2023 9:29am XREFS: T_TBLK_0201643A
05 – CURB INLET PROTECTION 10 – TREE PROTECTION 016 – SILT FENCE 017 – TEMPORARY TRAFFIC CONTROL
013 – CHECK DAM DETAIL 01 – CONC WASHOUT 02 – CONST ENTRANCE

DWG: F:\2020\1501-2000\020-1643-01\40-design\AutoCAD\final plans\Sheets\DETAILS\T_DTL01_0201643A.dwg USER: ehall
DATE: Jan 17, 2023 9:29am XREFS: T_TBLK_0201643A

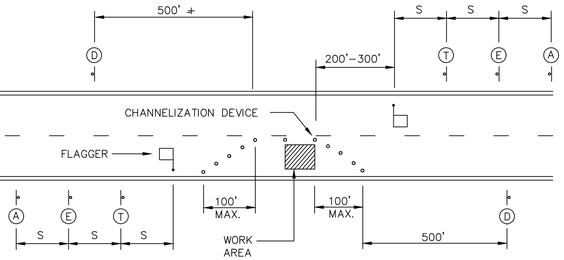

DETAIL 1: TYPICAL CLOSURE - TWO-LANE STREET

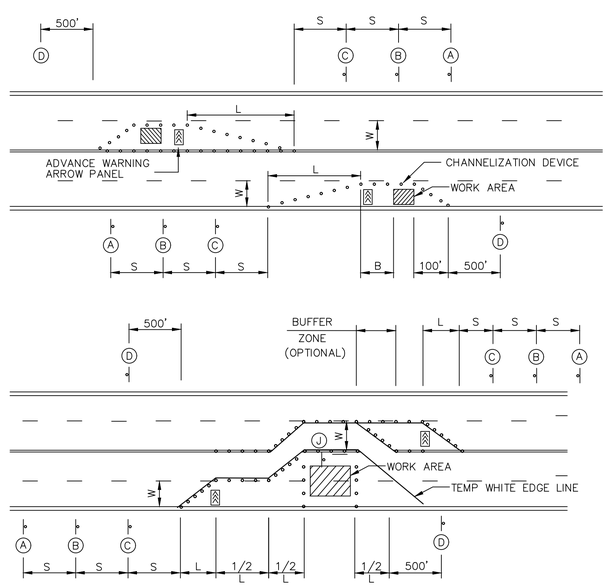

DETAIL 2: TYPICAL CLOSURE - FOUR-LANE STREET

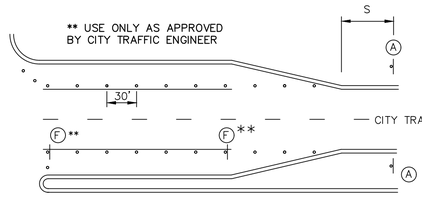

DETAIL 3: TYPICAL RIGHT-TURN LANE AND LEFT-TURN LANE CLOSURES

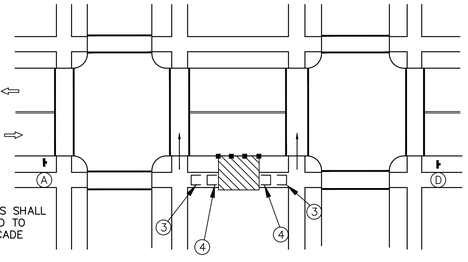

DETAIL 4: TYPICAL SIDEWALK CLOSURE

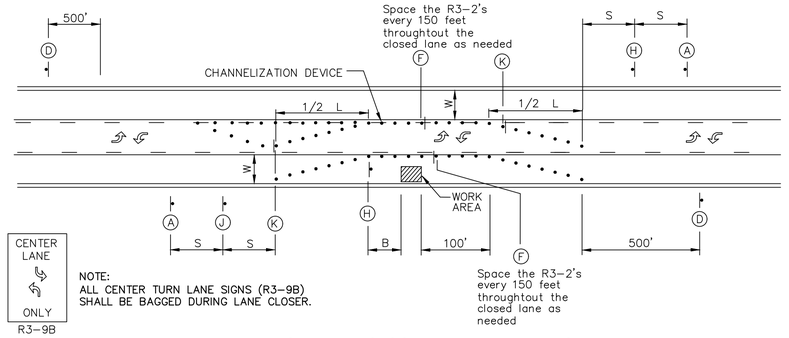

DETAIL 5: TYPICAL LANE CLOSURE - THREE-LANE STREET

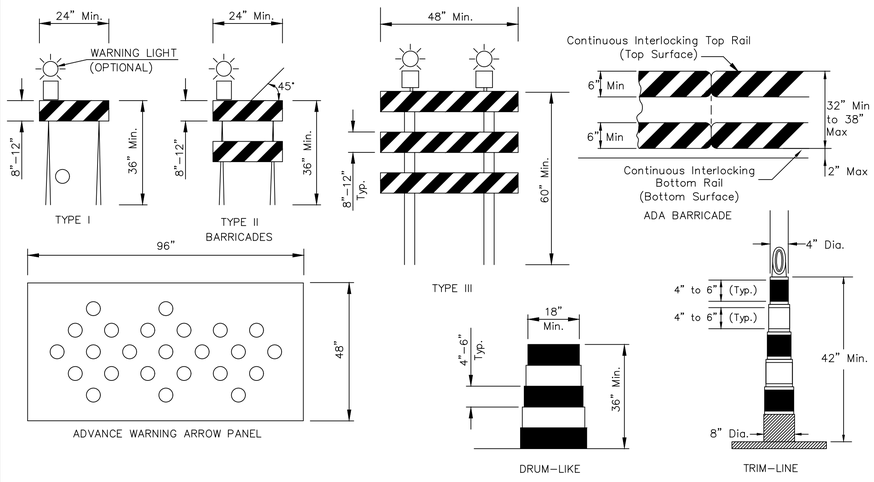

DETAIL 6: NON-METALLIC REFLECTORIZED (HIGH INTENSITY REFLECTIVE SHEETING)

SIGN LEGEND

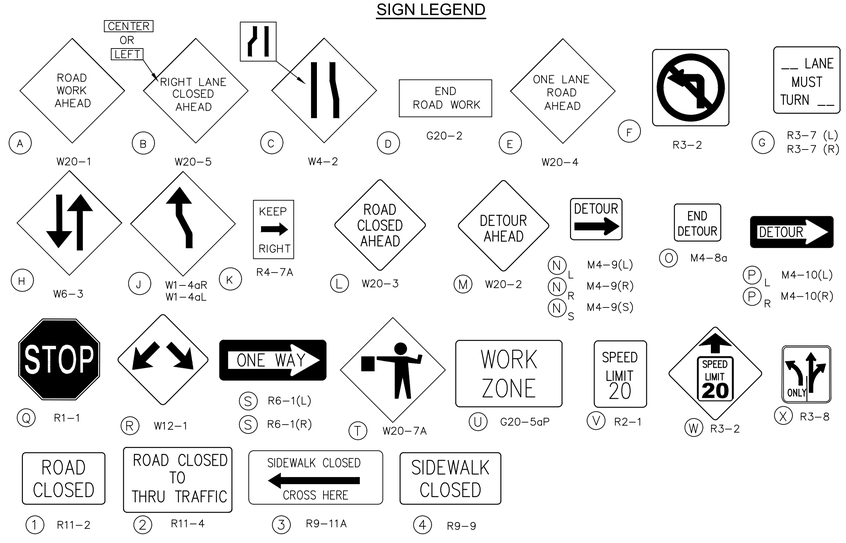

GENERAL NOTES:

1. ALL SIGNS, BARRICADES, DRUMS, MARKINGS AND OTHER TRAFFIC CONTROL DEVICES SHALL CONFORM TO THE MANUAL ON UNIFORM TRAFFIC CONTROL DEVICES (M.U.T.C.D.), MOST CURRENT EDITION.
2. ALL TRAFFIC CONTROL DEVICES SHALL BE STANDARD IN SIZE, SHAPE, COLOR AND MESSAGE, IN GOOD CONDITION, AND REFLECTORIZED. ALL SIGNS AND BARRICADES IN PLACE AT NIGHT SHALL BE REFLECTORIZED WITH HIGH INTENSITY SHEETING. ALL SIGNS SHALL BE SECURELY MOUNTED WITH HEIGHT AND LATERAL LOCATION AS DESCRIBED IN THE M.U.T.C.D.
3. WARNING LIGHTS SHOULD BE USED ON ALL CHANNELIZATION DEVICES AND WARNING SIGNS PER M.U.T.C.D. TYPE A LOW–INTENSITY FLASHING WARNING LIGHTS SHOULD BE MOUNTED ON WARNING SIGNS AS WELL AS BARRICADES WHERE USED SINGLEY TO WARN USERS OF POTENTIALLY HAZARDOUS AREAS DURING NIGHTTIME HOURS. TYPE B HIGH–INTENSITY FLASHING WARNING LIGHTS SHOULD BE USED DURING DAY AND NIGHTTIME OPERATIONS TO INCREASE AWARENESS OF POTENTIALLY HAZARDOUS AREAS. TYPE C STEADY–BURN LIGHTS SHOULD BE MOUNTED ON BARRICADES WHERE USED IN SERIES TO DELINEATE THE EDGE OF THE TRAVEL WAY.
4. ADVANCE WARNING ARROW PANELS SHALL BE USED FOR ALL LANE CLOSURES ON MULTI–LANE STREETS BUT SHOULD NOT BE USED IN LIEU OF PROPER TRAFFIC CONTROL SIGNS, BARRICADES AND CHANNELIZATION DEVICES.
5. FLAGGERS SHALL BE USED WHERE INDICATED ON THE PLANS, WHERE CONSTRUCTION VEHICLES INTERACT WITH NORMAL TRAFFIC OR WHERE CONSTRUCTION ACTIVITIES IMPOSE A RESTRICTION ON TRAFFIC, AS DIRECTED BY THE ENGINEER IN CHARGE OF CONSTRUCTION. WHERE FLAGGERS ARE USED, ADVANCE SIGNING SHALL BE ERECTED AS SHOWN ABOVE OR AS SPECIFIED IN THE M.U.T.C.D. FLAGGERS SHALL MEET THE REQUIREMENTS IN THE M.U.T.C.D. IN REGARD TO CHARACTER, TRAINING, ATTIRE AND BEHAVIOR.
6. CHANNELIZATION DEVICES USED IN THE STREET SHALL BE EITHER DRUMS, CONES OR TRIMLINE CHANNELIZERS.
7. TRAFFIC CONTROL DEVICES NOT IN USE OR NOT APPLICABLE SHALL BE EITHER COVERED OR REMOVED FROM THE WORK AREA.
8. THE CONTRACTOR SHALL PLACE AS MANY BARRICADES AS NEEDED TO EFFECTIVELY SHIELD PEDESTRIANS AND TRAFFIC FROM EXPOSED OBJECTS, EXCAVATIONS AND CONSTRUCTION ACTIVITIES. ADA PEDESTRIAN BARRICADES SHALL BE INSTALLED AROUND ALL EXCAVATIONS LEFT OPEN DURING NON–CONSTRUCTION TIMES OR AS DIRECTED BY THE ENGINEER IN CHARGE OF CONSTRUCTION.
9. ACCESS SHALL BE MAINTAINED TO ALL DRIVEWAYS AND SIDE STREETS UNLESS NOTED OTHERWISE ON THE PLANS.
10. CONSTRUCTION MATERIALS SHALL BE KEPT OFF OF SIDEWALKS, CONSOLIDATED IN ONE LOCATION WITHIN CITY RIGHT–OF–WAY, AND REMOVED DAILY UNLESS OTHERWISE APPROVED BY THE ENGINEER IN CHARGE OF CONSTRUCTION.
11. DIRT, MUD AND OTHER CONSTRUCTION DEBRIS ON STREETS AND SIDEWALKS SHALL BE REMOVED IMMEDIATELY.
12. THE CONTRACTOR SHALL NOT PERFORM ANY WORK THAT WILL RESTRICT TRAFFIC IN ANY WAY BETWEEN THE HOURS OF 7:00 A.M. AND 8:30 A.M. OR 4:30 P.M. AND 6:00 P.M. UNLESS PRIOR APPROVAL HAS BEEN GIVEN.
13. THE CONTRACTOR SHALL BE RESPONSIBLE FOR MAINTAINING ALL TRAFFIC CONTROL DEVICES ON AN AROUND–THE–CLOCK BASIS, WHETHER OR NOT WORK IS ACTIVELY BEING PURSUED AND ANY DEFICIENCIES NOTED SHALL BE CORRECTED IMMEDIATELY.
14. THE TRAFFIC CONTROL REQUIREMENTS SHOWN ON THESE PLANS ARE MINIMUM REQUIREMENTS ONLY AND DO NOT ATTEMPT TO ADDRESS IN DEPTH THE VARIETY OF SITUATIONS THAT MAY OCCUR ONCE CONSTRUCTION HAS STARTED. IN NO WAY DO THE REQUIREMENTS SHOWN ON THESE PLANS RELIEVE THE CONTRACTOR OF HIS RESPONSIBILITY FOR SELECTING THE PROPER TRAFFIC CONTROL DEVICES AND IMPLEMENTATION PROCEDURES THAT WILL ASSURE THE SAFETY OF MOTORIST, PEDESTRIANS, AND WORKERS AT ALL TIMES. ANY ADDITIONAL QUANTITIES OF TRAFFIC CONTROL DEVICES NECESSARY TO COMPLETE THE CONTRACT OR AS ORDERED BY THE ENGINEER SHALL BE CONSIDERED SUBSIDIARY TO THE CONTRACT BID PRICE.
15. CONSTRUCTION VEHICLES PARKED ALONG STREETS AND CONSTRUCTION SIGNS SHALL NOT RESTRICT SIGHT DISTANCE FOR VEHICLES EXITING AT STREETS OR ANY DRIVES.
16. SHOULD THE CONTRACTOR FAIL TO ENFORCE THE TRAFFIC CONTROL PLAN OR FAIL TO CLEAN, REPLACE OR OTHERWISE MAINTAIN THE TRAFFIC CONTROL DEVICES WHEN DIRECTED TO DO SO BY THE ENGINEER OR REPRESENTATIVE, THE CITY/CONTROLLING JURISDICTION MAY TAKE ONE OR MORE OF THE FOLLOWING ACTIONS:
    A) EMPLOY ANOTHER AGENCY TO CORRECT DEFICIENCIES IN SIGNING OR WARNING DEVICES AND DEDUCT THE COST FROM THE CONTRACTOR'S PAY ESTIMATE
    B) SUSPEND ALL PAY ESTIMATES UNTIL DEFICIENCIES ARE CORRECTED.
    C) STOP THE WORK UNTIL DEFICIENCIES ARE CORRECTED.
    D) PLACE THE CONTRACTOR IN DEFAULT.
17. THE CONTRACTOR SHALL KEEP ROADWAY CLOSURES DUE TO CONSTRUCTION ACTIVITIES TO A MINIMUM AND PROVIDE ADVANCED NOTICE TO AFFECTED USERS.
18. THE CONTRACTOR SHALL NOTIFY ENFORCEMENT AND EMERGENCY AGENCIES BEFORE THE START OF CONSTRUCTION TO REQUEST THEIR COOPERATION AND TO PROVIDE COORDINATION OF SERVICES WHEN EMERGENCIES ARISE DURING THE CONSTRUCTION AT THE PROJECT SITE. WHEN THE CONTRACTOR COMPLETES THIS NOTIFICATION WITH ENFORCEMENT AND EMERGENCY AGENCIES, A REPORT SHALL BE FURNISHED TO THE ENGINEER ON THE STATUS OF INCIDENT MANAGEMENT.
19. THE CONTRACTOR MAY, IF NEED ARISES OR AT THE REQUEST OF THE ENGINEER, PLACE REDUCED SPEED LIMIT SIGNING AND WORK ZONE SPEED LIMIT SIGNING IN ADVANCE OF ALL ACTIVE WORK ZONE AREAS. WORK ZONE SPEED LIMIT REDUCTION SHALL NOT BE GREATER THAN 10 MPH THROUGHOUT CONSTRUCTION AREAS WITHOUT ADVANCED SIGNING IN PLACE. CONTRACTOR SHALL COVER OR REPLACE ALL SPEED LIMIT SIGNS IN CONFLICT WITH THE WORK ZONE SPEED LIMIT THROUGHOUT THE CONSTRUCTION AREA.

TAPER DETAIL				
Speed Limit M.P.H.	Minimum Taper Length (L) — Lane Width (W) 10	11	12	Minimum Number of Channelizing Devices for Taper
20	70	75	80	5
25	105	115	125	6
30	150	165	180	7
35	205	225	245	8
40	270	295	320	9
45	450	495	540	13
50	500	550	600	13
55	550	605	660	13

MAXIMUM CHANNELIZATION SPACING IN FEET *		
Speed Limit M.P.H.	Along Taper	After Taper
20	20	40
25	25	50
30	30	60
35	35	70
40	40	80
45	45	90
50	50	100
55	55	100

* THE MAXIMUM DISTANCE IN FEET BETWEEN DEVICES IN A TAPER SHOULD NOT EXCEED 1.0 TIMES THE SPEED LIMIT IN MPH.

Guidelines for length of longitudinal buffer space (B)	
Speed* (mph)	Length (Feet)
20	35
25	55
30	85
35	120
40	170
45	220
50	300

* POSTED SPEED.

SIGN SPACING(S)	
Speed Limit M.P.H.	Spacing (Feet)
< 30	100
35 – 45	350
> 55	500

olsson
302 East Millsap Road
Fayetteville, AR 72703
TEL 479.443.3404
www.olsson.com

THIS DOCUMENT WAS ORIGINALLY ISSUED AND SEALED ON JANUARY 17, 2023 BY RICHARD D. HERRICK, A LICENSED PROFESSIONAL ENGINEER IN THE STATE OF ARKANSAS, E-19471

REV. NO.	DATE	REVISIONS DESCRIPTION	BY

REVISIONS

STANDARD DETAILS
TEMPORARY TRAFFIC CONTROL

WEST MILLER ROAD IMPROVEMENTS

CITY OF SPRINGDALE, ARKANSAS

2023

drawn by: SP
checked by: EH
approved by: RH
QA/QC by: RH
project no.: 020-1643A
drawing no.: T_DTL01_0201643A
date: 01/17/2023

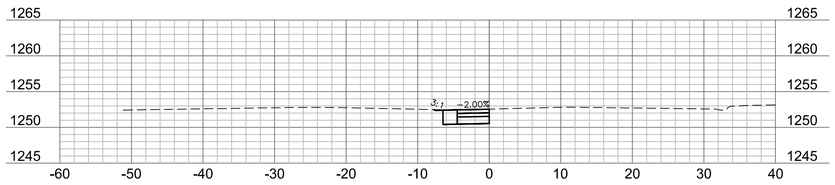

10+50

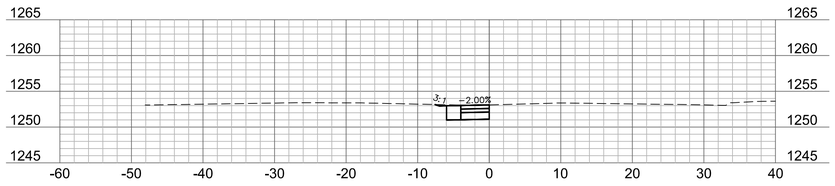

10+40.08

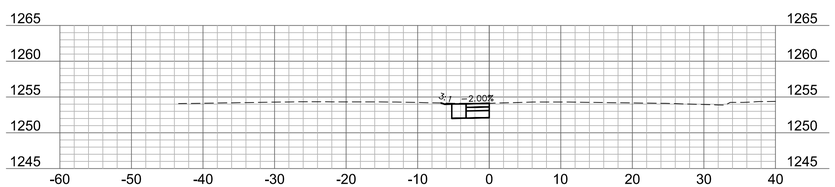

10+25

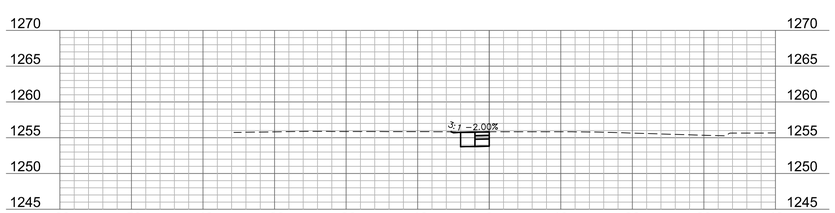

10+00

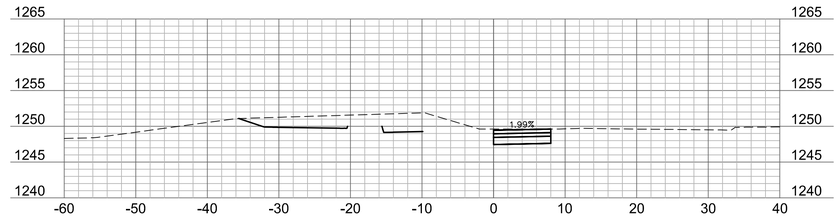

11+20

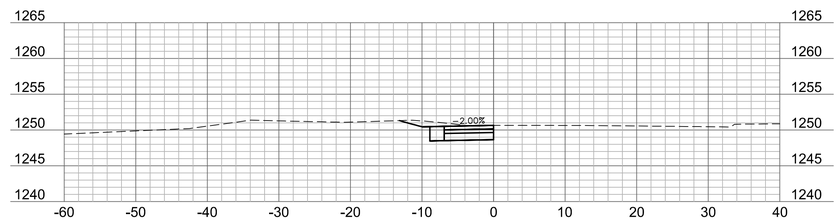

11+00

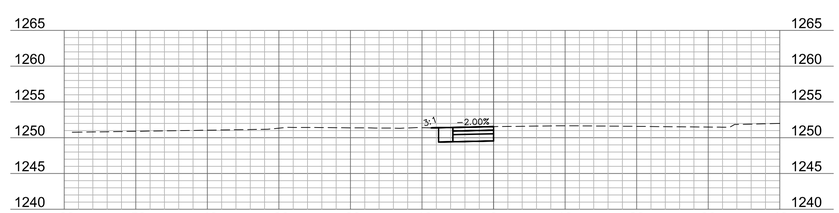

10+75

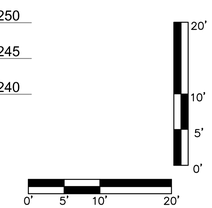

olsson
302 East Millsap Road
Fayetteville, AR 72703
TEL 479.443.3404
www.olsson.com

THIS DOCUMENT WAS ORIGINALLY ISSUED AND SEALED ON JANUARY 17, 2023 BY RICHARD D. HERRICK, A LICENSED PROFESSIONAL ENGINEER IN THE STATE OF ARKANSAS, E-19471

REVISIONS

REV. NO.	DATE	REVISIONS DESCRIPTION	BY

CROSS SECTIONS

WEST MILLER ROAD IMPROVEMENTS

CITY OF SPRINGDALE, ARKANSAS

2023

drawn by:	SP
checked by:	EH
approved by:	RH
QA/QC by:	RH
project no.:	020-1643A
drawing no.:	T_XSV_0201643A
date:	01/17/2023

SHEET
25 of 34

DWG: F:\2020\1501-2000\020-1643-a\40-design\AutoCAD\final plans\Sheets\CROSS SECTIONS\T_XSV_0201643A.dwg USER: ehall
DATE: Jan 17, 2023 9:30am XREFS: T_TBLK_0201643A T_BASE_0201643A

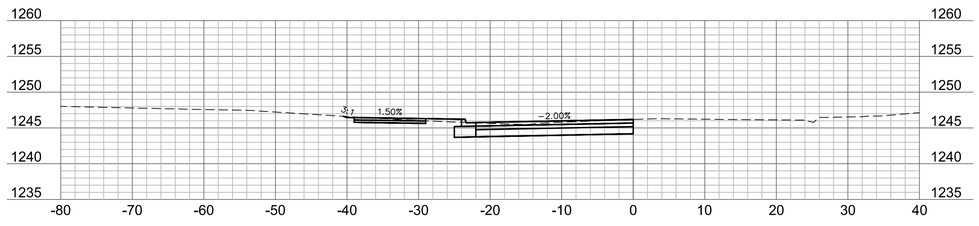

100+75

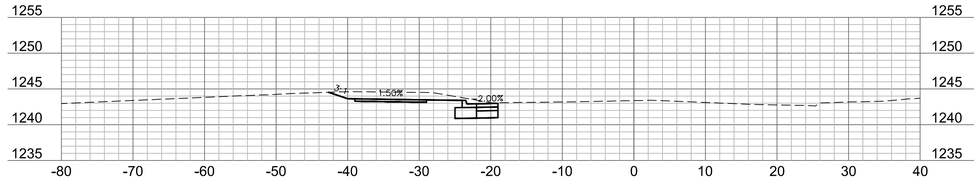

101+75

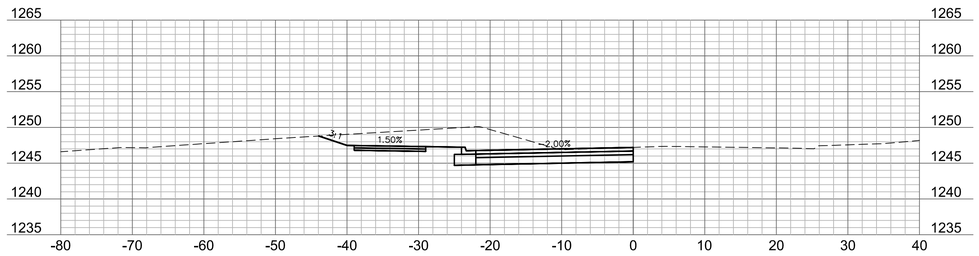

100+50

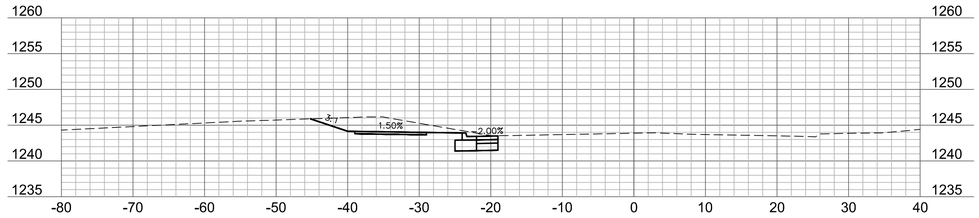

101+50

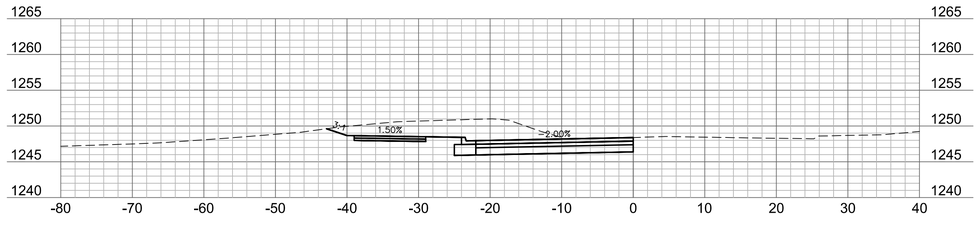

100+25

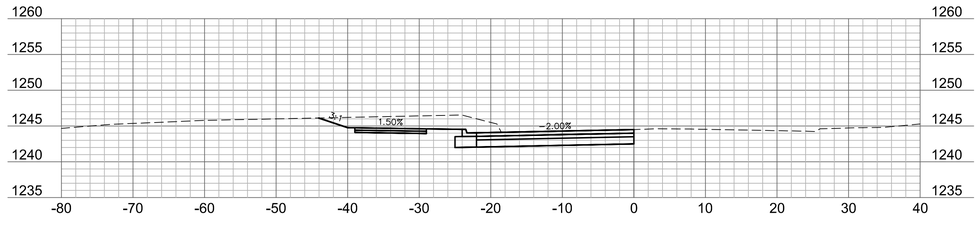

101+25

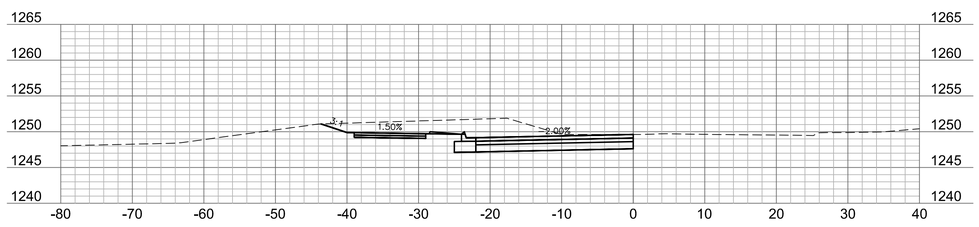

100+00

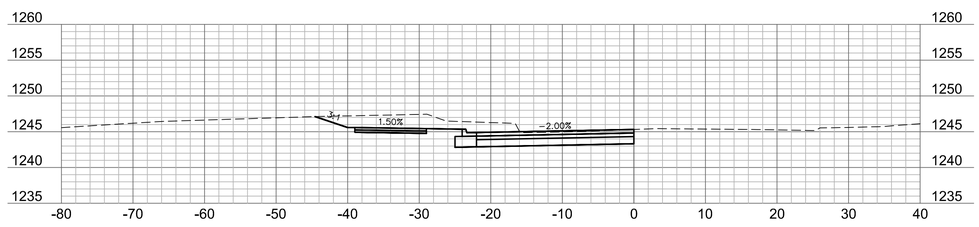

101+00

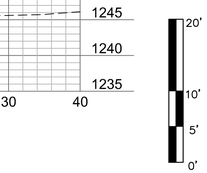

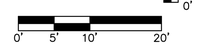

olsson
302 East Millsap Road
Fayetteville, AR 72703
TEL 479.443.3404
www.olsson.com

THIS DOCUMENT WAS ORIGINALLY ISSUED AND SEALED ON JANUARY 17, 2023 BY RICHARD D. HERRICK, A LICENSED PROFESSIONAL ENGINEER IN THE STATE OF ARKANSAS, E-19471

REV. NO.	DATE	REVISIONS DESCRIPTION	BY

REVISIONS

CROSS SECTIONS

WEST MILLER ROAD IMPROVEMENTS

CITY OF SPRINGDALE, ARKANSAS

2023

drawn by:	SP
checked by:	EH
approved by:	RH
QA/QC by:	RH
project no.:	020-1643A
drawing no.:	T_XSV_0201643A
date:	01/17/2023

SHEET
26 of 34

DWG: F:\2020\1501-2000\020-1643-01\40-design\AutoCAD\final plans\Sheets\CROSS SECTIONS\T_XSV_0201643A.dwg USER: ehall
DATE: Jan 17, 2023 9:30am XREFS: T_TBLK_0201643A T_BASE_0201643A

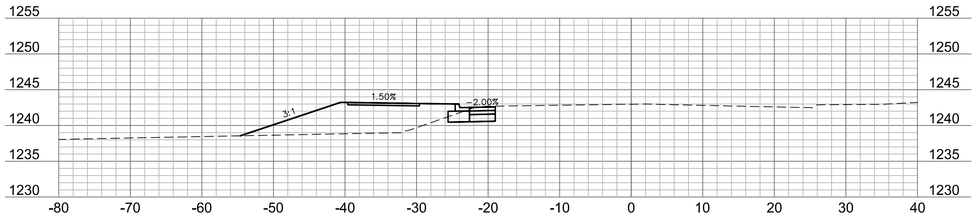

102+70.31

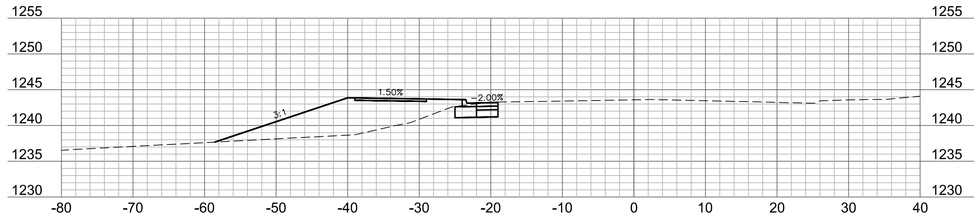

103+75

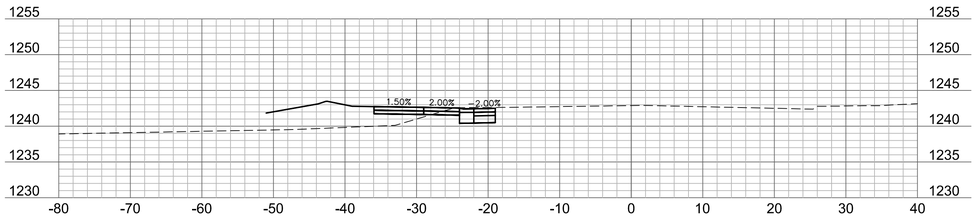

102+50

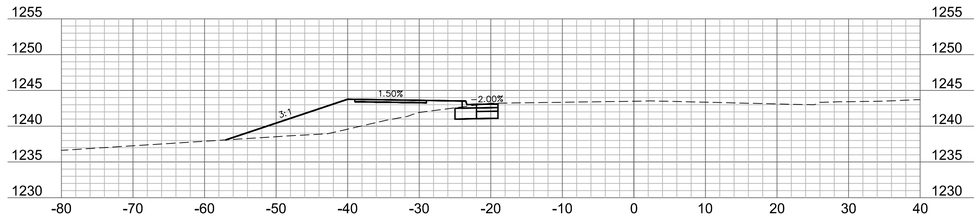

103+50

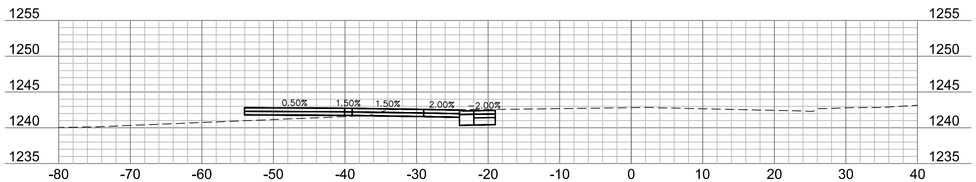

102+25

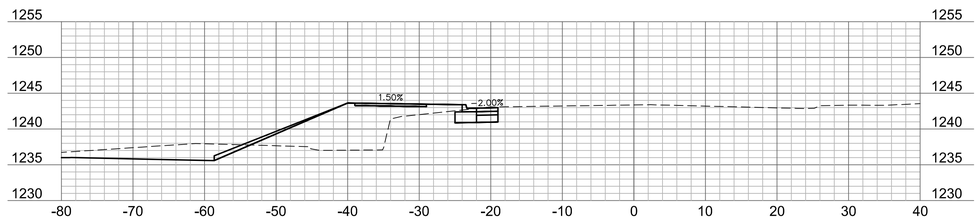

103+25

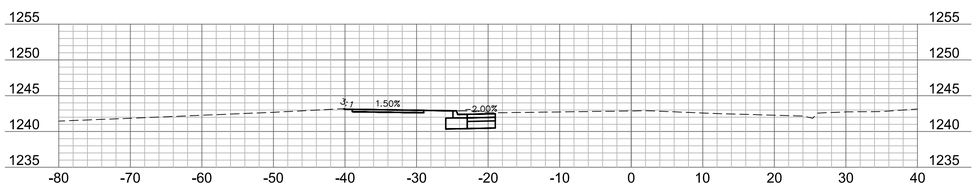

102+00

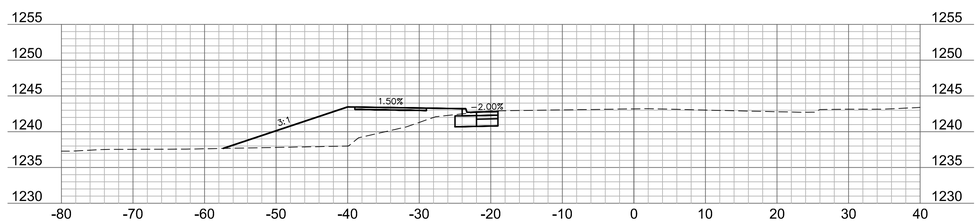

103+00

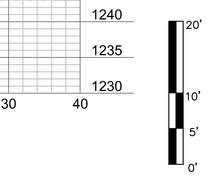

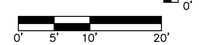

olsson
302 East Millsap Road
Fayetteville, AR 72703
TEL 479.443.3404
www.olsson.com

THIS DOCUMENT WAS ORIGINALLY ISSUED AND SEALED ON JANUARY 17, 2023 BY RICHARD D. HERRICK, A LICENSED PROFESSIONAL ENGINEER IN THE STATE OF ARKANSAS, E-19471

REV. NO.	DATE	REVISIONS DESCRIPTION	BY

REVISIONS

CROSS SECTIONS

WEST MILLER ROAD IMPROVEMENTS

CITY OF SPRINGDALE, ARKANSAS

2023

drawn by: SP
checked by: EH
approved by: RH
QA/QC by: RH
project no.: 020-1643A
drawing no.: T_XSV_0201643A
date: 01/17/2023

SHEET
27 of 34

DWG: F:\2020\1501-2000\020-1643-01\40-design\AutoCAD\final plans\Sheets\CROSS SECTIONS\T_XSV_0201643A.dwg
DATE: Jan 17, 2023 9:30am
XREFS: T_TBLK_0201643A
T_BASE_0201643A
USER: ehall

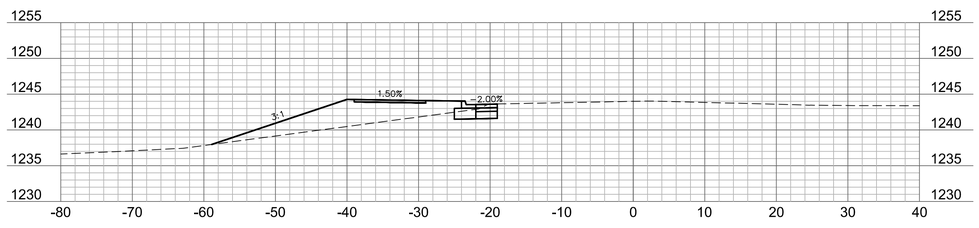

104+75

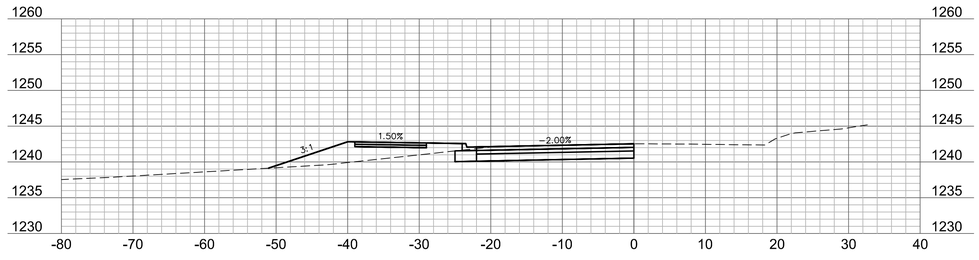

105+75

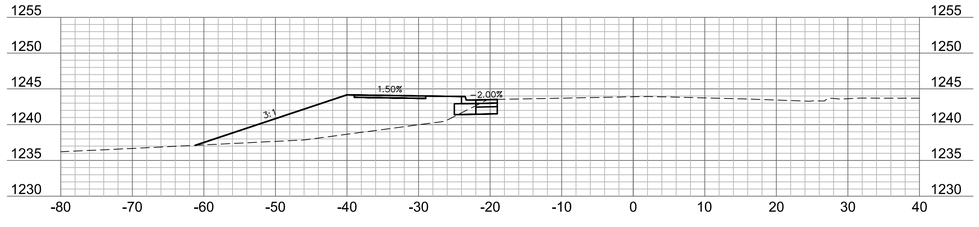

104+50

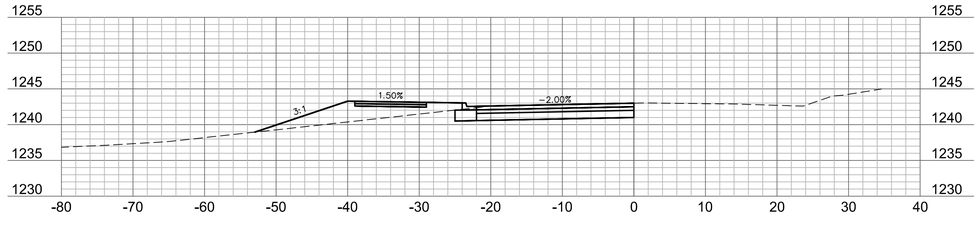

105+50

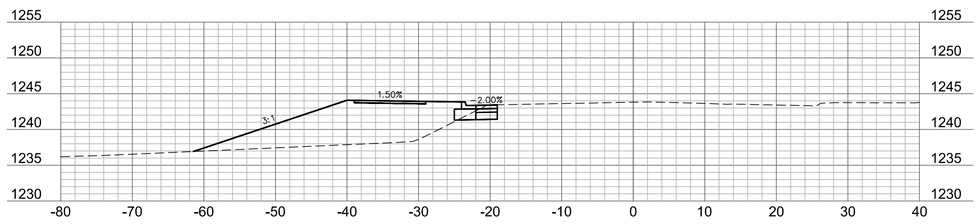

104+25

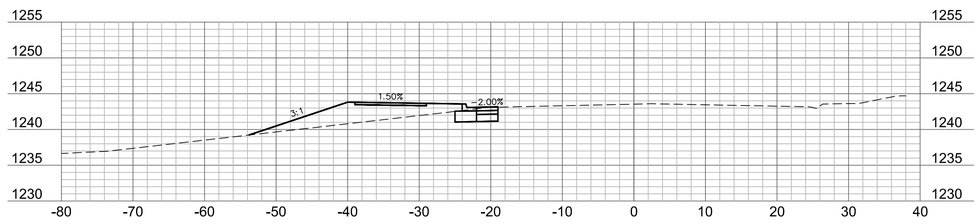

105+25

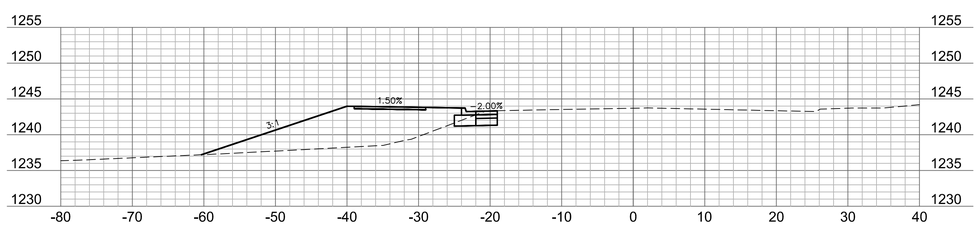

104+00

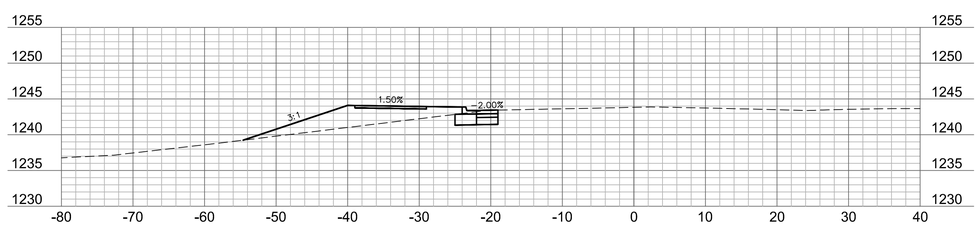

105+00

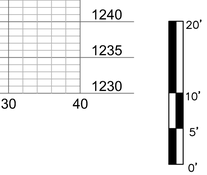

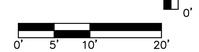

olsson
302 East Millsap Road
Fayetteville, AR 72703
TEL 479.443.3404
www.olsson.com

THIS DOCUMENT WAS ORIGINALLY ISSUED AND SEALED ON JANUARY 17, 2023 BY RICHARD D. HERRICK, A LICENSED PROFESSIONAL ENGINEER IN THE STATE OF ARKANSAS, E-19471

REVISIONS

REV. NO.	DATE	REVISIONS DESCRIPTION	BY

CROSS SECTIONS

WEST MILLER ROAD IMPROVEMENTS

CITY OF SPRINGDALE, ARKANSAS

2023

drawn by:	SP
checked by:	EH
approved by:	RH
QA/QC by:	RH
project no.:	020-1643A
drawing no.:	T_XSV_0201643A
date:	01/17/2023

SHEET
28 of 34

DWG: F:\2020\1501-2000\020-1643-01\40-design\AutoCAD\final plans\Sheets\CROSS SECTIONS\T_XSV_0201643A.dwg USER: ehall
DATE: Jan 17, 2023 9:30am XREFS: T_TBLK_0201643A
T_BASE_0201643A

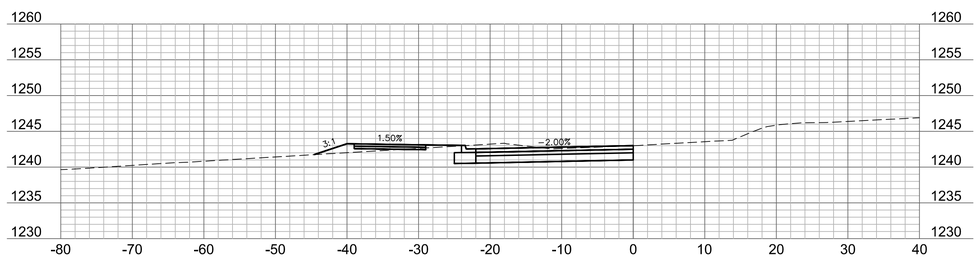

106+50

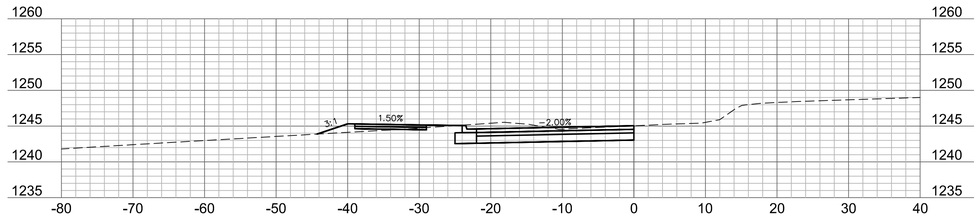

107+25

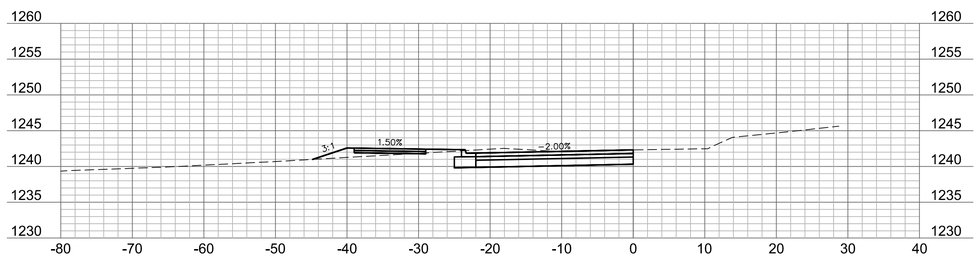

106+25

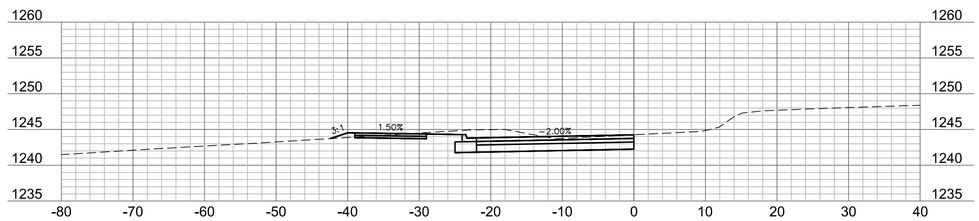

107+00

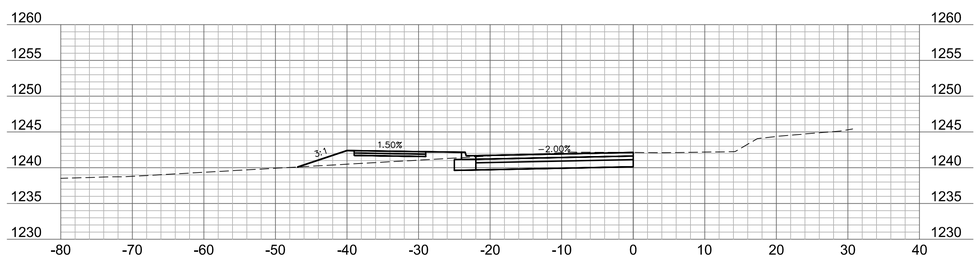

106+00

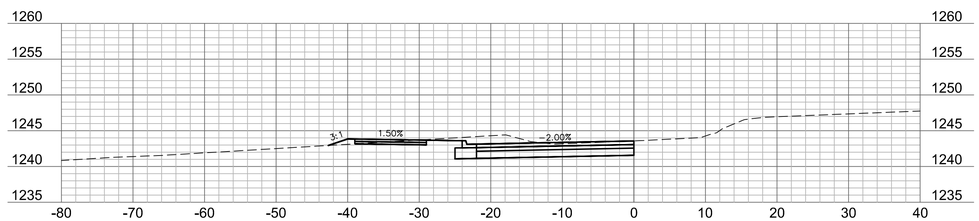

106+75

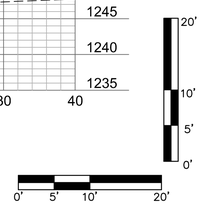

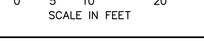

olsson
302 East Millsap Road
Fayetteville, AR 72703
TEL 479.443.3404
www.olsson.com

THIS DOCUMENT WAS ORIGINALLY ISSUED AND SEALED ON JANUARY 17, 2023 BY RICHARD D. HERRICK, A LICENSED PROFESSIONAL ENGINEER IN THE STATE OF ARKANSAS, E-19471

REVISIONS

REV. NO.	DATE	REVISIONS DESCRIPTION	BY

CROSS SECTIONS

WEST MILLER ROAD IMPROVEMENTS

CITY OF SPRINGDALE, ARKANSAS

2023

drawn by:	SP
checked by:	EH
approved by:	RH
QA/QC by:	RH
project no.:	020-1643A
drawing no.:	T_XSV_0201643A
date:	01/17/2023

SHEET
29 of 34

DWG: F:\2020\1501-2000\020-1643-01\40-design\AutoCAD\final plans\Sheets\CROSS SECTIONS\T_XSV_0201643A.dwg USER: ehall
DATE: Jan 17, 2023 9:30am XREFS: T_TBLK_0201643A T_BASE_0201643A

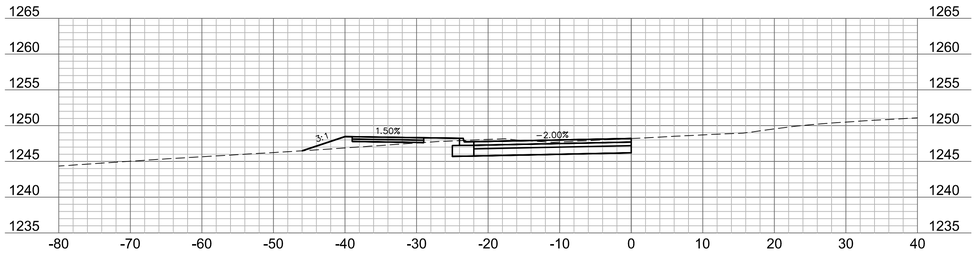

108+25

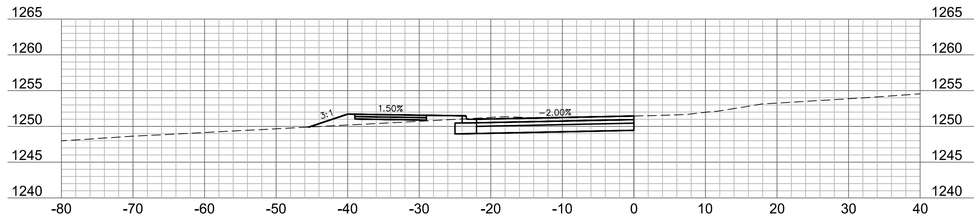

109+25

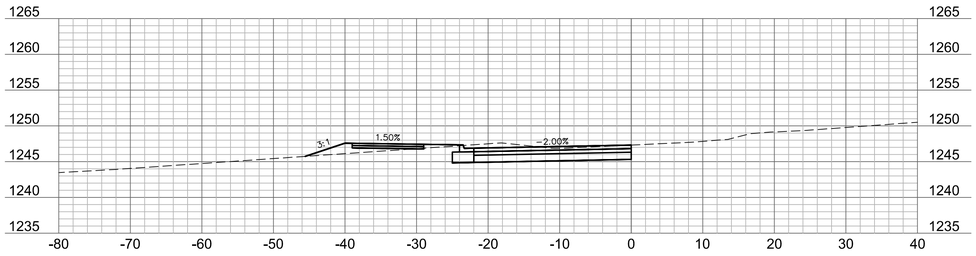

108+00

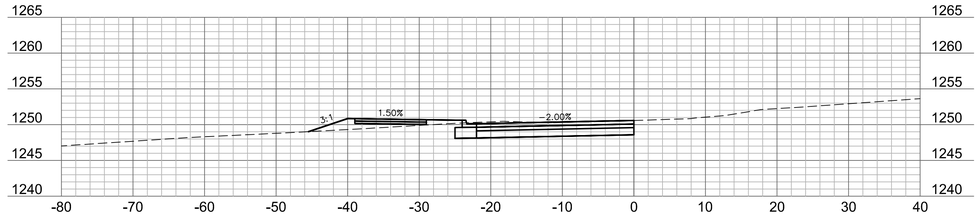

109+00

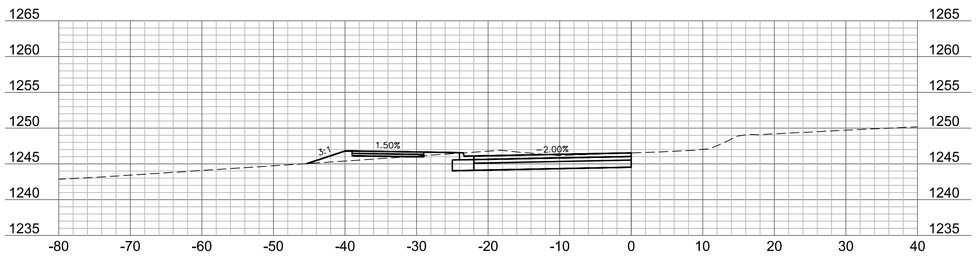

107+75

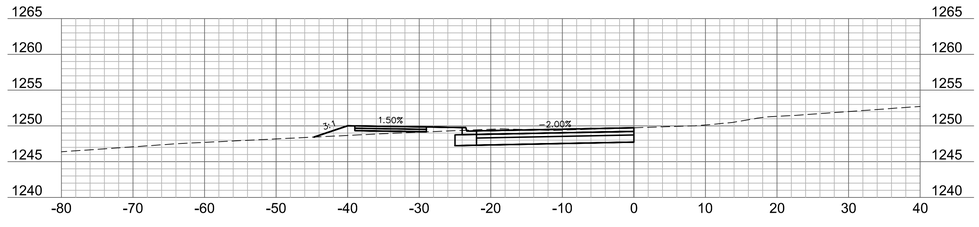

108+75

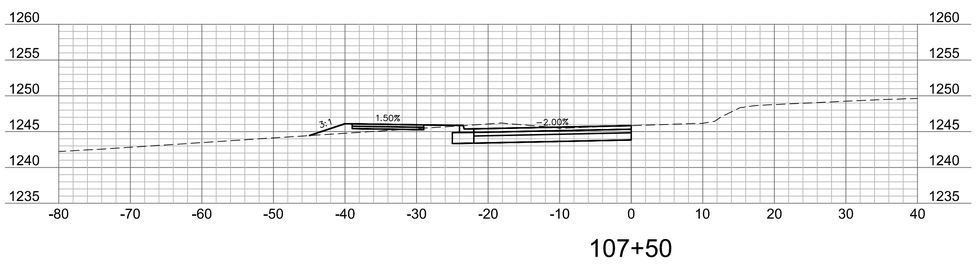

107+50

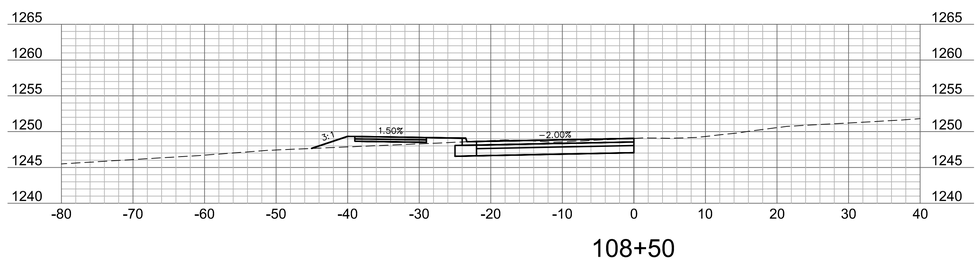

108+50

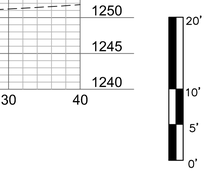

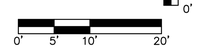

olsson
302 East Millsap Road
Fayetteville, AR 72703
TEL 479.443.3404
www.olsson.com

THIS DOCUMENT WAS ORIGINALLY ISSUED AND SEALED ON JANUARY 17, 2023 BY RICHARD D. HERRICK, A LICENSED PROFESSIONAL ENGINEER IN THE STATE OF ARKANSAS, E-19471

REVISIONS

REV. NO.	DATE	REVISIONS DESCRIPTION	BY

CROSS SECTIONS

WEST MILLER ROAD IMPROVEMENTS

CITY OF SPRINGDALE, ARKANSAS

2023

drawn by:	SP
checked by:	EH
approved by:	RH
QA/QC by:	RH
project no.:	020-1643A
drawing no.:	T_XSV_0201643A
date:	01/17/2023

SHEET
30 of 34

DWG: F:\2020\1501-2000\020-1643-01\40-design\AutoCAD\final plans\Sheets\CROSS SECTIONS\T_XSV_0201643A.dwg USER: ehall
DATE: Jan 17, 2023 9:30am XREFS: T_TBLK_0201643A
T_BASE_0201643A

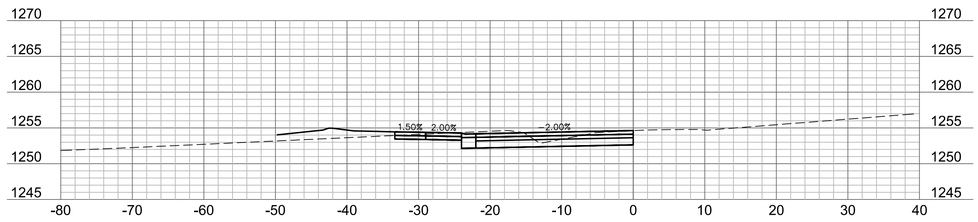

110+25

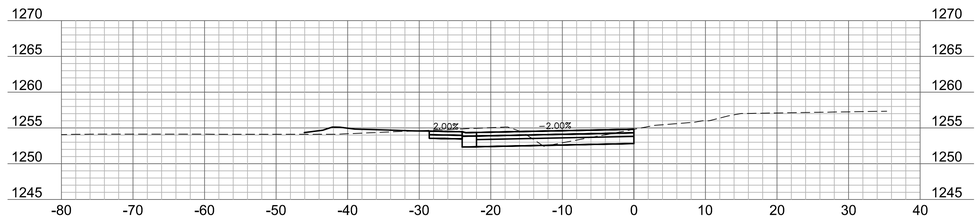

111+25

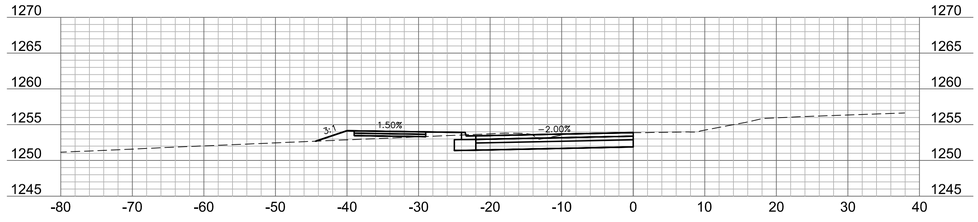

110+00

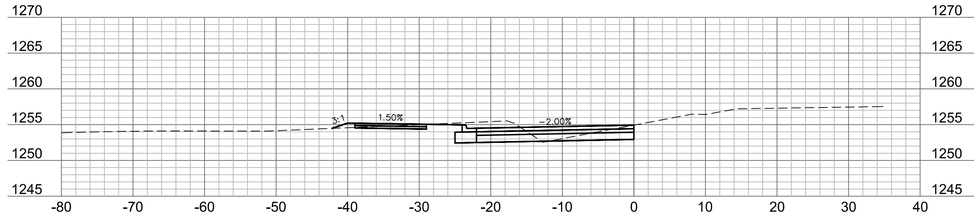

111+00

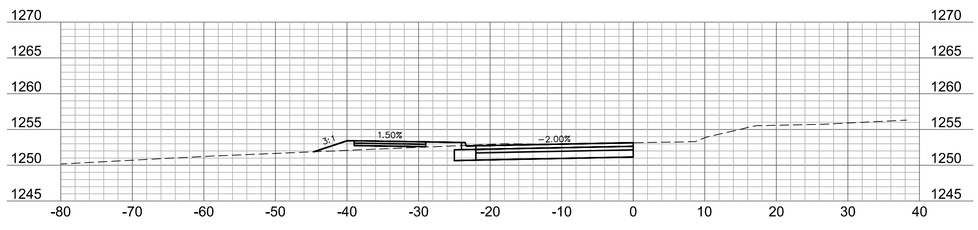

109+75

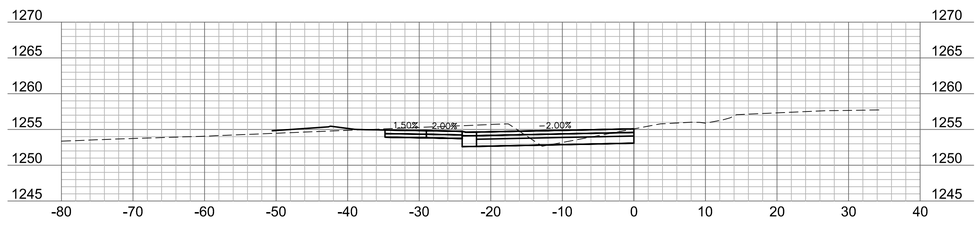

110+75

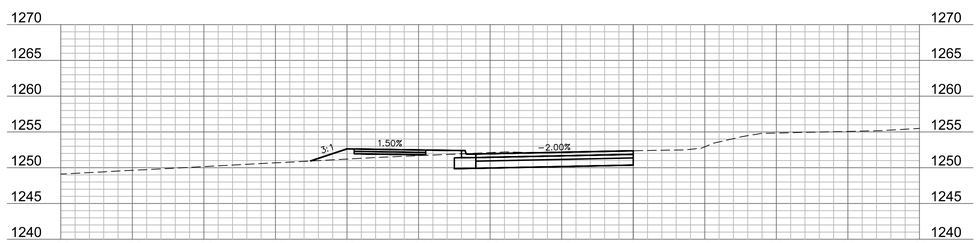

109+50

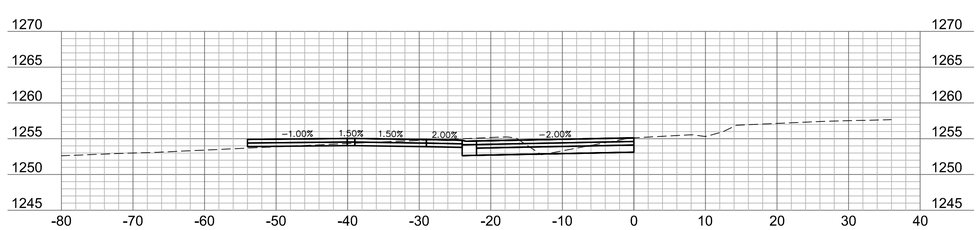

110+50.59

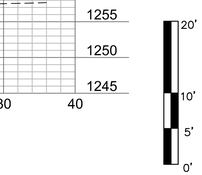

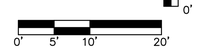

olsson
302 East Millsap Road
Fayetteville, AR 72703
TEL 479.443.3404
www.olsson.com

THIS DOCUMENT WAS ORIGINALLY ISSUED AND SEALED ON JANUARY 17, 2023 BY RICHARD D. HERRICK, A LICENSED PROFESSIONAL ENGINEER IN THE STATE OF ARKANSAS, E-19471

REVISIONS

REV. NO.	DATE	REVISIONS DESCRIPTION	BY

CROSS SECTIONS

WEST MILLER ROAD IMPROVEMENTS

CITY OF SPRINGDALE, ARKANSAS

2023

drawn by:	SP
checked by:	EH
approved by:	RH
QA/QC by:	RH
project no.:	020-1643A
drawing no.:	T_XSV_0201643A
date:	01/17/2023

SHEET
31 of 34

DWG: F:\2020\1501-2000\020-1643-01\40-design\AutoCAD\final plans\Sheets\CROSS SECTIONS\T_XSV_0201643A.dwg USER: ehall
DATE: Jan 17, 2023 9:30am XREFS: T_TBLK_0201643A T_BASE_0201643A

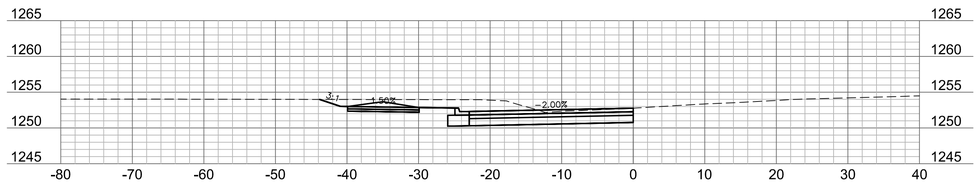

111+97.96

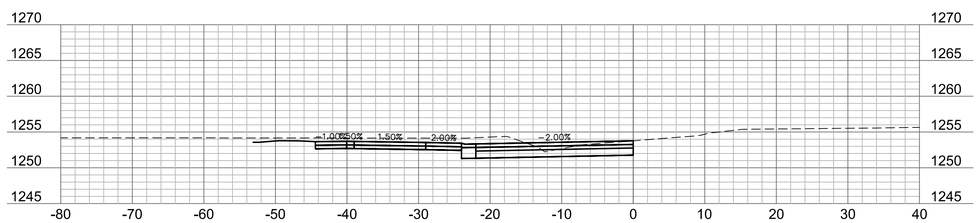

111+75

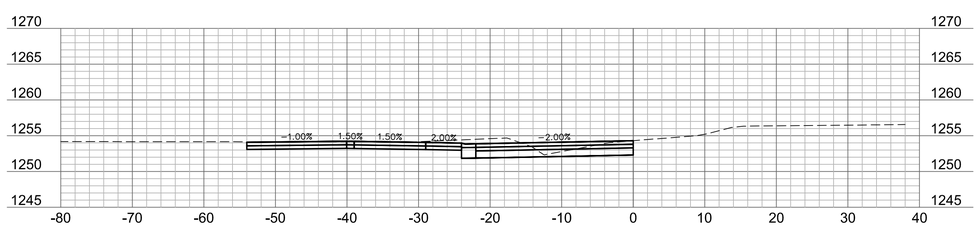

111+55.53

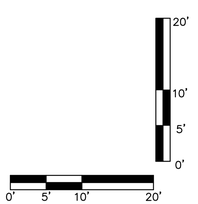

olsson
302 East Millsap Road
Fayetteville, AR 72703
TEL 479.443.3404
www.olsson.com

THIS DOCUMENT WAS ORIGINALLY ISSUED AND SEALED ON JANUARY 17, 2023 BY RICHARD D. HERRICK, A LICENSED PROFESSIONAL ENGINEER IN THE STATE OF ARKANSAS, E-19471

REVISIONS

REV. NO.	DATE	REVISIONS DESCRIPTION	BY

CROSS SECTIONS

WEST MILLER ROAD IMPROVEMENTS

CITY OF SPRINGDALE, ARKANSAS

2023

drawn by:	SP
checked by:	EH
approved by:	RH
QA/QC by:	RH
project no.:	020-1643A
drawing no.:	T_XSV_0201643A
date:	01/17/2023

SHEET
32 of 34

DWG: F:\2020\1501-2000\020-1643-a\40-design\AutoCAD\final plans\Sheets\CROSS SECTIONS\T_XSV_0201643A.dwg
DATE: Jan 17, 2023 9:30am
XREFS: T_TBLK_0201643A
T_BASE_0201643A
USER: ehall

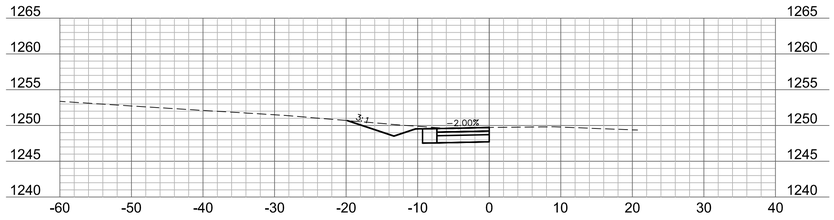

20+79.61

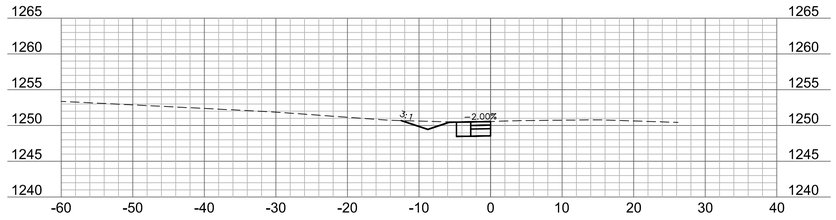

21+59.22

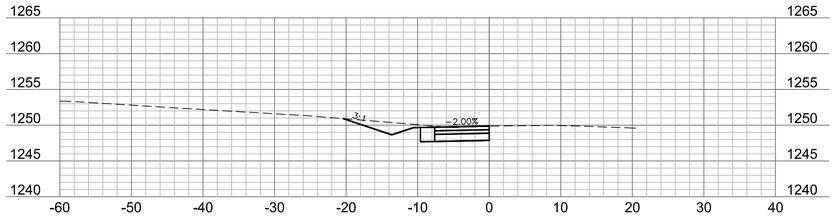

20+75

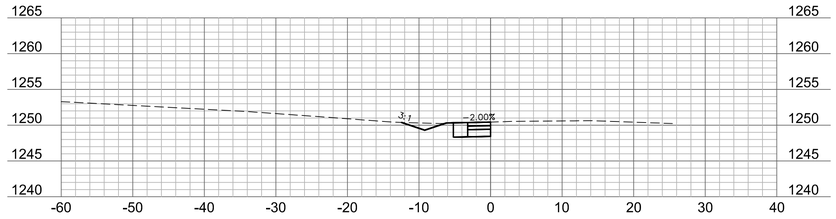

21+50

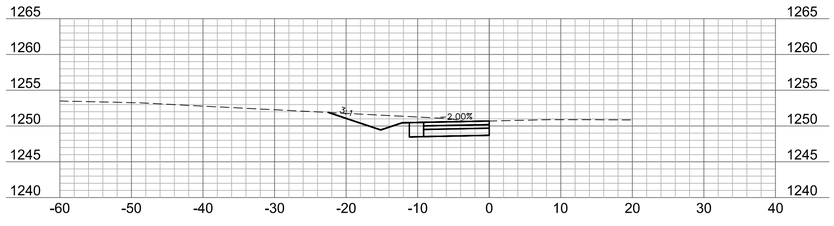

20+50

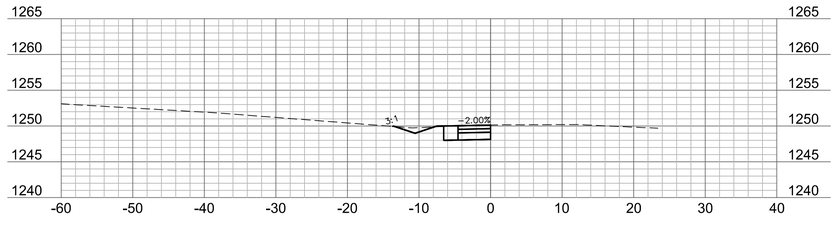

21+25

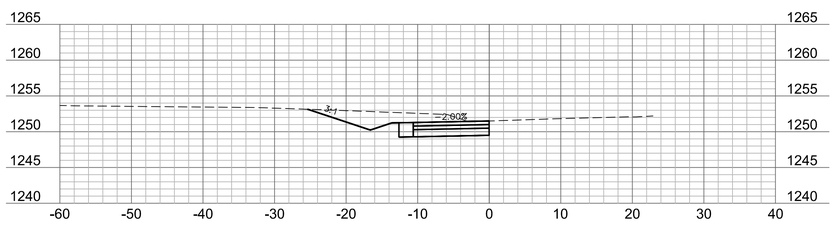

20+25

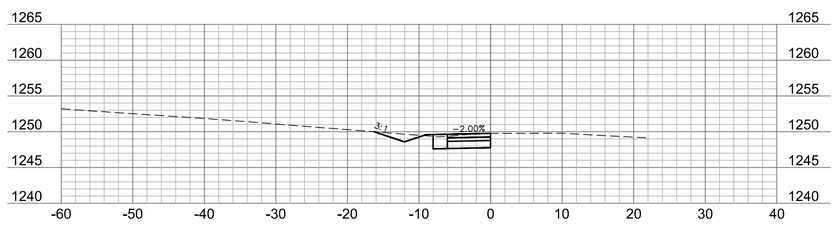

21+00

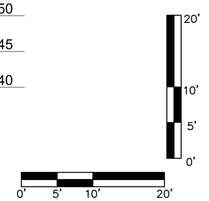

olsson
302 East Millsap Road
Fayetteville, AR 72703
TEL 479.443.3404
www.olsson.com

THIS DOCUMENT WAS ORIGINALLY ISSUED AND SEALED ON JANUARY 17, 2023 BY RICHARD D. HERRICK, A LICENSED PROFESSIONAL ENGINEER IN THE STATE OF ARKANSAS, E-19471

REV. NO.	DATE	REVISIONS DESCRIPTION	BY

REVISIONS

CROSS SECTIONS

WEST MILLER ROAD IMPROVEMENTS

CITY OF SPRINGDALE, ARKANSAS

2023

drawn by:	SP
checked by:	EH
approved by:	RH
QA/QC by:	RH
project no.:	020-1643A
drawing no.:	T_XSV_0201643A
date:	01/17/2023

SHEET
33 of 34

DWG: F:\2020\1501-2000\020-1643-a\40-design\AutoCAD\final plans\Sheets\CROSS SECTIONS\T_XSV_0201643A.dwg USER: ehall
DATE: Jan 17, 2023 9:30am XREFS: T_TBLK_0201643A T_BASE_0201643A

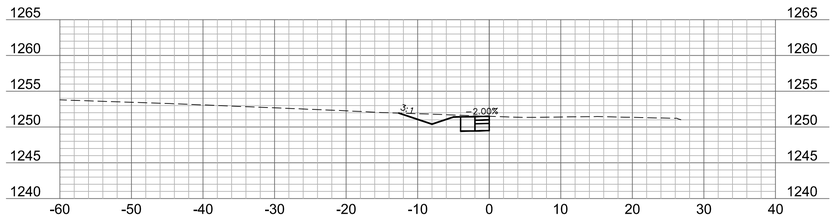

22+00

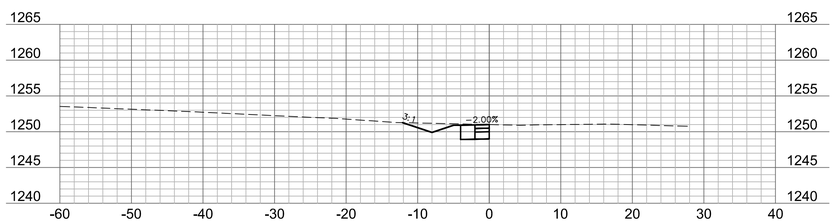

21+75

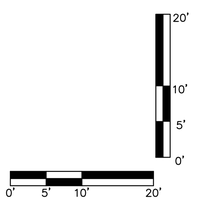

olsson
302 East Millsap Road
Fayetteville, AR 72703
TEL 479.443.3404
www.olsson.com

THIS DOCUMENT WAS ORIGINALLY ISSUED AND SEALED ON JANUARY 17, 2023 BY RICHARD D. HERRICK, A LICENSED PROFESSIONAL ENGINEER IN THE STATE OF ARKANSAS, E-19471

REV. NO.	DATE	REVISIONS DESCRIPTION	BY

REVISIONS

CROSS SECTIONS

WEST MILLER ROAD IMPROVEMENTS

CITY OF SPRINGDALE, ARKANSAS

2023

drawn by: SP
checked by: EH
approved by: RH
QA/QC by: RH
project no.: 020-1643A
drawing no.: T_XSV_0201643A
date: 01/17/2023

SHEET
34 of 34

DWG: F:\2020\1501-2000\020-1643-a\40-design\AutoCAD\final plans\Sheets\CROSS SECTIONS\T_XSV_0201643A.dwg USER: ehall
DATE: Jan 17, 2023 9:30am XREFS: T_TBLK_0201643A T_BASE_0201643A