COMFORT SYSTEMS USA

Quality People. Building Solutions.

Comfort Systems USA (Arkansas), Inc.
P.O. Box 16620
Little Rock, AR 72231
Phone 501-834-3320
Fax 501-834-5416

Date:	09/28/2026
Return Request:	Normal
Project:	EBBING F35 SAPF
Supplier:	Comfort Systems USA
Manufacturer:	Neptronic
Submittal:	Space Humidifiers 23
Submittal Number:	30 00-2.15
Drawing # and Installation:	Mechanical

ARCHITECT
Burns and McDonnell
Kansas City, MO 64114

ENGINEER
Byron Edward K. Fonseca

GENERAL CONTRACTOR
BL Harbert International

MECHANICAL SUBCONTRACTOR
Comfort Systems USA (Arkansas), Inc.
116 Commercial Ave.
Lowell, AR 72745
(479) 770.8992

NOTES:

CSUSA PROJECT NO.
26-5039
jzuber@comfortar.com

SUBMITTAL

F-35: Special Access Program Facility

Submittal	
LOCATION	Fort Smith, Arkansas
DATE	September 9, 2026
PRODUCTS	Space Humidifiers - HUM-101-103 - Neptronic Spec - Other Schedule - Other IOM - Other

TABLE OF CONTENTS

Submittal	Products	Manufacturer	Spec #	Page
1	Space Humidifiers - HUM-101-103	Neptronic	23 30 00	3
2	Spec	Other		16
3	Schedule	Other		18
4	IOM	Other		20

Product 1/4

Submittal

JOB NAME	F-35: Special Access Program Facility
PRODUCT	Space Humidifiers - HUM-101-103
MANUFACTURER	Neptronic
LOCATION	Fort Smith, Arkansas
DATE	September 9, 2026
SPECIFICATION	23 30 00
ENGINEER	US Army Corp of Engineers
CONTRACTOR	Comfort Systems USA
SUBMITTED BY	Joey Smith

Project Information

Project Number:	SK260290007
Project Name:	F-35 Special Access Program Facility Ebbing ANGB
Project Date:	9/2/2026
Customer Name:	Comfort Systems USA
Customer Address:	
Customer Purchase Order Number:	
Location:	Fort Smith, AR
Engineer:	US Army Corps of Engineers
Agent (Salesperson):	Powers of Arkansas / Chad Fisher
Notes:	

Product and Option Schedule:

		Tag		
Air Conditions		HUM-101(Hum-1)	HUM-102(Hum-1)	HUM-103(Hum-1)
External	Temperature			
	R.H.			
Entering	Temperature	77.5°F	77.5°F	77.5°F
	R.H.	29%	29%	40%
Indoor	Temperature	70.0°F	70.0°F	70.0°F
	R.H.	40%	40%	55%
Outdoor Air		Mechanical	Mechanical	Mechanical
Mechanical	Total Air Flow	1200.00CFM	1200.00CFM	1200.00CFM
	Outside Air			
Economizer	Total Air Flow			
	Mixed Air Temp.			
Natural	Building Volume			
	Air Changes/hr			
Humidifier Selection				
Calculated Load		2.7lb/hr	2.7lb/hr	3.5lb/hr
Humidifier Capacity		6.0lb/hr	6.0lb/hr	6.0lb/hr
Humidifier Model		SKE4-N02M-208-1	SKE4-N02M-208-1	SKE4-N02M-208-1
Signal		Modulating	Modulating	Modulating
Power		2kW	2kW	2kW
Voltage/Phase/Cycle		208/1/60hz	208/1/60hz	208/1/60hz
Amperage		10A	10A	10A
Dispersion Selection				
Dimensions Duct/AHU	Width			
	Height			
Air Temp. before humidification				
R.H.	Entering			
	Leaving			
Dispersion Model (# of tubes)		SF SDU4-1-208	SF SDU4-1-208	SF SDU4-1-208
Absorption distance				
Controls and Accessories		NF SHS20, SF Drain Cooler, SF PUMP404CV, SF SK4BAC-MOD	NF SHS20, SF Drain Cooler, SF PUMP404CV, SF SK4BAC-MOD	NF SHS20, SF Drain Cooler, SF PUMP404CV, SF SK4BAC-MOD
Note				

Product Description

CABINET: The compartmentalized enclosure separates the plumbing, controls, and high-voltage sections to simplify access to the different trades required to install, maintain, and commission the humidifier.
- Cold roll steel and stainless base with baked enamel finish. Key locked access doors.
- Plumbing and high-voltage access panels hang on the edge of the humidifier for easy storage.

HUMIDIFIER CONTROL: Microprocessor-based controller with 128x64 pixel LCD, menu-driven configuration, and 8 configuration buttons including auto/off and drain buttons.
- User rights management to display only menu functions available to the type of user logged in
- Quick Config Menu displays only the most commonly used functions for faster and easier installation
- Independent schedules for unit operation and drain cycle
- In-field firmware upgradeable via SD card, USB or BACnet
- Simple viewing and exporting of trending log and alarm log
- Optional BMS integration via BACnet MS/TP or Modbus
- Optional Ethernet module for BACnet IP/Modbus IP and web services for remote configuration and diagnostics

PIPING: Tubing is molded silicone eliminating junctions that could leak and allows for the use of any water type (tap, DI or RO).

VALVES: Inlet: Quiet solenoid. Drain: Motorized pump. A manual drain valve permits draining of the evaporation chamber even during a power failure.

EVAPORATION CHAMBER: Permanent stainless steel evaporation chamber can be removed by accessing only the evaporation chamber – all other components, such as the heating elements and the steam hose remain permanently fixed. Access the evaporation chamber without any tools by removing the water inlet quick connect, disengaging the latches, and sliding the chamber down using the unique rail-guided system. The evaporation chamber hangs freely on the edge of the humidifier eliminating the need to lift the chamber and place it on the floor or work table. The heating elements remain fixed within the enclosure without needing to disconnect power cables or move the heating elements, which reduces manipulation and the weight of the evaporation chamber and saves time.

ELEMENTS: Made of Incoloy 800/825 with a high coefficient of thermal expansion. The elements are self-cleaning due to their expansion and contraction.

AFEC (Anti-foaming Energy Conservation): The patented AFEC system ensures proper water level control under varying water conditions (Hard, soft, RO or DI) by initiating a drain only when foam is detected eliminating the need for surface skimming.

WATER LEVEL DETECTION SYSTEM: The patent-pending water level detection system with redundancy uses three sensors consisting of a high-resolution capacitive sensor and two resistive sensors. The capacitive sensor and dual resistive sensors cross-verify their respective functions, which results in automatic self-zeroing throughout the lifetime of the humidifier. The two types of water level sensors provide redundancy; if one fails, the other sensor takes over and ensures safe and uninterrupted operation while providing a local/remote warning. A fill valve at the top of the sensors' tube flushes and cleans the sensors at every drain cycle to ensure they are free of deposits.

THERMAL PROTECTION: Two-level temperature protection. The first temperature sensor is located inside the evaporation chamber and the second temperature sensor is located on the outside of the evaporation chamber cover. Either sensor stops the humidifier if a high-temperature condition is detected.

ELEMENT MODULATION CONTROL: Modulation is done using SSRs (Solid state relays) with zero crossing detection and firing. The SSRs do not generate spikes, noise or harmonic distortion on the electrical system.

CAPACITY REDUCTION: Using the controller, the capacity of a modulating system can be programmed from 0 to 100% by using the MaxOutput setting.

WATER COOLER: Internal drain water to ensure drain water tempering to 140˚F (60˚C) or less.

ETL-C-US listed.

SKE4-N Series Humidifier

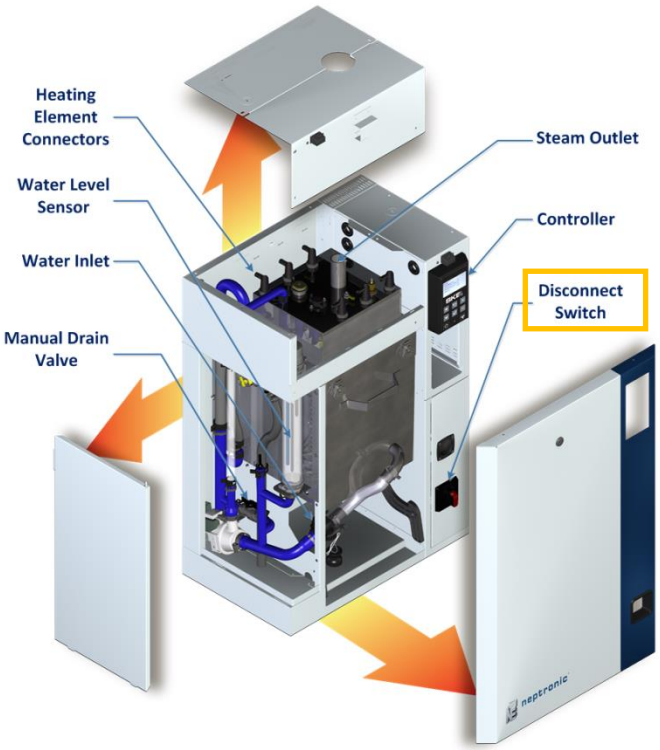

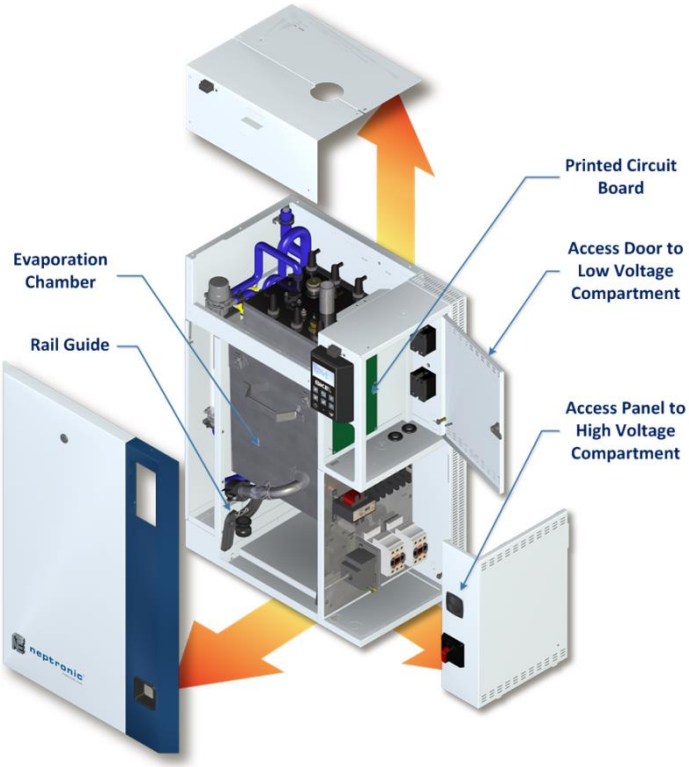

SKE4-N Monitoring and Control Panel

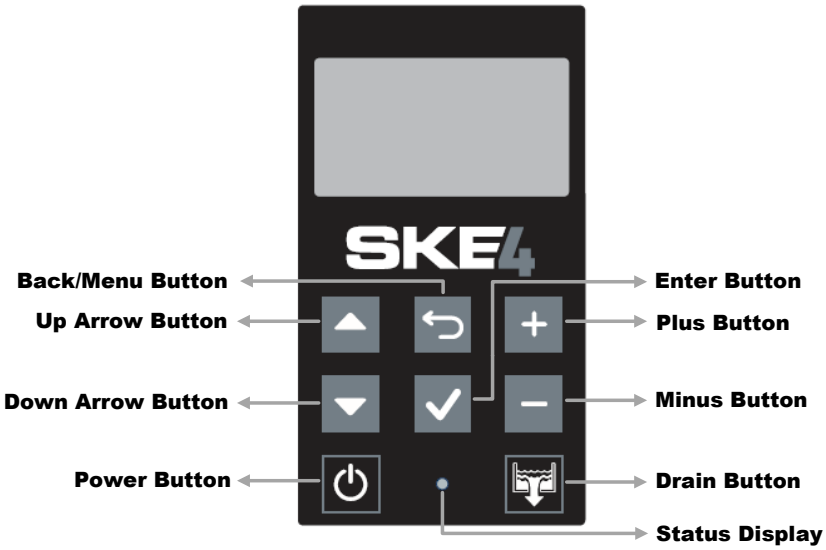

Feature		Description
Status Display	☼ (Blue)	Indicates that the humidifier is turned on. The LED will begin blinking as the system is initializing.
	☼ (Red)	Indicates that the alarm is issuing a warning and that the system must be verified.
	O (Off)	Indicates that the humidifier is turned off.
Power Button	⏻	The power button is used to turn the humidifier on or off. Must be pressed and held for 3 seconds to perform the related action, in order to prevent accidental activation. Even when the humidifier is powered off, the controller remains operational.
Drain Button		The drain button is used to manually activate the drain cycle. Must be pressed and held for 3 seconds to perform the related action, in order to prevent accidental activation. Even when the humidifier is powered off, a manual drain cycle may be initiated. *Once the manual drain cycle is completed, the system will automatically be powered off. To turn the humidifier back on, press and hold the power button.*
Up and Down Arrow Buttons	▲ ▼	The up arrow button is used to scroll to the next menu item or parameter. The down arrow button is used to scroll to the previous menu item or parameter.
Plus and Minus Buttons	+ –	The plus button is used to increase the value of the displayed parameter. The minus button is used to decrease the value of the displayed parameter.
Back/Menu Button	↩	The back/menu button is used to go to previous menu or to access the Main Menu page from the Idle Screen.
Enter Button	✓	The enter button is used to advance to the next sub-menu, to access selected option or to confirm set parameter value.

Dimensions:

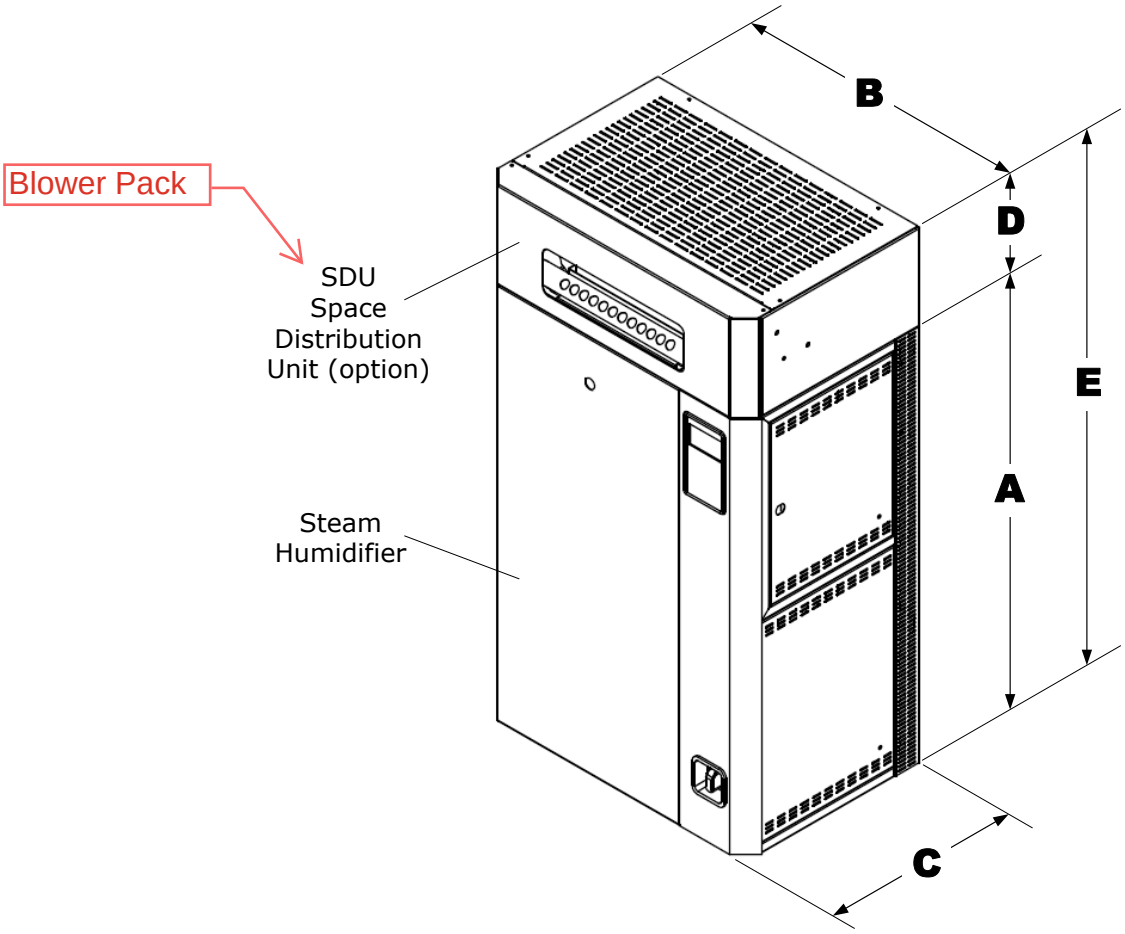

Dimensions and Weight

Tag	Model	Dimensions of the Cabinet (in)							Option SDU Model Weight (lb)
		A	B	C	D	E	Weight (lb)		
							Empty	Full of Water	
HUM-101	SKE4-N02M	23	19-3/8	13-3/4	6-3/4	29-3/4	71	85	86
HUM-102	SKE4-N02M	23	19-3/8	13-3/4	6-3/4	29-3/4	71	85	86
HUM-103	SKE4-N02M	23	19-3/8	13-3/4	6-3/4	29-3/4	71	85	86

Positioning and Installation

General Recommendations

The humidifier must be installed in an easily accessible location to allow proper access for inspection and servicing of the humidifier. The unit must never be installed in a location where unusual malfunction of the unit can cause damage to the building structure or to costly equipment.

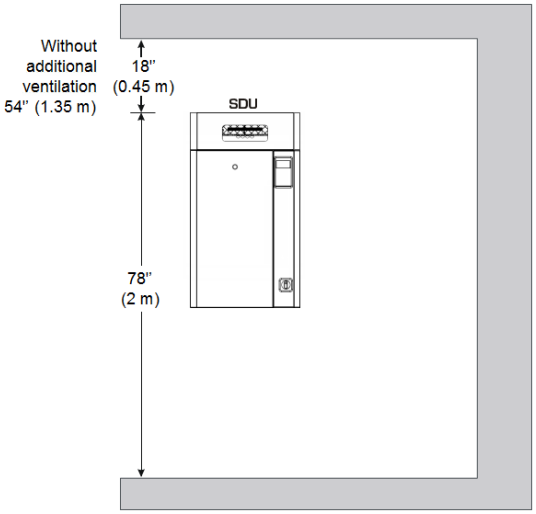

Positioning

The SDU must be installed in an environment where the air is relatively clean. The humidifier must be mounted such that the SDU fan section is at least 78" (2m) above the floor.
A minimum clearance of 18" (0.45m) from the ceiling must be allocated to avoid ceiling and wall condensation.
If additional ventilation is not present, the fan must have a clearance from the ceiling of at least 54" (1.35m). Proper ventilation must be observed to avoid ceiling and wall condensation.
A clearance of at least 48" (1.2m) from the front of the unit and 12" (0.3m) from both sides is recommended for comfortable access and service. The humidifier must be installed in a well-ventilated area and the ambient temperature must not exceed 86°F (30˚C).

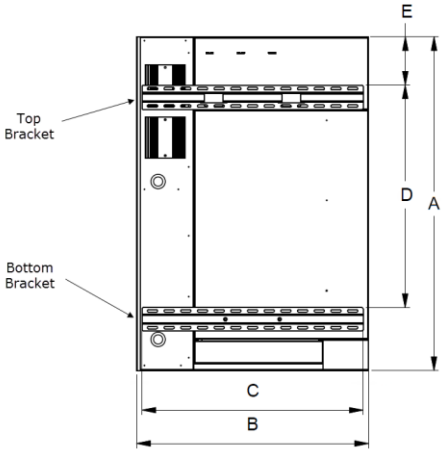

Wall Mounting

The mounting of the humidifier on the wall is to be done by using the supplied brackets and screws.
After securing the brackets to the support or wall using 4 screws per bracket, the top inserts located on the back of the humidifier cabinet must be placed into the open slots of the top bracket.
By opening the front door of the humidifier, secure the humidifier to the bottom bracket by drilling screws in the center of the bracket.

Tag	Model	Dimensions (in)				
		A	B	C	D	E
HUM-101	**SKE4-N02M**	23	19-3/8	18-3/8	16-1/8	7/8
HUM-102	**SKE4-N02M**	23	19-3/8	18-3/8	16-1/8	7/8
HUM-103	**SKE4-N02M**	23	19-3/8	18-3/8	16-1/8	7/8

Plumbing Connections

Shutoff Valve, Water Strainer and Water Hammer Arrestor:

In order to facilitate servicing, install a shutoff valve in the water supply line close to the humidifier.
It is also recommended to install a standard water strainer in the water supply line and to install a water hammer arrestor, in order to absorb hydraulic shock and minimize water hammer when the fill valve closes.

Drain Connection:

Use standard copper hydraulic pipes placed underneath the humidifier to provide the connection between the unit and the two drain connections, located on the underside of the unit. Ensure that the drain pipe dimension is sufficient, especially if more than one unit is evacuating into the same drain line.

- ✓ Evaporation chamber water drain temperature: 140°F (60°C)

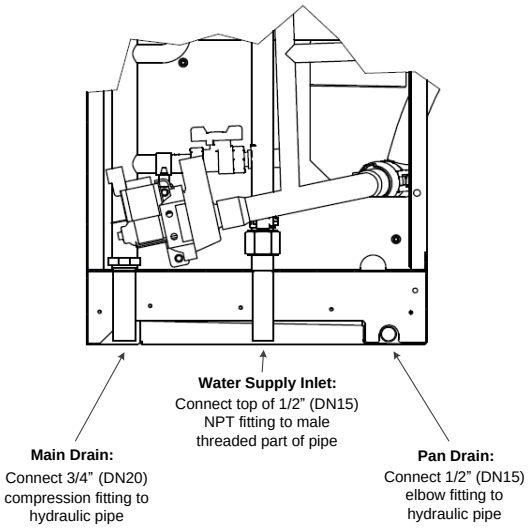

Plumbing connections

Water Supply:

The water inlet specifications are:

- ✓ Inlet water pressure: 10 to 70 psig (0.7 to 4.8 bars)
- ✓ Maximum temperature: 86˚F (30˚C) maximum
- ✓ ½" (DN15) standard copper water line connection

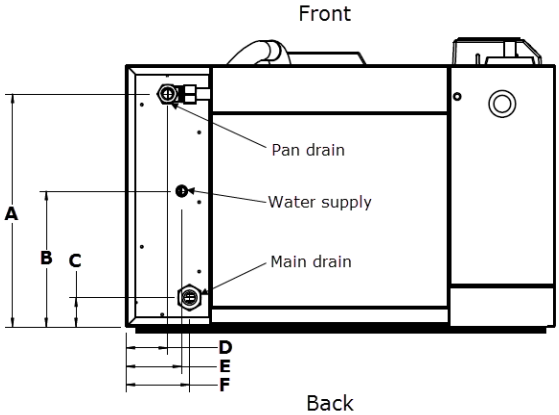

(Bottom view)

Tag	Model	Dimensions (in)					
		A	B	C	D	E	F
HUM-101	SKE4-N02M	10-5/8	7	1-1/2	2	2-7/8	3-1/4
HUM-102	SKE4-N02M	10-5/8	7	1-1/2	2	2-7/8	3-1/4
HUM-103	SKE4-N02M	10-5/8	7	1-1/2	2	2-7/8	3-1/4

Wiring Diagram (HUM-101,HUM-102,HUM-103)

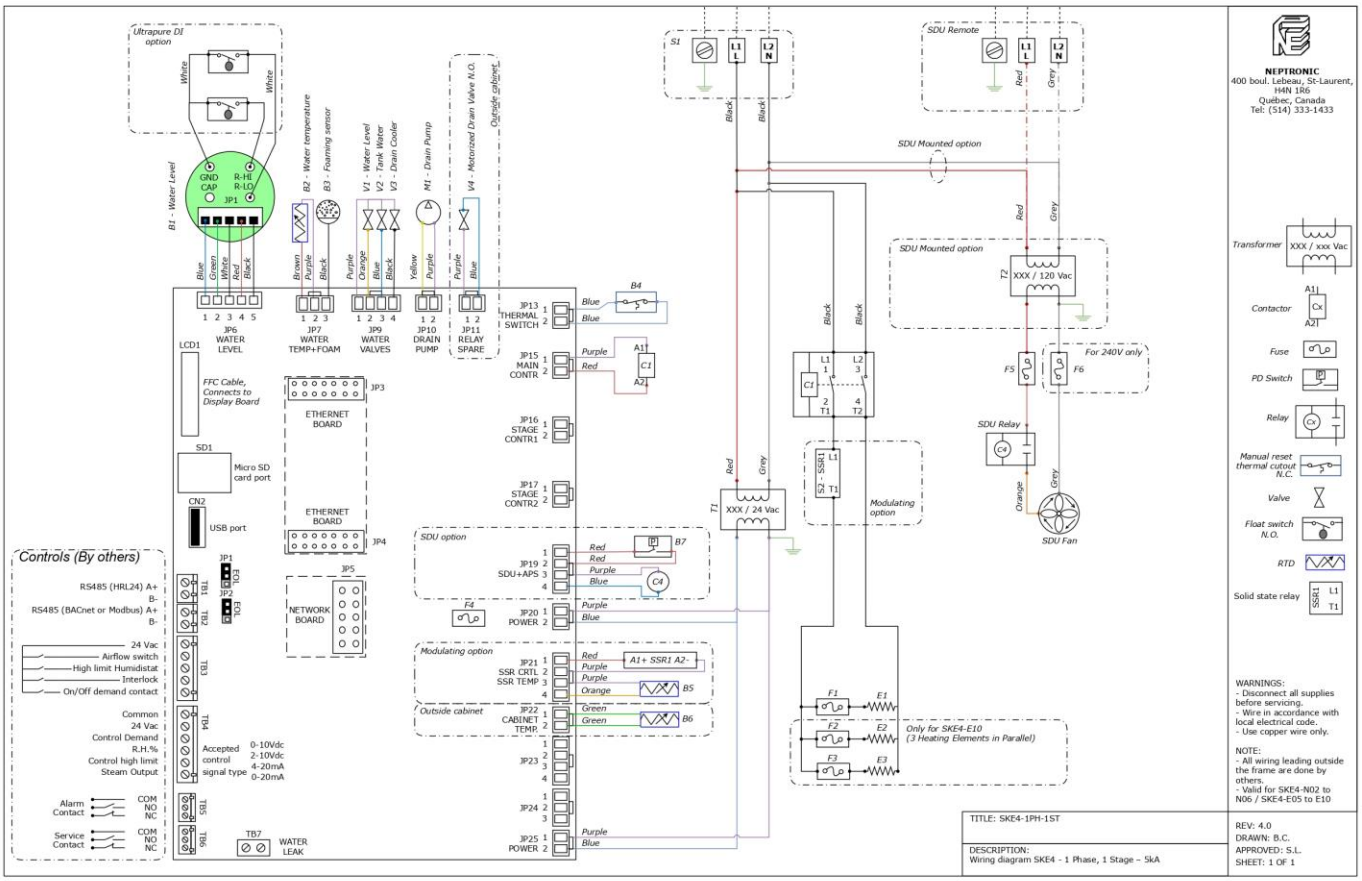

Control Terminals

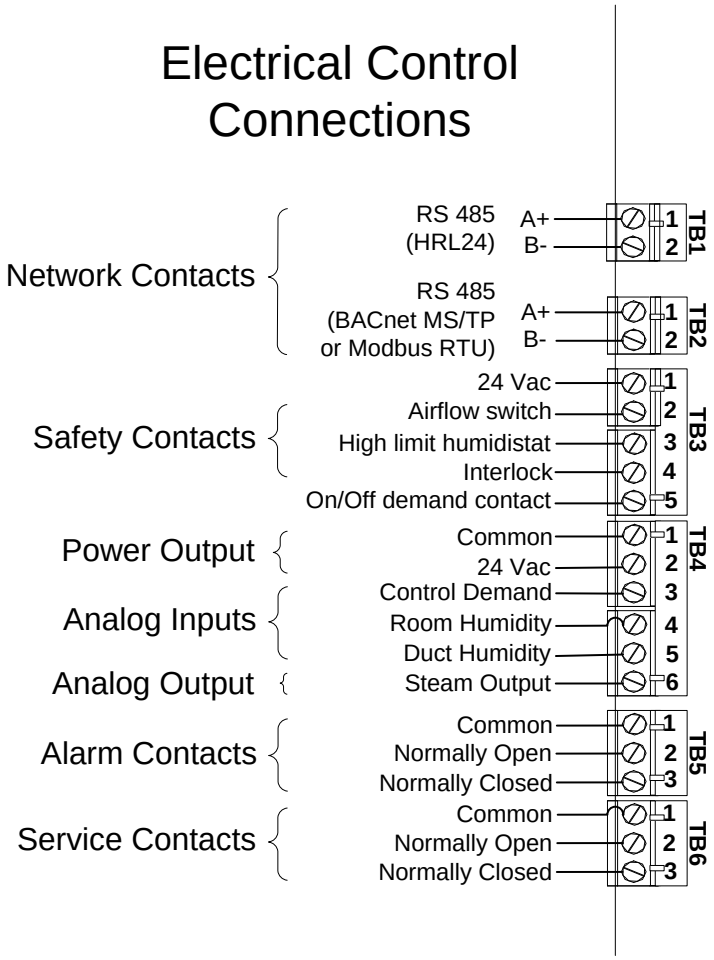

Safety Contacts

The **Airflow switch** contact must be wired between terminals TB3 1&2. If this contact opens, operation of the SKE4 unit will stop. The unit will display the airflow switch as open, but will not generate an alarm. If an airflow switch is not used, install a jumper between terminals TB3 1&2.

The **High limit humidistat** contact must be wired between terminals TB3 1&3. If this contact opens, operation of the SKE4 unit will stop and an **alarm** message will be displayed. If a high limit humidistat is not used, install a jumper between terminals TB3 1&3.

The **Interlock** must be wired between terminals TB3 1&4. If this contact opens, operation of the SKE4 unit will stop. The unit will display the Interlock as open, but will not generate an alarm. If Interlock is not used, install a jumper between terminals TB3 1&4.

Dry Contacts

Two series of volt free contacts are provided: **Alarm Contacts** and **Service Contacts**.
Each series has one Normally Closed contact and one Normally Open contact.
These contacts are used to switch a low voltage, ideally **24V**, with a switching current of no more than **3 Amps**.
It is recommended to use the Normally Closed contact, as this contact will open in the event of a humidifier fault.

Control Wiring Diagram (HUM-101, HUM-102, HUM-103)

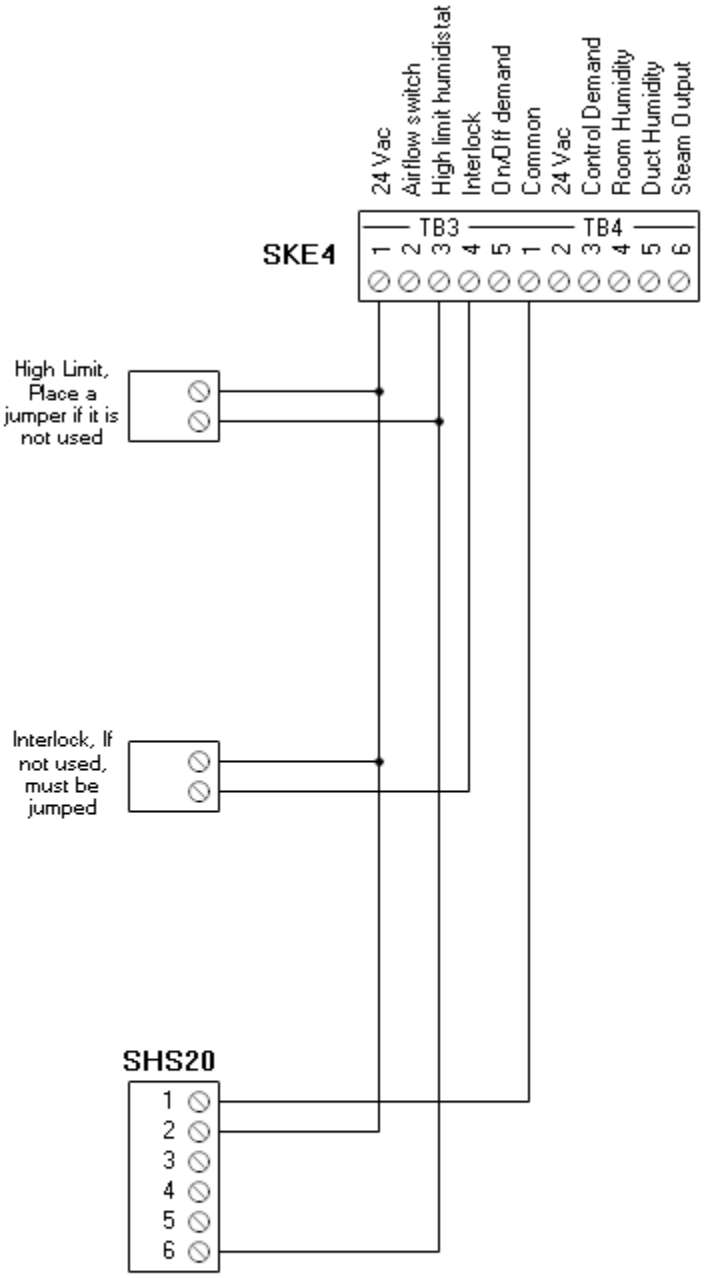

Controls & Accessories

Item	Model	Description
	SHS20	Wall mount room ON/OFF high limit humidistat. Adjustable range: 20-90% RH Built-in humidity sensor.
	Drain Cooler	The drain cooler has a stainless steel cylindrical mixing chamber that blends cold water with discharged water from a humidifier or condensate of a steam dispersion system. The result is drain water cooled to a temperature below 140°F (60°C).
BACnet™	BACnet MS/TP	This product provides a BACnet network interface between BACnet client devices and Neptronic humidifier devices. This product uses the BACnet Master Slave/Token Passing (MS/TP) protocol at the BACnet MAC layer.
Modbus	Modbus RTU	This product uses Modbus communication protocol over serial line in the RTU mode and provides a Modbus network interface between client devices and Neptronic humidifier devices. This product supports Baud Rates of 9600, 19200, 38400, 57600; and supports RTU Slave, 8 bits with configurable parity and stop bits via menu.
	PUMP404CV	Drain pump use to collect and automatically remove the drain water produced by the humidifier.

Condensate Pump

Product 2/4

Submittal	
JOB NAME	F-35: Special Access Program Facility
PRODUCT	Spec
MANUFACTURER	Other
LOCATION	Fort Smith, Arkansas
DATE	September 9, 2026
ENGINEER	US Army Corp of Engineers
CONTRACTOR	Comfort Systems USA
SUBMITTED BY	Joey Smith

2.14.3 Condensate Drain Lines

Provide and install condensate drainage for each item of equipment that generates condensate in accordance with Section 22 00 00 PLUMBING, GENERAL PURPOSE except as modified herein.

2.14.4 Backflow Preventers

The requirements for backflow preventers are specified in Section 22 00 00 PLUMBING, GENERAL PURPOSE.

2.14.5 Insulation

The requirements for shop and field applied insulation are specified in Section 23 07 00 THERMAL INSULATION FOR MECHANICAL SYSTEMS.

2.14.6 Controls

The requirements for controls are specified in Section 23 09 00 INSTRUMENTATION AND CONTROL FOR HVAC, and Section 23 09 23.02 BACNET DIRECT DIGITAL CONTROL FOR HVAC AND OTHER BUILDING CONTROL SYSTEMS.

2.15 SPACE HUMIDIFIERS

Provide resistive element humidifier to generate steam for use with potable water. Humidifier must be packaged with a blower pack, wall mounted, local display HMI, and steam generation using resistive heating element. Humidifier must accept potable water with a minimum water conductivity of 80 microseimens per centimeter. Resistive element humidifier must have a modulating output between 4 and 100 percent of rated capacity, control accuracy up to plus or minus 1 percent RH. Provide space humidifier with an externally mounted condensate pump. Condensate pump must be rated for steam humidifier condensate temperatures in compliance with the manufacturer requirements.

PART 3 EXECUTION

3.1 EXAMINATION

After becoming familiar with all details of the work, verify all dimensions in the field, and advise the Contracting Officer of any discrepancy before performing the work.

3.2 INSTALLATION

a. Install materials and equipment in accordance with the requirements of the contract drawings and approved manufacturer's installation instructions. Accomplish installation by workers skilled in this type of work. Perform installation so that there is no degradation of the designed fire ratings of walls, partitions, ceilings, and floors.

b. No installation is permitted to block or otherwise impede access to any existing machine or system. Install all hinged doors to swing open a minimum of 120 degrees. Provide an area in front of all access doors that clears a minimum of 3 feet. In front of all access doors to electrical circuits, clear the area the minimum distance to energized circuits as specified in OSHA Standards, part 1910.333 (Electrical-Safety Related work practices)and an additional 3 feet.

Product 3/4

Submittal	
JOB NAME	F-35: Special Access Program Facility
PRODUCT	Schedule
MANUFACTURER	Other
LOCATION	Fort Smith, Arkansas
DATE	September 9, 2026
ENGINEER	US Army Corp of Engineers
CONTRACTOR	Comfort Systems USA
SUBMITTED BY	Joey Smith

HUMIDIFIER SCHEDULE (HUM)

TAG	LOCATION	MOUNTING	TYPE	MIN. CAPACITY (LBS/HR)	INPUT (KW)	ELECTRICAL VOLTS	ELECTRICAL PHASE	ELECTRICAL FLA	WEIGHT (LBS)	NOTES
HUM-101	143 - VAULT 1 SERVER	WALL MOUNT	RESISTIVE STEAM HUMIDIFIER	3	3.7	208	1	17.8	63	1,2,3,4,5
HUM-102	154 - VAULT 2 SERVER	WALL MOUNT	RESISTIVE STEAM HUMIDIFIER	3	3.7	208	1	17.8	63	1,2,3,4,5
HUM-103	167 - VAULT 3 SERVER	WALL MOUNT	RESISTIVE STEAM HUMIDIFIER	3	3.7	208	1	17.8	63	1,2,3,4,5

NOTES:
1. PROVIDE WITH INTEGRAL BLOWER PACK MOUNTED FLUSHED WITH TOP OF HUMIDIFIER.
2. INSTALL PER MANUFACTURER REQUIREMENTS AND CLEARANCES.
3. ELECTRICAL DISCONNECT PROVIDED BY DIVISION 26.
4. HUMIDIFIER MUST ACCEPT A MINIMUM WATER CONDUCTIVITY OF 80 MICROSIEMENS PER CENTIMETER.
5. PROVIDE HUMIDIFIER WITH AN EXTERNALLY MOUNTED CONDENSATE PUMP RATED FOR STEAM HUMIDIFIER CONDENSATE TEMPERATURES IN COMPLIANCE WITH THE MANUFACTURER REQUIREMENTS. CONDENSATE PUMP MUST BE POWERED SEPARATELY FROM THE HUMIDIFIER WITH 115V/1PH/60HZ, 1/2 HP.

AIR COOLED CHILLER (CH)

TAG	ALTITUDE (FT)	COOLING CAPACITY (TONS)	COMPRESSOR QUANTITY	COMPRESSOR TYPE	EFFICIENCY FULL LOAD EER	EFFICIENCY IPLV	EVAPORATOR FLUID TYPE	EVAPORATOR FLOW (GPM)	EVAPORATOR EWT (DEG. F)	EVAPORATOR LWT (DEG. F)	EVAPORATOR PRESSURE DROP (FT W.C.)	CONDENSER DESIGN AMBIENT (DEG. F)	CONDENSER FAN QUANTITY	ELECTRICAL VOLTS	ELECTRICAL PHASE	ELECTRICAL MCA	ELECTRICAL TOTAL POWER (KW)	WEIGHT (LBS.)	NOTES
CH-101	449	54.5	4	SCROLL	9.9	16.5	WATER	93.7	55.9	42	10	105	4	460	3	137	64.28	7855	1,2,3,4,5,6,7,8
CH-102	449	54.5	4	SCROLL	9.9	16.5	WATER	93.7	55.9	42	10	105	4	460	3	137	64.28	7855	1,2,3,4,5,6,7,9

NOTES:
1. OPERATING FLUID IS WATER.
2. PROVIDE SOUND ATTENUATION KIT.
3. PROVIDE CONTROL PANEL WITH INTERFACE TO EMCS SYSTEM.
4. PROVIDE WITH MANUFACTURER'S DISCONNECT, VFD, AND SINGLE POINT POWER CONNECTION IN ACCORDANCE WITH DIVISION 26 SPECIFICATIONS.
5. PROVIDE WITH MANUFACTURER'S BUFFER TANK. MINIMUM SIZE SHALL BE 120 GALLONS.
6. PROVIDE CHILLER WITH DUAL PUMP PACKAGE. PUMPS SHALL BE CAPABLE OF FULL CHILLER FLOW AND A MINIMUM 25 FT WG HEAD.
7. PROVIDE CHILLER WITH EVAPORATOR AND BUFFER TANK HEATERS. EACH HEATER WILL BE POWERED BY SEPARATE 115V / 1PH / 60HZ / 20 AMP POWER CONNECTIONS.
8. PACKAGED PUMPS SHALL BE IDENTIFIED AS CHWP-104 & CHWP-105.
9. PACKAGED PUMPS SHALL BE IDENTIFIED AS CHWP-106 & CHWP-107.

HVAC PUMP PACKAGE SCHEDULE

TAG	PUMP TAGS	LOCATION	TYPE	SERVICE	SYSTEM	FLUID TYPE	FLUID TEMP (DEG. F)	PUMP QUANTITIES ACTIVE	PUMP QUANTITIES STANDBY	SYSTEM FLOW (GPM)	PER PUMP FLOW (GPM)	PER PUMP HEAD (FT W.C.)	PER PUMP EFFICIENCY (%)	MOTOR TYPE	MOTOR HP	MOTOR BHP	MOTOR RPM	MOTOR SPEED CONTROL	ELECTRICAL VOLTS	ELECTRICAL PHASE	ELECTRICAL FLA	NOTES
CPP-101	CHWP-101, CHWP-102, CHWP-103	251 - MECHANICAL	MULTISTAGE INLINE	SECONDARY LOOP	CHILLED WATER	WATER	42	2	1	187	93.7	60	72	TEFC	5	2	3600	VFD	460	3	13.4	1
HPP-101	HWP-101, HWP-102	251 - MECHANICAL	MULTISTAGE INLINE	VARIABLE PRIMARY	HEATING HOT WATER	WATER	150	1	1	68	68	57	72	TEFC	2	1.41	3600	VFD	460	3	6.3	1

NOTES:
1. PROVIDE PUMP PACKAGE WITH SINGLE POINT ELECTRICAL CONNECTION.

ELECTRIC UNIT HEATER SCHEDULE (CUH/EUH)

TAG	LOCATION	ALTITUDE (FT)	ORIENTATION	HEATING COIL CAPACITY (KW)	HEATING COIL TYPE	ELECTRICAL VOLTS	ELECTRICAL PHASE	ELECTRICAL FLA	NOTES
CUH-101	101 - VESTIBULE	439	VERTICAL CABINET	7	ELECTRIC	460	3	7.3	1
CUH-102	103 - VESTIBULE	439	VERTICAL CABINET	7	ELECTRIC	460	3	7.3	1

NOTES:
1. PROVIDE WITH MANUFACTURER'S DISCONNECT FOR A SINGLE-POINT ELECTRICAL CONNECTION PER DIVISION 26 SPECIFICATIONS.

BOILER SCHEDULE (HWB)

TAG	LOCATION	TYPE	ALTITUDE (FT)	PRESSURE RATING (PSIG)	MIN. GROSS OUTPUT (MBH)	WATERSIDE FLUID TYPE	WATERSIDE LWT (DEG. F)	WATERSIDE EWT (DEG. F)	WATERSIDE FLOW (GPM)	WATERSIDE PRESSURE DROP (FT W.C.)	ELECTRICAL VOLTS	ELECTRICAL PHASE	ELECTRICAL FLA	WEIGHT (LBS)	NOTES
HWB-101	251 - MECHANICAL	ELECTRIC	449	150	519.3	WATER	150	126	34	2	480	3	196	488	1,2,3
HWB-102	251 - MECHANICAL	ELECTRIC	449	150	519.3	WATER	150	126	34	2	480	3	196	488	1,2,3

NOTES:
1. PROVIDE EXTERNAL CONDENSATE NEUTRALIZATION KIT COMPLETE WITH VISUAL INSPECTION AND ACCESS FOR MEDIA REPLACEMENT.
2. BOILER SHALL HAVE MINIMUM 5:1 TURNDOWN RATIO.
3. PROVIDE FACTORY 75 PSI ASME RELIEF VALVE AND LOW WATER CUTOFF WITH MANUAL RESET AND TEST.

AIR SEPARATOR SCHEDULE (AS)

TAG	LOCATION	SYSTEM	TYPE	FLOW (GPM)	PRESSURE DROP (FT W.G.)	CONNECTION TYPE	CONNECTION SIZE (IN)	MAX PRESSURE (PSIG)	NOTES
AS-101	251 - MECHANICAL	CHW	TANGENTIAL	187.3	9.5	FLANGED	4	125	1,2,3
AS-102	251 - MECHANICAL	HHW	TANGENTIAL	68	9.5	FLANGED	2 1/2	125	1,2,3

NOTES:
1. OPERATING FLUID IS WATER.
2. AIR SEPARATOR SHALL BE THE TANGENTIAL TYPE WITH STRAINER.
3. AIR SEPARATOR SHALL BE ASME SECTION VIII, DIVISION 1 RATED.

TANK SCHEDULE

TAG	LOCATION	ORIENTATION	SYSTEM	MIN. TANK VOLUME (GAL)	MIN. TANK ACCEPTANCE VOLUME (GAL)	RELIEF VALVE SETPOINT (PSI)	DIMENSIONS DIAMETER (IN)	DIMENSIONS LENGTH / HEIGHT (IN)	NOTES
ET-101	251 - MECHANICAL ROOM	VERTICAL	HEATING HOT WATER	8	3	65	16	30	1
ET-102	251 - MECHANICAL ROOM	VERTICAL	CHILLED WATER	16	8	65	16	30	1

NOTES:
1. PROVIDE TANK THAT MEETS OR EXCEEDS BOTH VOLUME REQUIREMENTS EVEN IF FULL ACCEPTANCE TANK IS PROVIDED.

CHEMICAL POT FEEDER SCHEDULE (CP)

TAG	SERVICE	TYPE	TANK CAPACITY (GAL)	TANK DIAMETER (IN)	TANK HEIGHT (IN)	CONNECTION SIZE (IN)	MAX PRESSURE (PSI)
CP-101	CHILLED WATER	BYPASS FEEDER	5	10	29 3/4	3/4	300
CP-102	HOT WATER	BYPASS FEEDER	5	10	29 3/4	3/4	300

LICENSED PROFESSIONAL ENGINEER
BYRON EDWARD K. FONSECA
M 41419
MECHANICAL
STATE OF CALIFORNIA
07/23/2025

US Army Corps of Engineers ®

MARK	DESCRIPTION	DATE
0	READY-TO-ADVERTISE (RTA) SUBMITTAL	JUL 2025

ISSUE DATE: JUL 2025
SOLICITATION NO.: W912TS25RA001
CONTRACT NO.: W912TS24T0007
DESIGNED BY: B. FONSECA
DRAWN BY: J. SMITH
CHECKED BY: C. DATE
SUBMITTED BY: B. STREEBIN
SIZE: ANSI D
FILE NAME:

US ARMY CORPS OF ENGINEERS
LITTLE ROCK DISTRICT
LITTLE ROCK, ARKANSAS

BURNS AND McDONNELL
9400 WARD PARKWAY,
KANSAS CITY, MO 64114
165438

F-35: SPECIAL ACCESS PROGRAM FACILITY
EBBING AIR NATIONAL GUARD BASE (ANGB), FORT SMITH, ARKANSAS

HVAC SCHEDULES

SHEET ID
M-605

READY-TO-ADVERTISE (RTA) SUBMITTAL

Product 4/4

Submittal

JOB NAME	F-35: Special Access Program Facility
PRODUCT	IOM
MANUFACTURER	Other
LOCATION	Fort Smith, Arkansas
DATE	September 9, 2026
ENGINEER	US Army Corp of Engineers
CONTRACTOR	Comfort Systems USA
SUBMITTED BY	Joey Smith

Steam Humidifier

SKE4-N Series

Installation Instructions and User Manual

READ AND SAVE THESE INSTRUCTIONS

C ETL LISTED US
Intertek
4011008

Foreword

Neptronic Company Overview

Founded in 1976, we're a private corporation that designs, manufactures and distributes products for the HVAC industry. Our product line includes intelligent controllers, electronic actuators, actuated valves, humidifiers and electric heaters.

Our products are designed and manufactured by over 250 dedicated employees in our 7,500 m^2 (80,000 ft^2) state-of-the-art facility located in Montreal, Canada. Using a vertical integration model, our entire manufacturing chain is under one roof, from software and hardware development, to SMT circuit board assembly, to sheet metal fabrication, to product testing, ensuring that our products are engineered to last.

We currently hold several national and international patents and with our continued commitment to research and development, we provide innovative products and technologies for the ever-evolving challenges of the HVAC industry. Exporting over 70% of our sales, we have an exclusive distribution network around the globe that provides comprehensive solutions to our worldwide customers.

About the Manual

These installation and operation instructions have been developed to facilitate the installation of the Steam Humidifier.

- The strict application of these instructions will ensure the conformity of your installation and operation as per the manufacturer's recommendations.
- The application of these instructions is one of the conditions for the application of the warranty.
- The application of these instructions does not ensure, at any time conformity to procedures, regulation or local codes, regarding electric installation and connection to local water supply.

This product has been declared to conform to the applicable Canadian and American safety standards and directives and bear the ETL (c) & (us) mark. The Certificate for ETL is available, upon request to the manufacturer.

2026©: All rights reserved. This document cannot be reproduced totally or partially by any means whether, electronic, mechanical, photocopy, recording or other, without prior written authorization of Neptronic.

Electricity

All work concerned with electrical installation MUST only be performed by skilled and qualified technical personnel, such as an electrician or a technician with appropriate training. The customer is always responsible for ensuring the suitability of the technical personnel.
Please observe the local regulations concerning the provision of electrical installations.

Correct Use

Neptronic systems and its products are designed only for humidification use. Any other application is not considered appropriate for the intended purpose. The manufacturer cannot be made liable for any damage resulting from incorrect use.

General Warranty

This product is subject to the terms and conditions described at http://www.neptronic.com/Sales-Conditions.aspx.

Handling and Lifting

Lifting or handling MUST be carried out by trained and qualified personnel. Ensure that the lifting operation has been properly planned, assessed for risk and that the equipment has been checked by a competent Health & Safety representative, and effective control measures are in place.

It is the customer's responsibility to ensure that the operators are trained in handling heavy goods and to enforce the relevant lifting regulations.

The Steam Humidifier MUST be handled and lifted with care at all times and remain in its original packaging for as long as possible, prior to installation.

The Steam Humidifier package may be carried using a forklift from the underside. Exercise caution before lifting to ensure that the load is balanced.

Unpacking

The Steam Humidifier is shipped inside carton boxes or in a wooden crate. Remove packing and skids prior to commissioning.

Contents

Handling and Lifting 2
Overview 5
List of Accessories Supplied 5
Available Options 5
Description of Systems 5
Visual Overview 6
Standard Humidifier Unit 8
Dimensions and Weight 8
Humidifier with Space Distribution Unit 9
Humidifier with Space Distribution Unit - Dimensions and Weight 9
Humidifier with OSHPD Preapproval (OSP) 10
Dimensions and Weight (OSP) 10
Weather Proof Enclosure 11
Weather Proof Enclosure - Dimensions and Weight 11
Weather Proof Enclosure - OSHPD Preapproval (OSP) 12
Weather Proof Enclosure - Dimensions and Weight (OSP) 12
Output and Power Consumption - Humidifier 13
Mechanical Installation 14
General Recommendations 14
Location 14
Positioning 15
Wall Mounting 16
Wall Mounting - Humidifier with OSHPD Preapproval (OSP) 19
Positioning - Humidifier with SDU 22
Absorption Distance of the SDU4 22
Maintenance of the SDU 22
Remote Installation - Humidifier with SDU 23

Wall Mounting the Remote SDU 24
Remote SDU Cover Installation (Option) 25
Positioning and Mounting - Weather Proof Enclosure Unit 26
General Recommendations 26
Steam Dispersion System 27
Steam Dispersion System Selection 27
Positioning S.A.M. and S.A.M.E2 29
Placement of Steam Pipe in Horizontal Duct 30
Placement of Steam Pipe in Vertical Duct 31
Steam Output Connections 32
Installation 32
General Recommendations 32
S Trap Installation on the Steam Line 33
Position of Steam Outputs 34
Plumbing Connections 35
Water Supply Connections 37
Water Drain Connections 38
Weather Proof Enclosure Plumbing Connection 39
Weather Proof Enclosure Water Drain Valve 40
Water Treatment Guidelines 40
Chloride Concentration in Water Supply 41
Electrical Connections 42
Power Supply Hole Locations 43
Low Voltage Control Connections - Printed Circuit Board 44
1 Phase, 1 Stage - SKE4-N02 to N06 44
3 Phases, 1 Stage - SKE4 N04 to N32 45
3 Phases, 2 Stages - SKE4 N20L to N60 46
3 Phases, 3 Stages - SKE4 N30X to N100 47
Network Communication (TB1 and TB2) 48
Safety Contact Connections (TB3) 48
Control Analog Connections (TB4) 49
Dry Contacts (TB5 and TB6) 49
ON/OFF Humidifier 49
Modulating Humidifier 50
Controls Placement (Steam Dispersed into a Duct or AHU) 51
Controller Configuration 52
Control Panel Features 52
Idle Screen 53
Menu Access 53
Menu Navigation and Configuration 54
Menu - General [Level 1 - No password required] 55
Menu - User Settings [Level 2 - Requires level 2 (or higher) password to access] 58

Menu - Service [Level 3 - Requires level 3 (or higher) password to access] ... 59
Menu - Installation [Level 4 - Requires level 4 (or higher) password to access] ... 60
Menu - Integration [Level 5 - Requires level 5 password to access] ... 64
List of Alarms ... 67
Manual Water Level Calibration ... 69
Start-up Procedure ... 71
Initial Verification ... 71
Start-Up ... 72
Service ... 73
Cleaning the Evaporation Chamber ... 73
Troubleshooting ... 78
Exploded View and Bill of Material ... 79
Exploded View ... 79
Bill of Material ... 81
Notes ... 84

Overview

List of Accessories Supplied

The following accessories are supplied with the SKE4 Steam Humidifier:

- 2 sets of keys.
- 2 adjustable collars per steam outlet for the connection of the steam hose.
- 1 hydraulic female compression fitting ¾" (DN20) for the drain output of the evaporation chamber.
- 1 hydraulic female elbow fitting ½" (DN15) for the drain output of the drip pan (OSHPD models with metal base only, factory installed on models with plastic base).
- 2 brackets and screws for wall mounting the humidifier (models SKE4-N02 to N60 only).
- 1 Installation Instructions and User Manual.

Available Options

The following options are available when purchasing a SKE4 humidifier:

- Modulating control humidifier (Suffix M, i.e. SKE4-N20M)
- Humidifier for a system supplied with Deionized water or Reverse Osmosis water, having less than 0.1 ppm of dissolved solids
- Space Distribution Unit mounted on humidifier (SDU) or remotely installed (SDU-REM)
- Weather proof enclosure
- BACnet Network Communication System
- Ethernet (IP) option
- Stainless steel humidifier cabinet

Description of Systems

System	Description
Evaporation Chamber	Removable metallic container in which steam is produced. It is the most important part of the humidifier.
Space Distribution Unit (SDU)	Integrated steam distribution unit to humidify air when there is no duct system. Optional feature available for certain humidifier models.
Multi-Steam System	Custom made system for steam distribution. This system is designed for applications where absorption distances are very short (less than 3 feet or 900 mm).
Steam Absorption Manifold (S.A.M.)	Steam manifold adapted to air duct size. Allows steam absorption for relatively short distance applications (less than 5 feet or 1500 mm).
Steam Absorption Manifold with 2 Eyelets (S.A.M.E2)	Steam manifold with two eyelets, adapted for applications with restricted air duct dimensions. Allows steam absorption for relatively short distance applications (less than 5 feet or 1500 mm).

Visual Overview

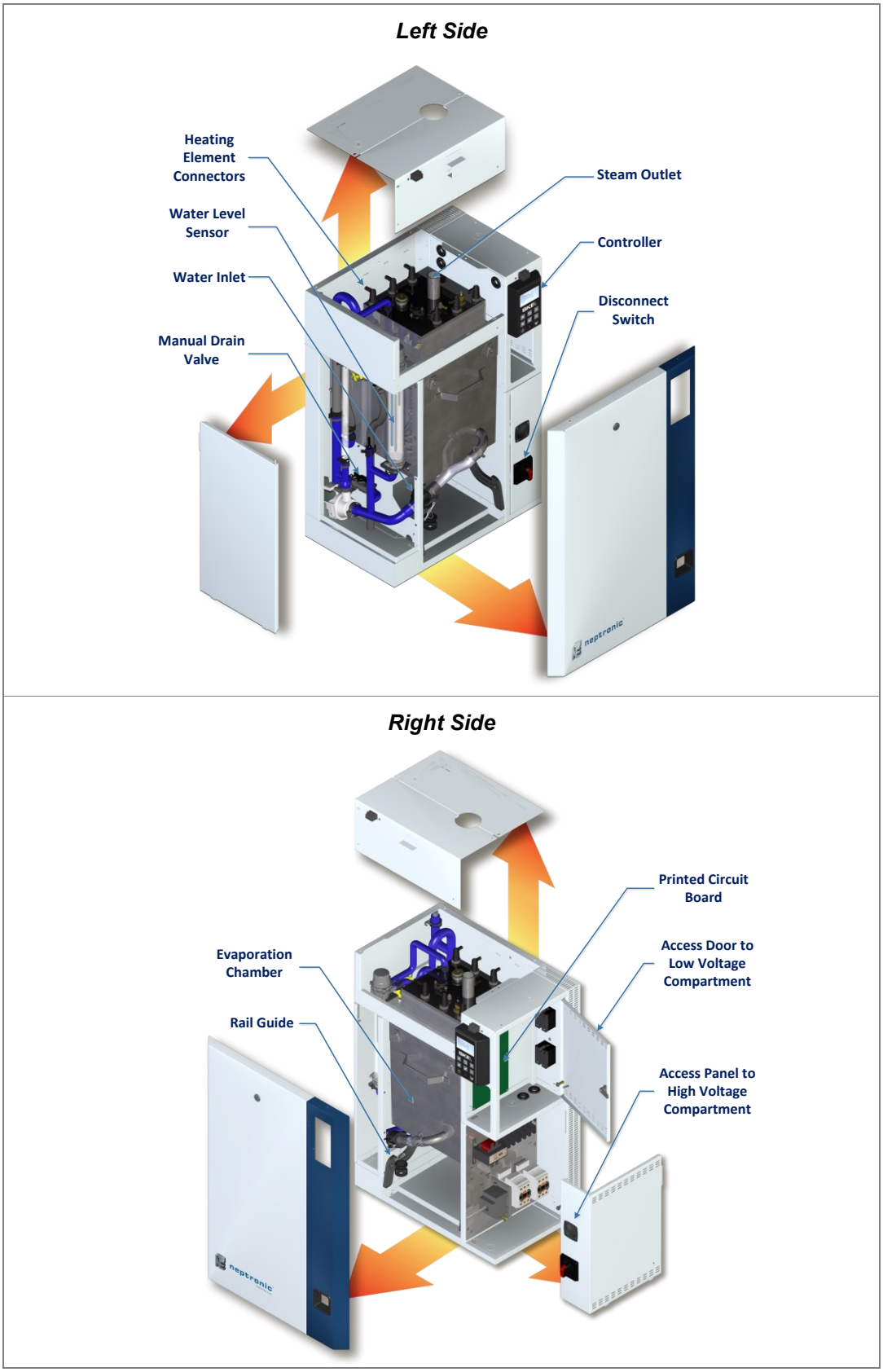

Illustration 1 - Overview of the Humidifier (SKE4-N02 to N60)

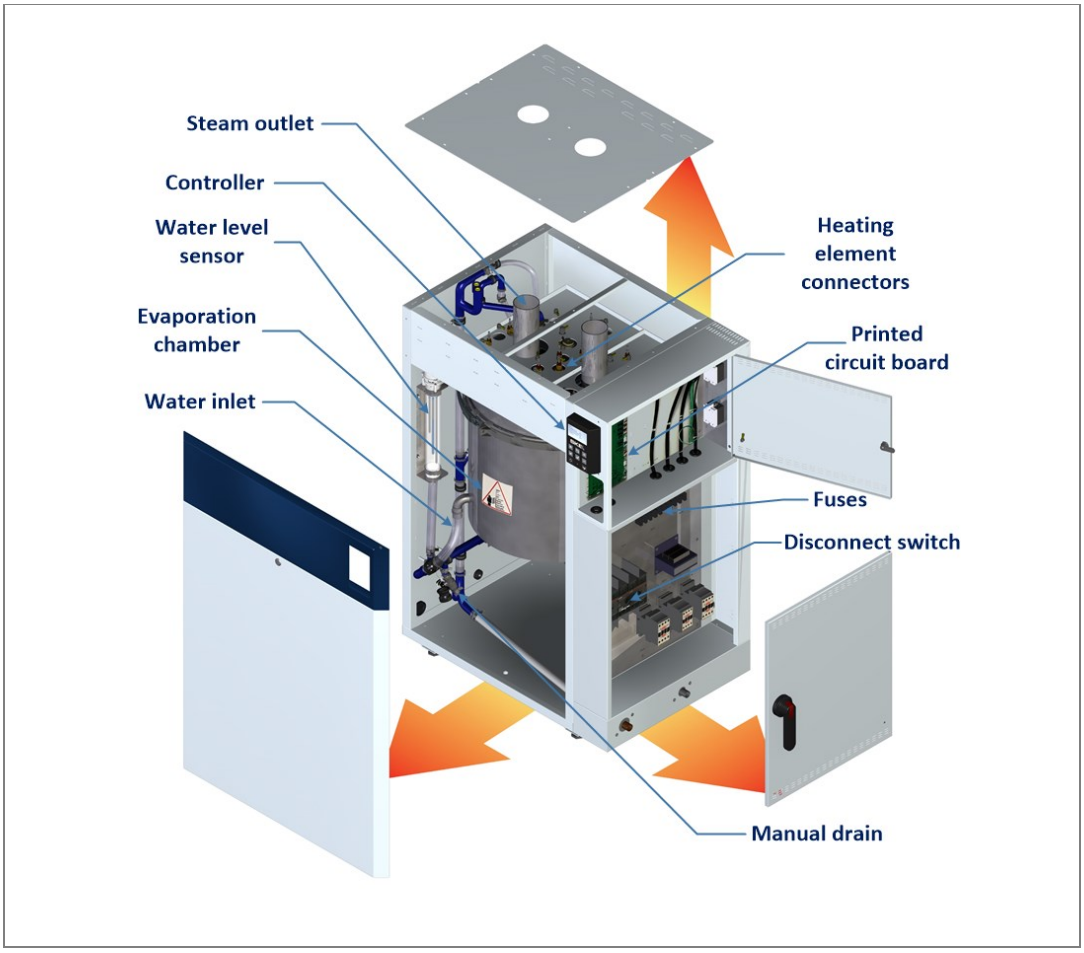

Illustration 2 - Overview of the Humidifier (SKE4-N30X to N100)

Standard Humidifier Unit

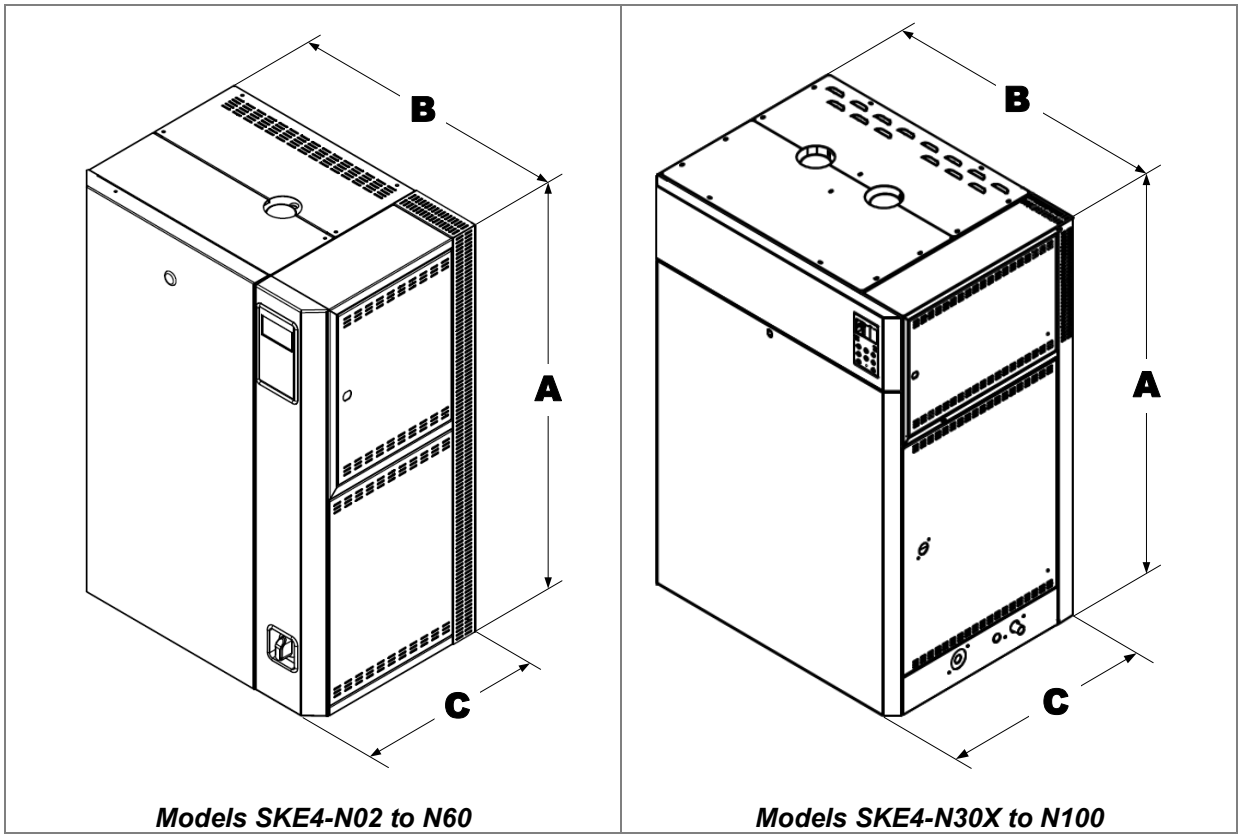

Illustration 3 - SKE4 Steam Humidifier

Dimensions and Weight

Table 1 - Dimensions and Weight

Model	Dimensions of the Cabinet (inch) [mm]			Weight (lb) [kg]	
	A	B	C	Empty	Full
SKE4-N02 SKE4-N04 SKE4-N06	23 [584]	19 ⅜ [492]	13 ⅞ [352]	65 [29]	79 [36]
SKE4-N10 SKE4-N14 SKE4-N16 SKE4-N20 SKE4-N30	32 [813]	22 ¼ [565]	15 [381]	98 [44]	143 [65]
SKE4-N20 L SKE4-N27 SKE4-N32 SKE4-N40 SKE4-N50 SKE4-N60	32 [813]	33 ¼ [845]	15 [381]	135 [61]	225 [102]
SKE4-N30 X SKE4-N40 X SKE4-N70 SKE4-N80 SKE4-N90 SKE4-N100	47 ¾ [1213]	33 [838]	24 ⅜ [619]	320 [145]	444 [200]

Humidifier with Space Distribution Unit

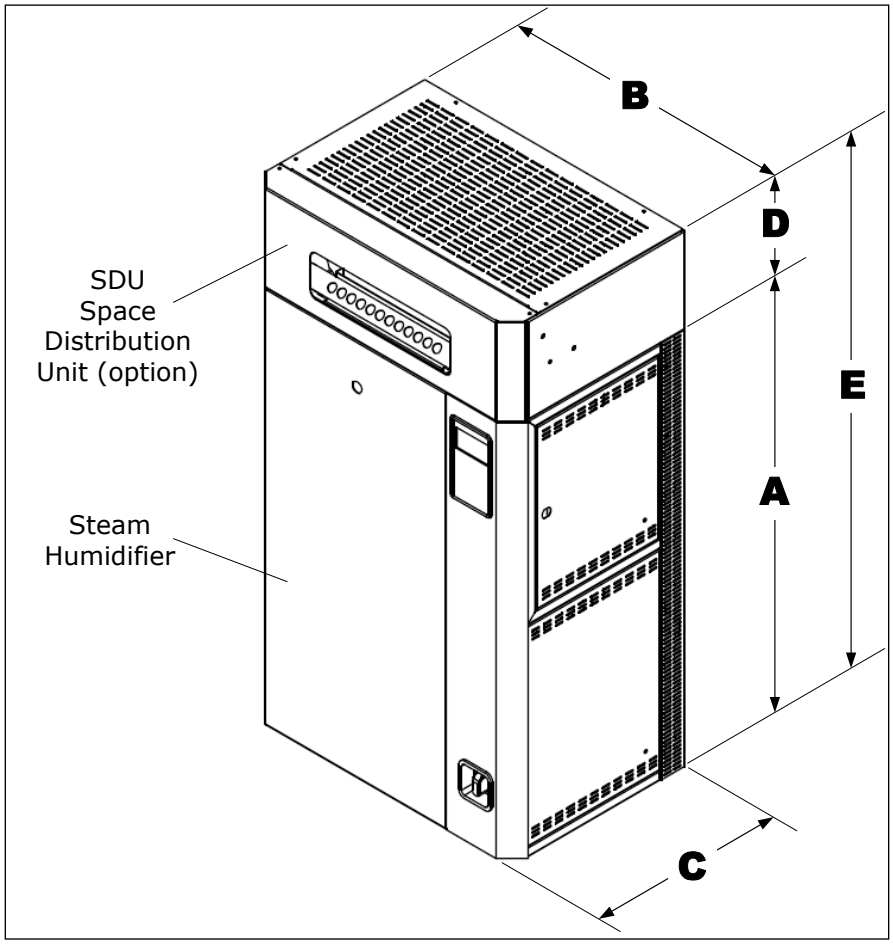

Illustration 4 - Steam Humidifier with Space Distribution Unit

Humidifier with Space Distribution Unit - Dimensions and Weight

Table 2 - Dimensions and Weight of SDU

Model	Dimensions of the Cabinet (inch) [mm]					Weight (lb) [kg]		SDU Weight (lb) [kg]
	A	B	C	D	E	Empty	Full	
SKE4-N02 SKE4-N04 SKE4-N06	23 [584]	19 ⅜ [492]	13 ⅞ [352]	7 [178]	29 ¾ [755]	80 [36]	94 [43]	**SDU4-1** 15 [7]
SKE4-N10 SKE4-N14	32 [813]	22 ¼ [565]	15 [381]	7 ¾ [197]	39 ¾ [1010]	118 [53]	163 [74]	**SDU4-2** 20 [9]
SKE4-N16 SKE4-N20 SKE4-N30	32 [813]	22 ¼ [565]	15 [381]	11 ⅜ [289]	43 ⅜ [1102]	128 [58]	173 [79]	**SDU4-3** 30 [14]

Humidifier with OSHPD Preapproval (OSP)

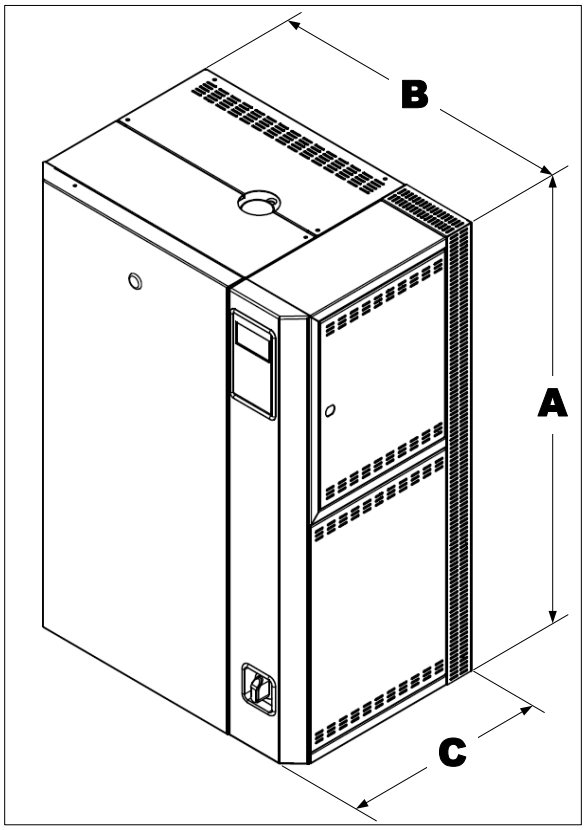

Illustration 5 - SKE4 Steam Humidifier (OSP)

Dimensions and Weight (OSP)

Table 3 - Dimensions and Weight (OSP)

Model	Dimensions of the Cabinet (inch) [mm]			Weight (lb) [kg]	
	A	B	C	Empty	Full
SKE4-N02 SKE4-N04 SKE4-N06	23 [584]	19 ⅜ [492]	14 [356]	71 [32]	85 [39]
SKE4-N10 SKE4-N14 SKE4-N16 SKE4-N20 SKE4-N30	32 [813]	22 ¼ [565]	15 ⅛ [384]	100 [45]	145 [66]
SKE4-N20 L SKE4-N40 SKE4-N50 SKE4-N60	32 [813]	33 ¼ [845]	15 ⅛ [384]	120 [54]	210 [95]

Weather Proof Enclosure

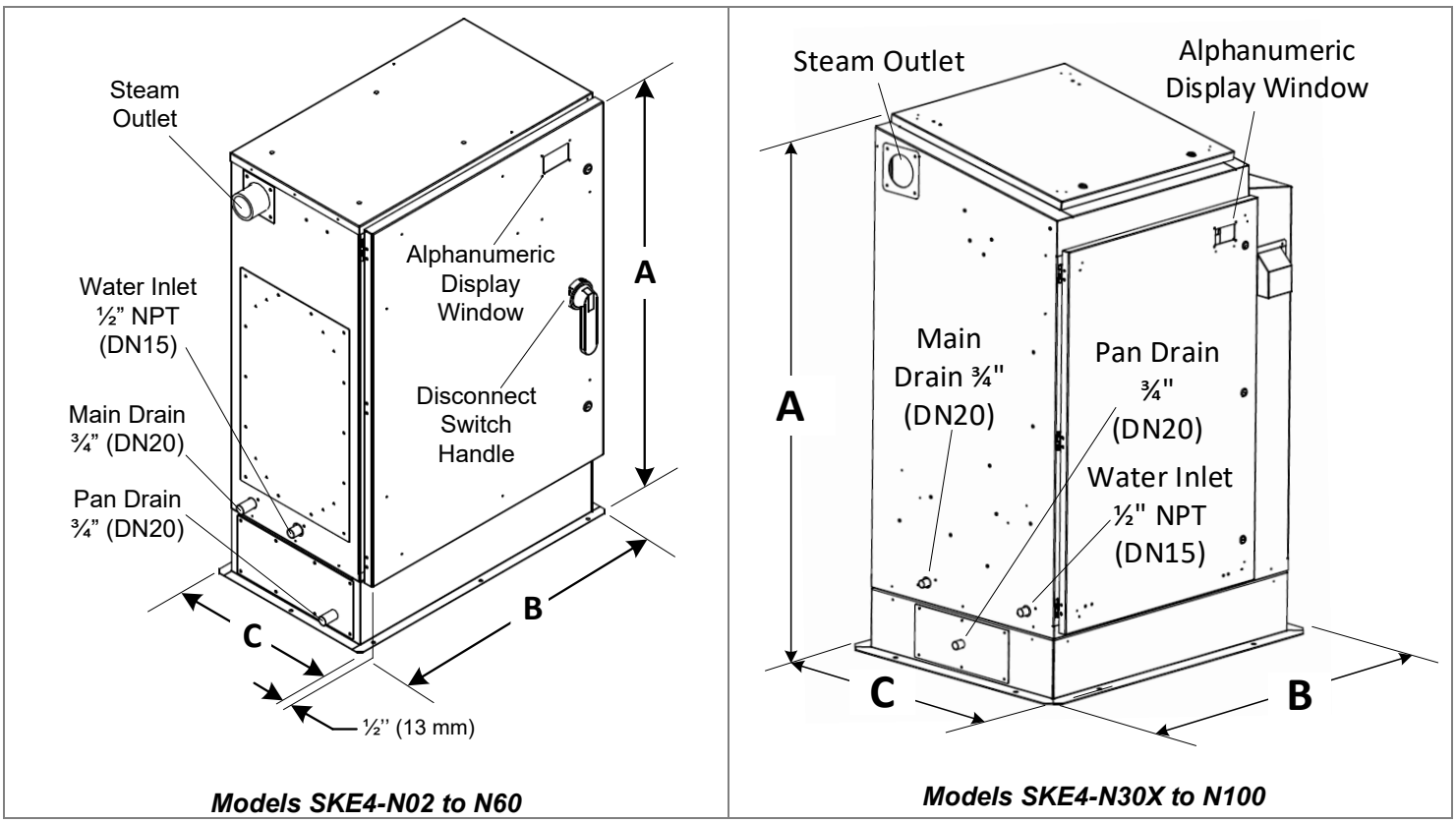

Illustration 6 - Weather Proof Enclosure

Weather Proof Enclosure - Dimensions and Weight

Table 4 - Weather Proof Enclosure: Dimensions and Weight

Model	Dimensions of the Cabinet (inch) [mm]			Weight (lb) [kg]		Steam Outlet Diameter (inch) [mm]
	A	B	C	Empty	Full	
SKE4-N02 SKE4-N04 SKE4-N06	33 ⅝ [854]	25 ⅝ [651]	16 ⅛ [410]	130 [59]	145 [66]	1 ⅜ [35]
SKE4-N10 SKE4-N14	43 ⅜ [1102]	29 ⅝ [753]	17 ¼ [438]	170 [77]	215 [98]	1 ⅜ [35]
SKE4-N16 SKE4-N20 SKE4-N30	43 ⅜ [1102]	29 ⅝ [753]	17 ¼ [438]	170 [77]	215 [98]	2 [51]
SKE4-N20 L SKE4-N27 SKE4-N32 SKE4-N40 SKE4-N50 SKE4-N60	43 ⅞ [1114]	40 ⅝ [1032]	17 ¼ [438]	232 [105]	322 [146]	3 [76]
SKE4-N30 X SKE4-N40 X SKE4-N70	60 [1524]	41.2 [1022]	31.1 [789]	420 [191]	544 [247]	3 [76]
SKE4-N80 SKE4-N90 SKE4-N100	60 [1524]	41.2 [1022]	31.1 [789]	420 [191]	544 [247]	4 [100]

Weather Proof Enclosure - OSHPD Preapproval (OSP)

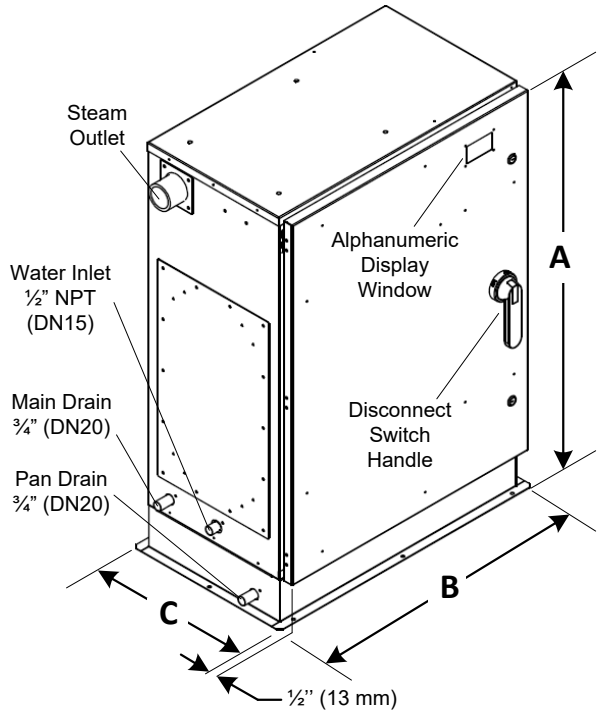

Models SKE4-N02 to N60

Illustration 7 - Weather Proof Enclosure (OSP)

Weather Proof Enclosure - Dimensions and Weight (OSP)

Table 5 - Weather Proof Enclosure: Dimensions and Weight (OSP)

Model	Dimensions of the Cabinet (inch) [mm]			Weight (lb) [kg]		Steam Outlet Diameter (inch) [mm]
	A	B	C	Empty	Full	
SKE4-N02 SKE4-N04 SKE4-N06	31.1 [790]	25.6 [652]	16.1 [409]	115 [52]	130 [59]	1 ⅜ [35]
SKE4-N10 SKE4-N14	41.1 [1044]	29.6 [753]	17.2 [437]	130 [59]	175 [80]	1 ⅜ [35]
SKE4-N16 SKE4-N20 SKE4-N30	41.1 [1044]	29.6 [753]	17.2 [437]	130 [59]	175 [80]	2 [51]
SKE4-N20 L SKE4-N40 SKE4-N50 SKE4-N60	41.1 [1044]	40.6 [1032]	17.2 [437]	195 [89]	285 [129]	3 [76]

Output and Power Consumption - Humidifier

Table 6 - Output and Power Consumption

Model	Steam Capacity (lb/hr) [kg/hr]	Consumption										Steam Output	
		Power (kW)	Amperage (A)									Qty	Diameter (inch) [mm]
			120/1	240/1	208/1	208/3	480/1	480/3	600/1	600/3			
SKE4-N02	6 [2.7]	2	17	8.5	10	-	4.5	-	3.5	-		1	1 ⅜ [35]
SKE4-N04	12 [5.5]	4	-	17	19	11.5	8.5	5	7	4		1	1 ⅜ [35]
SKE4-N06	18 [8]	6	-	26	30	16.5	13	7.2	10.5	6		1	1 ⅜ [35]
SKE4-N10	30 [14]	10	-	-	-	28	-	12	-	10		1	1 ⅜ [35]
SKE4-N14	40 [19]	13.5	-	-	-	38	-	16.5	-	13.5		1	1 ⅜ [35]
SKE4-N16	48 [21.8]	16	-	-	-	45	-	19.5	-	16		1	2 [51]
SKE4-N20	60 [28]	20	-	-	-	-	-	25	-	20		1	2 [51]
SKE4-N30	90 [41]	30	-	-	-	-	-	36	-	30		1	2 [51]
SKE4-N20 L	60 [28]	20	-	-	-	56	-	-	-	-		1	3 [76]
SKE4-N27	80 [37]	27	-	-	-	75	-	-	-	-		1	3 [76]
SKE4-N32	96 [44]	32	-	-	-	89	-	-	-	-		1	3 [76]
SKE4-N40	120 [56]	40	-	-	-	-	-	50	-	40		1	3 [76]
SKE4-N50	150 [68]	50	-	-	-	-	-	60	-	50		1	3 [76]
SKE4-N60	180 [82]	60	-	-	-	-	-	72	-	60		1	3 [76]
SKE4-N30 X	90 [41]	30	-	-	-	83.4	-	-	-	-		1	3 [76]
SKE4-N40 X	120 [56]	40	-	-	-	111	-	-	-	-		1	3 [76]
SKE4-N70	210 [95]	70	-	-	-	-	-	84	-	70		1	3 [76]
SKE4-N80	240 [108]	80	-	-	-	-	-	96	-	81		2	3 [76]
SKE4-N90	270 [122]	90	-	-	-	-	-	109	-	91		2	3 [76]
SKE4-N100	300 [136]	100	-	-	-	-	-	120	-	96		2	3 [76]

WARNING: For Modulating Humidifier, maintain the maximum power of the electrical installations according to the information in Table 6 - Output and Power Consumption.

Do not consider a possible reduction of steam output due to modulation.

Mechanical Installation

General Recommendations

WARNING: Risk of electric shock. Disconnect the appliance from electric supply before commencing installation.

Note: Mechanical installation must conform to local codes and regulations.

Location

WARNING: The SKE4 series is designed for indoor installation only.

For outdoor installation, the SKE4 must be installed using a Neptronic weather proof enclosure (see Positioning and Mounting - Weather Proof Enclosure Unit on page 26).

Failure to follow these guidelines will void the warranty.

Consider the following points before deciding the location for the SKE4 Steam Humidifier:

- Plan a location that is easy to access and permits an easy inspection and servicing of the humidifier.
- Do not install the humidifier where failure of the appliance could cause damage to the building structure or to other expensive equipment.
- Ensure that the location is well ventilated and that the ambient temperature is less than 86°F (30°C).
- Consider the total steam line length between the humidifier and the steam distributor based on the steam line material type:
    - For flexible steam hose, total steam line must not exceed 16 feet (5 meters). For longer distances, use insulated hard piping.
    - For insulated hard piping, the total steam line is determined by the humidifier capacity: one equivalent foot for each lb/hr capacity of the humidifier (0.67 m for each kg/hr), with a maximum of 50 feet (15 m). For longer steam line runs, consult factory.

Positioning

- Ensure that the front panel, the left side (plumbing compartment) and the right side (electrical compartment) are accessible in order to permit servicing.
- Leave a clearance of at least 48” (1.2 m) to the front panel and 12” (0.3 m) on the left side of the humidifier.
- Leave a clearance of at least 20” (0.5 m) on top of the humidifier.

For models SKE4-N02 to N60:

- Leave a clearance of at least 12” (0.3 m) on the right side of the humidifier.
- Mount the humidifier at a minimum height of 24” (0.6 m) above floor level.
- Leave a clearance of at least 10” (0.25 m) under the humidifier for installation of water supply, drain piping and electrical connections.

For models SKE4-N30 X to N100:

- Leave a clearance of at least 24” (0.6 m) on the right side of the humidifier.
- These models are designed to be installed directly on the floor. Adjustable legs are provided to ensure proper level.
- Provide a level, solid foundation and ensure that the floor beneath the humidifier is waterproof to withstand any water spillage during servicing or in the event of a problem.

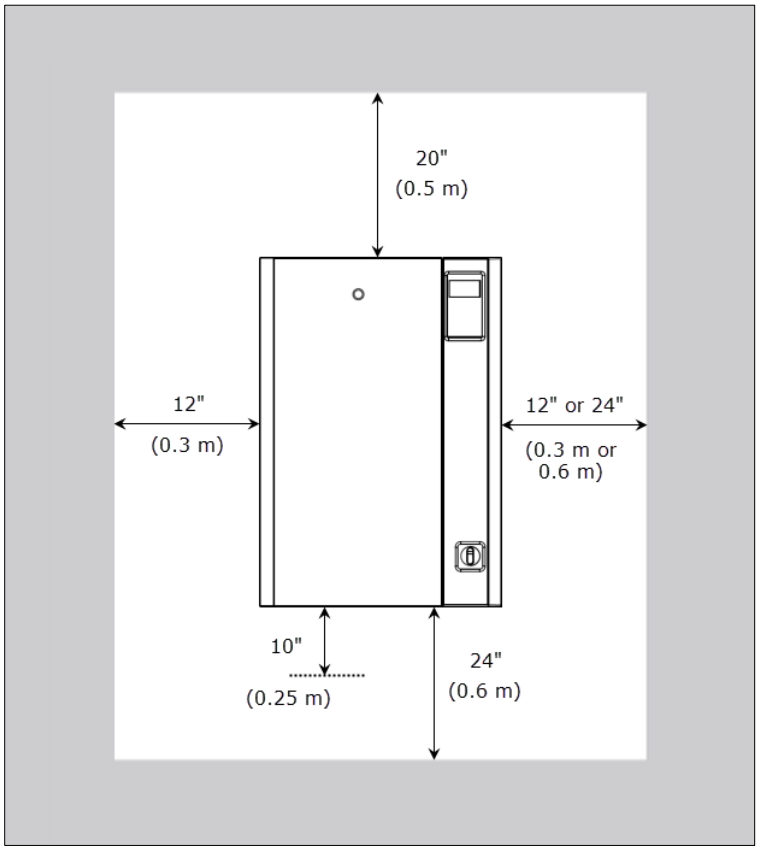

Illustration 8 - Positioning the Humidifier

Wall Mounting

CAUTION: Risk of malfunction. The humidifier must be placed at an equal level.
CAUTION: Risk of overheating. Do not block the ventilation openings located on the cabinet.

Before proceeding, check the strength of the chosen support or wall (brick, concrete, stud partition wall) on which the humidifier will be mounted. See the Dimensions and Weight section (page 8) to know the weight of the unit.

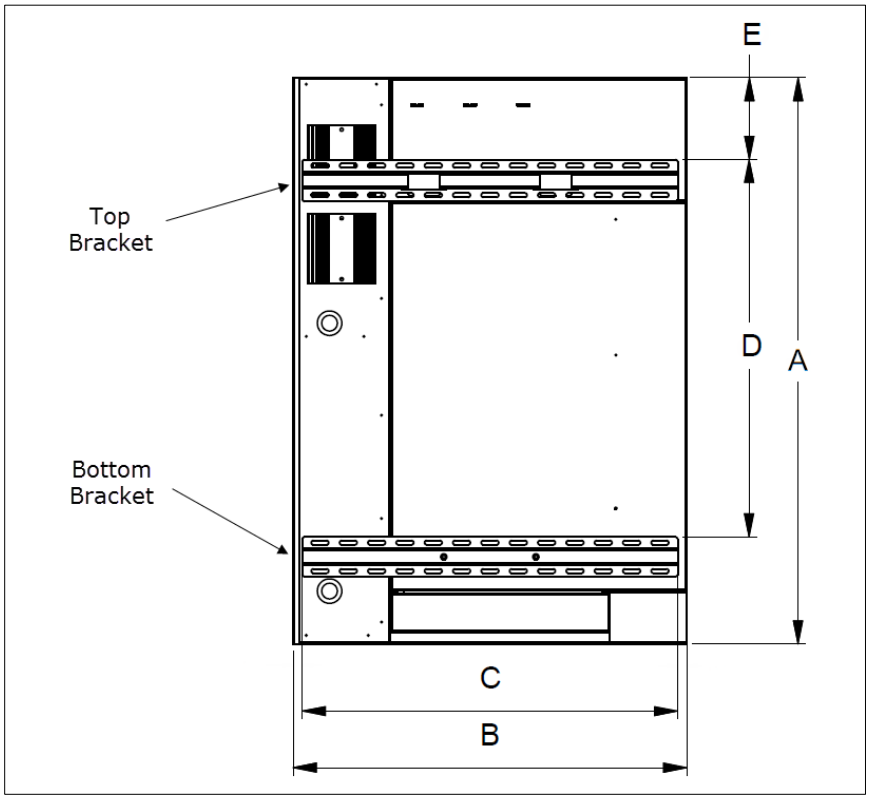

Illustration 9 - Mounting Bracket Positioning

Table 7 - Positioning Lines of Mounting Brackets

Model	Dimensions (inch) [mm]				
	A	B	C	D	E
SKE4-N02 SKE4-N04 SKE4-N06	23 [584]	19 ⅜ [492]	18 ⅜ [467]	18 ⅜ [467]	7/8 [22]
SKE4-N10 SKE4-N14 SKE4-N16 SKE4-N20 SKE4-N30	32 [813]	22 ¼ [565]	21 ¼ [540]	21 ¼ [540]	7/8 [22]
SKE4-N20 L SKE4-N27 SKE4-N32 SKE4-N40 SKE4-N50 SKE4-N60	32 [813]	33 ¼ [845]	28 ¼ [718]	21 ¼ [540]	7/8 [22]

Note: Models SKE4-N30X to N100 cannot be wall mounted and must be properly secured to the ground using the adjustable legs.

To wall mount the humidifier, perform the following steps:

1. Place the top bracket (supplied) on the support or wall as per the dimensions specified in Table 7 - Positioning Lines of Mounting Brackets.
2. Drill 4 screws 1/4” (6mm) (not supplied) into the slotted holes of the top bracket, to secure the bracket to the support or wall.
3. Place the bottom bracket (supplied) on the support or wall as per the dimensions specified in Table 7 - Positioning Lines of Mounting Brackets.
4. Drill 4 screws 1/4” (6mm) (not supplied) into the slotted holes of the bottom bracket, to secure the bracket to the support or wall.

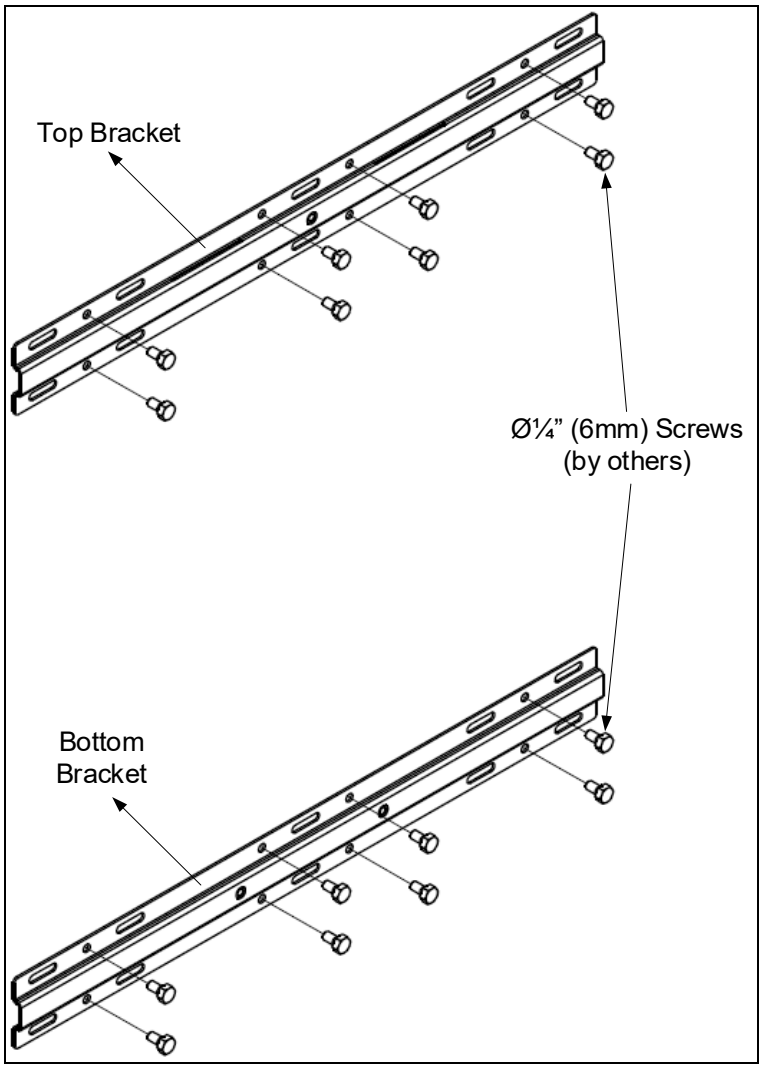

Illustration 10 - Mounting Bracket Attachment

5. Secure the humidifier to the top bracket, by placing the back inserts into the open slots located on the edge of the center of the top bracket.

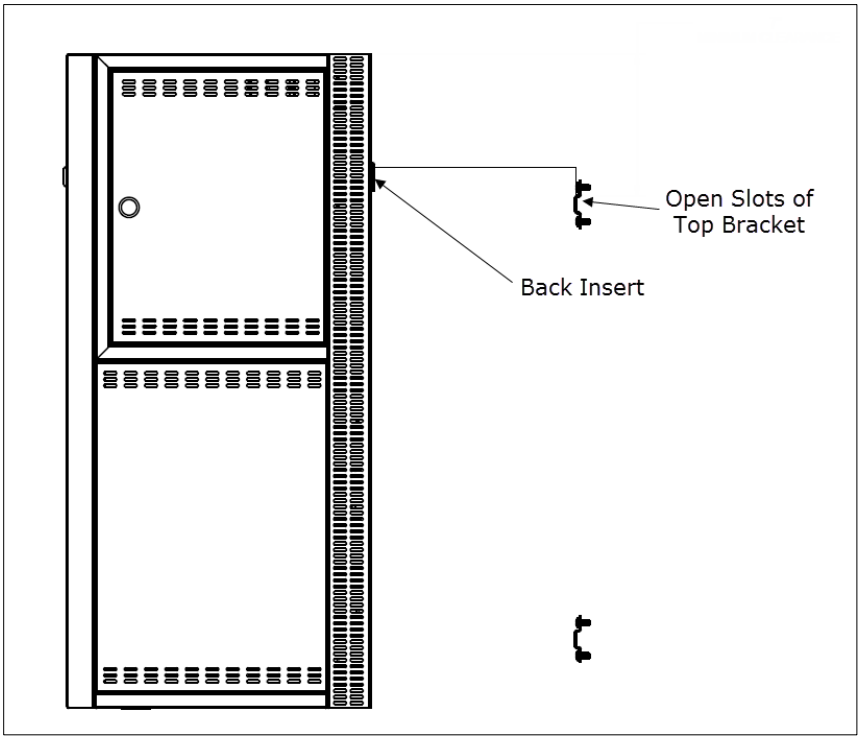

Illustration 11 - Top Mounting Bracket Connection

6. Open the front door of the humidifier to gain access to the slotted holes located in the back of the cabinet. Verify that the holes are aligned with the ones located in the center of the bottom bracket.
7. From inside the humidifier, drill 2 **(models SKE4-N02 to N30)** or 4 **(models SKE4-N20L to N60)** screws (supplied) into the center of the bottom bracket, to secure the humidifier to the support or wall.

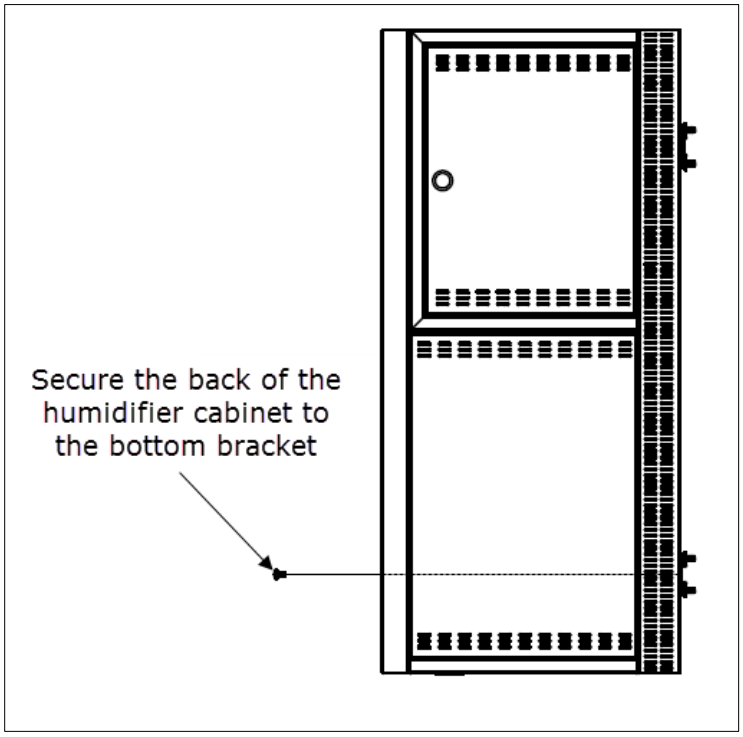

Illustration 12 - Bottom Mounting Bracket Connection

Wall Mounting - Humidifier with OSHPD Preapproval (OSP)

CAUTION: Risk of malfunction. The humidifier must be placed at an equal level.

CAUTION: Risk of overheating. Do not block the ventilation openings located on the cabinet.

Before proceeding, check the strength of the chosen support or wall (brick, concrete, stud partition wall) on which the humidifier will be mounted. See the Dimensions and Weight section (page 8) to know the weight of the unit.

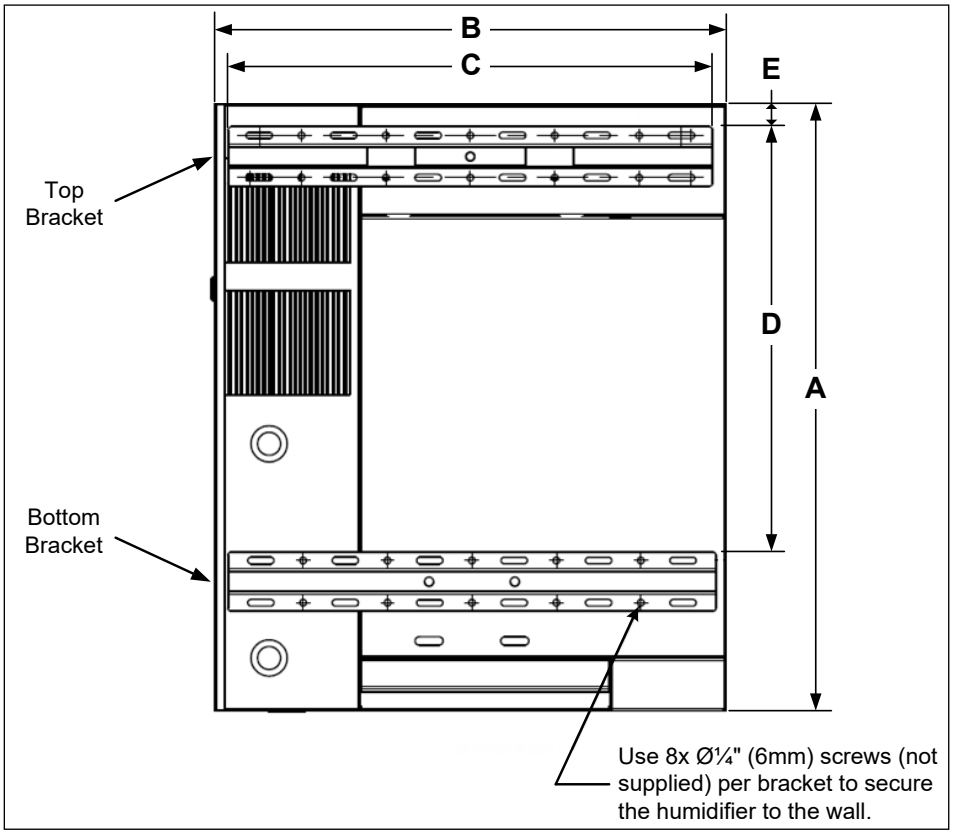

Illustration 13 - OSHPD Humidifier Mounting Bracket Positioning

Table 8 - OSHPD Humidifier Positioning Lines of Mounting Brackets

Model	Dimensions (inch) [mm]				
	A	B	C	D	E
SKE4-N02 SKE4-N04 SKE4-N06	23 [584]	19 ⅜ [492]	18 ⅜ [467]	16 ⅛ [410]	7/8 [22]
SKE4-N10 SKE4-N14 SKE4-N16 SKE4-N20 SKE4-N30	32 [813]	22 ¼ [565]	21 ¼ [540]	20 ¼ [514]	7/8 [22]
SKE4-N20 L SKE4-N40 SKE4-N50 SKE4-N60	32 [813]	33 ¼ [845]	28 ¼ [718]	20 ¼ [514]	7/8 [22]

Note: Models SKE4-N30X to N100 cannot be wall mounted and must be properly secured to the ground using the adjustable legs.

To wall mount the humidifier, perform the following steps:

1. Place the top bracket (supplied) on the support or wall as per the dimensions specified in Table 8 - OSHPD Humidifier Positioning Lines of Mounting Brackets.
2. Drill 8 screws of ¼" (6mm) diameter (not supplied) into the circular holes of the top bracket, to secure the bracket to the support or wall.
3. Place the bottom bracket (supplied) on the support or wall as per the dimensions specified in Table 8 - OSHPD Humidifier Positioning Lines of Mounting Brackets.
4. Drill 8 screws of ¼" (6mm) diameter (not supplied) into the circular holes of the bottom bracket, to secure the bracket to the support or wall.

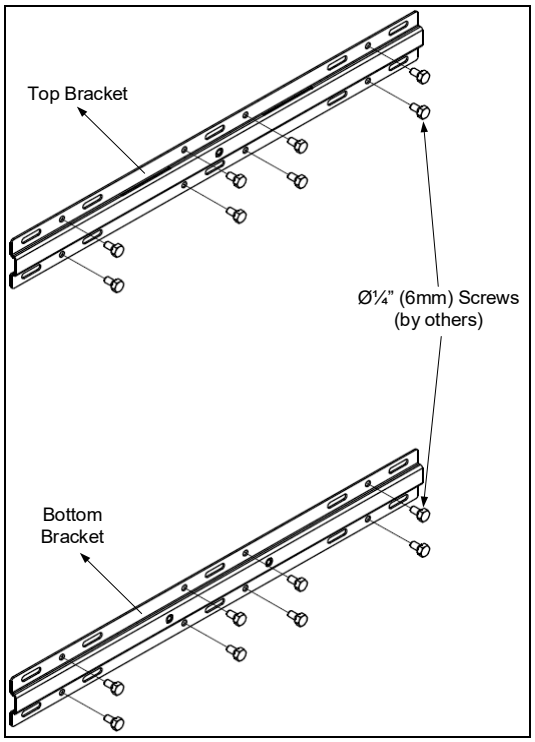

Illustration 14 - OSHPD Mounting Bracket Attachment

5. Secure the humidifier to the top bracket, by placing the back inserts into the open slots located on the edge of the center of the top bracket.

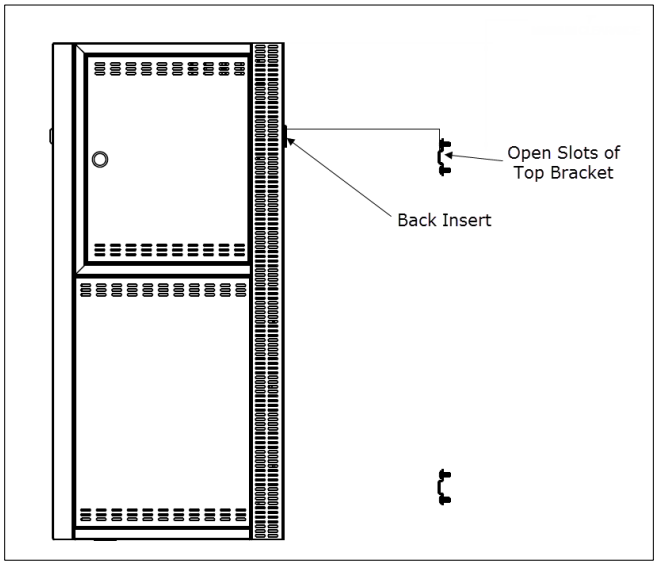

Illustration 15 - OSHPD Top Mounting Bracket Insertion

6. Open the front door of the humidifier to gain access to the circular holes located in the back of the cabinet, above the slotted holes. Verify that the holes are aligned with the ones located in the center of the bottom bracket.
7. From inside the humidifier, drill 2 **(models SKE4-N02 to N30)** or 4 **(models SKE4-N20L to N60)** screws (supplied) into the center of the bottom bracket.

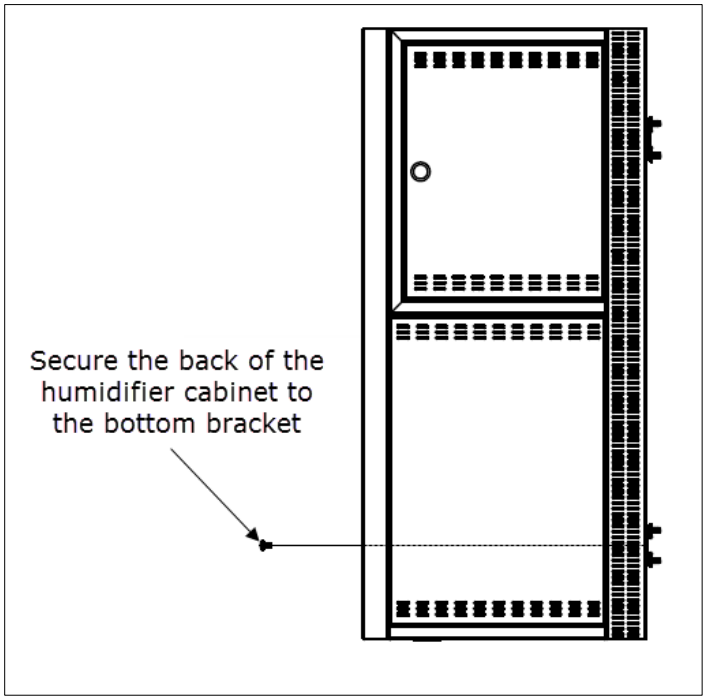

Illustration 16 - OSHPD Bottom Mounting Bracket Connection

8. Remove the top panel to gain access to the circular hole(s) aligned with the center hole(s) of the top bracket. From on top of the humidifier, drill 1 **(models SKE4-N02 to N30)** or 2 **(models SKE4-N20L to N60)** screws (supplied) into the center of the top bracket, in order to secure the humidifier to the support or wall.

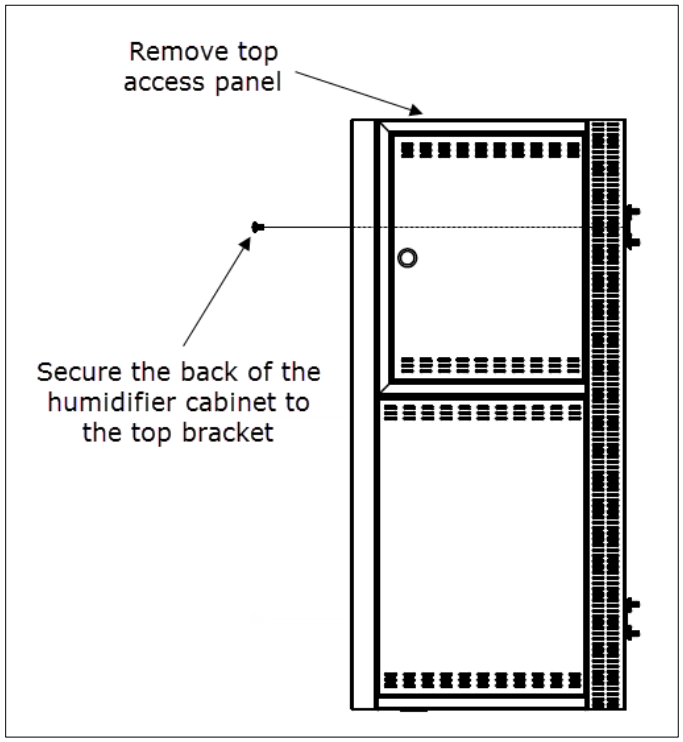

Illustration 17 - OSHPD Top Mounting Bracket Connection

Positioning - Humidifier with SDU

- The SDU must be installed in an environment where the air is relatively clean. This will prevent the blower from getting clogged with dust.
- The humidifier must be mounted with minimum clearances to avoid condensation on the ceiling, wall, and other components. *Note: The recommended distances were tested at 40% R.H at 73°F (23°C). Adjust the distance according to your settings.*
- If additional ventilation is not present, ensure that the fan has a clearance of at least 54" (1.35 m) from the ceiling. Proper ventilation must be observed to avoid ceiling and wall condensation.

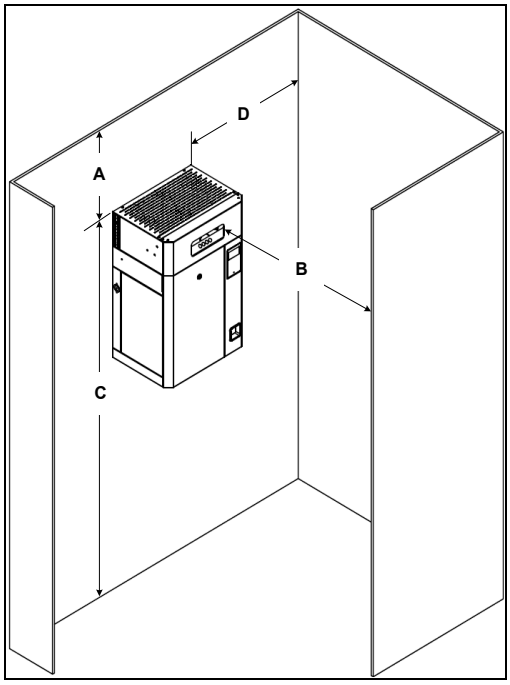

Illustration 18 - SDU Mounted on Humidifier

Absorption Distance of the SDU4

Table 9 - SDU4 Absorption Distance

Humidifier Model	Dimensions (inch) [mm]				
	SDU Model	A	B	C	D
SKE4-N02 (6 lb/h)	SDU4-1	18 [457] *	21 [533]	78 [1981]	18 [457]
SKE4-N04 (12 lb/h)			48 [1219]		
SKE4-N06 (18 lb/h)			78 [1981]		
SKE4-N10 (30 lb/h)	SDU4-2		126 [3200]		
SKE4-N14 (40 lb/h)			144 [3658]		
SKE4-N16 (48 lb/h)	SDU4-3		96 [2438]		
SKE4-N20 (60 lb/h)			114 [2896]		
SKE4-N30 (90 lb/h)			156 [3962]		

**Note: Without additional ventilation, the dimension "A" will need to be at least 54" (1.35 m) from the ceiling.*

Maintenance of the SDU

Clean the blower if there is an accumulation of dust.

Remote Installation - Humidifier with SDU

The SDU can be installed in a different location than the humidifier (remote SDU). Follow the piping recommendations.

- Mount the SDU to the wall on brackets (supplied). Do not drill mounting holes through the cabinet of the SDU.
- Connect the steam hose to the bottom inlet of the SDU and to the humidifier steam outlet located on top of the cabinet.
- Secure the steam hose with the hose clamp (supplied).
- Connect the condensate hose to the bottom of the SDU and to an open drain or to the humidifier using the knockout hole located on the back of the cabinet.
- Connect the electrical wires from the SDU to the top of the humidifier. Field wiring must conform to local codes.
- The fan of the SDU will operate for a period of five minutes after steam production has stopped to prevent condensation.
- Avoid any obstruction of the ventilation openings on top of the SDU.

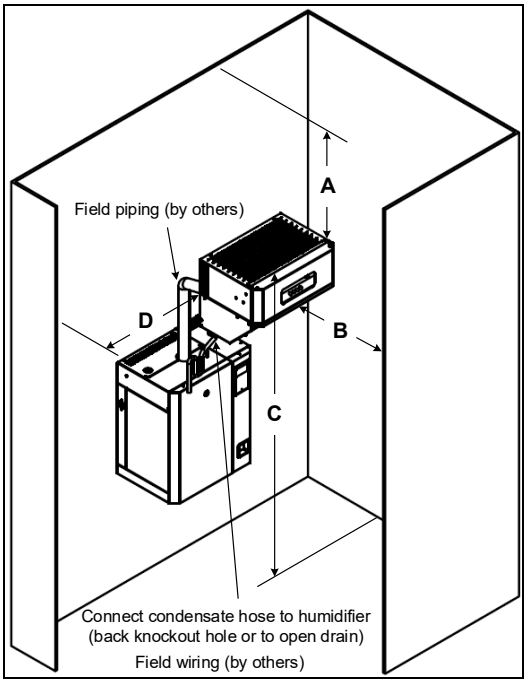

Illustration 19 - SDU Remote Installation

Table 10 - SDU4 Absorption Distance

Humidifier Model	Dimensions (inch) [mm]				
	SDU Model	A	B	C	D
SKE4-N02 (6 lb/h)	SDU4-1	18 [457] *	21 [533]	78 [1981]	18 [457]
SKE4-N04 (12 lb/h)			48 [1219]		
SKE4-N06 (18 lb/h)			78 [1981]		
SKE4-N10 (30 lb/h)	SDU4-2		126 [3200]		
SKE4-N14 (40 lb/h)			144 [3658]		
SKE4-N16 (48 lb/h)	SDU4-3		96 [2438]		
SKE4-N20 (60 lb/h)			114 [2896]		
SKE4-N30 (90 lb/h)			156 [3962]		

**Note: Without additional ventilation, the dimension "A" will need to be at least 54" (1.35 m) from the ceiling.*

Wall Mounting the Remote SDU

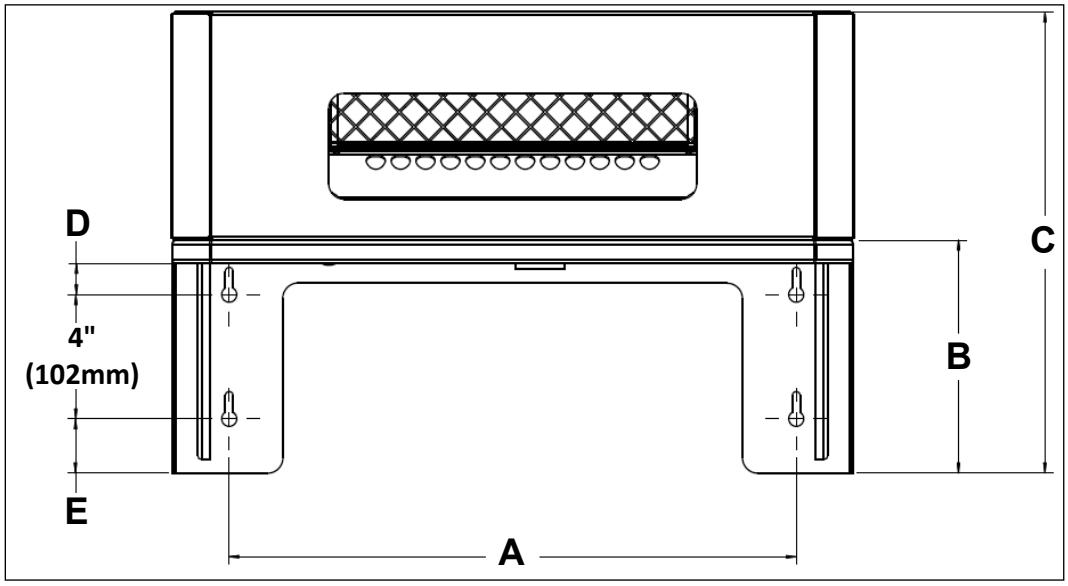

Illustration 20 - Remote SDU Mounting Bracket

Table 11 - Remote SDU Mounting Bracket Dimensions

Model	SDU	Dimensions (inch) [mm]				
		A	B	C	D	E
SKE4-N02 SKE4-N04 SKE4-N06	SDU4-1	16 [406]	6 ¾ [171]	13.7 [348]	¾ [19]	1 ⅛ [29]
SKE4-N10 SKE4-N14	SDU4-2	18 ½ [470]	7 ½ [191]	14.9 [377]	1 [25]	1 ¾ [45]
SKE4-N16 SKE4-N20 SKE4-N30	SDU4-3	18 ½ [470]	7 ½ [191]	18.9 [480]	1 [25]	1 ¾ [45]

Remote SDU Cover Installation (Option)

Perform the following steps to install the optional remote SDU cover:

1) Secure the two side covers onto the remote SDU mounting bracket by fastening them with 3x 6-32 (M3.5 x 0.6) nuts (supplied).
2) Secure the front cover onto the remote SDU mounting bracket by fastening it with 6x 8-32 (M4 x 0.7) screws (supplied).

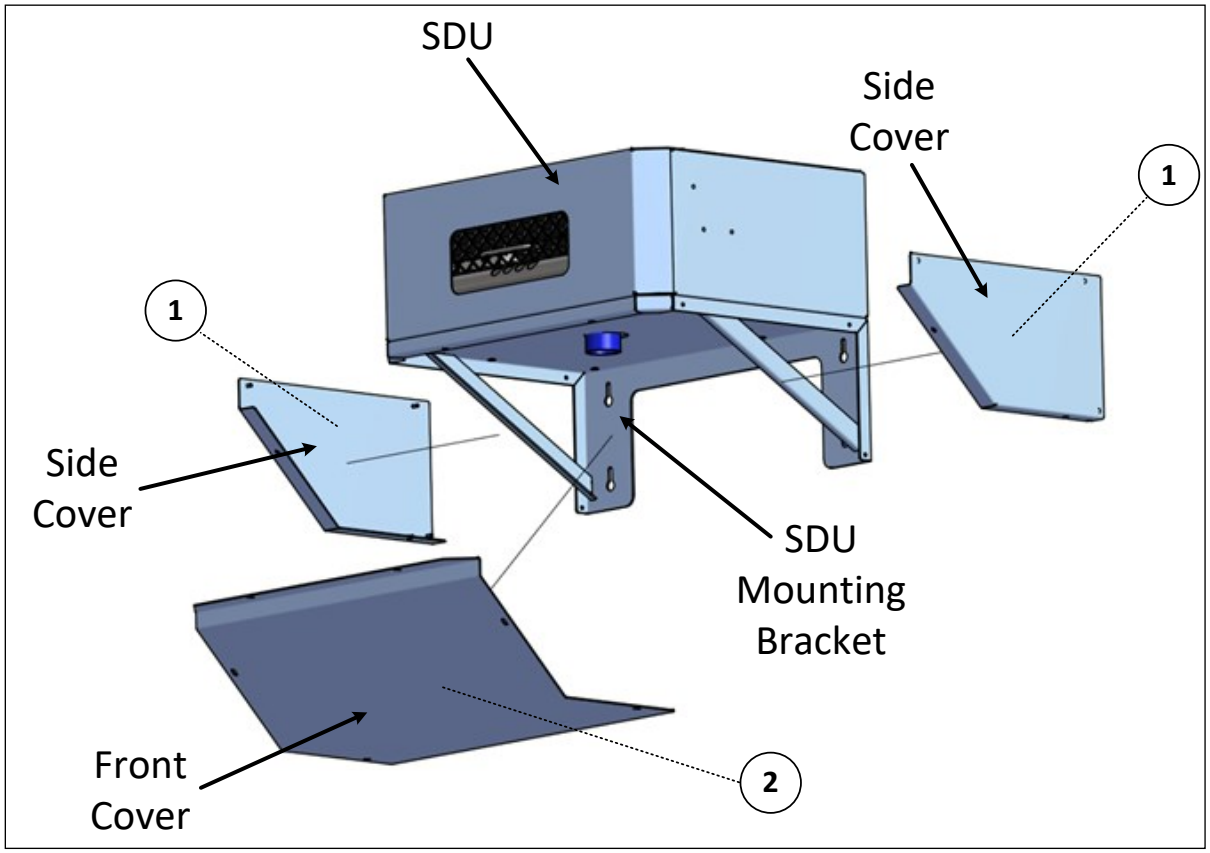

Illustration 21 - Remote SDU Cover Installation

Positioning and Mounting - Weather Proof Enclosure Unit

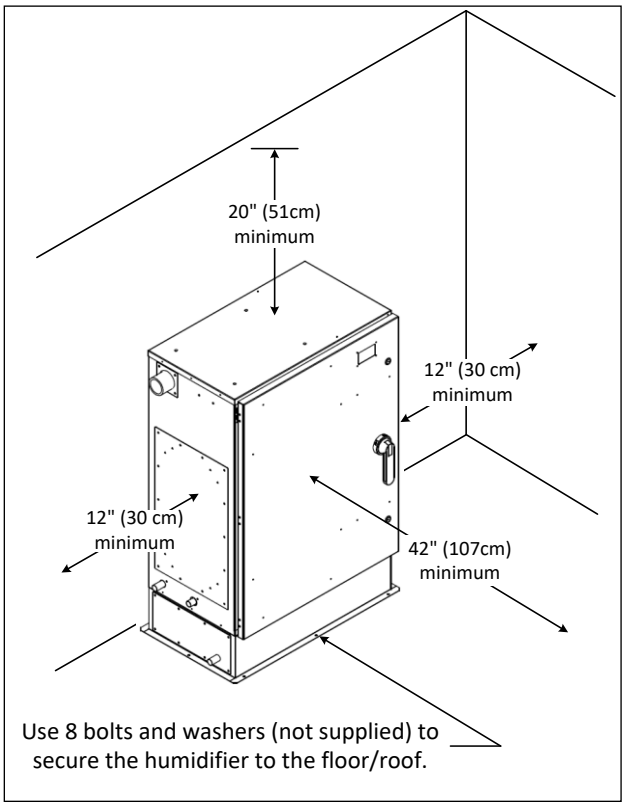

Illustration 22 - Weather Proof Enclosure Positioning

General Recommendations

- Plan a location that is easy to access and permits an easy inspection and servicing of the humidifier.
- Ensure that the humidifier is installed in a location in which the outside temperature lies between -40°F [-40°C] and 122°F [50°C].
- Do not install the humidifier where failure of the appliance could cause damage to the building structure or to other expensive equipment.
- Maintain the following minimum clearances while installing to enable access for inspection and servicing.

Side	Minimum Clearance
Top	20” (51 cm)
Both sides	12” (30 cm)
Front	42” (107 cm)

- The humidifier is designed to be installed directly on the floor/roof or a curb.
- Provide a level, solid foundation for the humidifier.
- Ensure that the floor/roof beneath the humidifier is water proof to withstand any water spillage during servicing or if a problem occurs.
- Attach the SKE4 enclosure securely and safely, by securing the base plate to the ground with the use of 8 bolts and washers (not supplied), as per the sizes indicated in the following table.

Model	Bolt Diameter
SKE4-N02 to SKE4-N60	5/16" (8mm)
SKE4-N30X to SKE4-N100	½" (12mm)

Model (OSP)	Bolt Diameter
SKE4-N02 to SKE4-N60	(8) 1/4" grade 5 bolts
SKE4-N30X, N40X, N70 to N100	(8) 3/8" grade 5 bolts

Steam Dispersion System

Steam Dispersion System Selection

To prevent the accumulation of condensation in air ducts, Neptronic has designed four basic configurations of steam distribution systems to provide the most economical solution for any particular application.

Steam Absorption Manifold (S.A.M.) Horizontal Duct

The S.A.M. system is suitable for installations where absorption distances are short, less than 5 feet (1500 mm), and/or low duct temperatures are in effect.

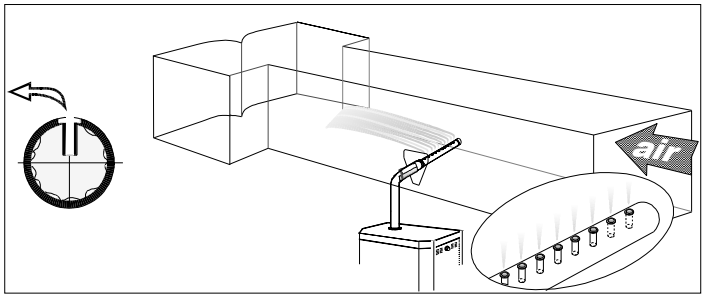

Illustration 23 - Steam Absorption Manifold (S.A.M) Horizontal Duct

Steam Absorption Manifold (S.A.M.E2) Horizontal Duct

The S.A.M.E2 system is suitable for installations where absorption distances are short, less than 5 feet (1500 mm), and/or low duct temperatures are in effect. S.A.M.E2 are used in applications with restricted duct dimensions.

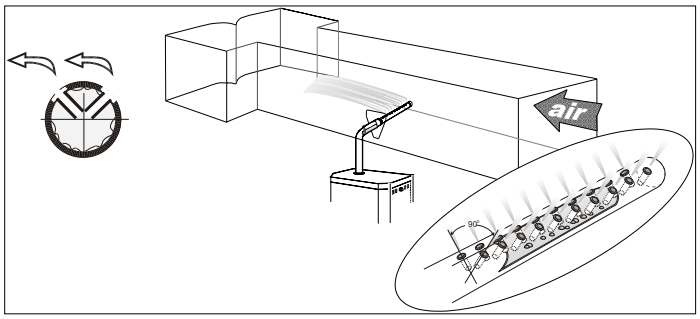

Illustration 24 - Steam Absorption Manifold (S.A.M.E2) Horizontal Duct

Steam Absorption Manifold (S.A.M. or S.A.M.E2) Vertical Duct

S.A.M. or S.A.M.E2 systems for vertical ducts are used when the absorption distances are normal and the requirement is for an economical and efficient solution.

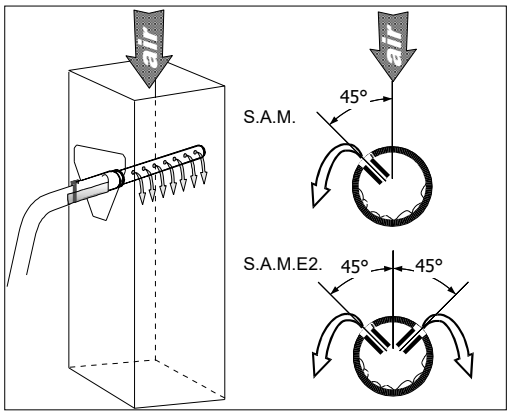

Illustration 25 - Steam Absorption Manifold (S.A.M. or S.A.M.E2) Vertical Duct

Multi-Steam System

The Multi-Steam system is used in critical locations in air handling systems, particularly where absorption distances are very short, less than 3 feet (900 mm), or where low air duct temperatures are present. The Multi-Steam is custom made to the dimensions of the duct or AHU.

Instructions to install the Multi-Steam system are described in a specific installation instructions manual enclosed with the Multi-Steam system.

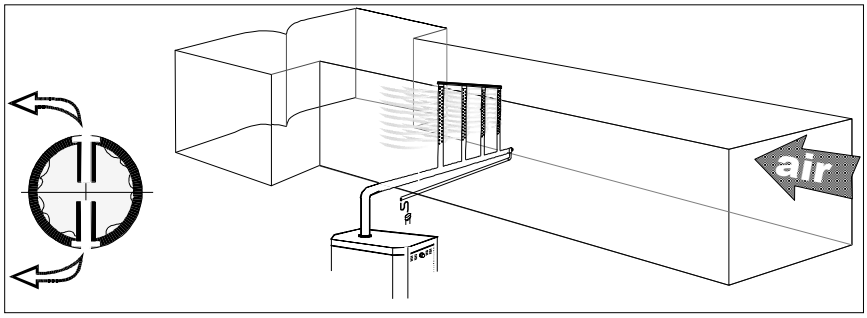

Illustration 26 - Multi Steam System

Positioning S.A.M. and S.A.M.E2

Duct Mounting

The steam manifold must be mounted and secured through the side of the air handling unit or duct. Ensure that provisions are made for safe accessibility, ideally with an observation light and window. Ensure that the construction of the duct wall is suitable enough to support the steam pipe for the duration of the installation life.

The dimension of the hole size in the duct must be as follows:

Steam Manifold Ø	Hole Size ØA
1 ⅜" (35 mm)	2" (51 mm)
2" (51 mm)	3" (76 mm)

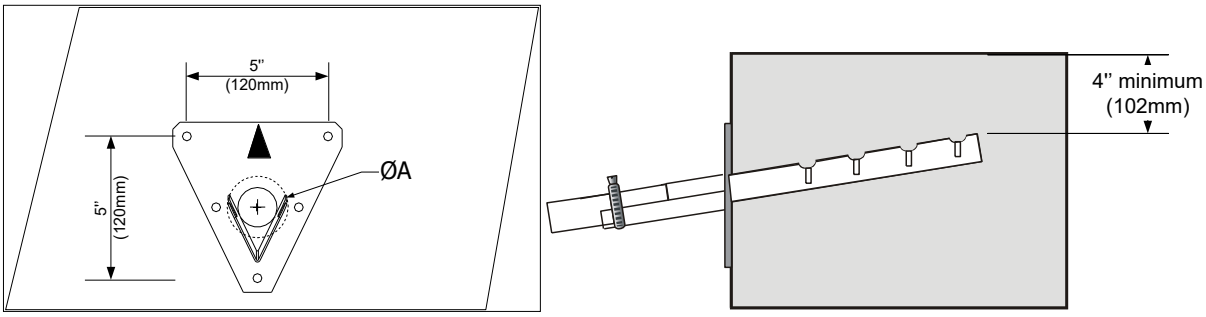

Illustration 27 - Duct Hole Dimensions and Minimum Distance

WARNING: Risk of condensation. Ensure that the minimum distance at the end of the manifold is at least 4" (102 mm) from the top of the duct.

Recommendation for S.A.M. Distribution Pipes

Table 12 - Recommendation for S.A.M. Distribution Pipes

Model	Max Capacity		Distribution Pipes				Max Static Pressure	
	lb/hr	kg/hr	Qty		Diameter (in) [mm]		in. of water	Pa
SKE4-N02	6	2.7	1		1 ⅜ [35]		5	1245
SKE4-N04	12	5.5						
SKE4-N06	18	8						
SKE4-N10	30	14						
SKE4-N14	40	19						
SKE4-N16	48	22	1	2	2 [51]	1 ⅜ [35]		
SKE4-N20	60	28						
SKE4-N30	90	41						
SKE4-N20 L	60	28	2		2 [51]			
SKE4-N27	80	37						
SKE4-N32	96	44						
SKE4-N40	120	56						
SKE4-N50	150	68	3					
SKE4-N60	180	82						

For higher static pressure, contact the manufacturer.

Note: A steam header having an inlet of 3" (76 mm) and two or three outlets of 2" (51 mm) is required when using S.A.M. steam manifolds for models SKE4-N20L to N60 (purchased seperately).

Placement of Steam Pipe in Horizontal Duct

1 ⅜'' (35mm) Diameter Pipe

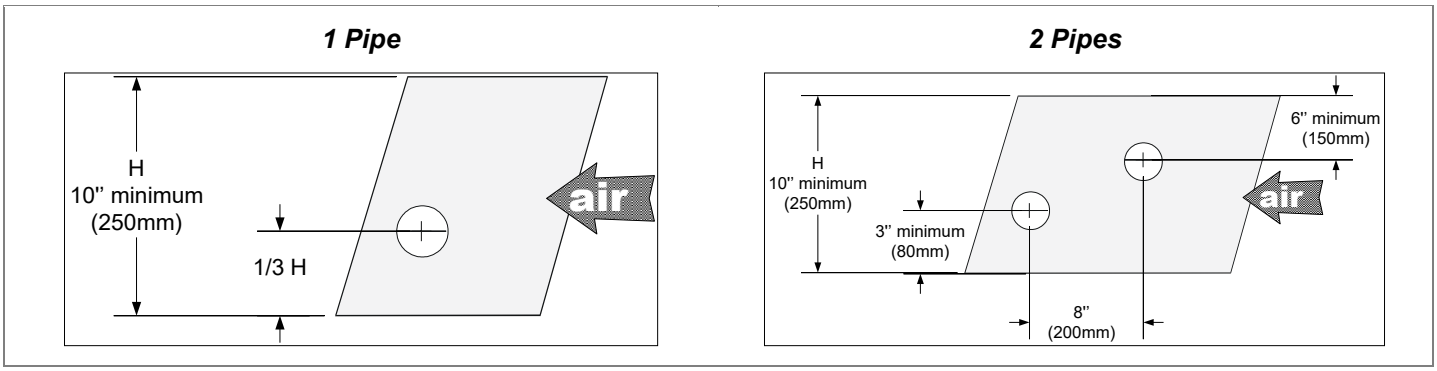

Illustration 28 - 1 ⅜'' (35 mm) Diameter Pipe Placement: Horizontal Duct

2'' (51mm) Diameter Pipe

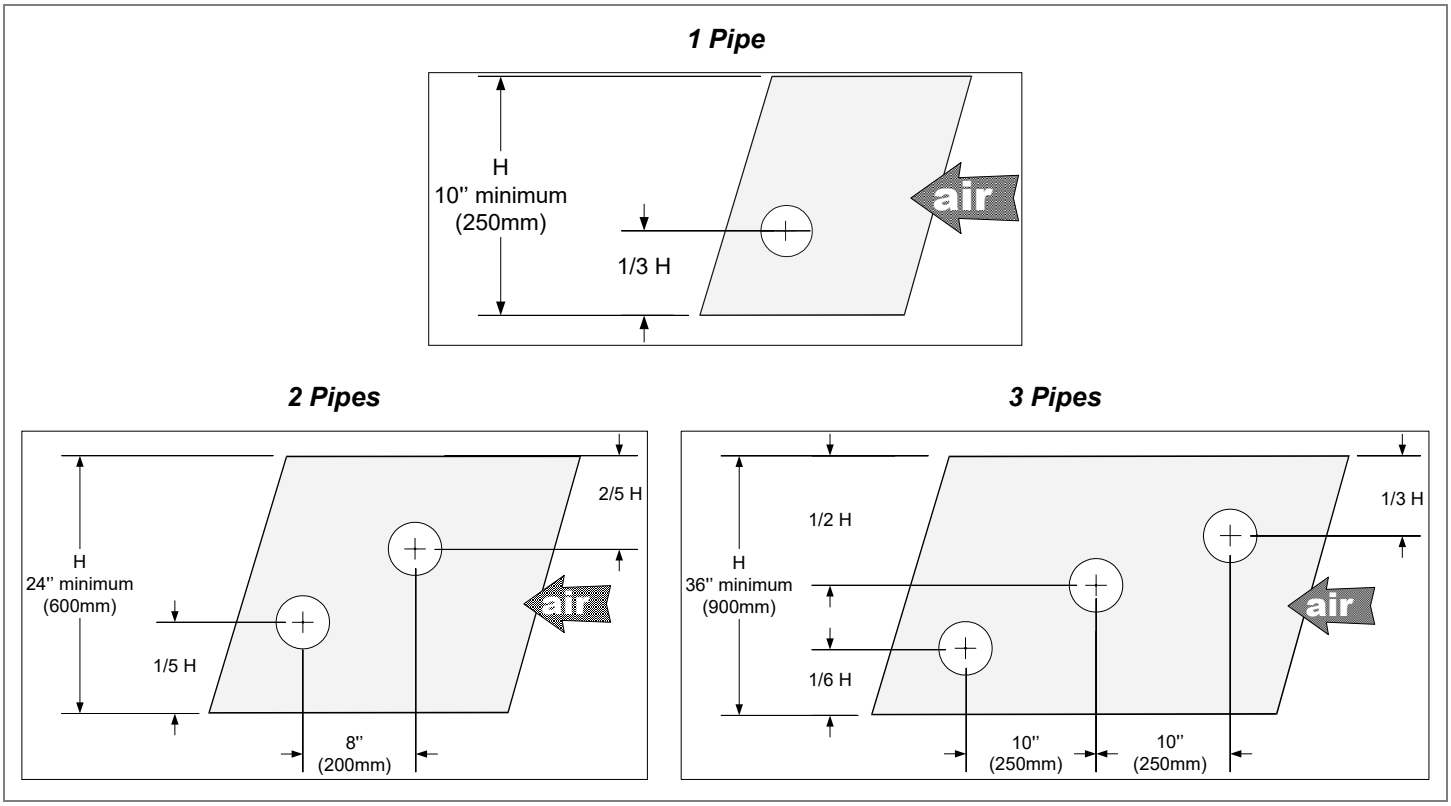

Illustration 29 – 2" (51 mm) Diameter Pipe Placement: Horizontal Duct

Note: 2" (51 mm) steam pipe must be supported on the end by appropriate duct hanger or strap (supplied by others).

Placement of Steam Pipe in Vertical Duct

Eyelet Orientation

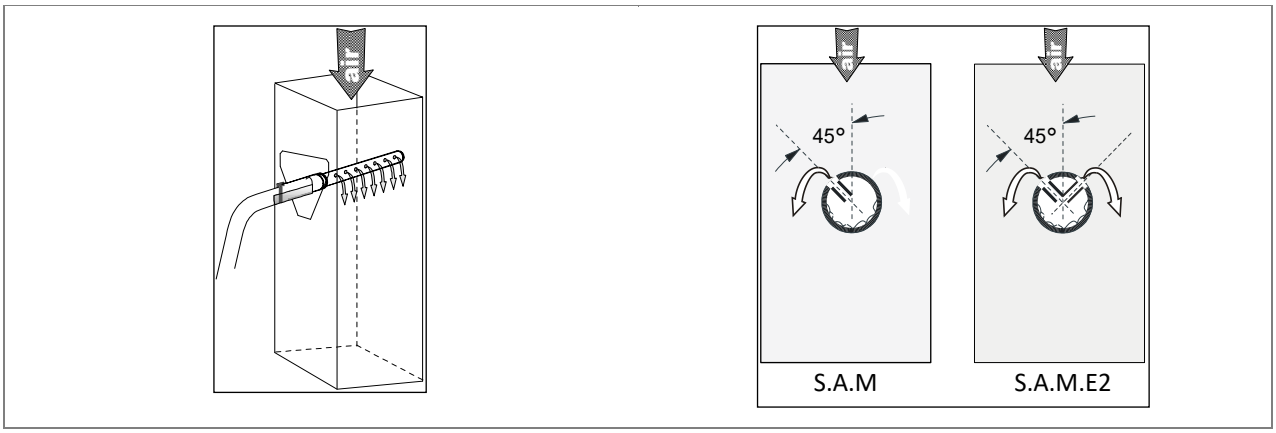

Illustration 30 - Eyelet Orientation

1 ⅜" (35 mm) Diameter Pipe

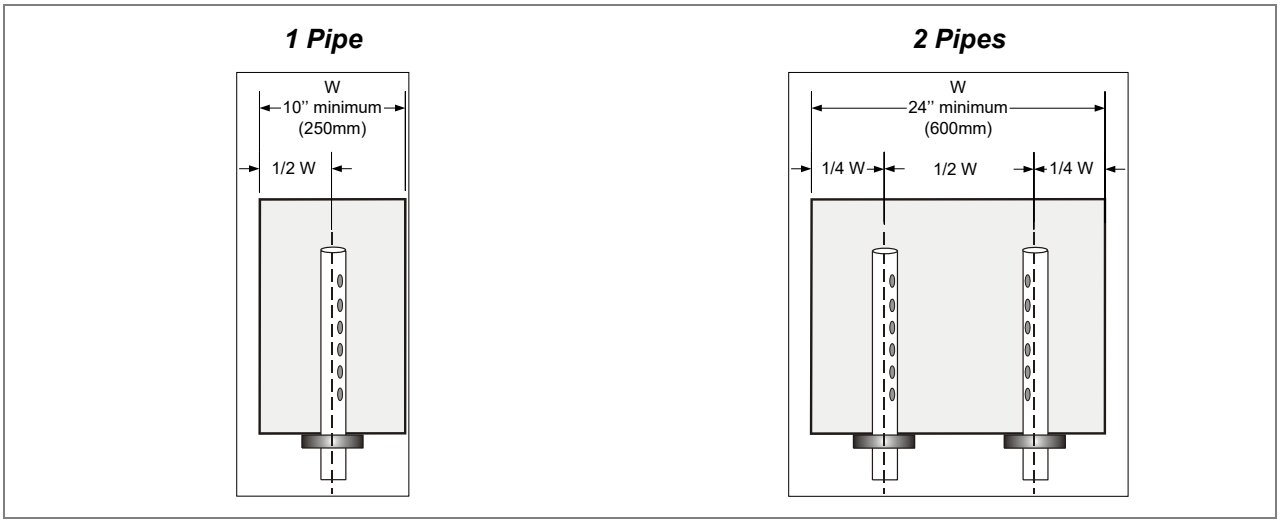

Illustration 31 - 1 ⅜" (35 mm) Diameter Pipe Placement: Vertical Duct

2" (51 mm) Diameter Pipe

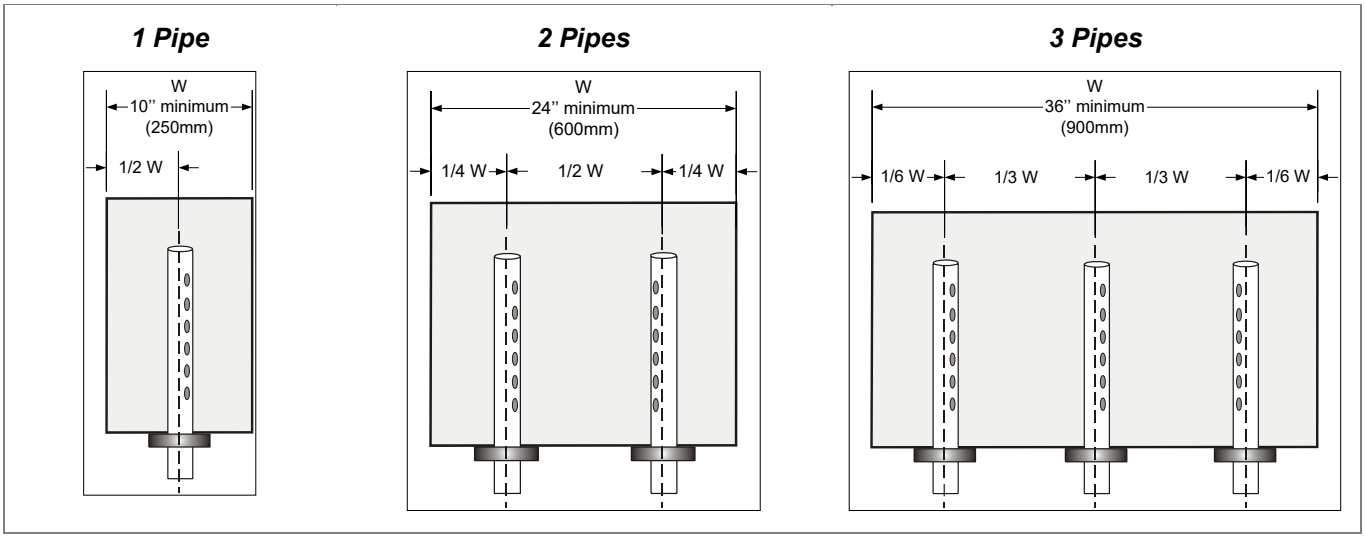

Illustration 32 - 2" (51 mm) Diameter Pipe Placement: Vertical Duct

Steam Output Connections

Installation

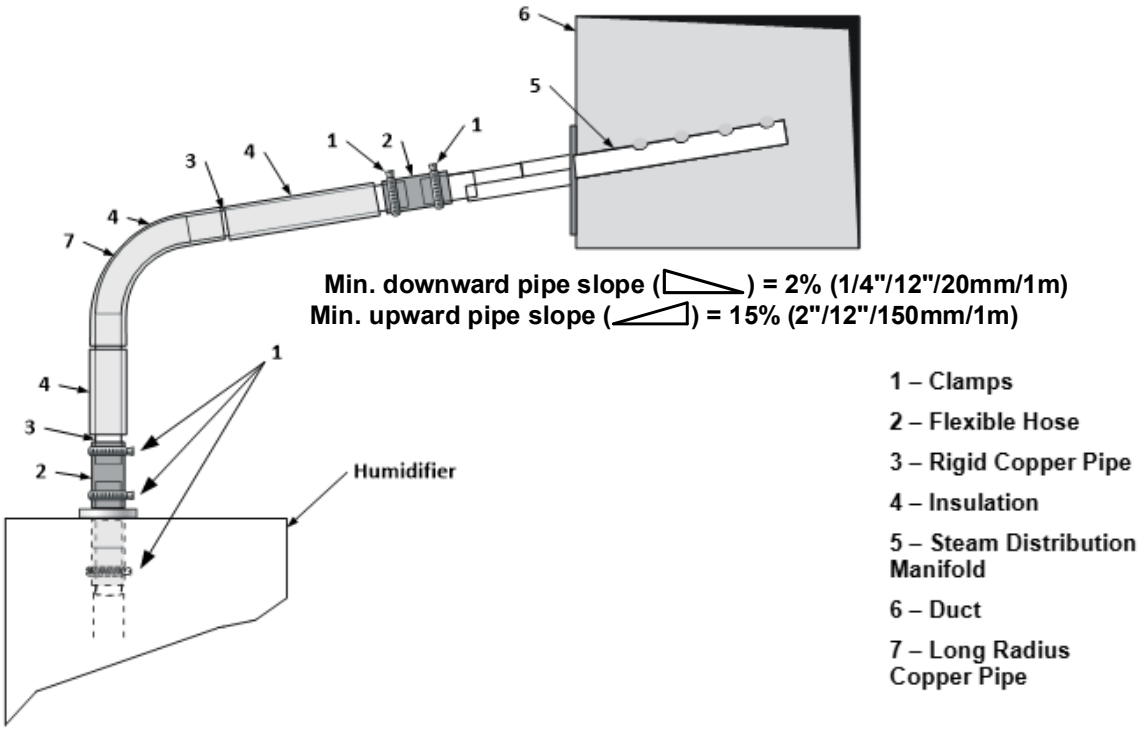

Illustration 33 - Steam Output Connections: Typical Installation

General Recommendations

Follow these general installation rules to avoid any restrictions inside the distribution pipes and the humidifier evaporation chamber, as well as condensation accumulation, which can lead to severe water accumulation in the duct or a humidifier malfunction.

CAUTION: Risk of malfunction. Avoid kinks, sags and areas where condensate can be trapped.

- Ensure that the minimum steam pipe gradient must be 2% downward and 15% upward, i.e., 1/4"/12" (20 mm per 1 m) run and 2"/12" (150 mm per 1 m) run to ensure continuous drainage of condensation back to the humidifier or to a steam trap.
- Use flexible steam hoses for short runs (up to 16 feet or 5 m) or for interconnecting between the rigid pipe runs. Ensure that there are no kinks and that the hose does not sag when using flexible tubing. Do not use flexible hoses for curved portions of the steam line.
- Determine the total steam line for insulated hard piping based on the capacity of the humidifier, such as one equivalent foot for each lb/hr capacity of the humidifier (0.67 m for each kg/hr) with a maximum of 50 feet (15 m). Consult factory for longer steam line runs.
- If you are using a rigid copper pipe, use insulation to diminish condensate build-up.

S Trap Installation on the Steam Line

- The lowest point of any steam hose or rigid pipe must be the humidifier. If the humidifier cannot be the lowest point of the piping, install one or more steam traps (S Type) at the lowest point(s) of the steam supply piping. The steam separator (S trap) must be installed higher than the static pressure of the system by at least 2” (51 mm).

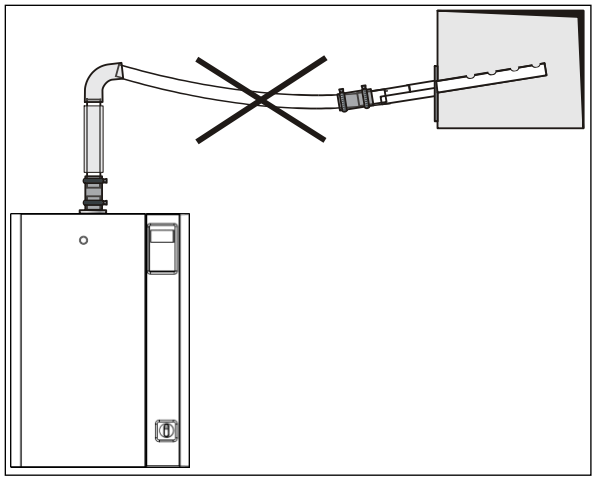

Illustration 34 - Steam Output Connection: Incorrect Installation

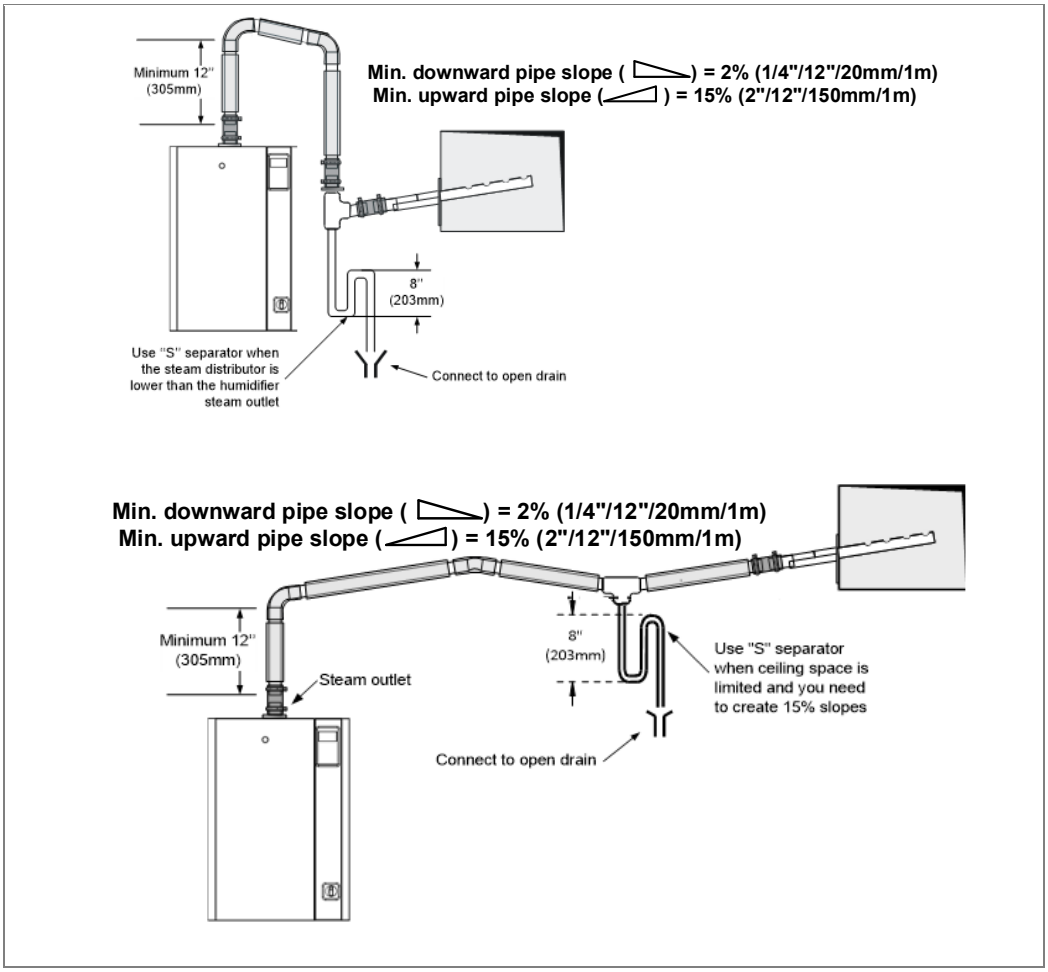

Illustration 35 - Steam Separator (S trap) Installation

Position of Steam Outputs

Table 13 - Position of Steam Outputs

Model	I	J	K
SKE4-N02 SKE4-N04 SKE4-N06	6 ¾” (171 mm)	9 ⅛” (232 mm)	-
SKE4-N10 SKE4-N14 SKE4-N16 SKE4-N20 SKE4-N30	7 ½” (191 mm)	12” (305 mm)	-
SKE4-N20 L SKE4-N27 SKE4-N32 SKE4-N40 SKE4-N50 SKE4-N60	7 ½” (191 mm)	16” (406 mm)	-
SKE4-N30 X SKE4-N40 X SKE4-N70	10 ⅞” (276 mm)	18.2” (462 mm)	-
SKE4-N80 SKE4-N90 SKE4-N100	10 ⅞” (276 mm)	9” (229 mm)	9.2” (234 mm)

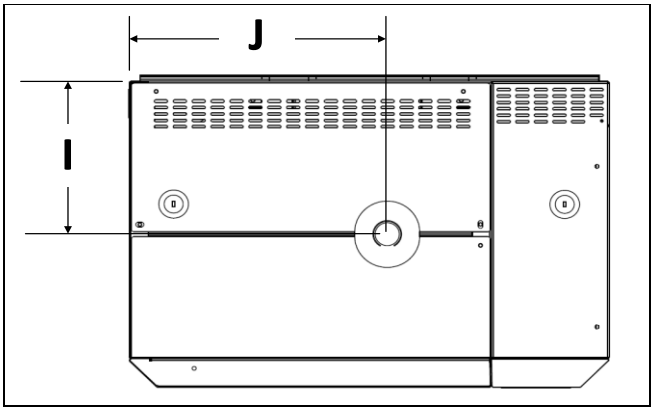

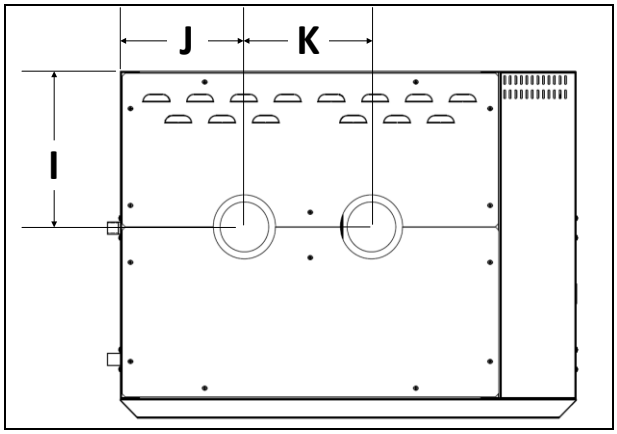

Plumbing Connections

Plumbing Installation must conform to Local and National Codes.
Any installation work must be carried out by suitably qualified personnel.

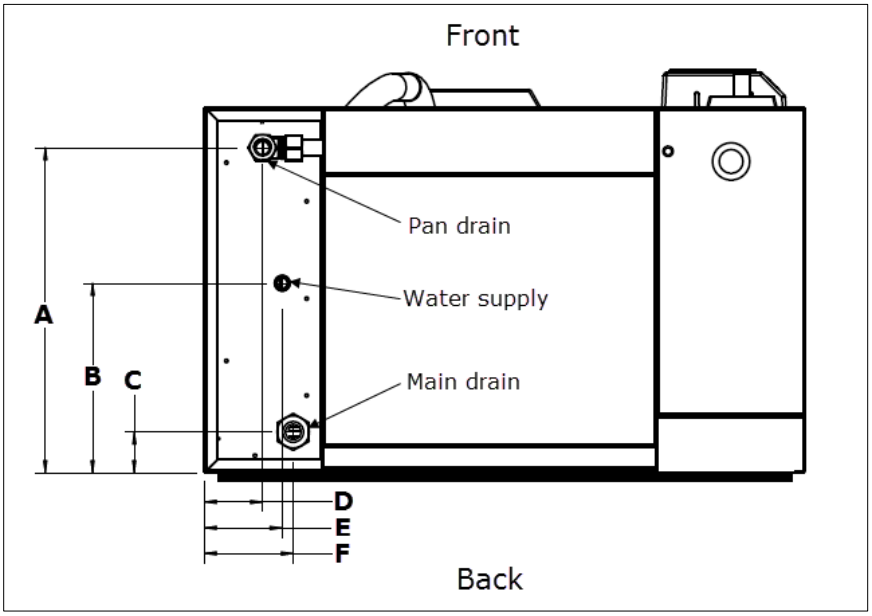

Illustration 36 - Plumbing Connections for Models SKE4-N02 to N60 (Bottom View)

Table 14 - Dimensions for Plumbing Connections (SKE4-N02 to N60)

Model	Dimensions (inch) [mm]					
	A	B	C	D	E	F
SKE4-N02 to N60	9 ⅛ [232]	7 [178]	1 ½ [38]	3 ⅛ [79]	3 ⅛ [79]	3 ⅛ [79]

Table 15 - Dimensions for Plumbing Connections (SKE4-N02 to N60 with OSHPD Preapproval [OSP])

Model	Dimensions (inch) [mm]					
	A	B	C	D	E	F
SKE4-N02 to N06	10 ⅞ [276]	7 [178]	1 ½ [38]	2 ½ [64]	2 ⅞ [73]	3 ¼ [83]
SKE4-N10 to N60	12 [304]	7 [178]	1 ½ [38]	2 ½ [64]	2 ⅞ [73]	3 ¼ [83]

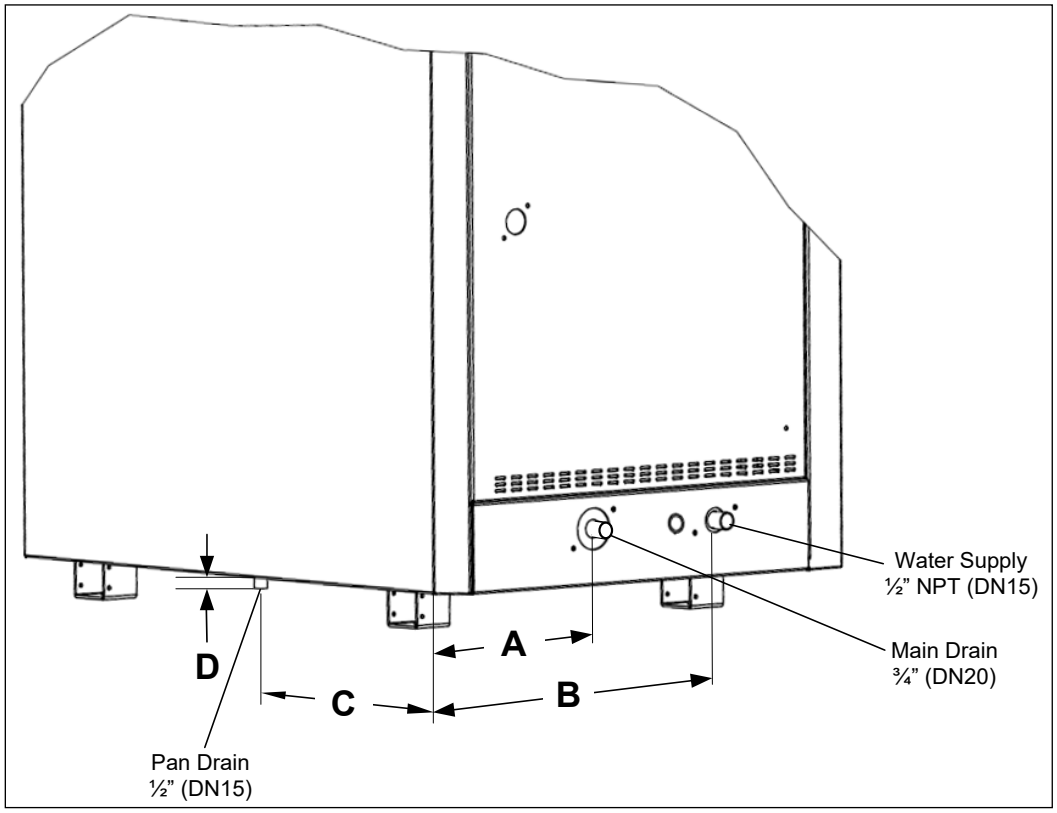

Illustration 37 - Plumbing Connections for Models SKE4-N30X to N100

Table 16 - Dimensions for Plumbing Connections (SKE4-N30X to N100)

Model	Dimensions (inch) [mm]			
	A	B	C	D
SKE4-N30 X SKE4-N40 X SKE4-N70 SKE4-N80 SKE4-N90 SKE4-N100	4 ⅛ [105]	13 ⅜ [340]	19 ¼ [489]	1 [25]

Note: For models SKE4-N30 X to N100, the water supply inlet and main drain outlet are located on the right hand side of the humidifier by default. Left hand side or bottom placement (only with weather proof enclosure option) are available upon request.

Water Supply Connections

- Water Inlet Specifications:
  - Inlet water pressure: 25 to 70 psig (1.7 to 4.8 bars)
  - Maximum temperature: 86°F (30°C)
  - ½" (DN15) standard copper water line connection or ¾" (DN20) PEX pipe line
- Water Supply Line Installation:
  - Connect a ½" (DN15) water supply braided hose (by others) to the male threaded part of the pipe.
- To facilitate servicing, install a shutoff valve (not supplied) in the water supply line close to the humidifier.
- It is recommended to install a standard water strainer in the water supply line to filter contaminants from getting into the humidifier.
- It is recommended to install a water hammer arrestor to absorb the hydraulic shock and minimize the water hammer when the fill valve closes. Follow the dimensioning and installation in accordance with the local plumbing code.

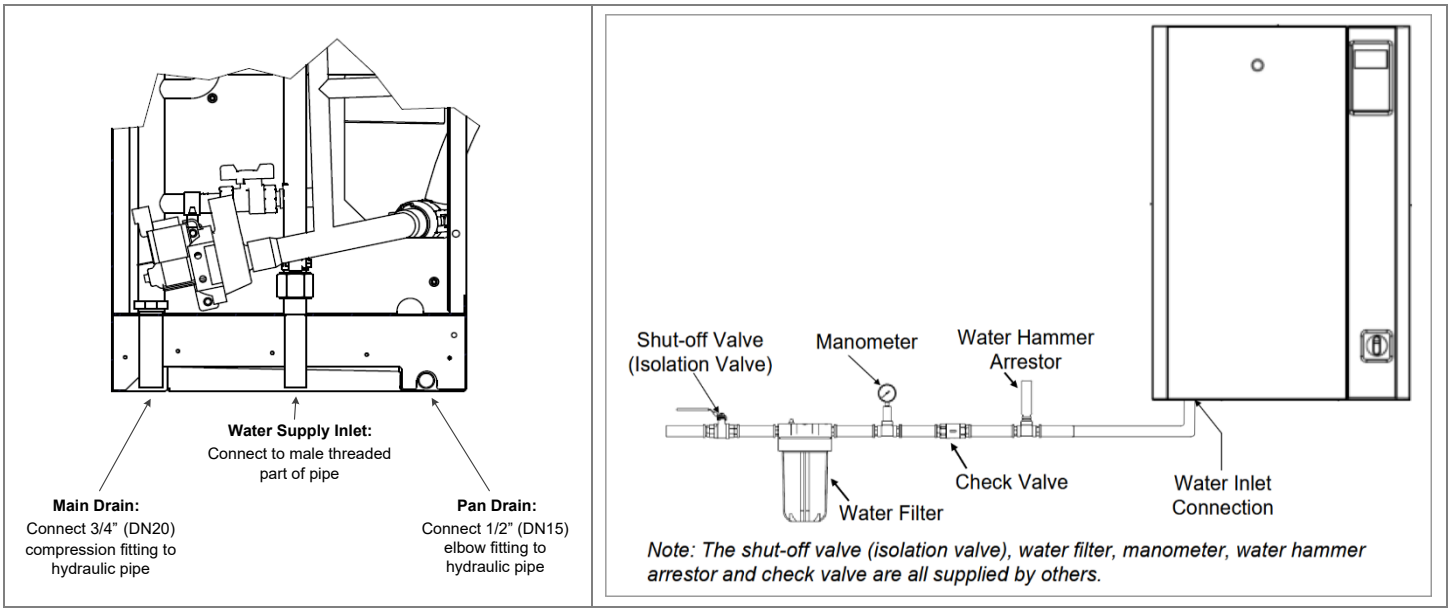

Illustration 38 - Water Supply and Drain Connections

Water Drain Connections

- Water Drain Specifications:
  - Evaporation chamber water drain temperature: 140°F (60°C).
  - Standard hydraulic fittings (supplied): a ¾" (DN20) female compression fitting for the evaporation chamber drain and a ½" (DN15) female elbow fitting for the pan drain.
- 2 hydraulic pipes (not supplied) must be placed underneath the humidifier and connected to the drain pipes (see Illustration 38 - Water Supply and Drain Connections).
- Use ¾" (DN20) and ½" (DN15) standard copper or stainless steel hydraulic pipes. Do not undersize the drain pipes.
- The installed drain piping must be rated for a temperature of 212°F (100°C).
- Ensure that the drain pipe dimension is sufficient, especially if more than one humidifier is evacuating into the same drain line.
- The minimum drain pipe gradient must be of ¼" (6.5mm) per foot (300mm).
- The humidifier drain pipes must not have a drain trap installed and must be piped to an open drain.
- The open drain pipe must have a minimum diameter of 1-1/2" (DN40).
- The main drain and pan drain must not be piped together or to other appliances.
- The maximum equivalent pipe length of the ¾" (DN20) drain must not exceed 15ft (4.5m) between the drain outlet of the humidifier and the open drain. Otherwise, the drain pipe diameter must be increased to 1-1/2" (DN40).
- The maximum drain flow rate of one SKE4 unit is equivalent to 12gpm (48 l/min).
- A minimum 1'' (25mm) air gap must be kept between the connection of the humidifier drain pipes and the open drain line.

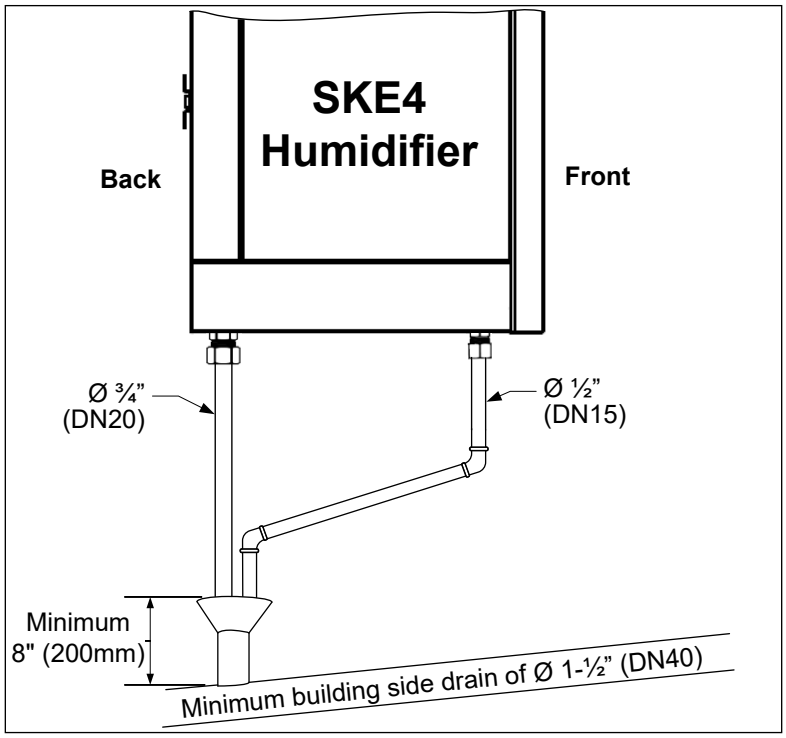

Illustration 39 - Plumbing Connection to Open Drain

Weather Proof Enclosure Plumbing Connection

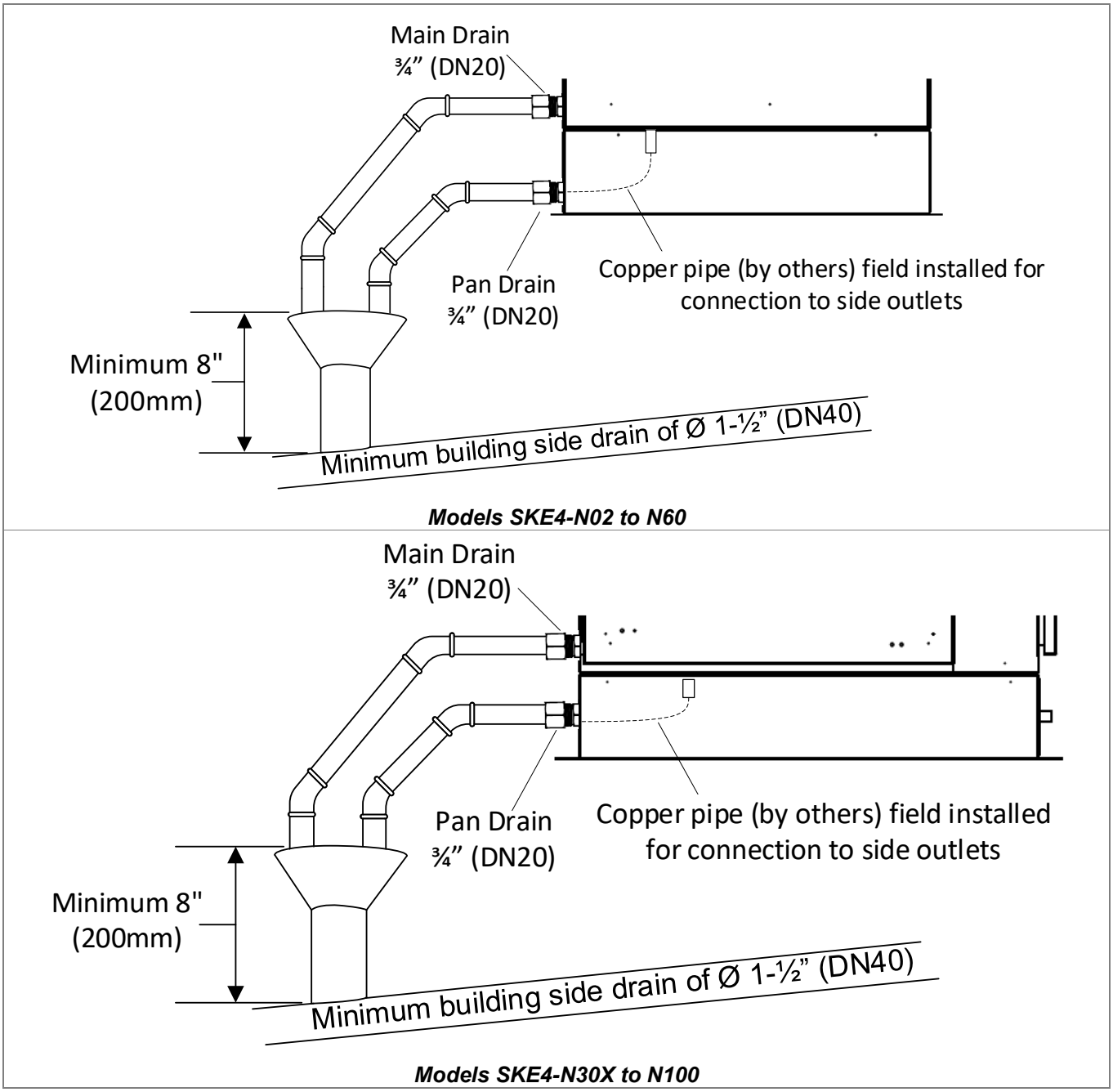

Illustration 40 - Weather Proof Enclosure Plumbing: Front View

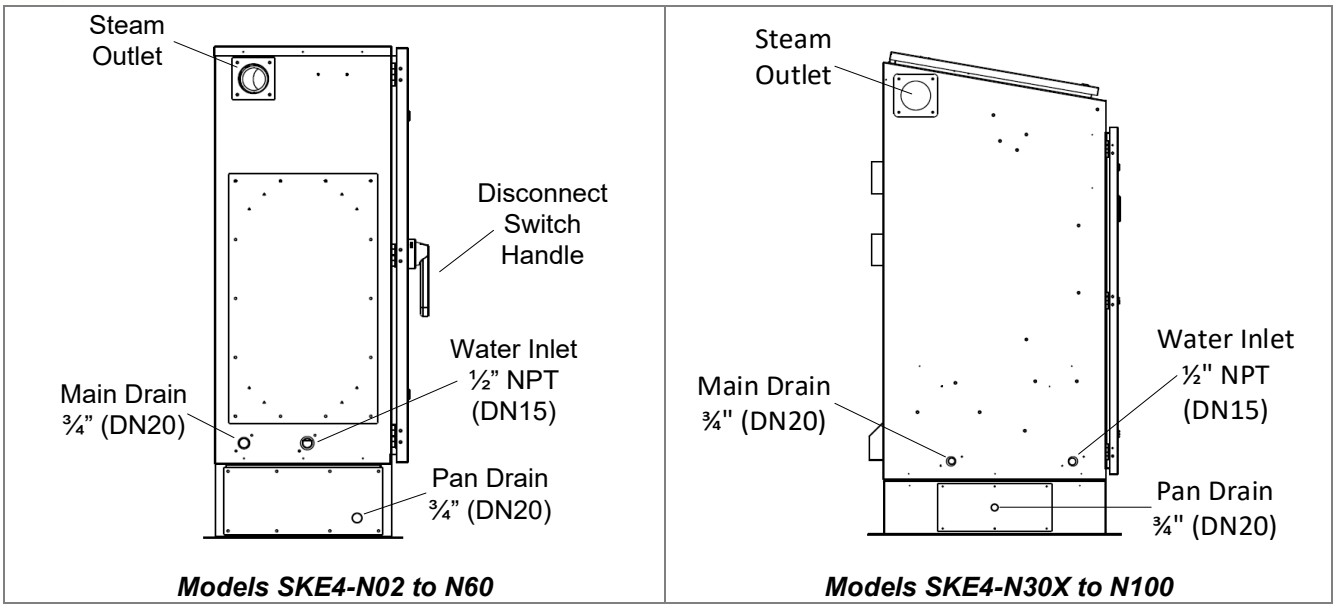

Illustration 41 - Weather Proof Enclosure Plumbing: Side View

Note: By default, the steam outlet, water supply inlet and main drain outlet are on the left hand side, and the pan drain outlet is located on the bottom of the humidifier. Other locations of any of these outlets or inlets are available upon request.

Weather Proof Enclosure Water Drain Valve

The weather proof enclosure is equipped with a normally open valve, enabling the humidifier to drain all water during a power failure, in order to prevent water from freezing within the unit. During normal operation, the humidifier reduces drain water temperature to 140°F (60°C).

CAUTION: During a power failure, the drain water temperature is not reduced for units with the weather proof enclosure. Installed drain piping must be rated to 212°F (100°C).

Water Treatment Guidelines

Water treatment, such as reverse osmosis and deionization, can dramatically reduce the service requirements of the humidifiers in hard water environments. The use of purified water allows for longer operation time in between drain intervals, which can be important for maintaining humidity control in high-demand applications.

The SKE4 humidifier can operate with tap, reverse osmosis and deionised water.

- For normal operation, pre-treatment of water is not necessary.
- For ultrapure deionised or reverse osmosis water (2-10 µS/cm), the pure DI humidifier option must be used.
- As the humidifier is equipped with the Neptronic Anti-Foaming Energy Conservation (AFEC) system, which drains the humidifier in the presence of foam to ensure clean and safe operation, the use of softened water is not required.
- If a third party requires a water softener for any operational or equivalency purposes, ensure that the water dilution feature is enabled. To enable this function, configure the value of the *BlowdownRate* setting located in the *Installation* menu (see page 60 for details).

Here are some general guidelines to follow regarding water treatment:

Total Hardness (mg/L or PPM)	*Description*	*RO Recommended?*
<50	Soft	No
61-120	Moderately Hard	Optional (based on application requirements)
120-180	Hard	Yes
181-800	Very Hard	Yes
>800	Extremely Hard	Yes, High-TDS System Required

Chloride Concentration in Water Supply

WARNING: Damage from corrosion is not covered under warranty. Refer to Stage 4 - Remove and Clean the Evaporation Chamber on page 75.

The presence of chlorides (Cl-) can cause corrosion to the humidifier components that operate at elevated temperatures, such as the evaporation chamber and heating elements.

Here are some general guidelines to follow for chloride concentration based on the type of water used:

Water Source	*Chloride (mg/L or PPM)*
RO/DI	< 5
Softened	< 30
Tap	< 50

Electrical Connections

CAUTION: Risk of electric shock. Disconnect the humidifier from the electric supply before proceeding with the connection.

WARNING: Risk of fire. Do not interchange the power terminal block designated L1, L2 and L3 with low voltage terminal block designated 1, 2 and 3.

- The wiring to the humidifier must be done by a qualified electrician and must conform to the procedure, regulation and local codes.
- Use copper conductors only.
- The humidifier is equipped with a built-in disconnect switch, to turn off the power without opening any access doors.
- An external over current protection must be installed on the supply, adjacent to the humidifier. It is also recommended to install a circuit breaker.
- To provide strain relief to the supply cable, install a knock-out (not supplied) at the bottom of the electrical compartment of the humidifier.
- Ensure that the size of the wire conductors is appropriate for the current supplied.
- Ensure that each terminal connection is properly secured.
- Ensure that the ground conductor is equipped with a ring terminal and is connected directly to the electrical panel.

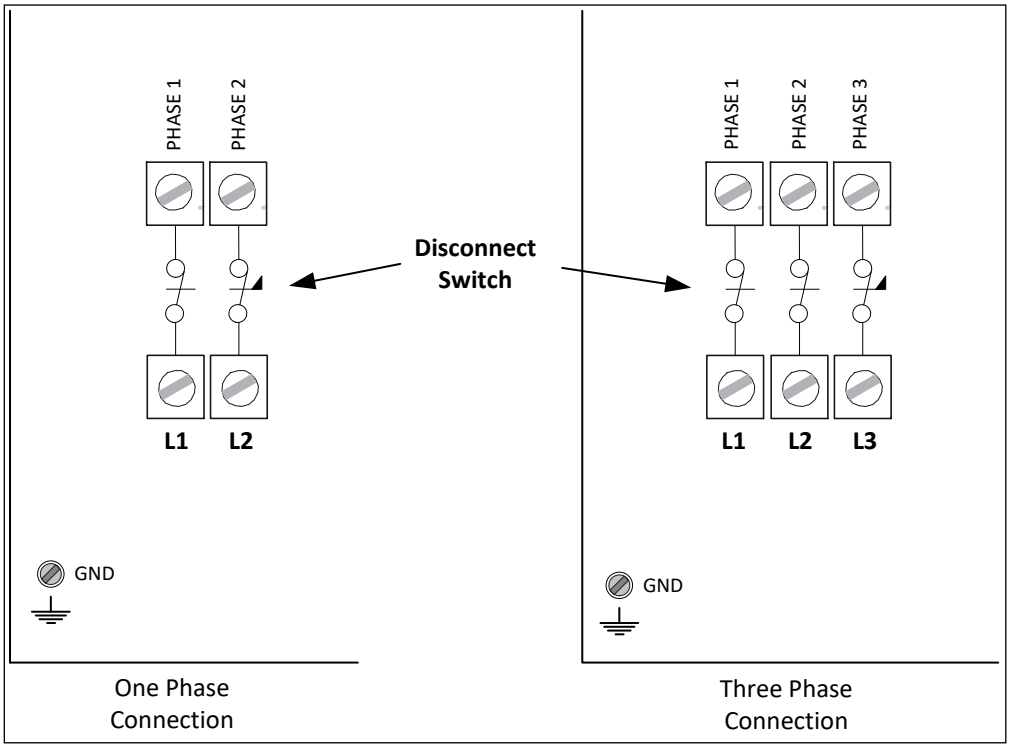

Illustration 42 - One and Three Phase Power Connections

Power Supply Hole Locations

The high voltage compartment of the humidifier is equipped with knockout holes, enabling field wiring to pass through.

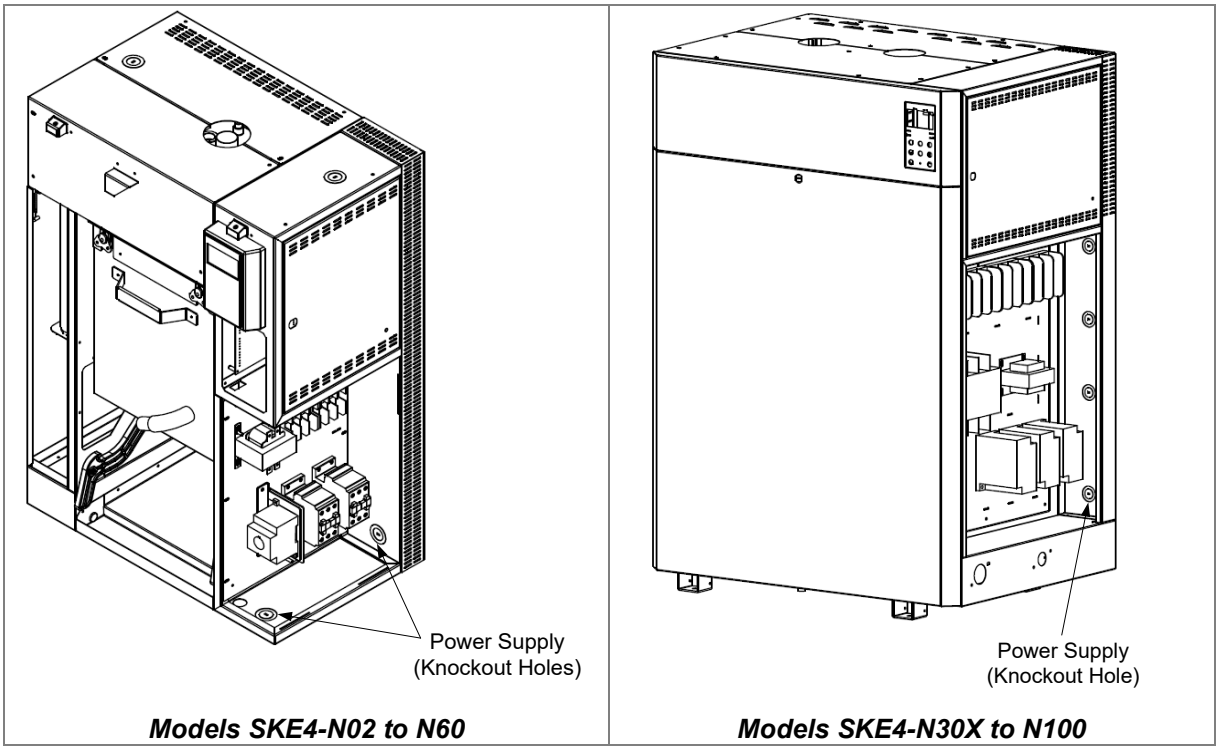

Illustration 43 - Power Supply Holes (Standard Humidifier)

For humidifiers having the weather proof enclosure, designated power supply holes are located in the bottom of the high voltage compartment, enabling field wiring to pass through.

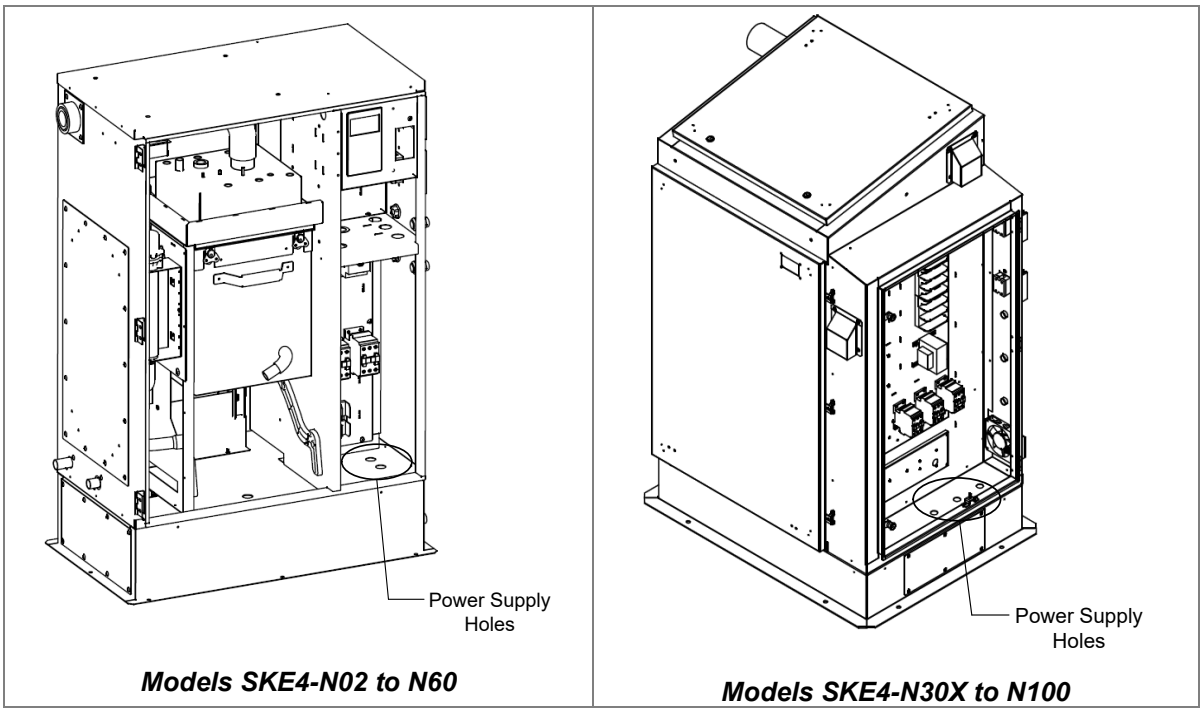

Illustration 44 - Power Supply Holes (Weather Proof Enclosure)

Low Voltage Control Connections - Printed Circuit Board
1 Phase, 1 Stage - SKE4-N02 to N06

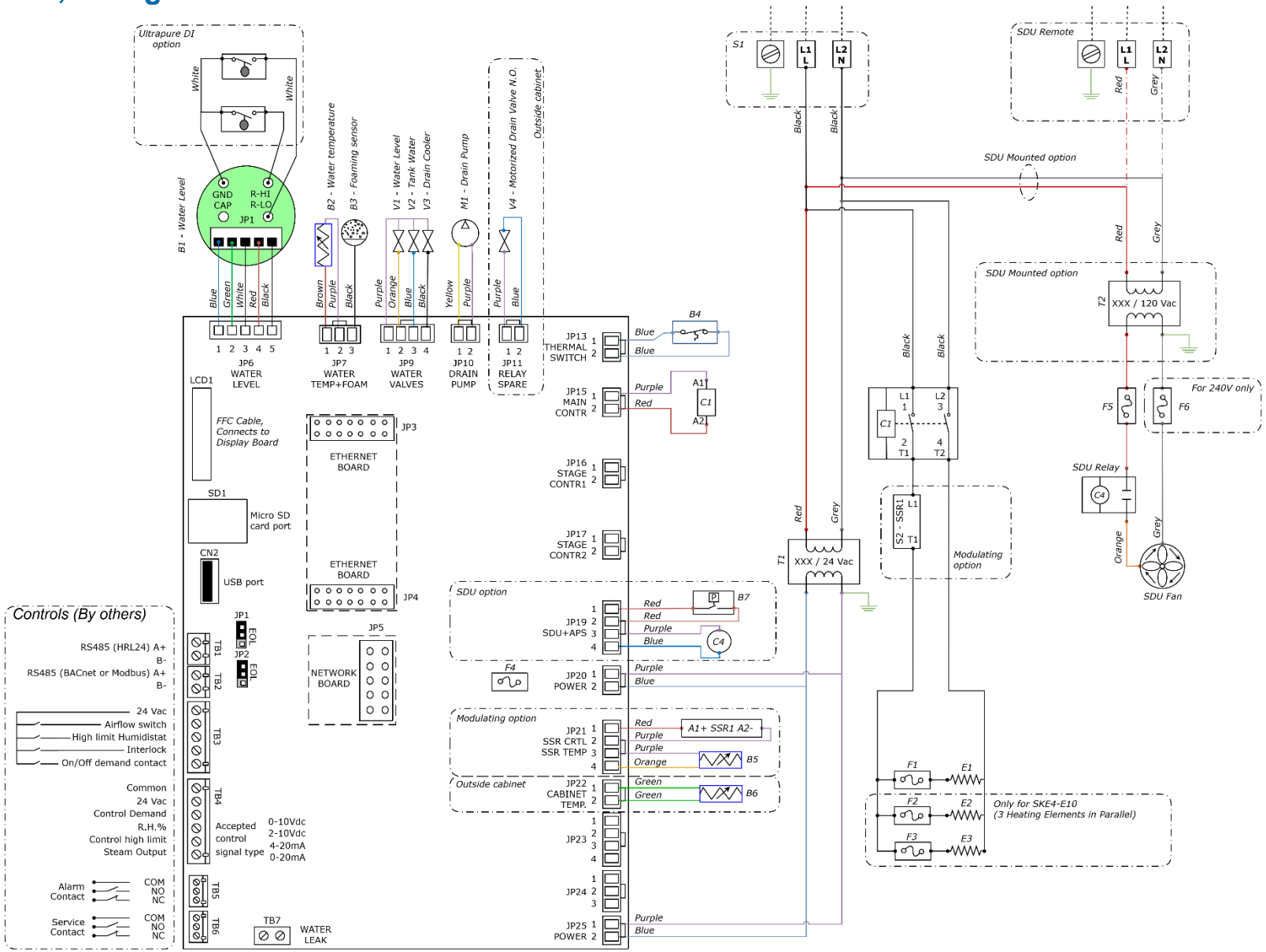

3 Phases, 1 Stage - SKE4 N04 to N32

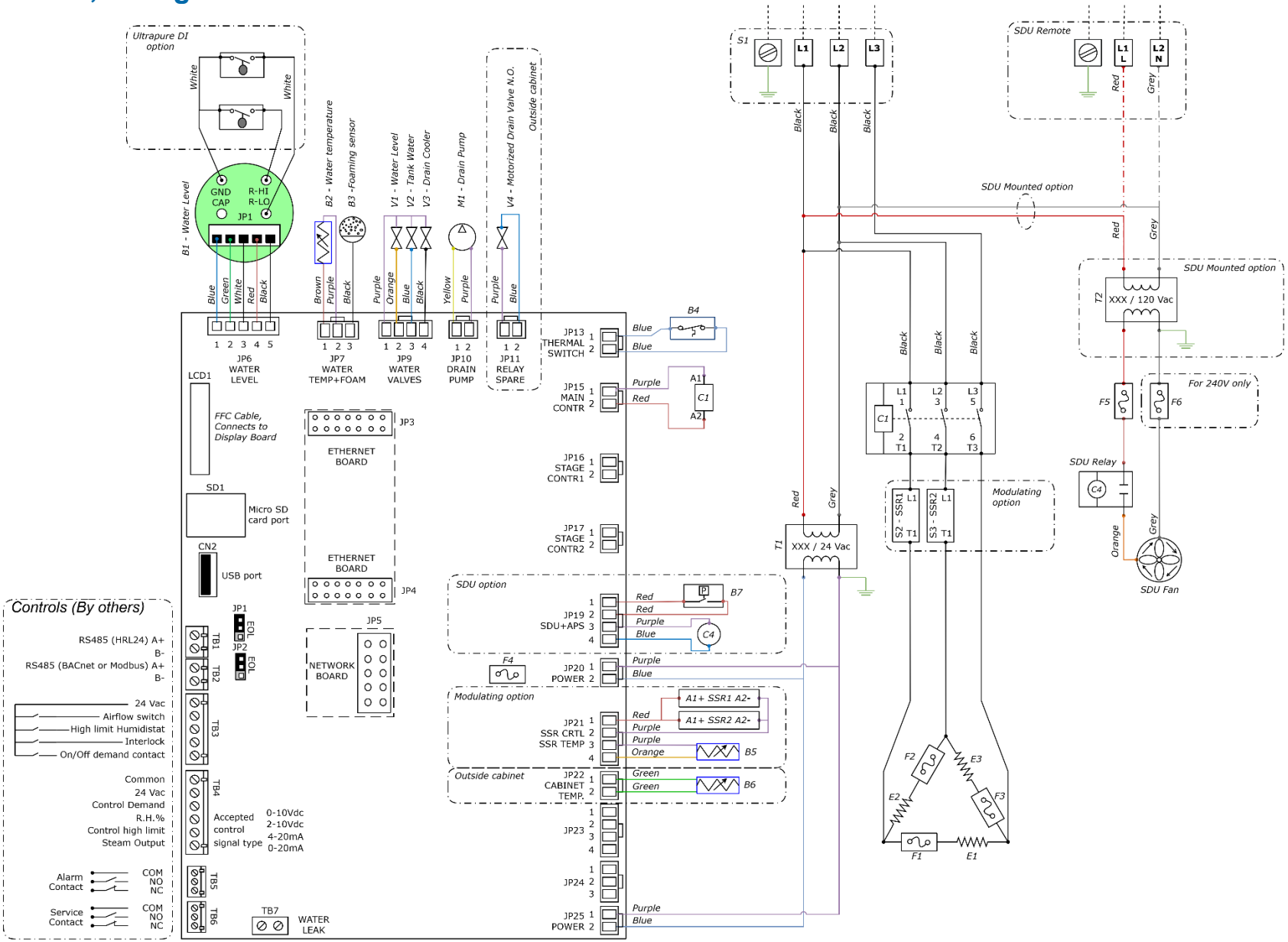

3 Phases, 2 Stages - SKE4 N20L to N60

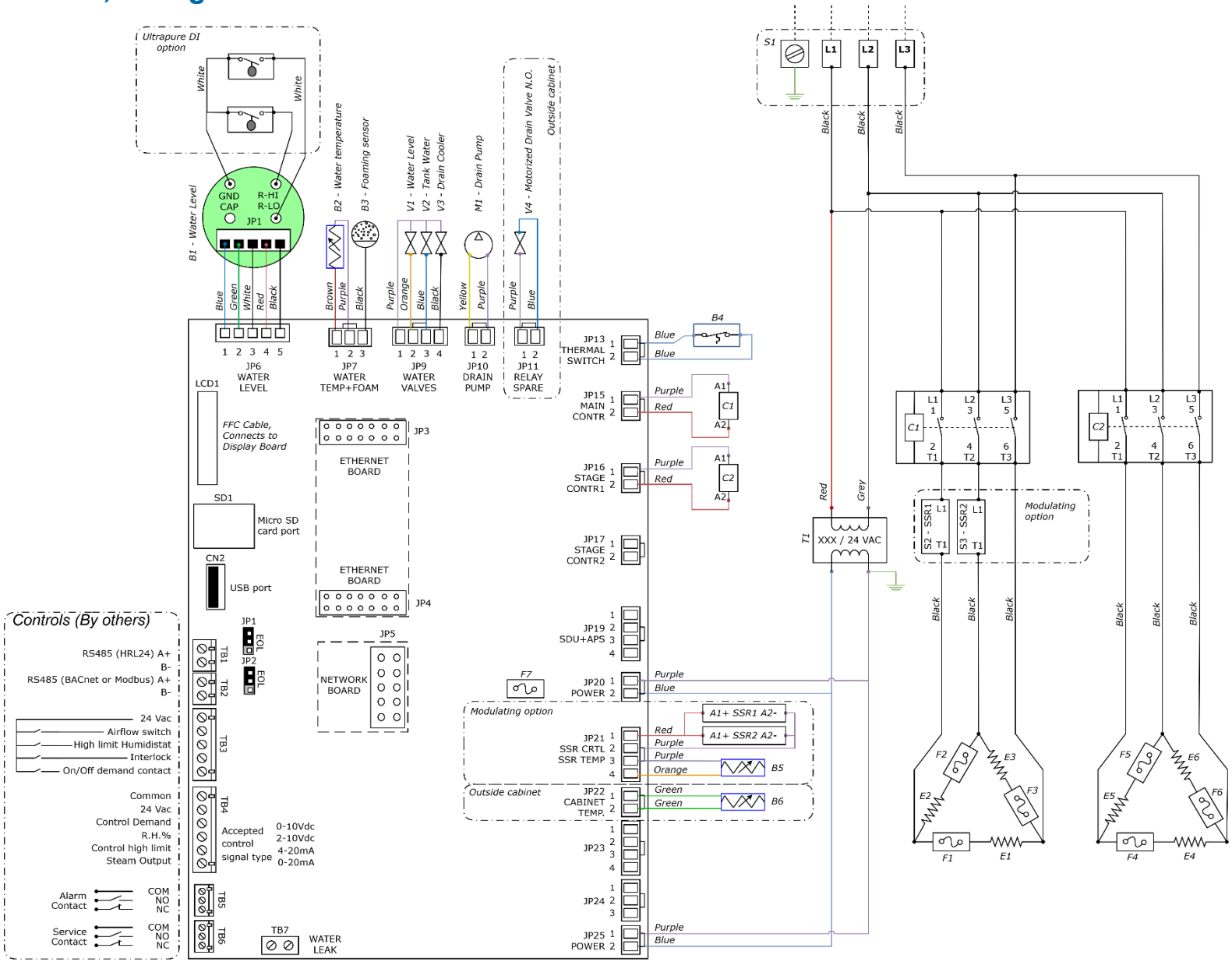

3 Phases, 3 Stages - SKE4 N30X to N100

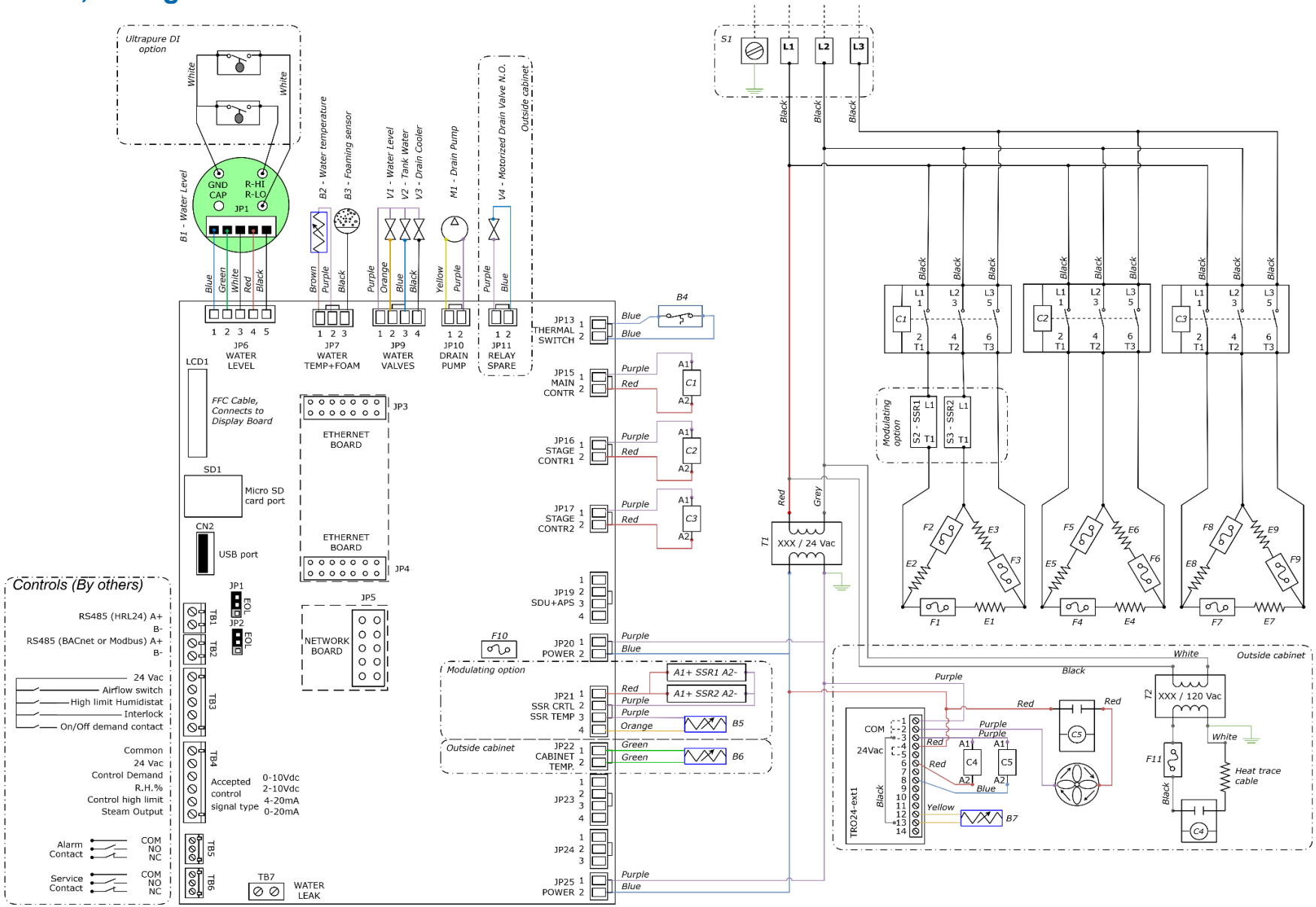

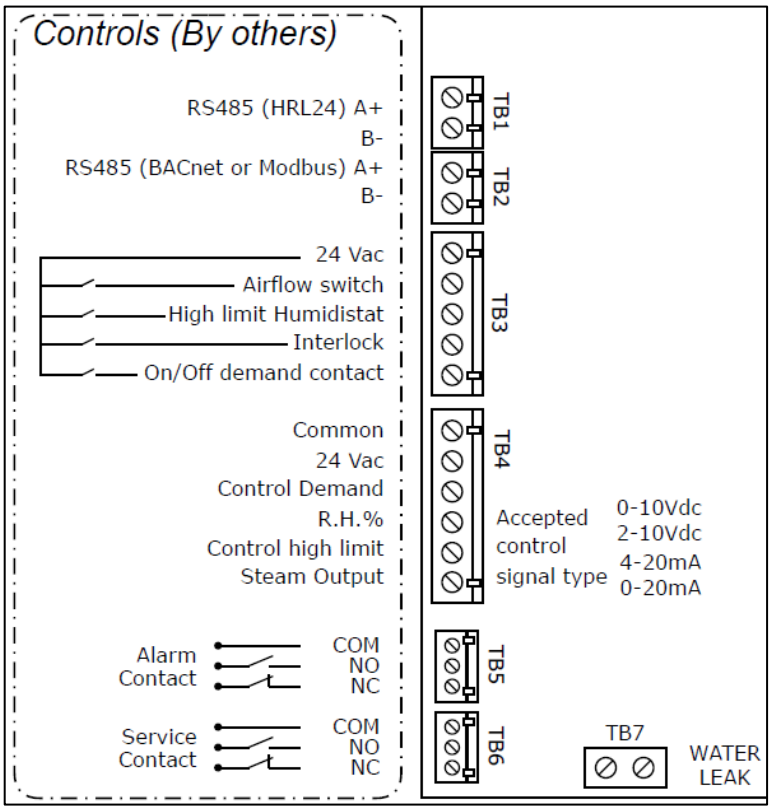

Illustration 45 - Electrical Control Connections

Network Communication (TB1 and TB2)

If the control signal is from a HRL24, connect terminals **TB1 1&2** to the network (RS485 A+ & B-).

If the control signal is from a BACnet MS/TP or Modbus RTU network, connect terminals **TB2 1&2** to the network (RS485 A+ & B-).

The network control signal(s) must be selected by accessing the *Control* sub-menu located in the *Installation* menu (see page 60). To setup the communication parameters, access the *Integration* menu (see page 64).

Note: BACnet MS/TP is configured by default. To change the communication interface to Modbus RTU, access the NtwrkOption *setting located in the* Network *sub-menu of the* Integration *menu (see page 64).*

Safety Contact Connections (TB3)

The **Airflow switch** contact must be wired between terminals TB3 1&2. If this contact opens, operation of the SKE4 unit will stop. The unit will display the airflow switch as open, but will not generate an alarm. If an airflow switch is not used, install a jumper between terminals TB3 1&2.

The **High limit humidistat** contact must be wired between terminals TB3 1&3. If this contact opens, operation of the SKE4 unit will stop and an **alarm** message will be displayed. If a high limit humidistat is not used, install a jumper between terminals TB3 1&3.

The **Interlock** must be wired between terminals TB3 1&4. If this contact opens, operation of the SKE4 unit will stop. The unit will display the Interlock as open, but will not generate an alarm. If Interlock is not used, install a jumper between terminals TB3 1&4.

The **On/Off demand contact** must be wired between TB3 1&5. When contact is closed, 24V is supplied and the SKE4 unit will operate at 100%. When contact is open it will stop the unit idle state.
**This demand contact only works for the operation of On/Off models*

Control Analog Connections (TB4)

The control profile and the source of the signals can be configured via ***Menu*** > ***Installation*** > ***Control***.
This configuration determines the behavior of **TB4** (see page 60 for more details).

Table 17 - Profile Selection for Control Demand

Control Signal	External	Network	ExternNetwork
		Analog	ExternAnalog
	Internal	Network	InternHumNetwork
		Analog	InternHumAnalog

Table 18 - Profile Selection for High Limit

High Limit Signal	External	Network	ExternNetwork
		Analog	ExternAnalog
	Internal	Network	InternNetwork
		Analog	InternAnalog
	Disabled	-	Disabled

Network sourced signals are connected via **BACnet MS/TP** or **Modbus** to **TB2**.

For the external profiles, the control signal is used directly as the demand %.

- The control signal coming from an analog source is connected to **TB4-3**.
- The high limit analog signal is connected to **TB4-5**.

For the internal profiles, the signal will be processed by an internal PID loop to calculate the demand %.

- The R.H.% reading signal is connected to the input **TB4-4**.
- The high limit analog signal is connected to **TB4-5**.
- The control setpoints are to be configured in ***Menu*** > ***User Settings*** > ***Control*** (see page 58).
- The PID settings are to be set in ***Menu*** > ***Installation*** > ***Control*** (see page 60).

TB4-6 is an analog output, which gives feedback of the % demand at which the unit is currently operating.

Dry Contacts (TB5 and TB6)

Two series of volt free contacts are provided and will be activated according to the humidifier state:

1. Alarm Contacts
2. Service Contacts

- These contacts are used to switch a low voltage, ideally 24V, with a switching current of no more than 3 Amps.
- Each series has one Normally Closed contact and one Normally Open contact.
- It is recommended to use the Normally Closed contact, as this contact will open in the event of a humidifier fault.

ON/OFF Humidifier

For operation of On/Off humidifiers, connect the On/Off demand contact between **TB3 1&5**. If this contact opens, the SKE4 unit will turn off. If this contact closes, the SKE4 unit will operate.

Modulating Humidifier

Humidity Control by Humidistat (External Mode)

Humidity controlled externally, using HRO20 humidistat with optional SHR10 or SHC80 as space sensor:

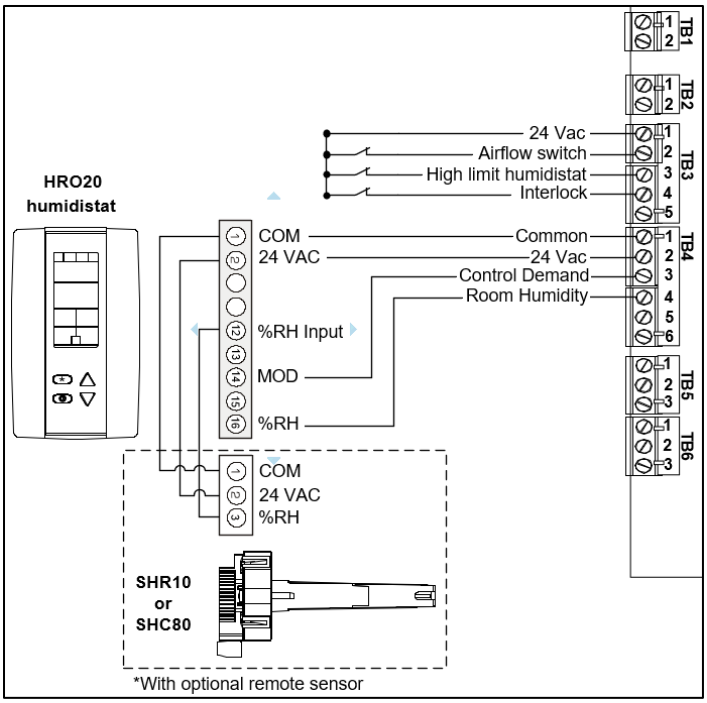

Illustration 46 - Control Signal from HRO20 Humidistat with Optional Remote Humidity Sensor (SHR10 or SHC80)

Humidity Control by Humidifier (Internal Mode)

Humidity controlled internally, using SHR10 or SHC80 as space sensor:

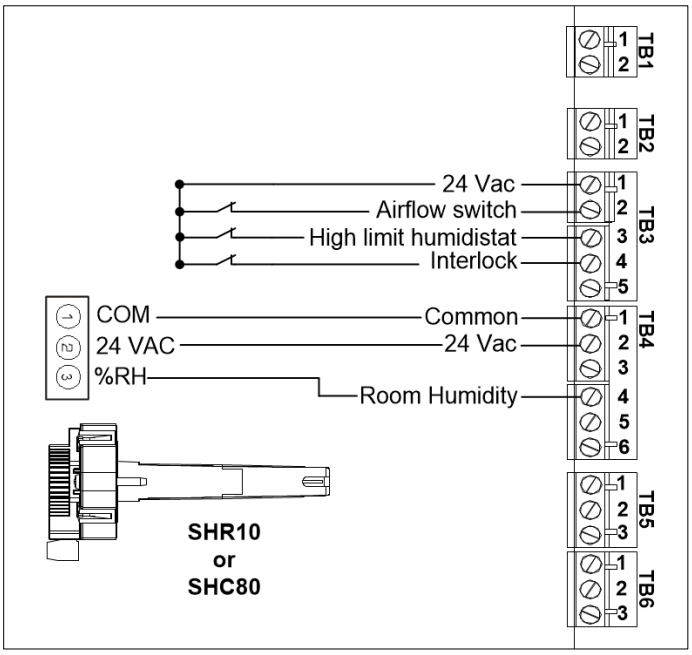

Illustration 47 - Humidity Signal from Remote Humidity Sensor (SHR10 or SHC80)

Controls Placement (Steam Dispersed into a Duct or AHU)

A typical humidifier control system includes the following along with the humidifier:

- A wall or return duct humidistat
- A high limit duct humidistat
- An airflow switch

Placement of these devices is critical to the proper operation of the overall system.

- The return air humidistat must always be located in the return air duct, in order to ensure accurate sensing of the air from the humidified space.
- Alternatively, a room humidistat can be used. The room humidistat must be located on an inside wall or column. It must not be near any discharge air from supply ducts or sources of heat or cold.
- The airflow switch must be placed in a position capable of accurately opening on a loss of air flow, in order to prevent the humidifier from running when there is no air to absorb humidity.
- The high limit humidistat must be positioned far enough, minimum 15 ft (4.6 m), downstream of the steam dispersion manifold(s) to prevent over humidification of the duct that could result in condensation.
- Any device that may be triggered by high humidity levels in close proximity to the steam dispersion manifold must also be positioned at least 15 ft (4.6m), downstream of the dispersion manifold(s).

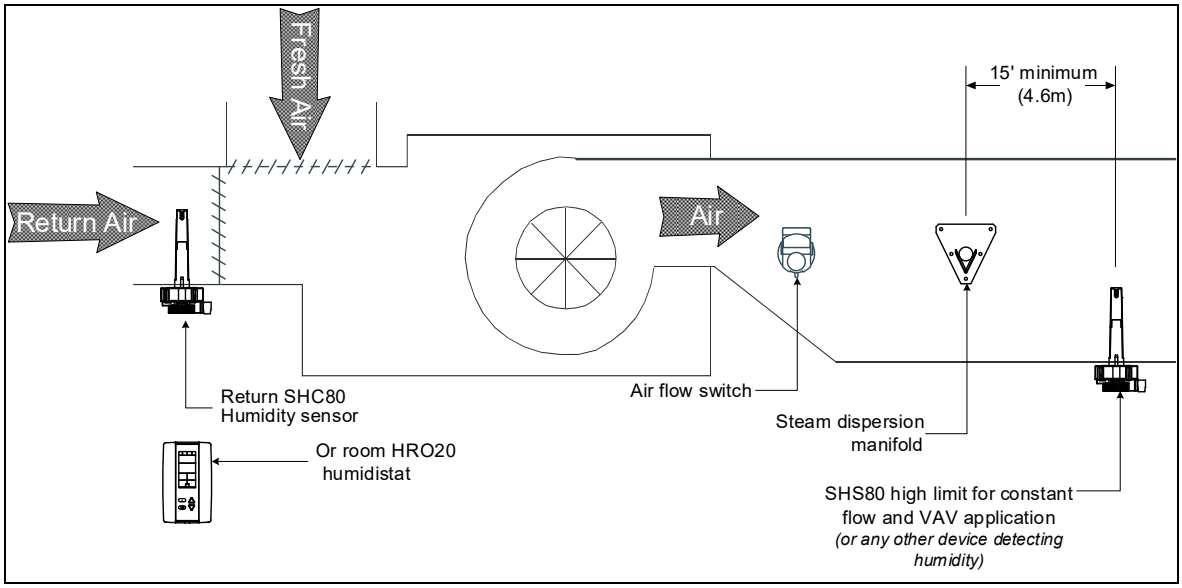

Illustration 48 - Controls Placement (Steam Dispersed into a Duct or AHU)

Controller Configuration

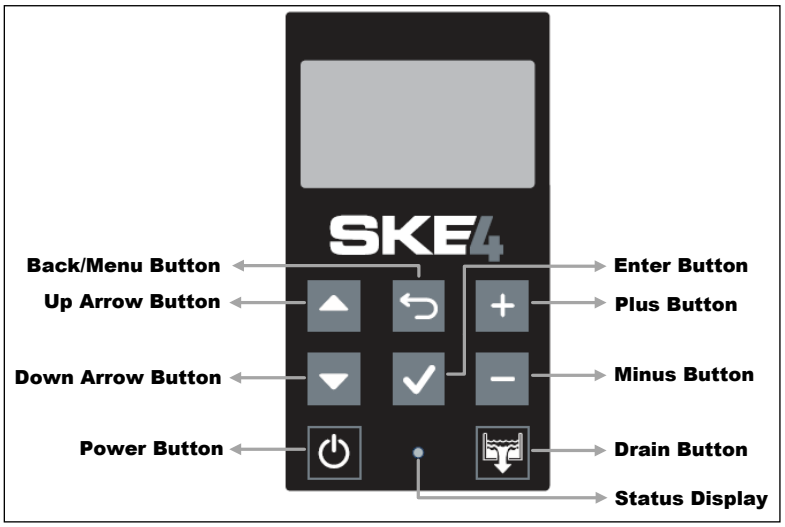

Illustration 49 - SKE4 Controller

Control Panel Features

The following are the features of the Control Panel and their description:

Table 19 - Humidifier Control Panel Description

Feature		Description
Status Display	☼ (Blue)	Indicates that the humidifier is turned on. The LED will begin blinking as the system is initializing.
	☼ (Red)	Indicates that the alarm is issuing a warning and that the system must be verified.
	O (Off)	Indicates that the humidifier is turned off.
Power Button	⏻	The power button is used to turn the humidifier on or off. Must be pressed and held for 3 seconds to perform the related action, in order to prevent accidental activation. Even when the humidifier is powered off, the controller remains operational.
Drain Button		The drain button is used to manually activate the drain cycle. Must be pressed and held for 3 seconds to perform the related action, in order to prevent accidental activation. Even when the humidifier is powered off, a drain cycle may be initiated. *Once the manual drain cycle is completed, the system will automatically be powered off. To turn the humidifier back on, press and hold the power button.*
Up and Down Arrow Buttons	▲ ▼	The up arrow button is used to scroll to the next menu item or parameter. The down arrow button is used to scroll to the previous menu item or parameter.
Plus and Minus Buttons	+ –	The plus button is used to increase the value of the displayed parameter. The minus button is used to decrease the value of the displayed parameter.
Back/Menu Button	↩	The back/menu button is used to go to previous menu or to access the Main Menu page from the Idle Screen.
Enter Button	✓	The enter button is used to advance to the next sub-menu, to access the selected option or to confirm set parameter value.

Idle Screen

When the controller is in operation, the unit displays the following information on the Idle Screen:

Table 20 - Idle Screen Display Description

Setting	Default	Range (** indicates no configuration; display only*)	Description/Notes
HumDemand:	*Current value*	* (min: 0.00%, max: 100.00%)	Displays the current humidity demand value.
ControlState:	*Current value*	* (Off, Normal, LowLimit, HighLimit, NoAirFlow, Interlock)	Displays the current state of the safety control circuit and whether the circuit has been disconnected due to a safety switch.
PowerOutput:	*Current value*	* (min: 0.00%, max: 100.00%)	Displays the measured power output of the system as a percentage of the total power.
State:	*Current value*	* (Off, Idle, LineRinse, TankRinse, Filling, Draining, Heating, Boiling, Alarm)	Displays the current state of operation of the humidifier.

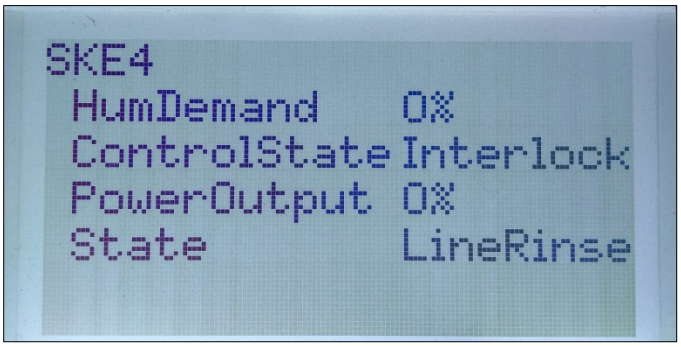

Illustration 50 - Idle Screen Display

Menu Access

- From the Idle Screen, the Main Menu can be accessed by pressing the Back/Menu button ⮌, enabling access to the General menu.
- To view other menu options and perform configurations to the system, press Enter ✓ while on the Idle Screen to advance to the Login Screen, where a valid password must be entered.
- Four different passwords can be used, each granting access to an additional menu option depending on the access level assigned to the provided password.
- If a password of higher access is provided, all menu options accessible with the use of a lower level password will also be unlocked.

Table 21 - Access Levels

Access Level	Password	Menu Unlocked	Description/Notes
1	None	General	Grants access to General menu.
2	2222	User	Grants access to General and User menus.
3	3322	Service	Grants access to General, User and Service menus.
4	4433	Installation	Grants access to General, User, Service and Installation menus.
5	5544	Integration	Grants access to General, User, Service, Installation and Integration menus.

Note: To modify or retrieve lost passwords, please contact factory.

A. After accessing the Login Screen, use the **+** or **-** buttons to increase or decrease the value of the number that is highlighted.

B. Use the ▲, ▼ buttons to scroll to the next or previous number.

C. Press Enter ✔ to confirm the password once completed. If you enter the wrong password, the SKE4 controller displays a *"Login Failed"* message.

D. The Back/Menu button ⮌ may also be used to return to the Idle Screen display.

Illustration 51 - Login Screen

Menu Navigation and Configuration

A. Use the ▲, ▼ buttons to select the desired menu category and press Enter ✔ to advance to the next sub-menu.

B. Use the **+** and **-** buttons to increase and decrease values. Use the ▲, ▼ buttons to scroll to the next or previous parameter. Values are saved as soon as a change is made.

C. Press the Back/Menu button ⮌ to go back one menu. The current menu location is displayed at the top of the screen.

D. To exit completely, press the Back/Menu button ⮌ until you return to the Idle Screen. After 5 minutes of inactivity, the controller will automatically return to the Idle Screen.

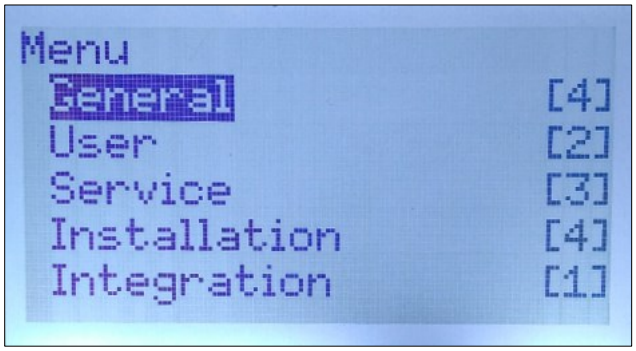

Illustration 52 - Main Menu Page

Note: Available settings and range selections may vary depending on current configuration. The tables in the following sections display all the possible selections. The Description/Notes column indicates the conditions required for the associated setting to appear.

Menu - General [Level 1 - No password required]

Press the back/menu button from the Idle Screen to access the General menu.

Sub-Menu	Setting	Default	Range (** indicates no configuration; display only*)	Description/Notes
Status	AirFlow:	Closed	* (Closed, Open)	Displays the status of the airflow switch. If *Open* is displayed, it indicates that the airflow is not detected by the air pressure switch.
	SupplyHighLimit:	Closed	* (Closed, Open)	Displays the status of the high limit contact. If *Open* is displayed, it indicates that the humidity level has exceeded the setpoint on the high limit humidistat.
	Interlock:	Closed	* (Closed, Open)	Displays the status of the interlock. If *Open* is displayed, it indicates that the humidifier is stopped as a result of the interlock safety being open.
	OccupancyState:	*Current value*	* (Occupied, Unoccupied, Vacant, Off)	Displays the current occupancy state.
	ControlState:	*Current value*	* (Off, Normal, LowLimit, HighLimit, NoAirFlow, Interlock)	Displays the current state of the safety control circuit and whether the circuit has been disconnected due to a safety switch.
	BoilerDemand:	*Current value*	* (min: 0%, max: 100%)	Displays the measured humidity demand of the humidifier.
	PowerOutput:	*Current value*	* (min: 0%, max: 100%)	Displays the measured power output of the system as a percentage of the total power.
	ServiceDue:	No	* (No, Yes)	Displays whether the humidifier is due for servicing.
	State:	*Current value*	* (Off, Idle, LineRinse, TankRinse, Filling, Draining, Heating, Boiling, Alarm)	Displays the current state of operation of the humidifier.
	WtrProbeFail:	None	* (None, Capacitive, Resistive, Both)	Displays which one of the water level sensor's probes is currently not functioning properly.
Control	RoomDemand:	*Current value*	* (min: 0%, max: 100%)	Displays the room humidity demand value. **(Only appears if *ControlProfile* is set to an internal control mode.)**
	SupplyHLDemand:	*Current value*	* (min: 0%, max: 100%)	Displays the supply high limit humidity demand value. **(Only appears if *ModHLProfile* is set to an internal control mode.)**
	HumDemand:	*Current value*	* (min: 0%, max: 100%)	Displays the current humidity demand value.
Physical IO	AirFlow:	Closed	* (Closed, Open)	Displays the status of the airflow switch. If *Open* is displayed, it indicates that the airflow is not detected by the air pressure switch.
	SupplyHighLimit:	Closed	* (Closed, Open)	Displays the status of the high limit contact. If *Open* is displayed, it indicates that the humidity level has exceeded the setpoint on the high limit humidistat.
	Interlock:	Closed	* (Closed, Open)	Displays the status of the interlock. If *Open* is displayed, it indicates that the humidifier is stopped as a result of the interlock safety being open.
	BinExtDemand:	0%	* (0%, 100%)	Displays whether there is currently a humidity demand, when an On/Off humidifier is used. **(Only appears when using an On/Off humidifier.)**
	ControlInput:	*Current value*	* (min: 0%, max: 100%)	Displays the current control input reading.
	RoomRH:	*Current value*	* (min: 0%, max: 100%)	Displays the room humidity reading value.
	SupplyHLRH:	*Current value*	* (min: 0%, max: 100%)	Displays the supply high limit humidity reading value.
	WtrLeakDet:	Ok	* (Ok, Leak)	Displays whether a water leak has been detected. If *Leak* is displayed, it indicates that there is a leak within the water line.
	WtrLvlLow:	*Current value*	* (Inactive, Active)	Displays the status of the resistive low water level sensor.

Sub-Menu	Setting	Default	Range (** indicates no configuration; display only*)	Description/Notes
Physical IO	WtrLvlHigh:	*Current value*	* (Inactive, Active)	Displays the status of the resistive high water level sensor.
	WaterTemp:	*Current value*	* (min: 32.0°F, max: 257.0°F) * [min: 0.0°C, max: 125.0°C] Units: C, F	Displays the temperature of water in the evaporation chamber.
	FoamSensor:	NoFoam	* (NoFoam, Foam)	Displays whether foam has been detected within the evaporation chamber. If *Foam* is displayed, it indicates that the Anti-Foaming Energy Conservation (AFEC) system has detected foam. The humidifier will drain for a few minutes and return to normal operation.
	ThermalCutout:	Closed	* (Closed, Open)	Displays the status of the high temperature switch. If *Open* is displayed, it indicates that an abnormal temperature has been sensed.
	SSRTemp:	*Current value*	* (min: -4.0°F, max: 212.0°F) * [min: -20.0°C, max: 100.0°C] Units: C, F	Displays the temperature measured on the solid-state relay.
	CabinetTemp:	*Current value*	* (min: -4.0°F, max: 212.0°F) * [min: -20.0°C, max: 100.0°C] Units: C, F	Displays the temperature measured inside of the cabinet. **(Only appears for units with the weather proof enclosure.)**
	CurrentSensor1:	*Current value*	* (min: 0A, max: 150A)	Displays the measured electric current in the first current sensor. **(Only appears when using a current sensor.)**
	CurrentSensor2:	*Current value*	* (min: 0A, max: 150A)	Displays the measured electric current in the second current sensor. **(Only appears when using two current sensors.)**
	ContactorsFuse:	Normal	* (Normal. Blown Fuse)	Displays the current status of the PCB fuse. If *Blown Fuse* is displayed, the fuse must be replaced.
	PowerOutFdbck:	*Current value*	* (min: 0%, max: 100%)	Displays the feedback value of power output analog output.
	AlarmWarnRelay:	*Current value*	* (Off, On)	Displays the status of the alarm warning relay.
	ServiceWarnRelay:	*Current value*	* (Off, On)	Displays the status of the service warning relay.
	WtrLvlValve:	*Current value*	* (Off, On)	Displays the status of the water level sensor supply valve.
	TankWtrValve:	*Current value*	* (Off, On)	Displays the status of the evaporation chamber water supply valve.
	DrainCoolValve:	*Current value*	* (Off, On)	Displays the status of the internal drain cooler valve.
	DrainPump:	*Current value*	* (Off, On)	Displays the status of the drain pump.
	DrainValve:	*Current value*	* (Off, On)	Displays the status of the normally open drain valve. **(Only appears for units with the weather proof enclosure.)**
	MainContactor:	*Current value*	* (Off, On)	Displays the status of the main contactor.
	HeaterStage1:	*Current value*	* (Off, On)	Displays the status of the first stage contactor. **(Only appears based on humidifier model and configurations.)**
	HeaterStage2:	*Current value*	* (Off, On)	Displays the status of the second stage contactor. **(Only appears based on humidifier model and configurations.)**
	HeaterStage3:	*Current value*	* (Off, On)	Displays the status of the third stage contactor. **(Only appears based on humidifier model and configurations.)**
	SDUFan:	*Current value*	* (Off, On)	Displays the status of the SDU fan. **(Only appears for humidifiers having the SDU option.)**
	HeaterSSRStage:	*Current value*	* (min: 0%, max: 100%)	Displays the heater vernier stage output value.
	WaterLevel:	*Current value*	* (min: 0%, max: 120%)	Displays the percentage of water remaining in the evaporation chamber.
System	SysStatus:	Operational	* (Operational, Operational Read-Only, Download required, Download in progress, Non-operational, Backup in progress)	Displays the current system status.
	Vendor:	Neptronic	*	Displays the name of the vendor of the product. (Always Neptronic)
	Model:	-	*	Displays the humidifier model name.

Sub-Menu	Setting	Default	Range (** indicates no configuration; display only*)	Description/Notes
System	AppVersion:	3.01	*	Displays the current application software version.
	SerialNo:	-	*	Displays the serial number of the humidifier.
	Profile:	-	*	Displays a short profile for the configured device.
	MCULoad:	*Current value*	* (min: 0%, max: 100%)	Displays the current microcontroller load.
	MemoryLoad:	*Current value*	* (min: 0%, max: 100%)	Displays the current memory load.
	Runtime:	*Current value*	* (min: 0 sec, max: 999999999 sec)	Displays the number of seconds that the system has been powered on. This value is reset every time the system is shut off.
	ResetReason:	None	* (None, BOR, Pin, POR, Soft, IWDG, WWDG, LPWR, Unknown)	Displays the reason for the previous system reset: *None = No Reset; BOR = Brownout Reset; Pin = Pin Reset (using PCB Reset Button); POR = Power-on Reset; Soft = Software Reset; IWDG = Independent Watchdog;* *WWDG = Windowed Watchdog; LPWR = Low Power Reset; Unknown = Unknown Cause*

Menu - User Settings [Level 2 - Requires level 2 (or higher) password to access]

Sub-Menu	Setting		Default	Range	Description/Notes
Command	OccupSchedule:		-	00:00 Monday to Sunday Event 1 to Event 6	Create a customized occupancy schedule with up to six events per day.
Control	**RoomDemandLoop [3]**				**Only appears if *ControlProfile* is set to an internal control mode.**
		RoomRHStp:	40.0%	min: 0.0%, max: 100.0%	Define the room demand setpoint value used during *Occupied* state.
		RoomRHUnocStp:	30.0%	min: 0.0%, max: 100.0%	Define the room demand setpoint value used during *Unoccupied* state.
		RoomRHVacStp:	20.0%	min: 0.0%, max: 100.0%	Define the room demand setpoint value used during *Vacant* state.
	SupplyHLLoop [1]				**Only appears if *ModHLProfile* is set to an internal control mode.**
		SupplyHLStp:	80.0%	min: 0.0%, max: 100.0%	Define the supply high limit demand setpoint value.
System	UTCOffset:		-300min	min: -720min, max: 720min	Configure the value of the UTC offset.
	DaylightSavings:		No	No, Yes	Select whether to enable daylight savings or not.
	LocalDateTime:		YYYY-MM-DD 00:00:00		Configure the current date and time.
Interface	**LocalDisplay [5]**				
		BacklightLvl:	25%	min: 0%, max: 100%	Select the backlight level of the LCD screen.
		Contrast:	10%	min: 0%, max: 30%	Select the contrast level of the LCD screen.
		KeypadBuzzer:	Inactive	Inactive, Active	Select whether to enable or disable the key press sound.
		Language:	English	English, French, Spanish	Select the device language.
		Units:	Imperial	Metric, Imperial	Select whether to use a metric or imperial system of units for the local device.
	HRL [3]				**For units connected to the HRL24 controller.** **Only appears if *ControlProfile* is set to *HRL*.**
		Temperature:	*Current value*	* (min: -40.0°F, max: 500.0°F) * [min: -40.0°C, max: 260.0°C] Units: C, F	Displays the room temperature value measured by the HRL24 controller.
		TempBias:	0.00Δ°F [0.00Δ°C]	min: -18.00Δ°F, max: 18.00Δ°F [min: -10.00Δ°C, max: 10.00Δ°C] Units: Δ°C, Δ°F	Set the bias value for the temperature measured by the HRL24 controller.
		Humidity:	*Current value*	* (min: 0.0%, max: 100.0%)	Displays the room humidity value measured by the HRL24 controller.
		HumidityBias:	0.0%RH	min: -10.0%RH, max: 10.0%RH Units: %RH	Set the bias value for the humidity measured by the HRL24 controller.
		LockSetpnt:	Unlock	Unlock, Lock	Displays whether the setpoint obtained from the HRL24 controller can be modified or not.

Menu - Service [Level 3 - Requires level 3 (or higher) password to access]

Sub-Menu	Setting	Default	Range (** indicates no configuration; display only*)	Description/Notes
Status	RunTime:	0.00hr	*	Displays the total runtime of the unit.
	OnTime:	0.00hr	*	Displays the total operating time of the unit.
	ServRunTime:	0.00hr	*	Displays the runtime of the unit, since the last servicing.
	ServOnTime:	0.00hr	*	Displays the operating time of the unit, since the last servicing.
	ManCalibTime:	0.00hr	*	Displays the amount of time that has been elapsed since the last manual calibration of the water level sensor. **(Only appears if *WtrAutoCalib* is set to *Off*).**
	ServiceDue:	No	* (No, Yes)	Displays whether the humidifier is due for servicing.
Command	DrainSchedule:	-	00:00 Monday to Sunday Event 1 to Event 6	Create a customized draining schedule with up to six events per day.
	Request:	None	None, ResetAlarms, Drain, ResetCounters, Filling, WaterCalib	Perform one of the following actions for the humidifier: reset warning alarms, initiate a drain cycle, reset service counters, fill the evaporation chamber or calibrate the water level sensor.

Menu - Installation [Level 4 - Requires level 4 (or higher) password to access]

Sub-Menu	Setting		Default	Range (* indicates no configuration; display only)	Description/Notes
Import User Config					Import all the humidifier configuration values onto the SD card or USB device. A SD card or USB device must be inserted in order to import the values.
Export User Config					Export all the humidifier configuration values onto the SD card or USB device. A SD card or USB device must be inserted in order to export the values.
Quick Config	DrainInterval:		6hr	min: 0hr, max: 24hr	Set the frequency of the drain cycle. In general, a more frequent drain cycle is required as the water hardness level rises. The drain cycle setting does not affect the AFEC system.
	IdleTime:		24hr	min: 0hr, max: 72hr	Set the amount of time the humidifier can remain in standby mode until an automatic drain cycle is performed.
	BlowdownRate:		0%	min: 0%, max: 100%	Define the rate of boiler blowdown or water dilution, in order to minimize water impurities.
	ServInterval:		1000hr	min: 1000hr, max: 3000hr	Set the time of operation before the humidifier calls for servicing.
	ServOperation:		Allowed	Not Allowed, Allowed	Select whether to enable the unit to continue producing steam, even when it is due for servicing. When set to *Allowed*, the unit will continue operating even when a service alarm is active.
Control	ControlProfile:		ExternAnalog	ExternAnalog, ExternNetwork, InternHumAnalog, InternHumNetwork, HRL	Select a preconfigured control mode profile for the modulating humidity demand. **(Network option only applicable for BACnet/Modbus models.)**
	ModHLProfile:		Disabled	Disabled, ExternAnalog, ExternNetwork, InternAnalog, InternNetwork	Select a preconfigured control mode profile for the modulating high limit demand. **(Network option only applicable for BACnet/Modbus models.)**
	RoomDemandLoop [4]				**Only appears if *ControlProfile* is set to an internal control mode.**
		PropGain:	20.0	min: 1.0, max: 200.0	Set the value of the room demand proportional gain.
		IntgrlTime:	0.0sec	min: 0.0sec, max: 900.0sec	Set the value of the room demand integral time.
		DrvtveTime:	0.0sec	min: 0.0sec, max: 60.0sec	Set the value of the room demand derivative time.
		PropBand:	5.0%	min: 1.0%, max: 100.0%	Set the value of the room demand proportional band.
	SupplyHLLoop [4]				**Only appears if *ModHLProfile* is set to an internal control mode.**
		PropGain:	10.0	min: 1.0, max: 200.0	Set the value of the supply high limit demand proportional gain.
		IntgrlTime:	0.0sec	min: 0.0sec, max: 900.0sec	Set the value of the supply high limit demand integral time.
		DrvtveTime:	0.0sec	min: 0.0sec, max: 60.0sec	Set the value of the supply high limit demand derivative time.
		ProbBand:	10.0%	min: 1.0%, max: 100.0%	Set the value of the supply high limit demand proportional band.
	HumidityControl [3]				
		HumLowDeadBand:	1.00%	min: 0.00%, max: 100.00%	Set the lower limit deadband value for the humidity demand.
		NtwkTimeout:	900sec	min: 1sec, max: 900sec	Define the amount of time the humidifier may attempt to connect to the BACnet or Modbus network before it stops operating due to a communication error. **(Only appears if *ControlProfile or ModHLProfile* are set to *InternHumNetwork/InternNetwork* or *ExternNetwork*.)**
		BinDemandSrc:	None	None, BinaryExtDemand	Select the humidity control demand source for On/Off humidifiers.
Physical IO	**ControlInput [6]**				
		Signal:	0.000V	* (min: 0.000V, max: 15.000V)	Displays the value of the control demand analog input signal.

Sub-Menu	Setting		Default	Range (* *indicates no configuration; display only*)	Description/Notes
		ControlInput:	0.0%	* (min: 0.0%, max: 100.0%)	Displays the actual value of the control demand analog input.
		Min:	0.0%	min: 0.0%, max: 100.0%	Set the minimum value of the control demand analog input.
		Max:	100.0%	min: 0.0%, max: 100.0%	Set the maximum value of the control demand analog input.
		Bias:	0.0%	min: -10.0%, max: 10.0%	Set the bias value for the control demand analog input.
		SignalType:	0-10Vdc	0-10Vdc, 2-10Vdc, 4-20mA, 0-20mA	Select the signal type for the control demand analog input.
	RoomRH [7]				
		Signal:	0.000V	* (min: 0.000V, max: 15.000V	Displays the value of the room humidity analog input signal.
		RoomRH:	0.0%	* (min: 0.0%, max: 100.0%)	Displays the actual value of the room humidity analog input.
		Min:	0.0%	min: 0.0%, max: 100.0%	Set the minimum value of the room humidity analog input.
		Max:	100.0%	min: 0.0%, max: 100.0%	Set the maximum value of the room humidity analog input.
		Bias:	0.0%	min: -10.0%, max: 10.0%	Set the bias value for the room humidity analog input.
		AlwaysShow:	On	Off, On	Select whether to always display the *RoomRH* setting, regardless of the configuration selected in the *ControlProfile* setting.
		SignalType:	0-10Vdc	0-10Vdc, 2-10Vdc, 4-20mA, 0-20mA	Select the signal type for the room humidity analog input.
	SupplyHighLimRH [7]				
		Signal:	0.000V	* (min: 0.000V, max: 15.000V)	Displays the value of the duct or supply high limit humidity analog input signal.
		SupplyHLRH:	0.0%	* (min: 0.0%, max: 100.0%)	Displays the actual value of the duct or supply high limit humidity analog input.
		Min:	0.0%	min: 0.0%, max: 100.0%	Set the minimum value of the duct or supply high limit humidity analog input.
		Max:	0.0%	min: 0.0%, max: 100.0%	Set the maximum value of the duct or supply high limit humidity analog input.
		Bias:	0.0%	min: -10.0%, max: 10.0%	Set the bias value for the duct or supply high limit humidity analog input.
		AlwaysShow:	On	Off, On	Select whether to always display the *SupplyHLRH* setting, regardless of the configuration selected in the *ModHLProfile* setting.
		SignalType:	0-10Vdc	0-10Vdc, 2-10Vdc, 4-20mA, 0-20mA	Select the signal type for the duct or supply high limit humidity analog input.
	WtrLvlSig:		0Hz	* (min: 0Hz, max: 30000Hz)	Displays the value of the water level feedback signal.
	WtrLvlLowSig:		0.000V	* (min: 0.000V, max: 10.000V)	Displays the value of the resistive low water level sensor signal.
	WtrLvlHiSig:		0.000V	* (min: 0.000V, max: 10.000V)	Displays the value of the resistive high water level sensor signal.
	WaterTemp [3]				
		WtrTempSig:	0.000V	* (min: 0.000V, max: 10.000V)	Displays the value of the water temperature sensor signal.
		WaterTemp:	122.0°F [50.0°C]	* (min: 32.0°F, max: 257.0°F) * [min: 0.0°C, max: 125.0°C] Units: C, F	Displays the temperature of water in the evaporation chamber.
		WaterTempBias:	0.00Δ°F [0.00Δ°C]	min: -18.00Δ°F, max: 18.00Δ°F [min: -10.00Δ°C, max: 10.00Δ°C] Units: Δ°C, Δ°F	Set the bias value for the water temperature sensor.
	FoamSig:		0.000V	* (min: 0.000V, max: 10.000V)	Displays the value of the foam sensor signal.
	SSRTemp [3]				
		SSRTempSig:	0.000V	* (min: 0.000V, max: 10.000V)	Displays the value of the SSR temperature sensor signal.
Physical IO		SSRTemp:	32.0°F [0.0°C]	* (min: -4.0°F, max: 212.0°F) * [min: -20.0°C, max: 100.0°C] Units: C, F	Displays the temperature measured on the solid-state relay.

Sub-Menu	Setting		Default	Range (** indicates no configuration; display only*)	Description/Notes
		SSRTempBias:	0.00Δ°F [0.00Δ°C]	min: -18.00Δ°F, max: 18.00Δ°F [min: -10.00Δ°C, max: 10.00Δ°C] Units: Δ°C, Δ°F	Set the bias value for the SSR temperature sensor.
	CabinetTemp [3]				**Only appears for units with the weather proof enclosure.**
		CabTempSig:	0.000V	* (min: 0.000V, max: 10.000V)	Displays the value of the cabinet interior temperature sensor signal.
		CabinetTemp:	32.0°F [0.0°C]	* (min: -4.0°F, max: 212.0°F) * [min: -20.0°C, max: 100.0°C] Units: C, F	Displays the temperature measured inside of the cabinet.
		CabinetTempBias:	0.00Δ°F [0.00Δ°C]	min: -18.00Δ°F, max: 18.00Δ°F [min: -10.00Δ°C, max: 10.00Δ°C] Units: Δ°C, Δ°F	Set the bias value for the cabinet interior temperature sensor.
	SteamOutFdbck [5]				
		Signal:	0.000V	* (min: 0.000V, max: 10.000V)	Displays the value of the power output feedback signal.
		Bias:	0.000V	min: -1.000V, max: 1.000V	Set the bias value for the power output feedback signal.
		Min:	0.000V	min: 0.000V, max: 10.000V	Set the minimum value of the power output feedback signal.
		Max:	0.000V	min: 0.000V, max: 10.000V	Set the maximum value of the power output feedback signal.
		PowerOutFdbck:	0.00%	* (min: 0.00%, max: 100.00%)	Displays the value of the power output feedback.
	WaterProbe [4]				**Only appears if *WtrAutoCalib* is set to *Off*.**
		LowPosReading:	0Hz	* (min: 0Hz, max: 30000Hz)	Displays the low position value of the water level sensor.
		HighPosReading:	0Hz	* (min: 0Hz, max: 30000Hz)	Displays the high position value of the water level sensor.
		AbsLowPosReading:	0Hz	* (min: 0Hz, max: 30000Hz)	Displays the absolute low position value of the water level sensor.
		AbsHighPosReading:	0Hz	* (min: 0Hz, max: 30000Hz)	Displays the absolute high position value of the water level sensor.
System	ResetFactory:		No	No, Yes	Select *Yes* in order to reset the humidifier back to its original factory configuration settings. **WARNING: There is no way to recover previous configurations once the device has been reset.**
Extended Config	InstallationDate:		YYYY/MM/DD		Set the device installation date.
	AlarmBuzzer:		Disabled	Normal, Disabled	Select whether to enable or disable the alarm buzzer sound whenever there is a system warning. This will not affect the Status Display LED.
	SysLogLevel:		Debug	None, Emergency, Alert, Critical, Error, Warning, Notice, Info, Debug	Select the type of information to be stored on log file. **(The humidifier must be connected to an SD card.)**
	FanOffDelay:		5min	min: 5min, max: 20min	Set the delay time after which the SDU fan will close once it is no longer needed. **(Only appears if *FanTrgt* is set to *SDUFan*.)**
	FanTrgt:		None	None, SDUFan	Select whether to enable or disable the SDU option. If set to *None*, the SDU will not operate. **(Only applicable for humidifiers having the SDU option.)**
	MinSteamOut:		5%	min: 1%, max: 25%	Set the minimum steam production demand value, below which no steam will be produced.
	DrainInterval:		6hr	min: 0hr, max: 24hr	Set the frequency of the drain cycle. In general, a more frequent drain cycle is required as the water hardness level rises. The drain cycle setting does not affect the AFEC system.
	DrainVolume:		100%	min: 25%, max: 100%	Define the volume of water that is drained from the chamber, relative to the total capacity of the chamber.
Extended Config	MaxOutput:		100%	min: 0%, max: 100%	Set the maximum steam output of the humidifier relative to its total capacity. **(Only applicable for modulating humidifiers.)**

Sub-Menu	Setting	Default	Range (* *indicates no configuration; display only)*	Description/Notes
	IdleTime:	24hr	min: 0hr, max: 72hr	Set the amount of time the humidifier can remain in standby mode until an automatic drain cycle is performed.
	IdleTempStpnt:	32°F [0°C]	min: 32°F, max: 140°F [min: 0°C, max: 60°C] Units: C, F	Set the idle temperature setpoint value for the evaporation chamber when there is no demand.
	BlowdownRate:	0%	min: 0%, max: 100%	Define the rate of boiler blowdown or water dilution, in order to minimize water impurities.
	ServInterval:	1000hr	min: 1000hr, max: 3000hr	Set the time of operation before the humidifier calls for servicing.
	IdleRinseInterval:	3day	min: 1day, max: 7day	Set the amount of time the humidifier stays in “Idle” or “Off” mode, before the evaporation chamber undergoes an automatic rinse cycle.
	WtrLvlReplace:	7day	min: 0day, max: 7day	Set the amount of time the humidifier may run using only the resistive water level probes, if there is an issue with the capacitive probe, before an alarm message is displayed.
	ServOperation:	Allowed	Not Allowed, Allowed	Select whether to enable the unit to continue producing steam, even when it is due for servicing. When set to *Allowed*, the unit will continue operating even when a service alarm is active.
	LineRinse:	On	Off, On	Select whether to perform an automatic pipe line rinse cycle upon each start-up of the humidifier.
	IdleRinseOn:	Off	Off, On	Select whether to enable automatic rinse cycles while the humidifier is turned on and remains in “Idle” or stand-by mode. To select the amount of time the humidifier remains inactive before a rinse cycle is performed, configure the value of the *IdleRinseInterval* setting.
	IdleRinseOff:	Off	Off, On	Select whether to enable automatic rinse cycles while the humidifier is turned off and remains inactive. To select the amount of time the humidifier remains inactive before a rinse cycle is performed, configure the value of the *IdleRinseInterval* setting.
	WtrAutoCalib:	On	Off, On	Select whether to enable or disable the automatic calibration of the water level sensor.
	StartupRinse:	Off	Off, On	Select whether to perform an automatic tank rinse cycle upon each start-up of the humidifier.
	CleanValveDelay:	50%	min: 0%, max: 80%	Set the value of the proportion of the total drain duration the clean valve will be open.

Menu - Integration [Level 5 - Requires level 5 password to access]

Sub-Menu	Setting		Default	Range (* indicates no configuration; display only)	Description/Notes
Network	NtwrkOption:		BACnet	BACnet, Modbus	Select whether to connect to a BACnet MS/TP or Modbus RTU communication interface on terminal TB2 of the humidifier PCB.
	Device [4]				
		DeviceName:	-		Establish a name for the device.
		Location:	-		Establish a designated location for the unit.
		Description:	-		Establish a brief description for the unit.
		DeviceInstance:	0153001 (0x000255a9)		Define the device instance value.
	HTTPServer [1]				
		HttpServerUnits:	Imperial	Metric, Imperial	Select whether to use a metric or imperial system of units for the web server.
	BACnetServer [3]				**For models connected to the BACnet network.**
		Language:	English	English, French, Spanish	Select the language for the BACnet server.
		ListMode:	Integrator	Integrator, Advanced, Factory	Select the category of BACnet objects to display.
		Units:	Imperial	Metric, Imperial	Select whether to use a metric or imperial system of units for the BACnet server.
	BACnetMSTP [10]				**Only appears if *NtwrkOption* is set to *BACnet*.**
		MaxMaster:	127	min: 1, max: 127	Configure MaxMaster value to increase network efficiency when there are less than 127 devices on the network. For optimal efficiency, set value to the highest MAC address in the MS/TP network.
		MaxInfoFrames:	1	min: 1, max: 100	Configure the maximum number of information messages the controller may transmit, before it must pass the token to the next controller.
		AutoBaud:	Yes	No, Yes	Enable or disable automatic baud rate detection.
		BaudRate:	38400	9600, 19200, 38400, 76800	Select the baud rate for data transfer.
		MAC:	001		Set the MS/TP network MAC address.
		RxValid:	0	*	Displays information on the received communication frames for troubleshooting purposes.
		RxInvalid:	0	*	
		RxLost:	0	*	
		Tx:	0	*	Displays information on the transmitted communication frames for troubleshooting purposes.
		TxLost:	0	*	
	BACnetIP [6]				**For models connected to BACnet IP.**
		RxValid:	0	*	Displays information on the received communication frames for troubleshooting purposes.
		RxInvalid:	0	*	
		RxLost:	0	*	
		Tx:	0	*	Displays information on the transmitted communication frames for troubleshooting purposes.
		TxLost:	0	*	
		BACnetIPPort:	47808	min: 0, max: 65535	Set the User Datagram Protocol (UDP) port number. BACnet port number is set by default.

Sub-Menu	Setting		Default	Range (* *indicates no configuration; display only)*	Description/Notes
Network	**ModbusServer [1]**				**For models connected to Modbus.**
		Units:	Imperial	Metric, Imperial	Select whether to use a metric or imperial system of units for the Modbus server.
	ModbusRTU1In [4]				**Only appears if *NtwrkOption* is set to *Modbus*.**
		MAC:	1	min: 1, max: 247	Set the Modbus MAC address.
		Autobaud:	Yes	No, Yes	Enable or disable automatic baud rate detection.
		PortConfig:	No Parity, 2 Stop Bits	No Parity, 2 Stop Bits Even Parity, 1 Stop bit Odd Parity, 1 Stop bit	Select the Modbus communication port configuration.
		BaudRate:	19200	9600, 14400, 19200, 38400, 57600	Select the baud rate for data transfer.
	BACnetETH [5]				**For models connected to BACnet Ethernet.**
		RxValid:	0	*	Displays information on the received communication frames for troubleshooting purposes.
		RxInvalid:	0	*	
		RxLost:	0	*	
		Tx:	0	*	Displays information on the transmitted communication frames for troubleshooting purposes.
		TxLost:	0	*	
	ModbusTCPIP0In [2]				**For models connected to Modbus TCP/IP.**
		KeepAliveTimeOut:	5min	min: 1min, max: 1440min	Set the amount of time the communication stays open before connection is cut out, when no signal is received from the device.
		ListeningPort:	502	min: 0, max: 65535	Set the communication port number. Modbus TCP port number is set by default.
	SMTP [7]				
		SSL:	Off	Off, On	If turned to *On*, a secure socket layer will be used to encrypt the communication between the device and the email server (Port value must be set to *587* and *Username* and *Password* settings must be filled out). If turned to *Off*, the default socket will be used (use Port *25* to use server without login account or Port *587* if login details for email account have been entered).
		Port:	25	25, 587	If set to *25*, server to server email transfer is enabled (can only be used if SSL is set to *Off)*. If set to *587*, client to server email transfer is enabled.
		ServerAddr:	192.168.100.100		Configure the server IP address for the email account.
		From:	*Current value*		Set the email address that will be sending the humidifier notification messages.
		To:	*Current value*		Set the email address that will be receiving the humidifier notification messages.
		Username:	*Current value*		Set the login username for the email account.
		Password:	*Current value*		Set the login password for the email account.
	Notify [3]				
		Alarm:	Off	Off, On	If turned to *On*, then the humidifier alarm messages will be sent to the email configured in the *SMTP* sub-menu.
		Warning:	Off	Off, On	If turned to *On*, then the humidifier warning messages will be sent to the email configured in the *SMTP* sub-menu.
		AppMsg:	Off	Off, On	If turned to *On*, then the humidifier event messages will be sent to the email configured in the *SMTP* sub-menu.

Sub-Menu	Setting		Default	Range (** indicates no configuration; display only*)	Description/Notes
Communication	**IPSettings [10]**				
		DHCP:	Inactive	Inactive, Active	Select whether to enable Dynamic Host Configuration Protocol (DHCP) to automatically provide an IP address.
		RstIPSetting:	No	No, Yes	Select whether to restart the IP module, in order to allow recent parameter modifications to be effective.
		StaticAddress:	192.168.1.100		Configure the static IP address.
		StaticSubnetMask:	255.255.255.0		Configure the static subnet mask.
		StaticDefaultGateway:	192.168.0.100		Configure the static default gateway.
		StaticDnsServer:	192.168.10.50		Configure the static DNS server.
		ActualAddress:	*Current value*	*	Displays the actual IP address.
		ActualSubnetMask:	*Current value*	*	Displays the actual subnet mask.
		ActualDefaultGateway:	*Current value*	*	Displays the actual default gateway.
		ActualDnsServer:	*Current value*	*	Displays the actual DNS server.
	ETHSettings [1]				
		EthernetMacAdd:	*Current value*	*	Displays the MAC address of the Ethernet interface. **(Only applicable if using an Ethernet connection.)**

List of Alarms

Table 22 - List of Alarms

Display	Description	Alarm Reset
AirFlow	Indicates that the airflow sensor is open. This fault does not trigger the alarm contact (no message will be displayed), but will prevent the humidifier from running. Verify that the signal from the airflow sensor is present at the controller's input on the PCB and verify wiring.	Automatic
SupplyHighLimit	Indicates that the high limit item is open. Verify that the signal from the supply high limit sensor is present at the controller's input on the PCB and verify wiring.	Automatic
Interlock	Indicates that the interlock and the cut-out circuitry are open. This fault does not trigger the alarm contact (no message will be displayed), but will prevent the humidifier from running. Verify that the signal from the interlock sensor is present at the controller's input on the PCB and verify wiring.	Automatic
HighLimitCutout	Indicates that the high limit cutout has been activated due to a humidity reading that exceeds the high limit setpoint. Ensure that the high limit humidistat is operating correctly and that the distance between the sensor and the steam dispersion manifold is sufficient (15 ft [4.6 m]).	Automatic
ThermalCutout	Indicates that the thermal cutout sensor is open. Verify that the signal from the thermal cutout sensor is present at the controller's input on the PCB and verify wiring. If that the high temperature switch has been activated due to an abnormal temperature reading, ensure that the humidifier is not operating below standard water level and verify the operation of the water level sensor.	Automatic
WaterTemp	Indicates that the evaporation chamber water temperature sensor is defective or incorrectly wired. Check sensor and verify wiring.	Automatic
FoamSensor	Indicates that the foam cutout sensor is defective or incorrectly wired. Check sensor and verify wiring.	Automatic
SSRTemp	Indicates that the solid-state relay temperature sensor is defective or incorrectly wired. Check sensor and verify wiring.	Automatic
CabinetTemp	Indicates that the cabinet temperature sensor is defective or incorrectly wired. Check sensor and verify wiring. (Only applicable for humidifiers having the weatherproof option.)	Automatic
ContactorsFuse	Indicates that there is an issue with the printed circuit board fuse. Check the status of the fuse and replace it if defective.	Automatic
FanFault	Indicates that there is a problem with the SDU fan. Verify the signal and the operation of the SDU fan. (Only applicable for humidifiers having the SDU option.)	Automatic
MemoryCard *(Warning)*	Indicates that the SD card has been detected, but it is not operating correctly or is non-functional. Verify the SD card and replace if defective.	Automatic
USB Device *(Warning)*	Indicates that the USB device has been detected, but it could not be read or is not operating correctly. Verify the functionality of the USB device and replace if defective.	Automatic
Foam *(Warning)*	If *Detected* is displayed, it indicates that the foam sensor has detected foam and the humidifier is now draining. Once the drain cycle has ended, the warning message will disappear.	Automatic
ManWtrCalib *(Warning)*	Indicates that the water level sensor must be manually calibrated. See Manual Water Level Calibration section on page 69 for details. (Only applicable if *WtrAutoCalib* is set to *Off*.)	Automatic
WaterLevel *(Warning)*	If *Replace* is displayed, it indicates that there a problem with either the capacitive or resistive water level probes. Ensure that all the water level probes have been wired properly. If the error persists, the warning message will change into the alarm message described below.	Manual *
WaterLevel *(Alarm)*	If *Defect* is displayed, it indicates that the water level sensor is defective or not working properly. Verify its operation and replace it if necessary. If the sensor is replaced, the humidifier will need to be turned on while there is a humidity demand in order to recalibrate the water level sensor. If *NoCalib* is displayed, it indicates that the water level sensor is not calibrated or must be recalibrated. Ensure that *WtrAutoCalib* is set to *On* for automatic calibration. If *WtrAutoCalib* has been changed to *Off*, ensure that the water level sensor has been manually calibrated.	Manual *
FailedPump	Indicates that there was an error during draining due to a pump failure. Verify that the drain pump is operating correctly and that it is not being hindered or obstructed.	Manual *
FillTimeout	Indicates that the water level sensor has not reached the desired value within the programmed delay. Verify and remove any obstructions in the water inlet line and verify that the shut-off valve is not closed.	Manual *
BlockedPiping	Indicates that there was an error during draining due to a blockage in the pipes. Verify and remove any obstructions in the piping and ensure that the drain outlet is not clogged.	Manual *
HeatTimeout	Indicates that the water temperature in the evaporation chamber has not reached the boiling point within the programmed delay. Verify the temperature of the supply water.	Manual *
Overheat	Indicates that the evaporation chamber temperature sensor has detected a temperature reading greater than or equal to 221°F (105°C). Verify the operation of the water level sensor and ensure that the water supply piping is not obstructed.	Manual *
WaterLeak	Indicates that a water leak has been detected. Verify the water line for signs of leaks and ensure that all piping and water connections have been properly installed and secured.	Manual *
TankBlocked	Indicates that there was an error while filling the evaporation chamber due to a blockage in the pipes. Verify and remove any obstructions in the piping and ensure that the water inlet is not clogged.	Manual *

Display	Description	Alarm Reset
RefillDelay	Indicates that the evaporation chamber has not been refilled with more water within the programmed delay after it has begun evaporating, due to a blockage in the pipes. Verify and remove any obstructions in the piping and ensure that the water inlet is not clogged.	Manual *
NtwkCtrlSt	Indicates that the communication attempt to the BMS server has exceeded the delay defined by the *NtwkTimeout* setting. Verify the wiring between the humidifier and the BACnet or Modbus network and ensure proper connection. (Only applicable for humidifiers having the BACnet or Modbus option).	Manual *
HRLState	Indicates that there is a communication error when attempting to connect to the HRL24 controller. Verify the wiring between the humidifier and the HRL24 and ensure that the controller is functioning properly. (Only applicable for humidifiers connected to the HRL24 controller).	Manual *
AntiFreeze	If *Drain* is displayed, it indicates that the drain valve is open, and the unit will empty itself to avoid freezing. This ensures that the unit will produce steam normally when it will be switched ON by a demand.	Manual *
ServiceDue	Indicates that the due date for servicing the evaporation chamber has arrived. See Service section on page 73 for details.	Manual **
Update Device *(Warning)*	The update file is for another device.	Redownload proper update file and launch new update
Update CRC *(Warning)*	The update file is corrupted.	Redownload proper update file and launch new update
Update Fail *(Warning)*	The update was unsuccessful.	Relaunch update
Memory Fail *(Warning)*	There is a problem with the existing configuration. Either the new configuration will not be saved, or some existing configurations will not be loaded.	Change PCB

* Use *Reset Alarms* function in *Request* setting (see page 59).
** Use *Reset Counters* function in *Request* setting (see page 59).

Manual Water Level Calibration

If the humidifier is not equipped with the pure DI humidifier option and uses ultrapure water, the water level sensor must be manually calibrated to obtain a more accurate sensor reading. To turn off the automatic calibration of the water level sensor, access the *WtrAutoCalib* setting located in the *Extended Config* sub-menu of the *Installation* menu and set its value to *Off.* Once this is done, the water level sensor will need to be manually calibrated by using the following steps:

1. To view the water level sensor, remove the plumbing compartment access panel on the left side of the humidifier (for SKE4-N02 to N60 models) or the front access panel (for SKE4-N30X to N100 models).
2. To begin the manual water level calibration process, access the *Request* setting located in the *Command* sub-menu of the *Service* menu, and set its value to *WaterCalib*.

Step 1. The water level sensor will then initiate a drain cycle. Wait until it has finished draining. The draining process can be stopped at any time by pressing and holding Enter ✔ for 3 seconds

Step 2. Verify that no water remains in the water level sensor and press and hold Enter ✔ for 3 seconds to proceed. If the water has not been drained completely, open the manual drain valve to remove the remaining water.

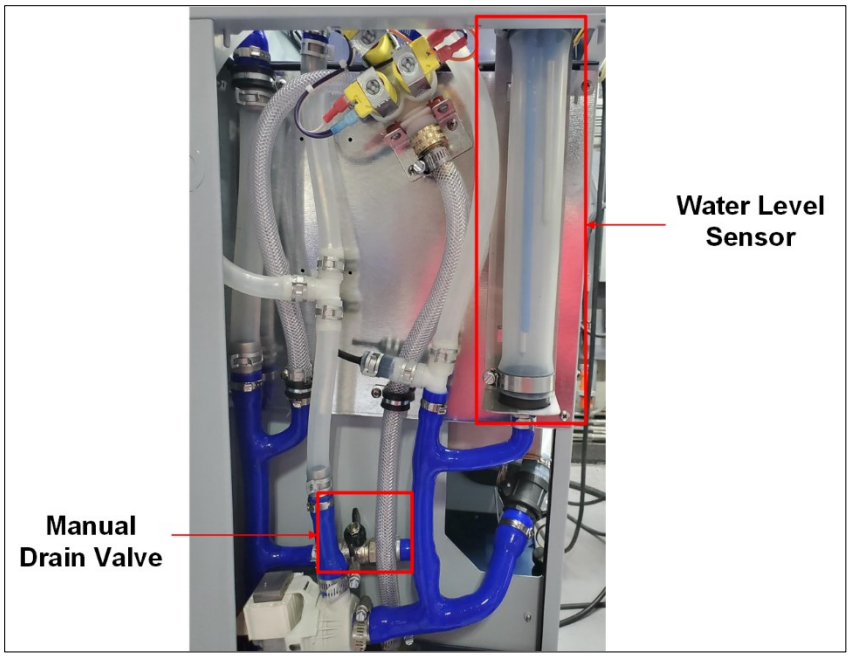

Step 3. The water level sensor will then start filling until it reaches the resistive low probe. The automatic filling process can be stopped at any time by pressing and holding Enter ✔ for 3 seconds.

Step 4. Once the *Low level* message appears on the controller, verify that the water has reached the resistive low water level probe.

- If the water has not reached the resistive low water level probe, use the **+** button to resume filling.
- If the water level sensor has been overfilled, open the manual drain valve to remove the additional water.
- Once the water has reached the resistive low probe, press and hold Enter ✔ for 3 seconds to proceed.

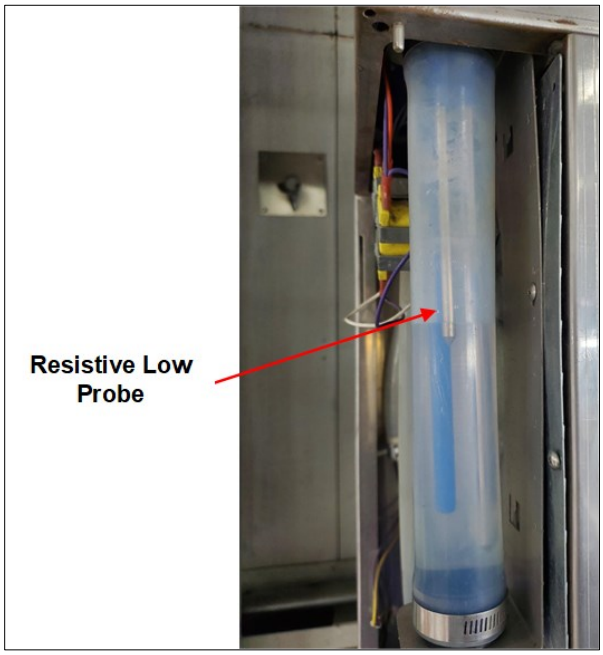

Step 5. The water level sensor will then start filling until it reaches the resistive high probe. The automatic filling process can be stopped at any time by pressing and holding Enter ✔ for 3 seconds.

Step 6. Once the *High level* message appears on the controller, verify that the water has reached the resistive high water level probe.

- If the water has not reached the resistive high water level probe, use the **+** button to resume filling.
- If the water level sensor has been overfilled, open the manual drain valve to remove the additional water.
- Once the water has reached the resistive high probe, press and hold Enter ✔ for 3 seconds to proceed.

3. The manual water level calibration process is now complete.

Start-up Procedure

Initial verification and start-up must be carried out by suitably qualified personnel.

It is strictly recommended to follow this start-up procedure to avoid any anomaly resulting from inaccurate installation of the components. In case of any problems or discrepancies, consult the Troubleshooting section (see page 78).

Initial Verification

Clearance	1. Ensure that the humidifier cabinet is installed in a location in which the humidifier can be serviced correctly.	☐
Electrical Supply	2. Verify that the power supply (voltage) conforms to the appliance name plate on the side of the humidifier.	☐
	3. Confirm that 24Vac is present between terminals TB4 1&2 on the printed circuit board.	☐
Water Supply	4. Ensure that water is supplied to the humidifier and that a shutoff valve is placed outside the humidifier.	☐
	5. With the water shutoff valve turned on, check that the drain connections are connected to the main drain line with sufficient diameter. Ensure that there are no apparent leaks.	☐
	6. Confirm that the drain piping is properly connected with a pitch of at least ¼" (6.5mm) per foot (300mm) horizontal run.	☐
Steam	7. Verify that the steam distributors are properly installed into the ventilation duct or that the SDU is properly installed and connected to the humidifier.	☐
	8. Verify that the flexible steam hoses and rigid steam supply pipes are shorter than 16 ft (5 m) in total, are properly sloped and have condensation "S" traps wherever required.	☐
Controls	9. Ensure that the Airflow switch is properly installed and connected to the printed circuit board. If an Airflow switch is not used, verify that a jumper is connected between terminals TB3 1&2.	☐
	10. Ensure that the High limit duct humidistat is properly installed and connected to the printed circuit board. Verify that the setpoint is properly adjusted. If a High limit duct humidistat is not used, verify that a jumper is connected between terminals TB3 1&3.	☐
	11. Ensure that the Interlock is properly connected to the printed circuit board. If the Interlock is not used, verify that a jumper is connected between terminals TB3 1&4.	☐
	12. If a room or duct humidistat is used, verify that it is correctly installed and properly connected to the humidifier. Verify that the setpoints are properly adjusted.	☐
	13. Turn the power on using the disconnect switch or circuit breaker.	☐
	14. Confirm the control set-up of the humidifier and verify that the setpoints are properly adjusted.	☐

Start-Up

Start-up	1. Proceed to start-up the humidifier, as follows:	
	a) With the humidifier front access open, ensure that the manual drain valve is closed.	☐
	b) Turn on the humidifier by pressing and holding the Power button for 3 seconds. Verify that the controller Status Display LED is blue.	☐
	c) Verify that there is a humidity demand displayed on the LCD screen of the humidifier.	☐
	d) Ensure that the water supply valve connected to the humidifier is turned on and that water is flowing directly to the humidifier water supply inlet. Ensure that the water shut off valve is turned off.	☐
	e) Verify the water level as water is filling the evaporation chamber by using the control panel to access the *WaterLevel* setting located in the *Physical IO* sub-menu of the *General* menu. Ensure that there are no water leaks along the water line.	☐
	f) Once the evaporation chamber has been filled, observe the system for water and steam leaks during several minutes of operation.	☐
Safety Test	2. Check the location of the Airflow switch in the system and its operation by stopping the fan. With no air movement, the humidifier should automatically stop.	☐
Drain and Reset	3. Turn off the humidifier by pressing and holding the Power button for 3 seconds.	☐
	4. Conduct a drain cycle by pressing and holding the Drain button for 3 seconds. Ensure that the evaporation chamber has been emptied.	☐
	5. Once the drain cycle is complete, restart the humidifier by pressing and holding the Power button for 3 seconds.	☐
	6. Reset the Airflow switch if needed.	☐
End	7. The humidifier is now ready for normal operation.	☐

Service

WARNING: Danger of hot water. Drain water before servicing.

The humidifier requires regular periodic service to ensure efficient and trouble-free running. Regular service involves cleaning the evaporation chamber and its components manually. Generally, frequency of cleaning can range from two months to once a year, depending on the following factors:

- Quality of water
- Frequency of automatic drain cycles
- Demand placed on the humidifier

All SKE4 humidifiers are programmed for 1000 hours of operation. This is a default factory setting.
To view the number of hours the humidifier has run and the number of service hours, use the control panel to access the *Service* Menu (see page 59 for more details).

After 1000 hours of operation have passed, the Status Display LED on the control panel will turn red, indicating that the humidifier is due for servicing. Although the humidifier will continue to operate, it is imperative that service is performed as soon as possible, in order to ensure proper functionality.

Cleaning the Evaporation Chamber

Cleaning the evaporation chamber involves the following steps:

Stage 1 - Drain the Evaporation Chamber

Stage 2 - Shut Down the Electrical Supply

Stage 3 - Remove Additional Water Residue

Stage 4 - Remove and Clean the Evaporation Chamber

Stage 5 - Reinstall the Evaporation Chamber

Stage 6 - Restart the Humidifier

Stage 1 - Drain the Evaporation Chamber

Before commencing the cleaning procedure, ensure that the evaporation chamber is cool and comfortable enough to handle, as the evaporation chamber and its contents can be extremely hot and can cause burning. To allow the evaporation chamber to cool, initiate a drain cycle:

1. Press and hold the Power button for 3 seconds to switch off the humidifier.
2. Press and hold the Drain button for 3 seconds to initiate a drain cycle and empty the evaporation chamber.
3. Once the initial drain cycle is complete, a second drain cycle must be performed to cool down the chamber. Press and hold the Power button for 3 seconds to turn on the humidifier and refill the evaporation chamber with water.
4. Once the chamber has been filled, press and hold the Drain button once again for 3 seconds to empty the chamber.

At the end of the second drain cycle, check the temperature of the evaporation chamber. To check the temperature, open the front door of the humidifier and touch the chamber with the back of your hand. If necessary, repeat the above steps until the chamber is cool enough to handle.

Stage 2 - Shut Down the Electrical Supply

CAUTION: Risk of electric shock. The electric supply of the humidifier must be shut down. Disconnect the power at the External Breaker/Fused Disconnect before commencing servicing.

Once the evaporation chamber is sufficiently cool, remove the power supply to the humidifier at the disconnect switch or the breaker.

Stage 3 - Remove Additional Water Residue

1. Remove the plumbing compartment access panel and turn on the manual drain valve, in order to remove any water residue remaining in the silicone piping.

2. Uncouple the clamp connectors to let the evaporation chamber hang down, in order to remove the additional water.

3. Once the additional water has stopped flowing down the evaporation chamber, recouple the clamp connectors to reconnect the chamber.

Stage 4 - Remove and Clean the Evaporation Chamber

Disconnect the water inlet.

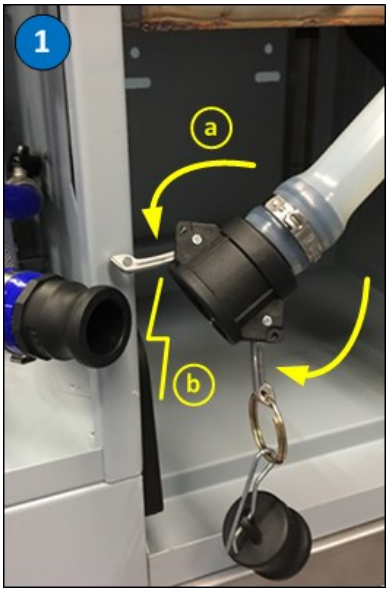

Uncouple the clamp connectors.

Slightly lift the chamber upwards.

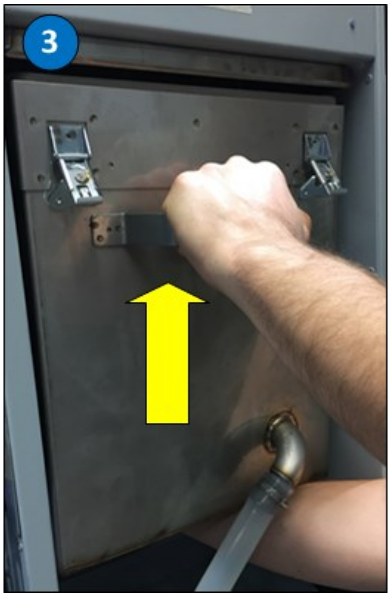

Pull the chamber towards you.

Slide the chamber down.

Begin cleaning the chamber.

1. With the front access door removed, disconnect the water inlet attached to the front of the evaporation chamber, by removing the safety pins and manually disconnecting the hose shank coupling from the plumbing section of the humidifier. Connect and secure the water plug to the inlet in order to prevent water from leaking out from the evaporation chamber.

2. Uncouple the clamp connectors.

Model	Method
SKE4-N02 to SKE4-N30	Turn the two latches located around the evaporation chamber.
SKE4-N20L to SKE4-N60	Turn the three latches located around the evaporation chamber.
SKE4-N30X to SKE4-N100	Disengage the latch and remove the band clamp located around the evaporation chamber.

(***For models SKE4-N30X to N100, skip ahead to step 5.***)

3. Once the clamps have been uncoupled, the tank will hang loose on the hooks located behind the chamber. While the chamber is tilted, slightly lift the evaporation chamber upwards, by raising it from the bottom with one hand, and holding onto the handle with the other.

4. Pull the evaporation chamber towards you using the handle, until it is fully removed from the back hooks.

Complete motion performed to remove the back of the chamber from the hooks.

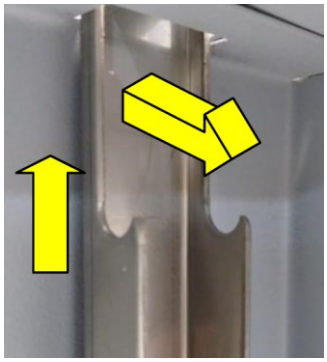

5. Slide the evaporation chamber down using the rail-guided engagement system.

6. Let the evaporation chamber hang at the edge of the rail-guided system **(only for models SKE4-N10 to N60)** or remove the chamber in order to begin cleaning.

The evaporation chamber will still contain a few inches of water. Ensure that your footing is secure when removing the chamber. Take extra precautions when removing the evaporation chamber from large humidifiers, which may feel heavy when being pulled down.

7. Clean the evaporation chamber:
   - Remove the residue that has accumulated inside the chamber.
   - To clean out the remaining scale from the container, use a stiff brush (synthetic filament only) and some vinegar or any weak acid suitable for cleaning stainless steel. Ensure that the cleaning product **DOES NOT** contain chloride in it.

WARNING: The use of a wire brush or any non-recommended acid will void the warranty.

   - Do not scrape off the walls of the chamber.
   - Ensure that the water inlet aperture is not blocked.

The heating elements are self-cleaning. Any mineral accumulation breaks off and falls to the bottom during operation.

8. At the end of the maintenance procedure, replace the previous gasket attached to the top of the evaporation chamber with a new one.

Contact your local Neptronic representative to order a new gasket. Refer to item 3 of the Bill of Material section for the appropriate part number.

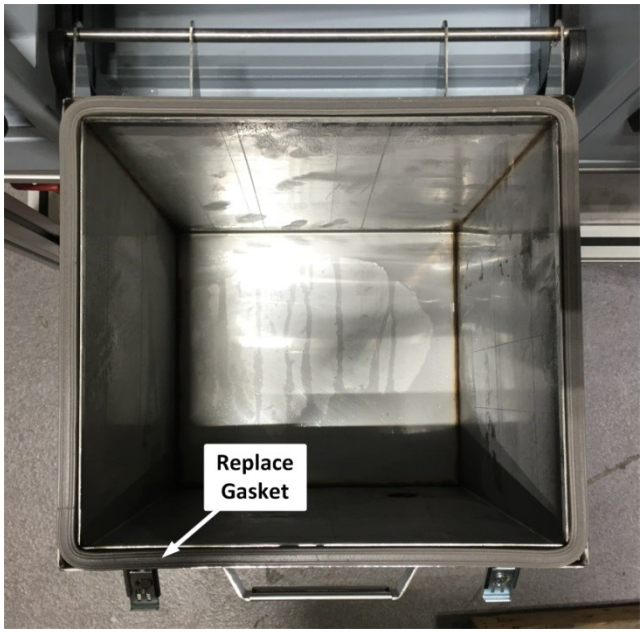

Stage 5 - Reinstall the Evaporation Chamber

1. Slide the evaporation chamber back up the rail-guided engagement system until it is secured back on top.
2. Recouple the clamp connectors.
3. Disconnect the water plug and reconnect the water inlet to the evaporation chamber.
4. Turn off the manual drain valve.
5. Turn the power back on at the disconnect switch or the breaker.

Stage 6 - Restart the Humidifier

1. Press and hold the Power button for 3 seconds to power on the humidifier.
2. Conduct a performance test by verifying the water level of the evaporation chamber as it is filled with water. Verify that there are no leaks.
3. Conduct a drain test by turning off the humidifier using the Power button and performing a drain cycle using the Drain button .
4. Restart the humidifier to resume normal operation by pressing and holding the Power button for 3 seconds.
5. To reset the service counters and clear the alarm warning after servicing:
   a. Using the control panel, access the *Request* setting located in the *Command* sub-menu of the *Service* menu.
   b. Select the *Reset Counters* value and press Enter ✔ to reset the service counters.
6. Ensure that the drain cycles are set for every 6 hours of operation. This is the factory default setting and is recommended for city water.
   - To configure the drain cycle frequency, use the control panel to access the *DrainInterval* setting located in the *Quick Config or Extended Config* sub-menus of the *Installation* menu.

   After the water boils for 6 hours in the chamber, it is laden with minerals and solutions. This affects the humidity output and the efficiency of the humidifier. Diluting the boiling water with a drain cycle will improve the performance of the humidifier.

Troubleshooting

Table 23 - Troubleshooting Guide

Problem	Possible Cause	Corrective Action
Humidifier does not operate (Screen turned Off)	Power is not being supplied to the humidifier.	Check the main power supply and fuses. Verify the disconnect switch and the circuit breaker.
	The low voltage fuse is open.	Check the transformer and the low voltage fuse. Verify that the low voltage circuit is complete.
	Wire harnesses inside the humidifier are not secured properly.	Check the wires harnesses and the main PC board. Verify that all connections have been made properly.
*Humidifier does not operate (Screen turned On, **Status Display LED: Off**)*	The humidifier is not powered on.	Verify that the Power button has been pressed and held for 3 seconds for correct activation.
Humidifier does not produce steam (No demand)	For modulating humidifier: No analog signal detected.	Verify the setting of the control input.
	For On/Off humidifier: No demand from humidistat.	Verify the setting of the humidistat.
	Air flow is not detected by air pressure switch.	Check the fan operation.
	High limit humidistat is open.	Check the operation of the high limit humidistat.
	Interlock contact is open.	Check the interlock contact.
	Control wires are not properly secured to the terminal blocks.	Verify the connections of the wires to the control terminal blocks.
No water inside the evaporation chamber or Humidifier does not stop draining	Humidifier is being filled with water but has not yet reached or does not reach the high limit of the water level sensor.	- Verify that the drain valve is open. - Check if the shutoff valve on the water supply line is open. - Verify the operation of the fill valve. - Check that the fill valve strainer and the external strainer are not blocked.
	Humidifier is not being filled with water.	
Humidifier does not drain	Drain valve is clogged.	Check the drain valve.
	During a drain or foaming cycle, the water level sensor has sensed that the water level has not decreased.	Verify that the drain pump, the fill and drain water pipe connections and the water level sensor chamber are not obstructed.
*Humidifier is always on Foam cycle (**FoamSensor** setting displays **Foam**)*	Excessive foaming condition inside the evaporation chamber.	- Verify the quality of the supply water. - Verify if chemical products were used to clean the evaporation chamber during maintenance. Rinse the chamber properly with water. - Check the setting of the drain cycle. Reduce the time between drain cycles.
*Humidifier is operating and the Status Display LED is Red (**ServiceDue** setting displays **On**)*	The humidifier is due for servicing.	Service the evaporation chamber (see Service section on page 73). Use *Request* setting in *Service* menu to reset counters (see page 59).
*Humidifier is not operating and the Status Display LED is Red (**ThermalCutout** setting displays **Open**)*	The high temperature switch has sensed abnormal temperature.	Verify if the humidifier was operating below the standard water level. Replace water level sensor if necessary.
*Humidifier does not operate (Screen turned Off, **Status Display LED: Blue**)*	The following components can be the cause of this problem: water level sensor, PC board or LCD display.	Call factory for troubleshooting instructions.
*Humidifier is producing steam (Screen turned Off, **Status Display LED: Blue**)*	The display FFC cable is not connected properly.	Verify that the connections of the FFC cable are properly secured and are on the correct side.
	The LCD display is defective.	Replace the LCD display.

Exploded View and Bill of Material

Exploded View

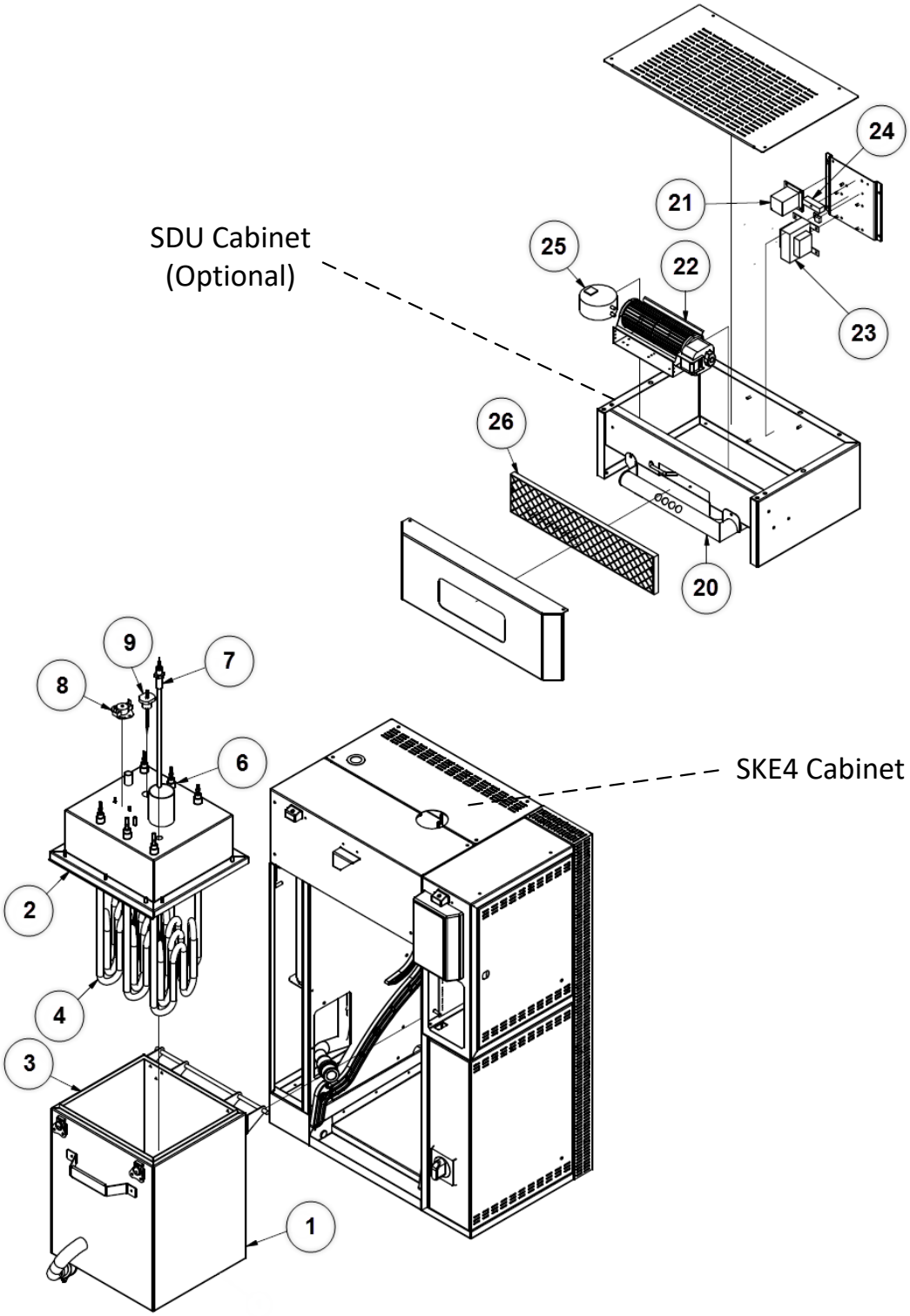

Illustration 53 - Exploded View Part 1

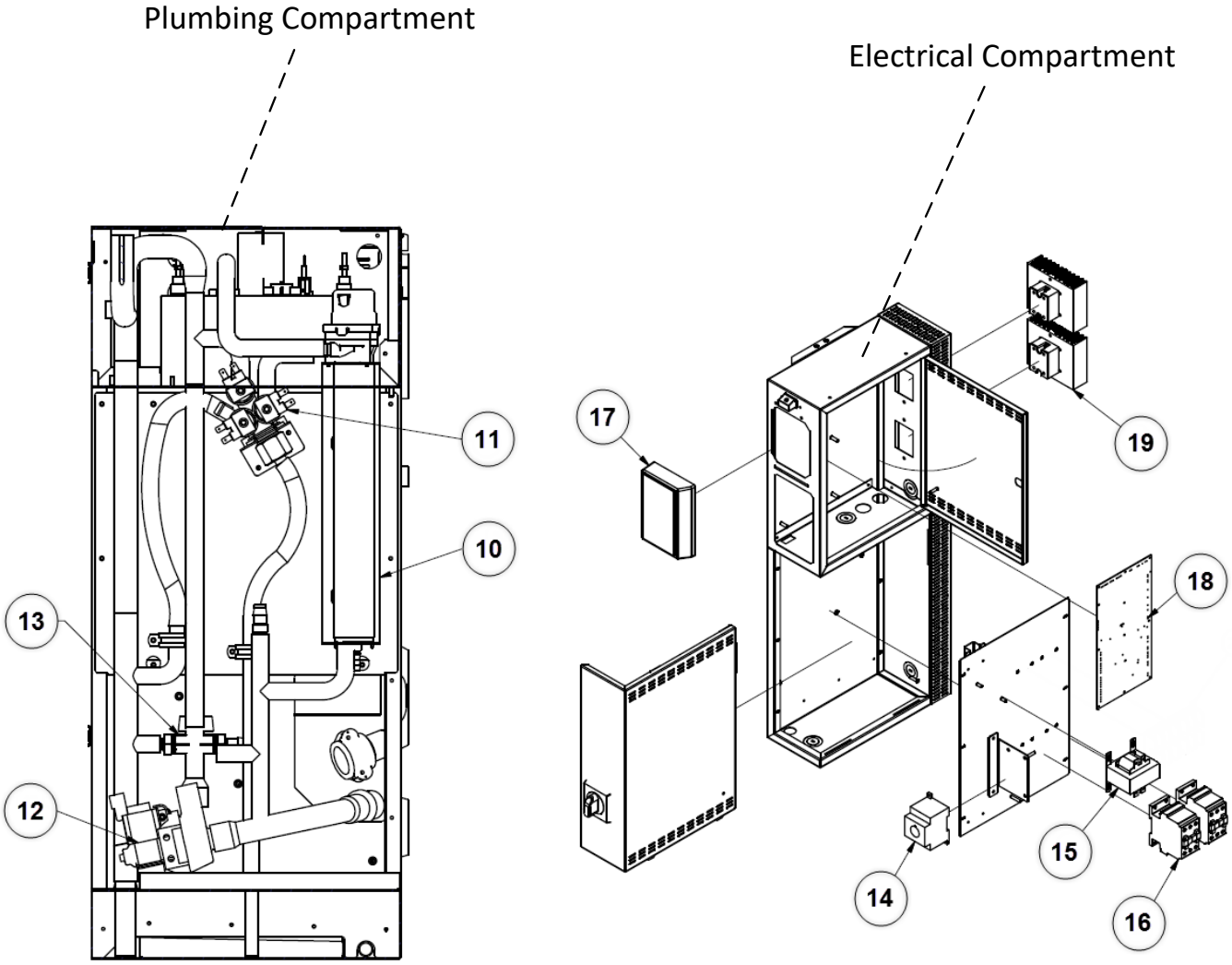

Illustration 54 - Exploded View Part 2

Bill of Material

Table 24 - Bill of Material

Item	Description	Model	Part Number
1	Evaporation chamber container	SKE4-N02 to SKE4-N06	SW 4222-20
		SKE4-N02 to SKE4-N06 (Ultrapure DI option)	SW 4222-20SS
		SKE4-N10 to SKE4-N30	SW 4232-20
		SKE4-N10 to SKE4-N30 (Ultrapure DI option)	SW 4232-20SS
		SKE4-N20L to SKE4-N60	SW 4242-20
		SKE4-N20L to SKE4-N60 (Ultrapure DI option)	SW 4242-20SS
		SKE4-N30X to SKE4-N100	SW 4245-20
		SKE4-N30X to SKE4-N100 (Ultrapure DI option)	SW 4245-24
2	Evaporation chamber cover	SKE4-N02 to SKE-N06 (1 phase)	SP 4222-1R
		SKE4-N02 to SKE-N06 (3 phases)	SP 4222-2R
		SKE4-N10 to SKE4-N14	SP 4232-1R
		SKE4-N16 to SKE4-N30	SP 4232-2R
		SKE4-N20L to SKE4-N60	SP 4242-1R
		SKE4-N30X to SKE4-N70	SP 4251
		SKE4-N80 to SKE4-N100	SP 4252
3	Evaporation chamber gasket	SKE4-N02 to SKE4-N06	SP 4222-8
		SKE4-N10 to SKE4-N30	SP 4232-8
		SKE4-N20L to SKE4-N100	SP 4242-8
4	Heating element	See table below	
5	Washer (heating element)	SKE4-N02 to SKE4-N100	SP 1005
6	S/S hex. jam nut (heating element)	SKE4-N02 to SKE4-N100	SP 2330
7	Temperature sensor	See table below	
8	High temperature switch (klixon)	SKE4-N02 to SKE4-N100	SP 3036
9	Foam sensor	SKE4-N02 to SKE4-N06	SW FOAMSM-ASSY
		SKE4-N10 to SKE4-N60	SW FOAMMED-ASSY
		SKE4-N30X to SKE4-N100	SW FOAMSM-ASSY
10	Water level sensor	See table below	
11	Water supply valve	SKE4-N02 to SKE4-N100	SP 6009
12	Drain pump	SKE4-N02 to SKE4-N100	SP G4101
13	Drain valve	All indoor models	SP 4233-59
		All outdoor models	SP6012 (Blue Enclosure)
			SP6016 (Honeywell)
14	Disconnect switch	See table below	
15	Transformer	See table below	
16	Contactor	See table below	
17	Alphanumeric display with white cable	SKE4-N02 to SKE4-N100	SW SKE4DISPLAY-AS
		SKE4-N02W to SKE4-N60W	SW SKE4DISPLAY2
		SKE4-N70W to SKE4-N100W	SW SKE4DISPLAY3
	Alphanumeric display with grey cable	SKE4-N02 to SKE4-N100	SW SKE4DISPLAYB
		SKE4-N02W to SKE4-N60W	SW SKE4DISPLAY2B
		SKE4-N70W to SKE4-N100W	SW SKE4DISPLAY3B
18	Printed circuit board	SKE4-N02 to SKE4-N100	NW SKE4MAINSS
		SKE4-N02W to SKE4-N100W	NW SKE4MAINWSS
19	Solid-state relay	SKE4-N02 to SKE4-N14, SKE4-N16 (600V), SKE4-N20 to SKE4-N90, SKE4-N100 (600V)	SP 3102
		SKE4-N16 (208V), SKE4-N100 (480V)	SP 3103
20	SDU steam dispersion manifold	SDU4-1	SP 4134
		SDU4-2	SP 4135
		SDU4-3	SP 4136
21	SDU relay	SDU4-1, SDU4-2 & SDU4-3	SP 3114
22	SDU fan	SDU4-1 (120, 208, 480, 600V)	SP 3011
		SDU4-1 (240V)	SP 3012
		SDU4-2	SP 3009
		SDU4-3	SP 3014
23	SDU transformer	See table below	
24	Fuse inside SDU	SDU4-1, SDU4-2 & SDU4-3	SP 5101

Item	Description	Model	Part Number
25	SDU airflow switch	SDU4-1, SDU4-2 & SDU4-3	SP 4137
26	SDU plastic grill	SDU4-1, SDU4-2 & SDU4-3	SP 4131-11

Table 25 - Additional Bill of Material Details

Model		4 Heating element	7 Temperature sensor	10 Water level sensor	14 Disconnect switch	15 Transformer	16 Contactor	23 SDU transformer
SKE4-N02	120V/1	SW 5943	SW SK4TEMPSENS-6	Regular: SW SK4WLTR1-HEAD Ultrapure DI option: SW SK4WLTR3-HEAD	DP13-3004	SP 3380	SP 3080	-
	240V/1	SW 5932	SW SK4TEMPSENS-6		DP13-3004	SP 3310	DP11-6002	-
	208V/1	SW 5933	SW SK4TEMPSENS-6		DP13-3004	SP 3308	DP11-6002	SP 3305
	480V/1	SW 5934	SW SK4TEMPSENS-6		DP13-3004	SP 3321	DP11-6002	SP 3329
	600V/1	SW 5935	SW SK4TEMPSENS-6		DP13-3004	SP 3341	DP11-6002	SP 3349
SKE4-N04	240V/1	SW 5937	SW SK4TEMPSENS-6		DP13-3004	SP 3310	SP 3080	-
	208V/1	SW 5940	SW SK4TEMPSENS-6		DP13-3004	SP 3308	SP 3080	SP 3305
	208V/3	SW 5924 (3x)	SW SK4TEMPSENS-6		DP13-3004	SP 3308	DP11-6002	SP 3305
	480V/1	SW 5941	SW SK4TEMPSENS-6		DP13-3004	SP 3321	DP11-6002	SP 3329
	480V/3	SW 5923 (3x)	SW SK4TEMPSENS-6		DP13-3004	SP 3321	DP11-6002	SP 3329
	600V/1	SW 5942	SW SK4TEMPSENS-6		DP13-3004	SP 3341	DP11-6002	SP 3349
	600V/3	SW 5925 (3x)	SW SK4TEMPSENS-6		DP13-3004	SP 3341	DP11-6002	SP 3349
SKE4-N06	240V/1	SW 5938	SW SK4TEMPSENS-6		DP13-3004	SP 3310	SP 3100	-
	208V/1	SW 5943	SW SK4TEMPSENS-6		DP13-3004	SP 3308	SP 3100	SP 3305
	208V/3	SW 5933 (3x)	SW SK4TEMPSENS-6		DP13-3004	SP 3308	SP 3080	SP 3305
	480V/1	SW 5944	SW SK4TEMPSENS-6		DP13-3004	SP 3321	DP11-6002	SP 3329
	480V/3	SW 5934 (3x)	SW SK4TEMPSENS-6		DP13-3004	SP 3321	DP11-6002	SP 3329
	600V/1	SW 5945	SW SK4TEMPSENS-6		DP13-3004	SP 3341	DP11-6002	SP 3349
	600V/3	SW 5935 (3x)	SW SK4TEMPSENS-6		DP13-3004	SP 3341	DP11-6002	SP 3349
SKE4-N10	208V/3	SW 5959 (3x)	SW SK4TEMPSENS-12	Regular: SW SK4WLTR2-HEAD Ultrapure DI option: SW SK4WLTR4-HEAD	DP13-3004	SP 3308	SP 3100	SP 3305
	480V/3	SW 5958 (3x)	SW SK4TEMPSENS-12		DP13-3004	SP 3321	DP11-6002	SP 3329
	600V/3	SW 5957 (3x)	SW SK4TEMPSENS-12		DP13-3004	SP 3341	DP11-6002	SP 3349
SKE4-N14	208V/3	SW 5946 (3x)	SW SK4TEMPSENS-12		DP13-3005	SP 3308	SP 3100	SP 3305
	480V/3	SW 5947 (3x)	SW SK4TEMPSENS-12		DP13-3004	SP 3321	SP 3080	SP 3329
	600V/3	SW 5948 (3x)	SW SK4TEMPSENS-12		DP13-3004	SP 3341	SP 3080	SP 3349
SKE4-N16	208V/3	SW 5960 (3x)	SW SK4TEMPSENS-12		DP13-3005	SP 3308	DP11-6008	SP 3368
	480V/3	SW 5971 (3x)	SW SK4TEMPSENS-12		DP13-3004	SP 3321	SP 3080	SP 3395
	600V/3	SW 5958 (3x)	SW SK4TEMPSENS-12		DP13-3004	SP 3341	SP 3080	SP 3396
SKE4-N20	480V/3	SW 5950 (3x)	SW SK4TEMPSENS-12		DP13-3004	SP 3321	SP 3100	SP 3395
	600V/3	SW 5951 (3x)	SW SK4TEMPSENS-12		DP13-3004	SP 3341	SP 3080	SP 3396
SKE4-N30	480V/3	SW 5952 (3x)	SW SK4TEMPSENS-12		DP13-3004	SP 3321	SP 3100	SP 3395
	600V/3	SW 5939 (3x)	SW SK4TEMPSENS-12		DP13-3004	SP 3341	SP 3100	SP 3396
SKE4-N20L	208V/3	SW 5959 (6x)	SW SK4TEMPSENS-12		DP13-3005	SP 3308	SP 3100 (2x)	-
SKE4-N27	208V/3	SW 5946 (6x)	SW SK4TEMPSENS-12		DP13-3006	SP 3308	SP 3100 (2x)	-
SKE4-N32	208V/3	SW 5960 (6x)	SW SK4TEMPSENS-12		DP13-3006	SP3308	DP11-6008 (2x)	-
SKE4-N40	480V/3	SW 5950 (6x)	SW SK4TEMPSENS-12		DP13-3005	SP 3321	SP 3100 (2x)	-
	600V/3	SW 5951 (6x)	SW SK4TEMPSENS-12		DP13-3005	SP 3341	SP 3080 (2x)	-
SKE4-N50	480V/3	SW 5950 (3x) SW 5952 (3x)	SW SK4TEMPSENS-12		DP13-3006	SP 3321	SP 3100 (2x)	-
	600V/3	SW 5939 (3x) SW 5951 (3x)	SW SK4TEMPSENS-12		DP13-3005	SP 3341	SP 3100 (2x)	-
SKE4-N60	480V/3	SW 5952 (6x)	SW SK4TEMPSENS-12		DP13-3006	SP 3321	SP 3100 (2x)	-
	600V/3	SW 5939 (6x)	SW SK4TEMPSENS-12		DP13-3006	SP 3341	SP 3100 (2x)	-
SKE4-N30X	208V/3	SW 5959 (9x)	SW SK4TEMPSENS-12		DP13-3006	SP 3381	SP 3100 (3x)	-
SKE4-N40X	208V/3	SW 5946 (9x)	SW SK4TEMPSENS-12		DP13-3008	SP 3381	SP 3100 (3x)	-
SKE4-N70	480V/3	SW 5950 (6x) SW 5952 (3x)	SW SK4TEMPSENS-12		DP13-3006	SP 3383	SP 3100 (3x)	-
	600V/3	SW 5951 (6x) SW 5939 (3x)	SW SK4TEMPSENS-12		DP13-3006	SP 3384	SP 3100 (3x)	-
SKE4-N80	480V/3	SW 5952 (6x) SW 5950 (3x)	SW SK4TEMPSENS-12		DP13-3008	SP 3383	SP 3100 (3x)	-
	600V/3	SW 5939 (6x) SW 5951 (3x)	SW SK4TEMPSENS-12		DP13-3006	SP 3384	SP 3100 (3x)	-
SKE4-N90	480V/3	SW 5962 (9x)	SW SK4TEMPSENS-12		DP13-3008	SP 3383	SP 3100 (3x)	-
	600V/3	SW 5963 (9x)	SW SK4TEMPSENS-12		DP13-3006	SP 3384	SP 3100 (3x)	-
SKE4-N100	480V/3	SW 5969 (9x)	SW SK4TEMPSENS-12		DP13-3008	SP 3383	DP11-6008 (3x)	-
	600V/3	SW 5970 (9x)	SW SK4TEMPSENS-12		DP13-3008	SP 3384	SP 3100 (3x)	

Notes

400 Lebeau blvd, Montreal, Qc, H4N 1R6, Canada
www.neptronic.com
Toll free in North America: 1-800-361-2308
Tel.: (514) 333-1433
Fax: (514) 333-3163
Customer service fax: (514) 333-1091
Monday to Friday: 8:00am to 5:00pm (Eastern time)