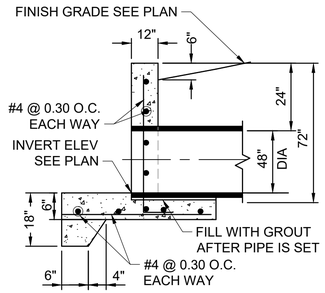

K1 HEADWALL - SECTION
SCALE: NTS

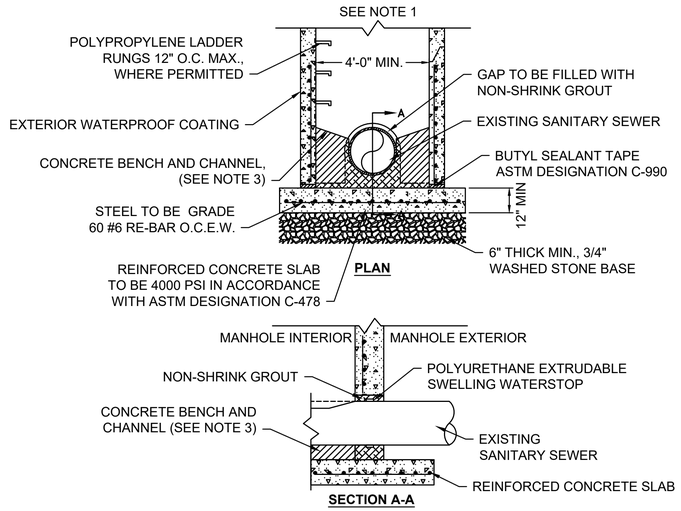

NOTES:

1. SEE PRECAST STANDARD MANHOLE DETAIL FOR TYPICAL INSTALLATION.
2. PRECAST MANHOLE SECTIONS TO BE IN ACCORDANCE WITH ASTM DESIGNATION C478.
3. SOLID CONCRETE BENCH AND CHANNEL TO BE CONSTRUCTED BY CONTRACTOR.
4. EXTERIOR COATING NOT REQUIRED IN TEXAS.

H8 DOGHOUSE MANHOLE
SCALE: NTS

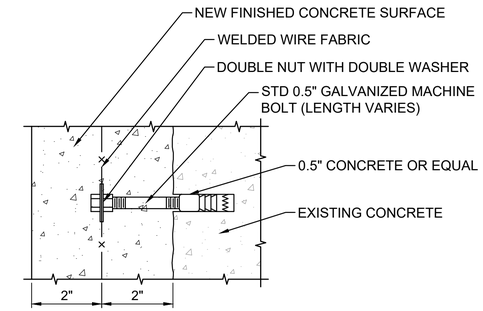

L15 CONCRETE ANCHOR BOLT
SCALE: NTS

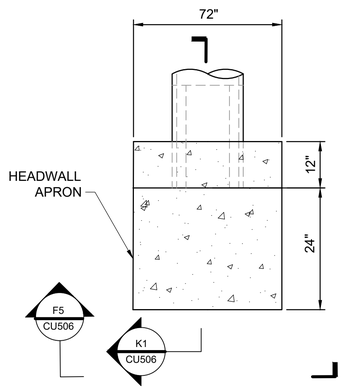

F1 HEADWALL - PLAN
SCALE: NTS

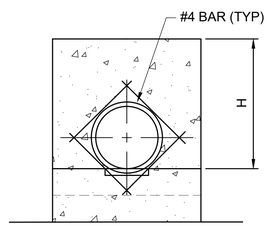

F5 HEADWALL - ELEVATION
SCALE: NTS

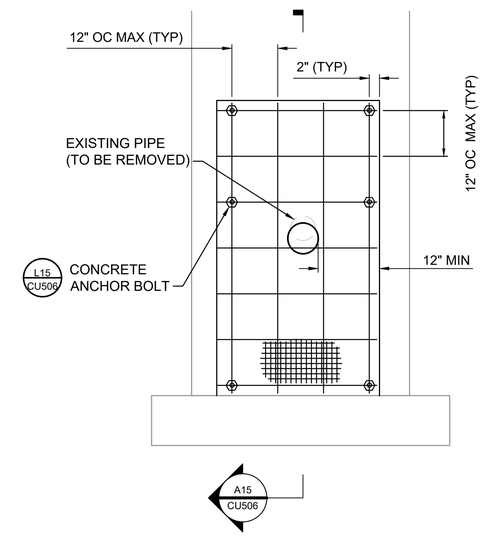

F15 MANHOLE REPAIR - ELEVATION
SCALE: NTS

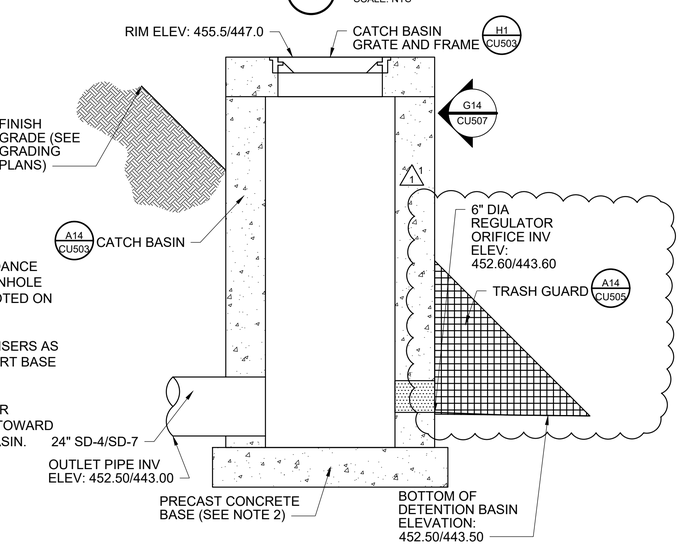

NOTES:

1. DESIGN IN ACCORDANCE WITH PRECAST MANHOLE REQUIREMENTS NOTED ON CU504.
2. ADD ADDITIONAL RISERS AS NEEDED TO SUPPORT BASE OF INLET.
3. ORIENT REGULATOR ORIFICE OPENING TOWARD THE DETENTION BASIN.

A1 SDI-4/SDI-9 DETENTION BASIN OUTLET STRUCTURE - SECTION
SCALE: NTS

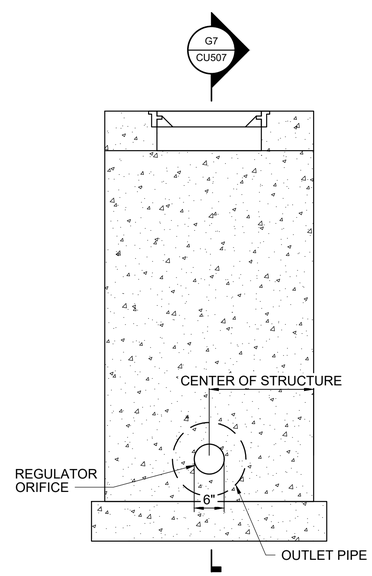

A8 SDI-4/SDI-9 DETENTION BASIN OUTLET STRUCTURE - ELEVATION
SCALE: NTS

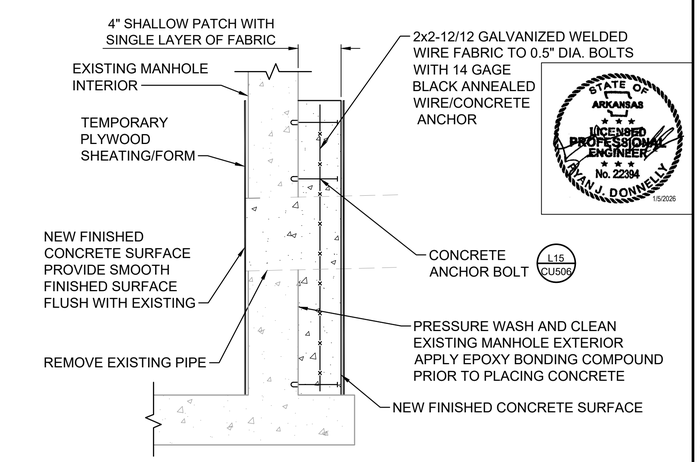

STATE OF ARKANSAS
LICENSED PROFESSIONAL ENGINEER
No. 22394
1/5/2026
JOHN J. DONNELLY

A15 MANHOLE REPAIR - SECTION
SCALE: NTS

US Army Corps of Engineers ®

MARK	DESCRIPTION	DATE
1	AM0002 - REMOVED CATHODIC PROTECTION	JAN 2026
0	READY-TO-ADVERTISE (RTA) SUBMITTAL	JUL 2025

US ARMY CORPS OF ENGINEERS
LITTLE ROCK DISTRICT
LITTLE ROCK, ARKANSAS

BURNS AND McDONNELL
9400 WARD PARKWAY,
KANSAS CITY MO, 64114
165438

DESIGNED BY: R. DONNELLY
DRAWN BY: D. HINEMAN
CHECKED BY: R. BARUTH
SUBMITTED BY: STREEPER
SIZE: ANSI D
ISSUE DATE: JUL 2025
SOLICITATION NO.: W912TS25RA001
CONTRACT NO.: W912TS24F0007
FILE NAME: 165438CU501.dwg

F-35; SPECIAL ACCESS PROGRAM FACILITY
EBBING AIR NATIONAL GUARD BASE (ANGB), FORT SMITH, ARKANSAS

UTILITY DETAILS

SHEET ID
CU506.1

READY-TO-ADVERTISE (RTA) SUBMITTAL