Quality People. Building Solutions.

Comfort Systems USA (Arkansas), Inc.
P.O. Box 16620
Little Rock, AR 72231
Phone 501-834-3320
Fax 501-834-5416

Date: 9/26/25
Return Request: 10/17/25
Project: Bentonville WRRF
Supplier: Powers of Arkansas
Manufacturer: Cook
Submittal: Utility Blowers
Submittal Number: 15500-10
Spec Section: HVAC
Drawing #: Mechanical

ENGINEER
Hawkins Weir

GENERAL CONTRACTOR
Crossland Heavy Contractors

ENGINEER
Black and Veatch

MECHANICAL SUBCONTRACTOR
Comfort Systems USA
(Arkansas), Inc.
116 Commercial Ave
Lowell, AR 72745
479-770-8992

Notes:

CSUSA PROJECT NO.
25-5027
jzuber@comfortar.com

4806 Rixey Road
No. Little Rock, AR 72117

M-15500-005-A

CREATING CUSTOMERS FOR LIFE

POWERS

IOM

PRODUCT	UB Utility Blowers
SPECIFICATION	15500.C.17, pg.17
MANUFACTURER	Loren Cook
JOB NAME	Bentonville Water Res Recovery Facility Impvts #2021037
LOCATION	Bentonville, AR
ENGINEER	Hawkins Weir
CONTRACTOR	Knight & Wilson
DATE	9/20/2025
SUBMITTED BY	Chris Atwood
LEAD TIME	9 Weeks

5440 Northshore Drive - North Little Rock, Arkansas 72118 - Tel: 501.374.5420 Fax: 501.370.9298

This publication contains the installation, operation and maintenance instructions for standard units of the *CA, CF, and CP: Centrifugal Blowers.*

- CA/CF SWSI
- CA-4 SWSI
- CA DWDI
- CA-4 DWDI
- CPFD
- CPFB
- CAF-DW
- CPA/CPA-A/CPS/ CPS-A/CPV

Carefully read this publication and any supplemental documents prior to any installation or maintenance procedure.

Loren Cook catalogs, *CA/CF* and *CP,* provide additional information describing the equipment, fan performance, available accessories and specification data.

For additional safety information, refer to AMCA Publication 410-96, *Safety Practices for Users and Installers of Industrial and Commercial Fans*.

All of the publications listed above can be obtained from:

- lorencook.com
- *info@lorencook.com*
- 417-869-6474 ext. 166

For information and instructions on special equipment, contact Loren Cook Company at 417-869-6474.

Receiving and Inspection

Carefully inspect the fan and accessories for any damage and shortage immediately upon receipt of the fan.

- Turn wheel by hand to ensure it turns freely and does not bind
- Inspect dampers (if supplied) for free operation of all moving parts
- Record on the *Delivery Receipt* any visible sign of damage

Handling

Lift the fan by the base or lifting eyes.

NOTICE! Never lift by the shaft, motor or housing.

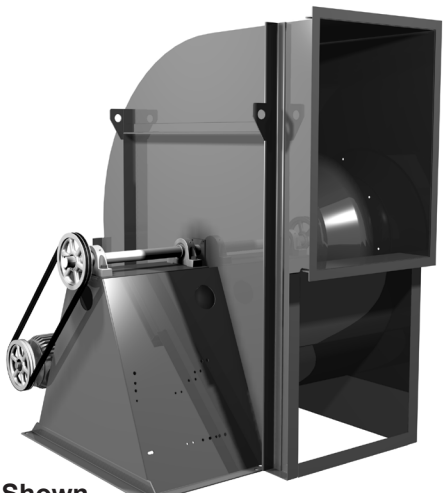

CA SWSI Shown

⚠ WARNING

Rotating Parts & Electrical Shock Hazard:

Fans should be installed and serviced by qualified personnel only.

Disconnect electric power before working on unit (prior to removal of guards or entry into access doors).

Follow proper lockout/tagout procedures to ensure the unit cannot be energized while being installed or serviced.

A disconnect switch should be placed near the fan in order that the power can be swiftly cut off, in case of an emergency and in order that maintenance personnel are provided complete control of the power source.

Grounding is required. All field-installed wiring must be completed by qualified personnel. All field installed wiring must comply with National Electric Code (NFPA 70) and all applicable local codes. Ensure the power supply (voltage, frequency and current carrying capacity of wires) is in accordance with the motor nameplate.

Fans and blowers create pressure at the discharge and vacuum at the inlet. This may cause objects to get pulled into the unit and objects to be propelled rapidly from the discharge. The discharge should always be directed in a safe direction and inlets should not be left unguarded. Any object pulled into the inlet will become a projectile capable of causing serious injury or death.

When air is allowed to move through a non-powered fan, the impeller can rotate, which is referred to as windmilling. Windmilling will cause hazardous conditions due to unexpected rotation of components. Impellers should be blocked in position or air passages blocked to prevent draft when working on fans.

Friction and power loss inside rotating components will cause them to be a potential burn hazard. All components should be approached with caution and/or allowed to cool before contacting them for maintenance.

Under certain lighting conditions, rotating components may appear stationary. Components should be verified to be stationary in a safe manner, before they come into contact with personnel, tools or clothing.

Failure to follow these instructions could result in death or serious injury.

The attachment of roof mounted fans to the roof curb as well as the attachment of roof curbs to the building structure must exceed the structural requirements based on the environmental loading derived from the applicable building code for the site. The local code official may require variations from the recognized code based on local data. The licensed engineer of record will be responsible for prescribing the correct attachment based on construction materials, code requirements and environmental effects specific to the installation.

Storage

If the fan is stored for any length of time prior to installation, completely fill the bearings with grease or moisture-inhibiting oil (refer to *Lubrication*, pages 6–7). Rotate the wheel several revolutions every three to five days to keep a coating of grease on all internal bearing parts.

Store the fan in its original crate and protect it from dust, debris and weather.

Outdoor Storage

To maintain good working condition of the fan when it is stored outdoors, follow the additional instructions below.

- Coat the shaft with grease or a rust preventative compound
- Wrap bearings for weather protection
- Cover the inlet and outlet to prevent the accumulation of dirt and moisture in the housing
- Periodically rotate the wheel and operate dampers (if supplied)
- Periodically inspect the unit to prevent damaging conditions

Installation

Motor Installation

Most motors are shipped mounted on the fans with belts and drives installed. However, extremely heavy motors and drives are shipped separately. These motors and drives will require field installation.

Foundation

This fan requires a strong, level foundation of reinforced poured concrete. A correctly designed concrete foundation provides the best means for mounting floor units. The foundation's size is determined by fan size and arrangement, motor size and position and the specific location of the installation.

Use the following guidelines to calculate foundation size.

- The overall dimensions of the foundation should extend at least six inches beyond the outline of the fan and its motor
- The weight of the foundation should be two to three times the weight of the unit and its motor

Isolation

NOTICE! Although a certain amount of vibration is inherent in operating centrifugal fans, extreme vibration is a serious problem that may cause structural and mechanical failure.

Isolation Base

To prevent vibration and noise from being transferred to the building isolators are recommended. Arrangement 1, 2 and 3 (CA or CF) fans require an isolation base to effectively isolate the fan system which includes the fan, base, motor, drive, guards, etc. Bases must have sufficient rigidity to resist belt pull and prevent drive distortion which can lead to excessive belt and bearing wear; its perimeter should contain all base angles and rotating parts. Arrangement 4, 7, 8, 9 and 10 fans (CA, CF and CP) above size 270 require either isolation rails or an isolation base. Please consult factory for isolation of arrangement 9 fans due to the potential of uneven loading caused by the motors and drives. Isolators should be located between the

Ceiling Mounted Spring and Rubber-in-Shear (RIS) Isolators

NOTICE! Under no circumstance is the fan to be mounted inverted and hung by its base angles.

1. Mount fan on isolation base or rails.
2. Elevate fan to operating height and brace.
3. Attach threaded rod to overhead support structure directly above each mounting hole. Rod should extend to within a few feet of fan.
4. Attach isolator to end of threaded rod using a nut on each side of isolator bracket.
5. Insert another section of threaded rod through the fan mounting hole and isolator.
6. Attach two nuts to threaded rod isolator.
7. Place adjusting nut and locking nut on threaded rod near fan mounting bracket.
8. Alternately rotate adjusting nut at each mounting location until the fan weight is uniformly transferred to the isolators. Remove bracing.

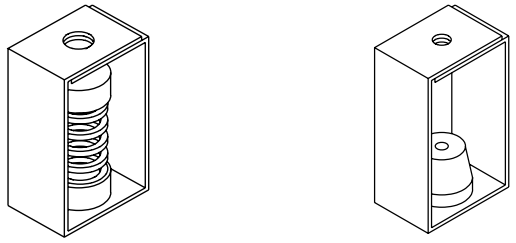

Ceiling Mounted Spring Isolator Rubber-in-Shear Ceiling Isolator

Figure 1- Ceiling Mount Isolators

Floor Mounted Spring Isolators

1. Mount fan and motor on isolation base or rails (if supplied).
2. Elevate fan (or isolation base/rails) to operating height and insert blocks to hold in position.
3. Position isolators under the fan (or isolation base/rails) and vertically align by inserting leveling bolt through mounting holes in the fan or the base. The isolator must be installed on a level surface.
4. Adjust the isolators by turning the leveling nut counter clockwise several turns at a time alternately on each isolator until the fan weight is transferred onto the isolators and the fan raises uniformly off the blocks. Then remove the blocks.
5. Turn lock nut onto leveling bolt and secure firmly in place against the top of the mounting flange or frame.
6. Secure isolators to mounting surface.

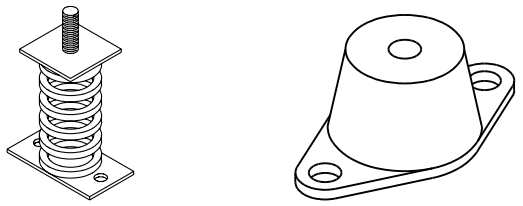

Spring Isolator Rubber-in-Shear Isolator

Figure 2- Floor Mount Isolators

Floor Mounted Rubber-In-Shear (RIS) Isolators

1. Mount fan and motor on isolation base or rails (if supplied).
2. Elevate fan (or isolation base/rails) to provide room to insert isolators between the base and foundation and

3. Position isolators under fan (or isolation base/rails) and secure bolts.
4. Remove blocks and allow fan to rest on floor. Isolators must be installed on a level surface (leveling should not be required).
5. Secure isolators to mounting surface.

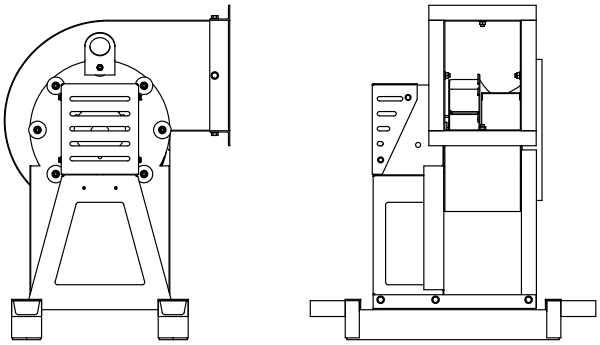

Duct Installation

Efficient fan performance relies on the proper installation of inlet and discharge ducts. Be sure your fan conforms to the guidelines below.

Non-Ducted Inlet Clearance

If your fan has an open inlet (no duct work), the fan must be placed 1 fan wheel diameter away from walls and bulkheads. An inlet bell should be used in this case.

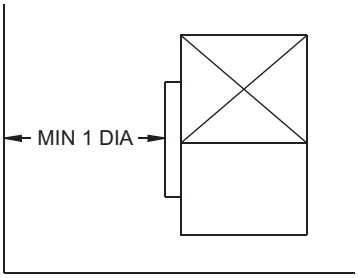

Non-Ducted Inlet Clearance

Free Discharge

Avoid a free discharge into the plenum. This will result in lost efficiency because it doesn't allow for a static regain.

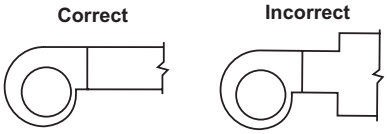

Free Discharge

Inlet Duct Turns

For ducted inlets, allow at least 3 fan wheel diameters between duct turns or elbows and the fan inlet.

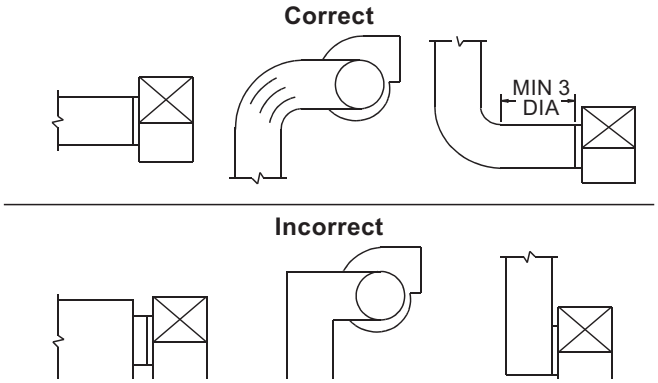

Discharge Duct Turns

Make sure that duct turns located near the fan discharge curve in the direction of the fan's rotation.

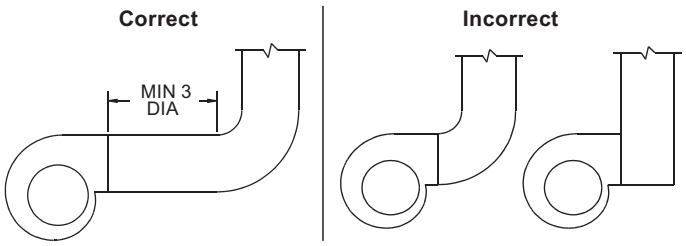

Discharge Duct Turns

CP with Optional Curb Cap and Inlet Box

NOTICE! UL 762/NFPA96 and local codes may dictate additional or modifications to this installation.

The installation diagram below has a solid curb cap duct adapter placed over the top of the curb. The welded grease duct with recommended transition is either welded or sealed with UL recognized fire caulk to both the curb cap duct adapter and the bottom of the fan. A minimum of two separate outlines of caulk is recommended at the outer portion of the curb cap duct adapter.

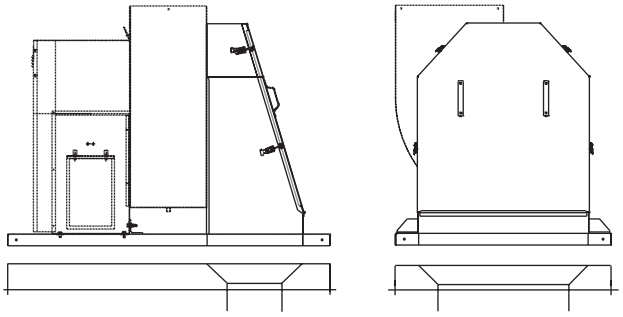

Wheel-to-Inlet Clearance

The correct wheel-to-inlet clearance is critical to proper fan performance. This clearance should be verified before initial start-up since rough handling during shipment could cause a shift in fan components. Refer to the wheel/inlet drawing for correct overlap.

Adjust the overlap by loosening the wheel hub and moving the wheel along the shaft to obtain the correct value.

A uniform radial gap (space between the edge of the cone and the edge of the inlet) is obtained by loosening the inlet cone bolts and repositioning the inlet cone.

CA, CF and CP

Size	Overlap
60–165	3/16"
180–245	1/4"
270–300	5/16"
330–365	3/8"
402	7/16"
445–490	1/2"
540–730	13/16"

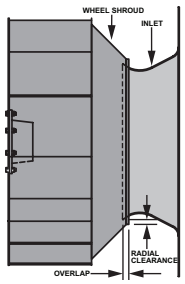

CPFD, CPFB

Size	Gap/Clearance
100 - 150	1/4
180	3/16
220	1/2

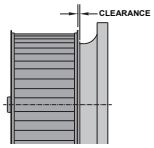

CAF-DW

Size	Overlap
120	1/8”
135–165	5/32”
180	1/4”
195	5/32”
210	1/4”
225	5/32”
245	9/32”
270–445	1/4”
490	17/32”
540–600	27/32”
660–730	25/32”

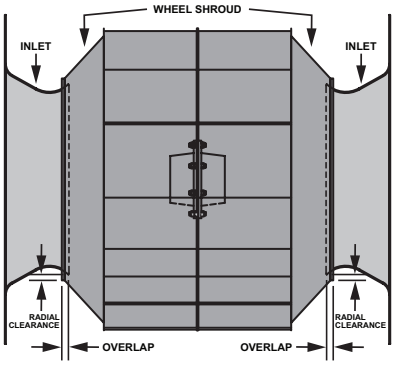

Wiring Installation

Leave enough slack in the wiring to allow for motor movement when adjusting belt tension. Some fractional motors have to be removed in order to make the connection with the terminal box at the end of the motor. To remove motor, remove bolts securing motor base to power assembly. Do not remove motor mounting bolts.

Units with Arrangement 10 have a hole provided at the base of the bearing pedestal to accommodate wiring.

NOTICE! Follow the wiring diagram in the disconnect switch and the wiring diagram provided with the motor. Correctly label the circuit on the main power box and always identify a closed switch to promote safety (i.e., red tape over a closed switch).

Wheel Rotation

Test the fan to ensure the rotation of the wheel is the same as indicated by the arrow marked *Rotation*.

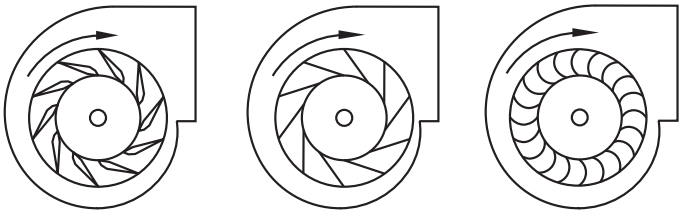

Airfoil **Backward Inclined** **Forward Curved**

115 and 230 Single Phase Motors

Fan wheel rotation is set correctly at the factory. Changing the rotation of this type of motor should only be attempted by a qualified electrician.

208, 230 and 460 3 Phase Motors

These motors are electrically reversible by switching two of the supply leads. For this reason, the rotation of the fan cannot be restricted to one direction at the factory. See *Wiring Diagrams*, page 5, for specific information on reversing wheel direction.

NOTICE! Do not allow the fan to run in the wrong direction. This will overheat the motor and cause serious damage. For 3-phase motors, if the fan is running in the wrong direction, check the control switch. It is possible to interchange two leads at this location so that the fan is operating in the correct direction.

Belt and Pulley Installation

Belt tension is determined by the sound the belts make when the fan is first started. Belts will produce a loud squeal which dissipates after the fan is operating at full capacity. If the belt tension is too tight or too loose, lost efficiency and possible damage can occur.

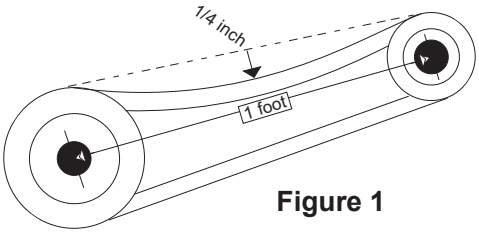

Figure 1

Do not change the pulley pitch diameter to change tension. This will result in a different fan speed.

1. Loosen motor plate adjustment bolts and move motor in order that the belts can easily slip into the grooves on the pulleys. Never pry, roll or force the belts over the rim of the pulley.
2. Slide the motor plate back until proper tension is reached. For proper tension, a deflection of approximately 1/4” per foot of center distance should be obtained by firmly pressing the belt. Refer to *Figure 1*.
3. Lock the motor plate adjustment bolts in place.
4. Ensure pulleys are properly aligned. Refer to *Figure 2*.

Tolerance

Center Distance	Max. Gap
Up through 12”	1/16”
12” through 48”	1/8”
Over 48”	1/4”

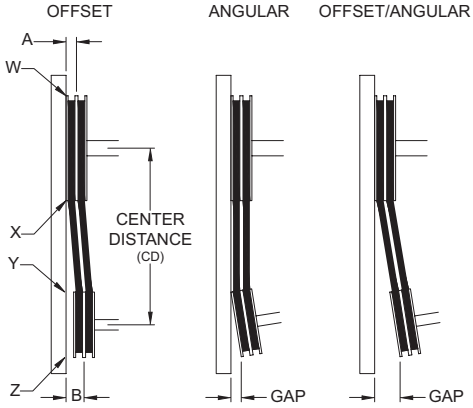

Figure 2

Pulley Alignment

Pulley alignment is adjusted by loosening the motor pulley setscrew and by moving the motor pulley on the motor shaft.

Figure 2 indicates where to measure the allowable gap for the drive alignment tolerance. All contact points (indicated by WXYZ) are to have a gap less than the tolerance shown in the table. When the pulleys are not the same width, the allowable gap must be adjusted by half of the difference in width (as shown in A & B of *Figure 2*). *Figure 3* illustrates using a carpenter’s square to adjust the position of the motor pulley until the belt is parallel to the longer leg of the square.

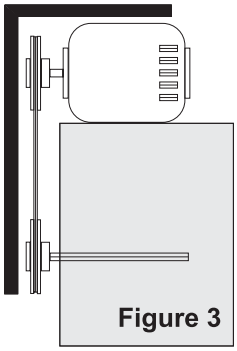

Figure 3

Final Installation Steps

1. Inspect fasteners and setscrews, particularly fan mounting and bearing fasteners, and tighten according to the table, *Recommended Torque for Setscrews/Bolts*.
2. Inspect for correct voltage with voltmeter.
3. Ensure all accessories are installed.

Recommended Torque for Setscrews/Bolts (IN-LB)

Setscrews				Hold Down Bolts	
Size	Key Hex Across Flats	Recommended Torque		Size	Recommended Torque
		Min.	Max.		
#8	5/64”	15	21	3/8”-16	324
#10	3/32”	27	33	1/2”-13	780
1/4	1/8”	70	80	5/8”-11	1440
5/16	5/32”	140	160	3/4”-10	2400
3/8	3/16”	250	290	7/8”-9	1920
7/16	7/32”	355	405	1”-8	2700
1/2	1/4”	560	640	1-1/8”-7	4200
5/8	5/16”	1120	1280	1-1/4”-7	6000
3/4	3/8”	1680	1920	-	-
7/8	1/2”	4200	4800	-	-
1	9/16”	5600	6400	-	-

Operation

Pre-Start Checks

1. Lock out all the primary and secondary power sources.
2. Ensure fasteners and setscrews, particularly those used for mounting the fan, are tightened.
3. Inspect belt tension and pulley alignment.
4. Inspect motor wiring.
5. Ensure belt touches only the pulleys.
6. Ensure fan and ductwork are clean and free of debris.
7. Inspect wheel-to-inlet clearance. The correct wheel-to-inlet clearance is critical to proper fan performance.
8. Close and secure all access doors.
9. For arrangement 8 CA/CF-SWSI where a coupling is installed between the fan shaft and motor shaft, ensure the shafts are properly aligned using laser alignment equipment prior to starting the fan. Refer to the coupling manufacturer’s documentation for alignment instructions and tolerances.
10. Restore power to fan.

Start-Up

Turn on the fan. In variable speed units, set fan to its lowest speed and inspect for the following:

- Direction of rotation
- Excessive vibration
- Unusual noise
- Bearing noise
- Improper belt alignment or tension (listen for squealing)
- Improper motor amperage or voltage

NOTICE! If a problem is discovered, immediately shut off the fan. Lock out all electrical power and check for the cause of the trouble. Refer to Troubleshooting.

Wiring Diagrams

Vari-Flow

For EC or VF see EC Motor Wiring supplement. For VF2 see PM wiring supplement.

Single Speed, Single Phase Motor

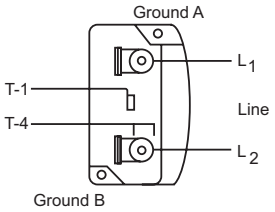

When ground is required, attach to ground A or B with No. 6 thread forming screw. To reverse, interchange T-1 and T-4.

2 Speed, 2 Winding, Single Phase Motor

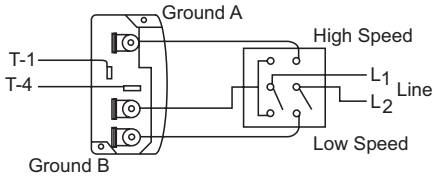

When ground is required, attach to ground A or B with No. 6 thread forming screw. To reverse, interchange T-1 and T-4 leads.

Single Speed, Single Phase, Dual Voltage

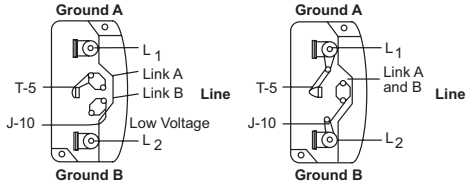

When ground is required, attach to ground A or B with No. 6 thread forming screw. To reverse, interchange T-5 and J-10 leads.

3 Phase, 9 Lead Motor

Y-Connection

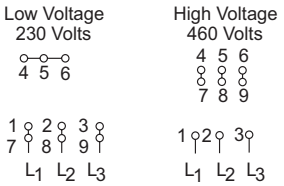

Delta-Connection

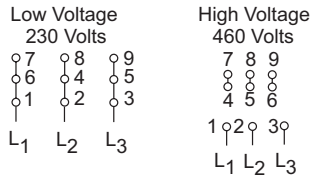

To reverse, interchange any two line leads.

2 Speed, 1 Winding, 3 Phase Motor

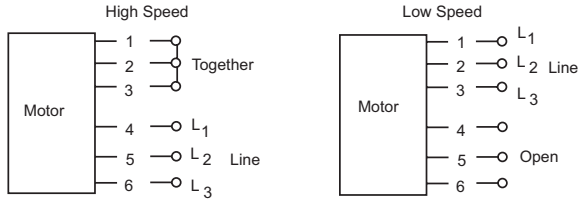

To reverse, interchange any two line leads. Motors require magnetic control.

2 Speed, 2 Winding, 3 Phase

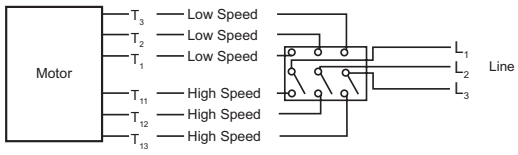

To reverse:
High Speed - interchange leads T_{11} and T_{12}.
Low Speed - interchange leads T_1 and T_2.
Both Speeds - interchange any two line leads.

Typical Damper Motor Schematic

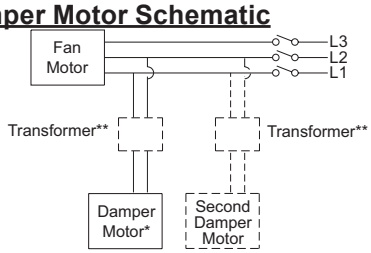

For 3-Phase, damper motor voltage should be the same between L_1 and L_2. For single phase application, disregard L_3.
*Damper motors may be available in 115, 230 or 460 volt models. The damper motor nameplate voltage should be verified prior to connection.
**A transformer may be provided in some installations to correct

Use of Variable Frequency Drives

Motors

Motors that are to be operated using a Variable Frequency Drive (VFD) must be VFD compatible. Motors that are not supplied by Loren Cook Company should have the recommendation of the motor manufacturer for use with a VFD.

Grounding

The fan frame, motor and VFD must be connected to a common earth ground to prevent transient voltages from damaging rotating elements.

Wiring

Line reactors may be required to reduce over-voltage spikes in the motors. The motor manufacturer should be consulted for recommended line impedance and usage of line reactors or filters if the lead length between the VFD and the motor exceeds 10 ft (3m).

Fan

It is the responsibility of the installing body to perform coast-down tests and identify any resonant frequencies after the equipment is fully installed. These resonant frequencies are to be removed from the operating range of the fan by using the “skip frequency” function in the VFD programming. Failure to remove resonant frequencies from the operating range will decrease the operating life of the fan and void the warranty.

Inspection

Inspection of the fan should be conducted at the first **30 minute**, **8 hour** and **24 hour** intervals of satisfactory operation. During the inspections, stop the fan and inspect as per the *Conditions Chart*.

30 Minute Interval

Inspect bolts, setscrews and motor mounting bolts. Adjust and tighten as necessary.

8 Hour Interval

Inspect belt alignment and tension. Adjust and tighten as necessary.

24 Hour Interval

Inspect belt tension, bolts, setscrews and motor mounting bolts. Adjust and tighten as necessary.

Maintenance

Establish a schedule for inspecting all parts of the fan. The frequency of inspection depends on the operating conditions and location of the fan.

Inspect fans exhausting corrosive or contaminated air within the first month of operation. Fans exhausting contaminated air (airborne abrasives) should be inspected every three months.

Regular inspections are recommended for fans exhausting non-contaminated air.

It is recommended the following inspections be conducted twice per year:

- Inspect bolts and setscrews for tightness. Tighten as necessary. Worn setscrews should be replaced immediately
- Inspect belt wear and alignment. Replace worn belts with new belts and adjust alignment as needed. Refer to *Belt and Pulley Installation*
- Bearings should be inspected as recommended in the Lubrication *Conditions Chart*
- Inspect variable inlet vanes for freedom of operation and excess the control arm. As the variable inlet vanes close, the entering air should spin in the same direction as the wheel
- Inspect springs and rubber isolators for deterioration and replace as needed
- Inspect for cleanliness. Clean exterior surfaces only. Removing dust and grease on motor housing assures proper motor cooling. Removing dirt from the wheel and housing prevent imbalance and damage

Lubrication

Fan Bearings

Greasable fan bearings are lubricated through a grease fitting on the bearing.

Lubrication Conditions Chart

Fan Class	Fan Status	Shaft Size	Maximum Interval (operation hrs)
Centrifugal Blower Class I	Normal Conditions (clean, dry & smooth)	>1-1/2”	10,000
		<1-1/2”	2,000
	Extreme Conditions (dirty/wet/rough)	>1-1/2”	2,000
		<1-1/2”	400
Centrifugal Blower Class II	Normal Conditions (clean, dry & smooth)	>2”	7500
		<2”	1000
	Extreme Conditions (dirty/wet/rough)	>2”	1500
		<2”	200
Centrifugal Blower Class III	Normal Conditions (clean, dry & smooth)	>2”	3000
		<2”	500
	Extreme Conditions (dirty/wet/rough)	>2”	500
		<2”	1000

Exceptions to the greasing interval chart:

- **Periodic Applications (any break of one week or more):** it is recommended that full lubrication be performed prior to each break in operation
- **Higher Temperature:** it is recommended to halve the intervals for every 30°F increase in operating temperature above 120°F not to exceed 230°F for standard bearings; high temperature bearings (optional) can operate up to 400°F
- **Vertical Shaft:** it is recommended that the intervals should be halved.

For best results, lubricate the bearing while the fan is in operation. Pump grease in slowly until a slight bead forms around the bearing seals. Excessive grease can burst seals thus reducing bearing life.

Before lubricating, the grease nipple and immediate vicinity should be thoroughly cleaned without the use of high pressure equipment. The grease should be supplied slowly as the bearing rotates until fresh grease slips past the seal. Excessive pressure should be avoided to prevent seal damage.

In the event the bearing cannot be seen, use no more than three injections with a hand-operated grease gun.

NOTICE! The fan bearings are provided prelubricated. Any specialized lubrication instructions on fan labels or lubrication instructions from bearing manufacturer supersedes information provided herein. Bearing grease is a petroleum lubricant in a lithium base conforming to an NLGI #2 consistency. If user desires to utilize another type of lubricant, they take responsibility for flushing bearings and lines, and maintaining a lubricant that is compatible with the installation. For temperatures above 250°F Mobiltemp SHC 32 is recommended.

Motor Bearings

Motors are provided with prelubricated bearings. Any lubrication instructions shown on the motor nameplate supersede instructions below. Motor bearings without provisions for relubrication will operate up to 10 years under normal conditions with no maintenance. In severe applications, high temperatures or excessive contaminates, it is advisable to have the maintenance department disassemble and lubricate the bearings after three years of operation to prevent interruption of service.

For motors with provisions for relubrication, follow intervals of the table below.

Relubrication Intervals

Service Conditions	Nema Frame Size					
	Up to and Including 184T		213T-365T		404T and Larger	
	1800 RPM & Less	Over 1800 RPM	1800 RPM & Less	Over 1800 RPM	1800 RPM & Less	Over 1800 RPM
Standard	3 yrs.	6 months	2 yrs.	6 months	1 yr.	3 months
Severe	1 yr.	3 months	1 yr.	3 months	6 months	1 month

Motors are provided with a polyurea mineral oil NGLI #2 grease. All additions to the motor bearings are to be with a compatible grease such as Exxon Mobil Polyrex EM and Chevron SRI.

The above intervals should be reduced to half for vertical shaft installations.

Motor Services

Should the motor prove defective within a one-year period, contact your local Loren Cook representative or your nearest authorized electric motor service representative.

Changing Shaft Speed

All belt driven fans with motors up to and including 5HP (184T max) are equipped with variable pitch pulleys. To change the fan speed, perform the following:

1. Loosen setscrew on driver (motor) pulley and remove key, if equipped.
2. Turn the pulley rim to open or close the groove facing. If the pulley has multiple grooves, all must be adjusted to the same width.
3. After adjustment, inspect for proper belt tension.

Speed Reduction

Open the pulley in order that the belt rides deeper in the groove (smaller pitch diameter).

Speed Increase

Close the pulley in order that the belt rides higher in the groove (larger pitch diameter). Ensure that the RPM limits of the fan and the horsepower limits of the motor are maintained.

Maximum RPM

CA SWSI, CPS-A, CPA-A

Size	Max. RPM		
	Class I	Class II	Class III
120	3348	4368	5503
135	2976	3883	4892
150	2678	3494	4403
165	2435	3177	4002
180	2114	2757	3474
195	1951	2545	3207
210	1812	2363	2978
225	1691	2206	2779
245	1553	2026	2553
270	1419	1851	2332
300	1277	1666	2099
330	1161	1514	1908
365	1064	1388	1749
402	965	1259	1586
445	873	1138	1434
490	793	1034	1303
540	719	938	1182
600	647	844	1094

CA and CAF DWDI

Size	Max. RPM		
	Class I	Class II	Class III
120	3714	4846	6105
135	3307	4315	5436
150	2575	3357	4230
165	2374	3095	3901
180	2176	2839	3577
195	2009	2621	3302
210	1865	2434	3066
225	1741	2271	2862
245	1631	2128	2681
270	1443	1883	2372
300	1262	1647	2074
330	1147	1496	1885
365	1038	1354	1706
402	941	1228	1547
445	851	1110	1399
490	773	1009	1271
540	702	916	1164
600	631	823	1037

CF SWSI, CPS, CPA

Size	Max. RPM		
	Class I	Class II	Class III
60-100*	4230	5519	6953
120	3404	4441	5595
135	3026	3948	4974
150	2723	3553	4476
165	2476	3230	4069
180	2269	2961	3730
195	2095	2733	3443
210	1795	2341	2950
225	1675	2185	2753
245	1539	2007	2529
300	1257	1639	2065
330	1142	1490	1877
365	1023	1334	1681
402	939	1225	1543
445	849	1108	1396
490	771	1006	1268
540	700	913	1150
600	630	822	1035
660	573	747	941
730	518	675	851

*Sizes 60 through 100 only applies to CPS and CPA.

CPV

Size	Max. RPM	
	Standard	Reinforced
60-100*	2719	-
120	2527	
135	2093	
150	2035	
165	1766	
180	1588	
195	1429	1571
210	1277	1407
225	1152	1265
245	1015	1260
270	876	1091
300	837	1006
330	716	869
365	624	805
402	539	701
445	463	660
490	360	576

RPM Derating Factor

Temperature (°F)	RPM Factor	
	Steel	Aluminum
70	1.00	1.00
200	0.98	0.93
300	0.96	0.79
400	0.94	**
500	0.91	
600	0.87	
700	0.81	
800	0.75	

**Aluminum wheels are not available above 300°.

For elevated airstream temperatures, the maximum fan speed limits must be derated by the factors above.

Pulley and Belt Replacement

1. Remove pulleys from their respective shafts.
2. Clean the motor and fan shafts.
3. Clean bores of pulleys and coat the bores with heavy oil.
4. Remove grease, rust or burrs from the pulleys and shafts.
5. Remove burrs from shaft by sanding.
6. Place fan pulley on fan shaft and motor pulley on its shaft. Damage to the pulleys can occur when excessive force is used in placing the pulleys on their respective shafts.
7. Tighten in place.
8. Install belts on pulleys and align as described in *Belt and Pulley Installation*.

Bearing Replacement

The fan bearings are pillow block ball bearings.

An emery cloth or file may be needed to remove imperfections in the shaft left by the setscrews.

For Arrangement 1, 2, 8, 9 and 10:

1. Mark the position on the shaft of both bearing races, setscrews, and the wheel and pulley. Mark the location and orientation of the inlet cone. Note the clearance between the wheel and inlet cone.
2. Remove the fan pulley and inlet cone. For arrangement 8, remove shaft coupling and inlet cone.
3. Remove the wheel from the shaft. A 2-jaw puller may be needed.
4. Remove bearing hold-down bolts. Remove shaft and bearings as one unit.
5. Remove the anti-corrosion coating from the shaft with a suitable degreaser.
6. Remove the bearing from the shaft using a bearing puller.

If a bearing puller is not available, tap on the bearing with a wood block and hammer to remove it.

7. Smooth and clean the shaft and bearing bore thoroughly.
8. Place the bearings into position making sure they are not on a worn section of the shaft. Tapping the inner ring face with a soft driver may be required.

NOTICE! Do not hammer the bearing housing.

9. The outer ring of the bearing is spherical and swivels in the housing to compensate for misalignment. Secure hold-down bolts, but do not fully tighten.
10. Align the setscrews on the bearings and tighten one setscrew on each bearing.
11. Rotate the shaft to allow the bearing outer rings to find their center of free movement.
12. Install the wheel on the shaft. Install the inlet cone in its original location. And adjust bearing position and inlet cone to center the wheel in the inlet cone.
13. Tighten hold-down bolts to proper torque.
14. Turn the shaft by hand. Resistance should be the same as it was before hold-down bolts were fully tightened.
15. Tighten bearing setscrews to specified torque. Refer to the *Recommended Torque* chart.
16. Re-install the pulley and adjust the belt tension. For arrangement 8, reinstall the shaft coupling per the coupling manufacturer's instructions. Ensure the shafts are properly aligned using laser alignment equipment prior to starting the fan. Refer to the coupling manufacturer's documentation for alignment instructions and tolerances.
17. Test run and retighten all setscrews and bolts; trim balance as necessary (.0785 in/sec max.).

After 24 hours of operation, retighten the setscrews to the appropriate torque. This assures full locking of the inner race to the shaft. Make sure the socket key or driver is in good condition with no rounded corners. The key should be fully engaged in the setscrew and held squarely to prevent rounding out of the setscrew socket when applying maximum torque.

For Arrangement 3:

Bearings should be replaced individually for each side of fan.

1. Loosen and remove belts.
2. If replacing drive side bearing, mark location of pulley and then remove.
3. Mark bearing location on bearing support and loosen bearing hold down bolts.
4. Support shaft to remove weight from bearing.
5. Remove anti-corrosion coating from the shaft with a suitable de-greaser.
6. Remove bearing from the shaft using a bearing puller. If a bearing puller is not available, tap on the bearing with a wood block and hammer to remove it.
7. Smooth and clean the shaft and bearing bore thoroughly.
8. Place the bearing into position making sure it is not on a worn section of the shaft. Tapping the inner ring face with a soft driver may be required. Do not hammer on the housing.
9. The outer ring of the bearing is spherical and swivels in the housing to compensate for misalignment. Secure hold-down bolts, but do not fully tighten.
10. Align setscrews on the bearings and tighten one setscrew on bearing.
11. Rotate the shaft to allow the bearing outer ring to find its center of free movement.
12. Tighten hold-down bolts to proper torque. Refer to *Recommended Torque* chart.
13. Re-install the pulley and adjust the belt tension. For arrangement 8, reinstall the shaft coupling per the coupling manufacturer's instructions. Ensure the shafts are properly aligned using laser alignment equipment prior to starting the fan. Refer to the coupling manufacturer's documentation for alignment instructions and tolerances.
14. Test run and retighten all setscrews and bolts; trim balance as necessary (.0785 in/sec max.).

After 24 hours of operation, retighten the setscrews to the appropriate torque. This assures full locking of the inner race to the shaft. Make sure the socket key or driver is in good condition with no rounded corners. The key should be fully engaged in the setscrew and held squarely to prevent rounding out of the setscrew socket when applying maximum torque.

Troubleshooting

Problem and Potential Cause
Low Capacity or Pressure: • Incorrect direction of rotation. Make sure the fan rotates in same direction as the arrows on the motor or belt drive assembly • Poor fan inlet conditions. There should be a straight clear duct at the inlet • Improper wheel alignment
Excessive Vibration and Noise: • Damaged or unbalanced wheel • Belts too loose; worn or oily belts • Speed too high • Incorrect direction of rotation. Make sure the fan rotates in same direction as the arrows on the motor or belt drive assembly • Bearings need lubrication or replacement • Fan surge or incorrect inlet or outlet conditions • For direct drive, make sure hub setscrew, if available, is tightened down on motor shaft or on key. For direct drive units with bushing, the hub setscrew, if available, needs to go through the bushing and then tightened down on the motor shaft or on key.
Overheated Motor: • Motor improperly wired • Incorrect direction of rotation. Make sure the fan rotates in same direction as the arrows on the motor or belt drive assembly • Cooling air diverted or blocked • Improper inlet clearance • Incorrect fan RPMs • Incorrect voltage
Overheated Bearings: • Improper bearing lubrication • Excessive belt tension

Parts List

CA,CF SWSI Arrangement 1

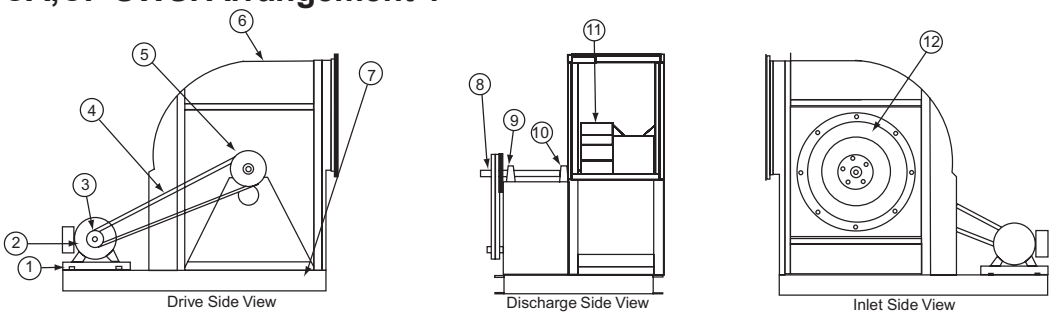

CA, CF SWSI Arrangement 3

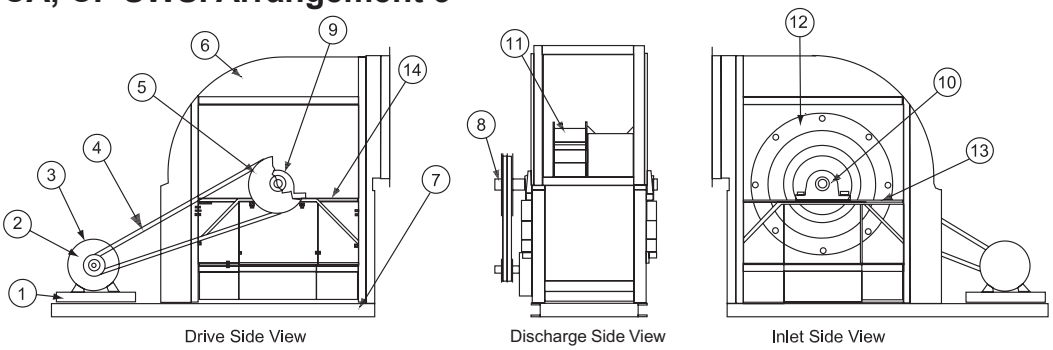

CA, CF SWSI Arrangement 8

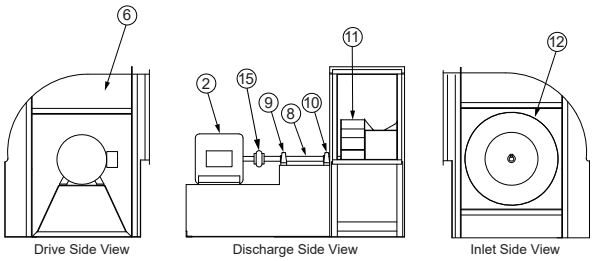

CA, CF SWSI Arrangement 9

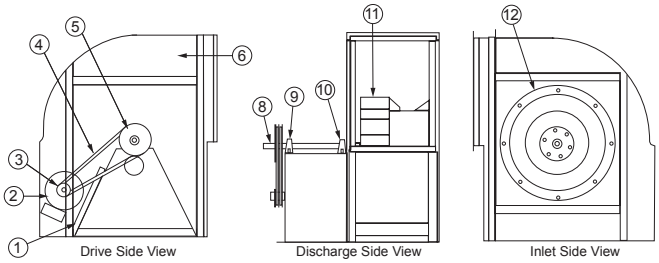

Part No.	Arr. 1	Arr. 3	Arr. 8	Arr. 9
1	Motor Slide Base		-	Motor Slide Base
2	Motor			
3	Motor Sheave		-	Motor Sheave
4	Belt Set		-	Belt Set
5	Fan Sheave		-	Fan Sheave
6	Housing			
7	Isolation Base (optional)		-	
8	Shaft			
9	Outboard Bearing	Drive Side Bearing	Outboard Bearing	
10	Inboard Bearing	Free Side Bearing	Inboard Bearing	
11	Wheel			
12	Inlet Cone			
13	-	Free Side Bearing Support	-	-
14	-	Drive Side Bearing Support	-	-
15	-		Coupling	-

CA, CF SWSI Arrangement 10

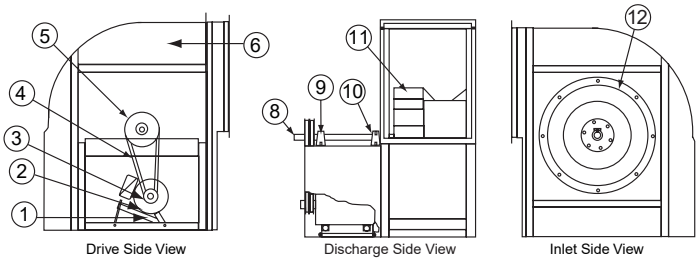

CA, CF SWSI Arrangement 4

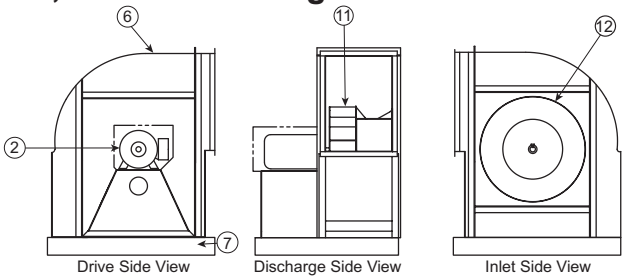

CA-4 SWSI, CF-4 SWSI

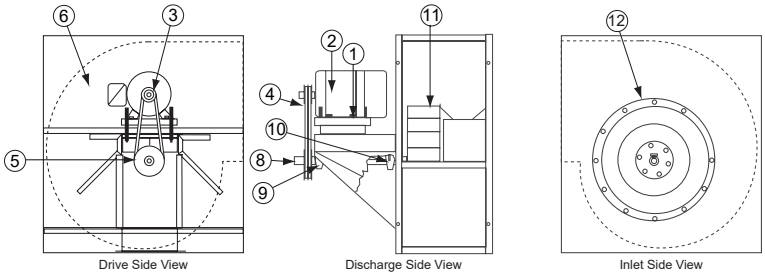

Part No.	Arr. 10, CA-4 SWSI, CF-4 SWSI	Arr. 4
1	Motor Plate	-
2	Motor	
3	Motor Sheave	-
4	Belt Set	-
5	Fan Sheave	-
6	Housing	
7	-	Isolation Base (optional)
8	Shaft	-
9	Outboard Bearing	-
10	Inboard Bearing	-
11	Wheel	
12	Inlet Cone	

CA DWDI

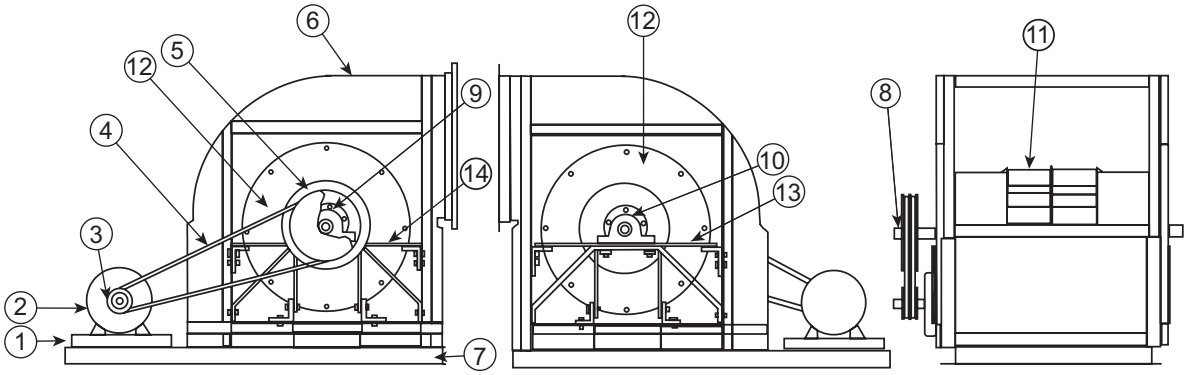

Drive Side View Free Side View Discharge Side View

CA-4 DWDI

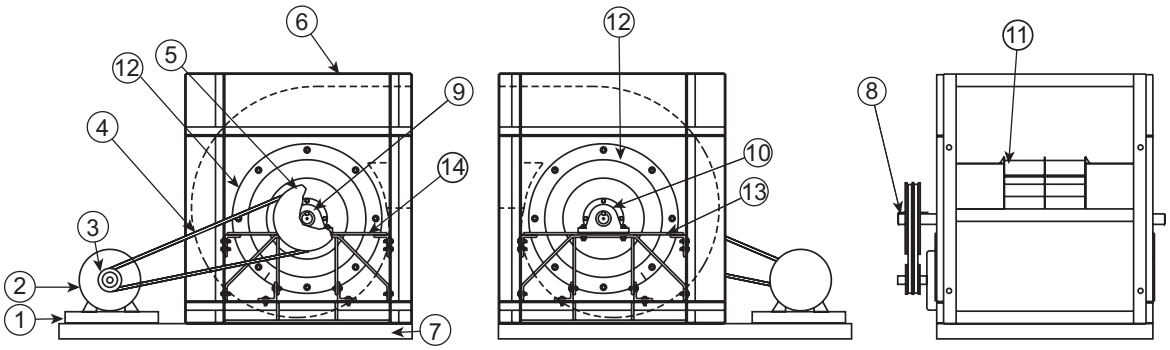

Drive Side View Free Side View Discharge Side View

CAF-DWDI

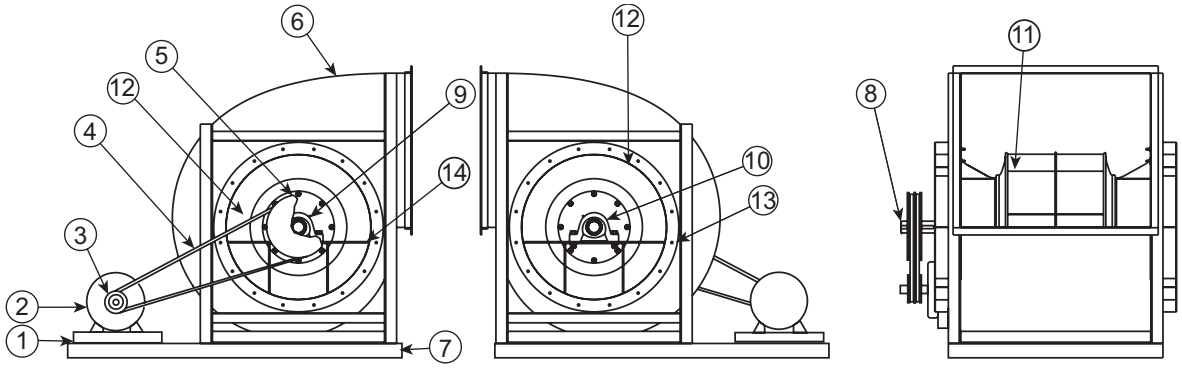

Drive Side View Free Side View Discharge Side View

Part No.	CA DWDI	CAF-DW	CA-4 DWDI
1	Motor Slide Base		
2	Motor		
3	Motor Sheave		
4	Belt Set		
5	Fan Sheave		
6	Housing		
7	Isolation Base (optional)		
8	Shaft		
9	Drive Side Bearing		
10	Free Side Bearing		
11	Wheel/Wheel Assembly		
12	Inlet Cone		
13	Free Side Bearing Support		
14	Drive Side Bearing Support		

CPFB

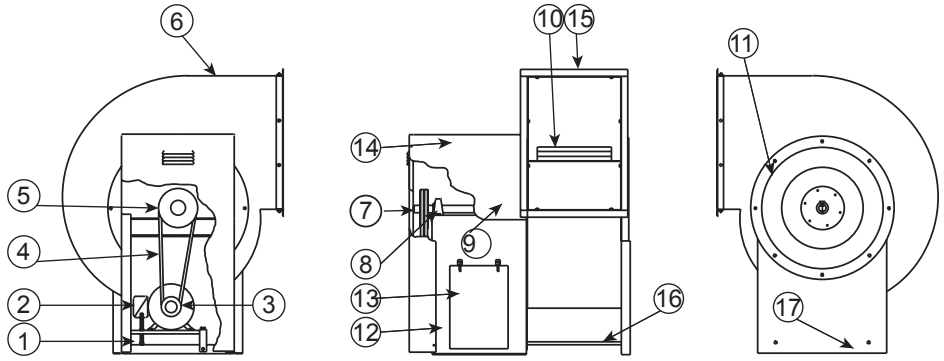

Drive Side View Discharge Side View Inlet Side View

Part No.	CPFB, CPA, CPA-A, CPS, CPS-A, CPV Arr. 4
1	Motor Plate
2	Motor
3	Motor Sheave
4	Belt Set
5	Fan Sheave
6	Housing
7	Shaft
8	Outboard Bearing
9	Inboard Bearing
10	Wheel
11	Inlet Cone
12	Pedestal
13	Optional Side Cover (2)
14	Optional Weather Cover
15	Discharge Flange
16	Spreader Bar (2)
17	Inlet Side Support

CPA, CPA-A, CPS, CPS-A CPV

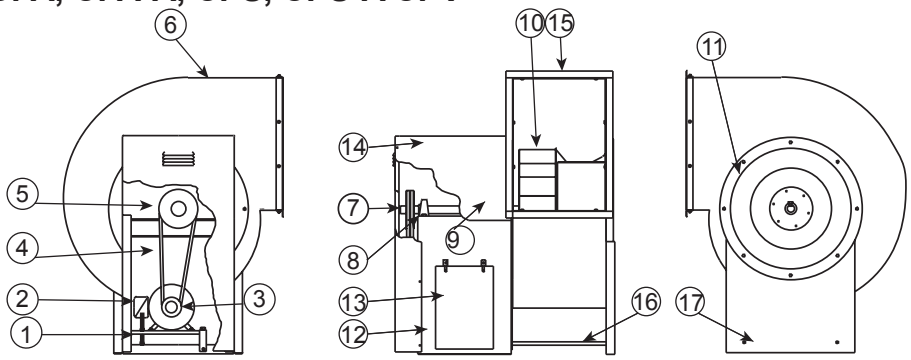

Drive Side View Discharge Side View Inlet Side View

CPA, CPA-A, CPS, CPS-A, CPV with Original Curb Cap and Inlet Box Accessory

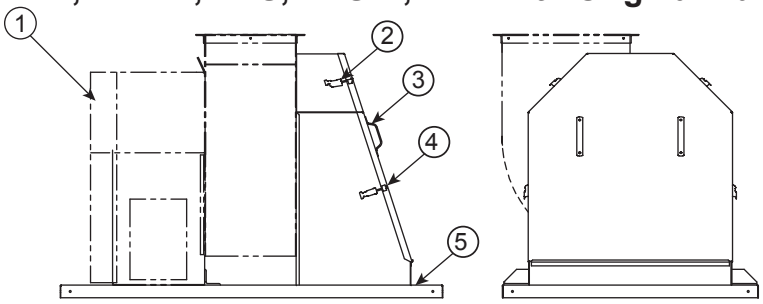

Side View Inlet Side View

Part No.	CPA, CPA-A, CPS, CPS-A, CPV with Optional Curb Cap and Inlet Box Accessory Parts List
1	CP Vent Set
2	Adjustable Draw Latch
3	Access Door Assembly
4	Latch Keeper
5	Curb Cap/Plenum Box Assembly
6	Foam Tape (not shown)

CPFD

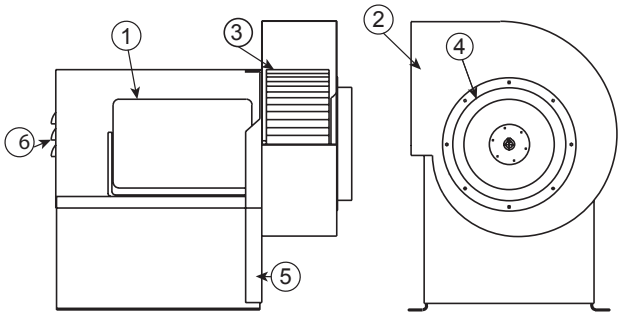

Discharge Side View Inlet Side View

Part No.	CPFD	CPA, CPA-A, CPS, CPS-A, CPV Arr 4 & CPV-EC
1	Motor	
2	Housing	
3	Wheel	
4	Inlet Cone	
5	Pedestal	
6	Optional Weather Cover	
7	-	Discharge Flange
8	-	Inlet Side Support

CPA, CPA-A, CPS, CPS-A CPV Arrangement 4

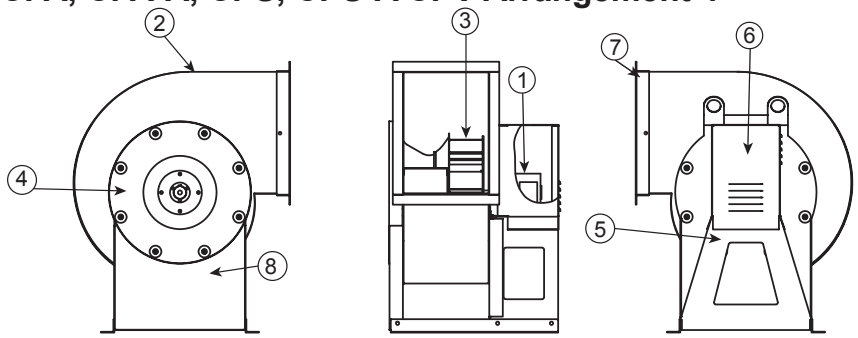

Inlet Side View Discharge Side View Drive Side View

CPV-EC

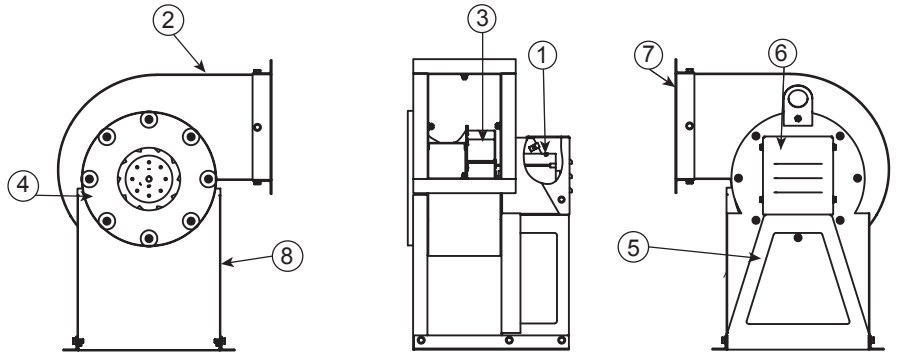

Inlet Side View Discharge Side View Drive Side View

Limited Warranty

Loren Cook Company warrants that your Loren Cook fan was manufactured free of defects in materials and workmanship, to the extent stated herein. For a period of one (1) year after date of shipment, we will replace any parts found to be defective without charge, except for shipping costs which will be paid by you. This warranty is granted only to the original purchaser placing the fan in service. This warranty is void if the fan or any part thereof has been altered or modified from its original design or has been abused, misused, damaged or is in worn condition or if the fan has been used other than for the uses described in the company manual. This warranty does not cover defects resulting from normal wear and tear. To make a warranty claim, notify Loren Cook Company, General Offices, 2015 East Dale Street, Springfield, Missouri 65803-4637, explaining in writing, in detail, your complaint and referring to the specific model and serial numbers of your fan. Upon receipt by Loren Cook Company of your written complaint, you will be notified, within thirty (30) days of our receipt of your complaint, in writing, as to the manner in which your claim will be handled. If you are entitled to warranty relief, a warranty adjustment will be completed within sixty (60) business days of the receipt of your written complaint by Loren Cook Company. This warranty gives only the original purchaser placing the fan in service specifically the right. You may have other legal rights which vary from state to state. For fans provided with motors, the motor manufacturer warrants motors for a designated period stated in the manufacturer's warranty. Warranty periods vary from manufacturer to manufacturer. Should motors furnished by Loren Cook Company prove defective during the designated period, they should be returned to the nearest authorized motor service station. Loren Cook Company will not be responsible for any removal or installation costs.

LOREN COOK COMPANY

Corporate Offices: 2015 E. Dale St. Springfield, MO 65803

Phone 417-869-6474 | Fax 417-862-3820 | lorencook.com